ALTERNATIVE TRANSPORTATION FUELS: AN OVERVIEW

HEARING

BEFORE THE

SUBCOMMITTEE ON ENERGY AND AIR QUALITY

OF THE

COMMITTEE ON ENERGY AND COMMERCE
HOUSE OF REPRESENTATIVES

ONE HUNDRED TENTH CONGRESS

FIRST SESSION

APRIL 18, 2007

Serial No. 110–31

Printed for the use of the Committee on Energy and Commerce
energycommerce.house.gov

U.S. GOVERNMENT PRINTING OFFICE

40–203 PDF WASHINGTON : 2008

For sale by the Superintendent of Documents, U.S. Government Printing Office
Internet: bookstore.gpo.gov Phone: toll free (866) 512–1800; DC area (202) 512–1800
Fax: (202) 512–2104 Mail: Stop IDCC, Washington, DC 20402–0001

COMMITTEE ON ENERGY AND COMMERCE

JOHN D. DINGELL, Michigan, *Chairman*

HENRY A. WAXMAN, California
EDWARD J. MARKEY, Massachusetts
RICK BOUCHER, Virginia
EDOLPHUS TOWNS, New York
FRANK PALLONE, JR., New Jersey
BART GORDON, Tennessee
BOBBY L. RUSH, Illinois
ANNA G. ESHOO, California
BART STUPAK, Michigan
ELIOT L. ENGEL, New York
ALBERT R. WYNN, Maryland
GENE GREEN, Texas
DIANA DEGETTE, Colorado
Vice Chairman
LOIS CAPPS, California
MIKE DOYLE, Pennsylvania
JANE HARMAN, California
TOM ALLEN, Maine
JAN SCHAKOWSKY, Illinois
HILDA L. SOLIS, California
CHARLES A. GONZALEZ, Texas
JAY INSLEE, Washington
TAMMY BALDWIN, Wisconsin
MIKE ROSS, Arkansas
DARLENE HOOLEY, Oregon
ANTHONY D. WEINER, New York
JIM MATHESON, Utah
G.K. BUTTERFIELD, North Carolina
CHARLIE MELANCON, Louisiana
JOHN BARROW, Georgia
BARON P. HILL, Indiana

JOE BARTON, Texas
Ranking Member
RALPH M. HALL, Texas
J. DENNIS HASTERT, Illinois
FRED UPTON, Michigan
CLIFF STEARNS, Florida
NATHAN DEAL, Georgia
ED WHITFIELD, Kentucky
BARBARA CUBIN, Wyoming
JOHN SHIMKUS, Illinois
HEATHER WILSON, New Mexico
JOHN B. SHADEGG, Arizona
CHARLES W. "CHIP" PICKERING, Mississippi
VITO FOSSELLA, New York
STEVE BUYER, Indiana
GEORGE RADANOVICH, California
JOSEPH R. PITTS, Pennsylvania
MARY BONO, California
GREG WALDEN, Oregon
LEE TERRY, Nebraska
MIKE FERGUSON, New Jersey
MIKE ROGERS, Michigan
SUE WILKINS MYRICK, North Carolina
JOHN SULLIVAN, Oklahoma
TIM MURPHY, Pennsylvania
MICHAEL C. BURGESS, Texas
MARSHA BLACKBURN, Tennessee

PROFESSIONAL STAFF

DENNIS B. FITZGIBBONS, *Chief of Staff*
GREGG A. ROTHSCHILD, *Chief Counsel*
SHARON E. DAVIS, *Chief Clerk*
BUD ALBRIGHT, *Minority Staff Director*

Subcommittee on Energy and Air Quality

RICK BOUCHER, Virginia, *Chairman*

G.K. BUTTERFIELD, North Carolina, *Vice Chairman*
CHARLIE MELANCON, Louisiana
JOHN BARROW, Georgia
HENRY A. WAXMAN, California
EDWARD J. MARKEY, Massachusetts
ALBERT R. WYNN, Maryland
MIKE DOYLE, Pennsylvania
JANE HARMAN, California
TOM ALLEN, Maine
CHARLES A. GONZALEZ, Texas
JAY INSLEE, Washington
TAMMY BALDWIN, Wisconsin
MIKE ROSS, Arkansas
DARLENE HOOLEY, Oregon
ANTHONY D. WEINER, New York
JIM MATHESON, Utah
JOHN D. DINGELL, Michigan *(ex officio)*

J. DENNIS HASTERT, Illinois, *Ranking Member*
RALPH M. HALL, Texas
FRED UPTON, Michigan
ED WHITFIELD, Kentucky
JOHN SHIMKUS, Illinois
JOHN B. SHADEGG, Arizona
CHARLES W. "CHIP" PICKERING, Mississippi
STEVE BUYER, Indiana
MARY BONO, California
GREG WALDEN, Oregon
MIKE ROGERS, Michigan
SUE WILKINS MYRICK, North Carolina
JOHN SULLIVAN, Oklahoma
MICHAEL C. BURGESS, Texas
JOE BARTON, Texas *(ex officio)*

Professional Staff

Sue D. Sheridan, *Chief Counsel*
Lorie J. Schmidt, *Counsel*
Bruce C. Harris, *Policy Advisor*
David J. McCarthy, *Minority Counsel*

CONTENTS

	Page
Hon. Rick Boucher, a Representative in Congress from the Commonwealth of Virginia, opening statement	1
Hon. J. Dennis Hastert, a Representative in Congress from the State of Illinois, opening statement	3
Hon. G.K. Butterfield, a Representative in Congress from the State of North Carolina, opening statement	4
Hon. John Shimkus, a Representative in Congress from the State of Illinois, opening statement	5
Hon. John D. Dingell, a Representative in Congress from the State of Michigan, opening statement	6
Hon. Charles W. "Chip" Pickering, a Representative in Congress from the State of Mississippi, opening statement	6
Hon. Jane Harman, a Representative in Congress from the State of California, opening statement	7
Hon. Joe Barton, a Representative in Congress from the State of Texas, prepared statement	9
Hon. Jay Inslee, a Representative in Congress from the State of Washington, opening statement	13
Submitted material	15
Hon. Michael C. Burgess, a Representative in Congress from the State of Texas, opening statement	18
Hon. Darlene Hooley, a Representative in Congress from the State of Oregon, opening statement	18

WITNESSES

John Ward, vice president, Headwaters Incorporated	19
Prepared statement	22
Donald W. Maley, Jr., vice president, Leucadia International Corporation	33
Prepared statement	35
Brian Foody, chief executive officer, Iogen Corporation	49
Prepared statement	51
Scott Hughes, director, government affairs, National Biodiesel Board	57
Prepared statement	60
Phil Lampert, executive director, National Ethanol Vehicle Coalition	65
Prepared statement	67
Alexander E. Farrell, assistant professor of energy and resources, and director, Transportation Sustainability Research Center	72
Prepared statement	75

ALTERNATIVE TRANSPORTATION FUELS: AN OVERVIEW

WEDNESDAY, APRIL 18, 2007

HOUSE OF REPRESENTATIVES,
SUBCOMMITTEE ON ENERGY
AND AIR QUALITY,
COMMITTEE ON ENERGY AND COMMERCE,
Washington, DC.

The subcommittee met, pursuant to call, at 10:15 a.m., in room 2123 of the Rayburn House Office Building, Hon. Rick Boucher (chairman) presiding.

Members present: Representatives Butterfield, Barrow, Waxman, Wynn, Doyle, Harman, Gonzalez, Inslee, Baldwin, Ross, Hooley, Matheson, Dingell, Hastert, Hall, Upton, Shimkus, Shadegg, Pickering, Burgess and Barton.

Staff present: Bruce Harris, Lorie Schmidt, Laura Vaught, Chris Treanor, Margaret Horn, David McCarthy, Tom Hossenbochler, and Peter Kielty.

OPENING STATEMENT OF HON. RICK BOUCHER, A REPRESENTATIVE IN CONGRESS FROM THE COMMONWEALTH OF VIRGINIA

Mr. BOUCHER. The subcommittee will come to order.

This morning we begin a series of hearings on ways to achieve a higher degree of American energy self-reliance. Our goal is to make a legislative contribution to the Independence Day measures which the Speaker has announced that the House will consider in the mid-summer time frame. This committee's contribution to that effort will consist of legislation to encourage domestic alternatives to petroleum for transportation fuels and energy efficiency and conservation measures that will reduce energy consumption.

Until today, the subcommittee has been focused exclusively on a U.S. response to the challenge of climate change. I would underscore again this morning that we will propose a mandatory control program for greenhouse gas emissions and later this year report that measure for consideration by the House during the fall time frame. The climate change control program will not be a part of the mid-summer energy independence agenda. Instead, climate change legislation will be taken up during the period September-October this year, taken up on the floor during that period.

Today, as we begin our focus on this committee's contribution to energy independence, we examine transportation fuels and ways to develop domestic alternatives. Later hearings in this series will focus on energy efficiency and conservation.

Our Nation has an unhealthy reliance on petroleum, 60 percent of which is imported from other countries and much of that importation comes from some of the least politically stable places in the world. In my view, our need to protect the flow of petroleum ties our hands diplomatically and makes it difficult for the United States to assert its larger national interests in a broad range of international policies. Our reliance on oil imports involves us in conflicts that we would be better served to avoid. And so both for our economic security and for our national security, we must exert maximum effort to develop domestic alternatives to petroleum for powering transportation.

Over the long term, we can anticipate that more of transportation will be electrically powered through fuel cells and through plug-in hybrids. In the near term, ethanol, both in the corn-based and cellulosic varieties, holds great promise. The future use of biodiesel also holds promise. This morning we will examine this role this committee can play in advancing those promising alternatives.

We will also focus this morning on another promising alternative. In the coming days, I will join with our Illinois colleague, Mr. Shimkus, and other interested members of this subcommittee, our full committee and the House in introducing legislation to promote the launch of a domestic industry to produce a liquid fuel derived from coal. Since the days of World War II, coal-to-liquid processes have been in use. Today South Africa derives a substantial portion of its transportation fuels from coal. The technology to convert coal to a liquid fuel is well understood and the process is commercially feasible when the world price of oil is at $40 per barrel or higher. While today's process is well above $40, there is hesitation in the investor community about the long-term outlook for oil prices. A large portion of today's oil price is political risk. The resolution of diplomatic differences in the Middle East, for example, could lend greater assurance to the future export of oil to the world market and create downward pressure on the world price of oil. This uncertainty about future oil prices has inhibited the investment of private capital in coal-to-liquids facilities in the United States. Legislation which Mr. Shimkus and I will introduce will serve to bolster investor confidence and pave the way for the launch of a U.S.-based coal-to-liquids industry.

I want to thank Mr. Shimkus for his partnership with me on this measure, which is an important step in our effort to achieve a higher degree of energy self-reliance.

This morning we will welcome testimony from our witnesses on the future of ethanol, coal-to-liquids and biodiesel, and suggestions for the role of Government policy in order to advance each. President Bush announced, in his State of the Union address, a goal of consumption in this Nation of 35 billion gallons of alternative fuel per year by the year 2020. Today we consume approximately 5½ billion gallons of ethanol and so the President's goal is ambitious but in my view, it needs to be achieved. Each of the approaches we will examine this morning can help us to achieve it.

So I want to say welcome to our witnesses. Thank you for joining us and sharing your views. We will hear from you shortly.

Now it is my privilege to recognize the ranking Republican member of our subcommittee, the gentleman from Illinois, Mr. Hastert.

OPENING STATEMENT OF HON. J. DENNIS HASTERT, A REPRESENTATIVE IN CONGRESS FROM THE STATE OF ILLINOIS

Mr. HASTERT. Thank you, Chairman Boucher, for holding this important hearing on the future of alternative transportation fuels.

Let me begin by expressing my condolences to the families and students of Virginia Tech. That university has certainly suffered. My thoughts and prayers are with those victims, the families and all your constituents. Mr. Chairman, I know you will find the strength and your folks will find the strength as a community to cope with this horrific event.

I would like to thank again each of these witnesses today for being here to share their thoughts and insights and increasing our Nation's use of alternative transportation fuels. I have always believed good energy policy is good environmental policy and that the reverse is also true. Good environmental policy should be good energy policy. Increasing the use of alternative transportation fuels accomplishes just that. It provides our Nation with greater energy independence while at the same time offering a positive environmental impact.

The key to our future energy security is technological innovation and commercial deployment. Take coal, for example. There is more coal underneath Gillette, WY, or southern Illinois or western Virginia or southern Indiana than anywhere in Iran or Saudi Arabia but that energy happens to be coal. With the abundance of coal in this country, we need to continue to push the development and deployment of coal-to-liquid technology. And although CTL technology is not new, there are still uncertainties regarding its economic viability. Most of the uncertainty centers on the fact that the U.S. has not built a large-scale commercial CTL facility. It is my belief, however, that we can solve this problem and prove the long-term viability of this fuel.

As many of you know, the Air Force is currently testing the use of CTL fuels in their planes. So far these tests have been successful. Congress should step forward now and allow the Defense Department to enter into a long-term agreement to purchase CTL fuel. Such an agreement will provide the economic certainty needed to draw investment into CTL facilities. As these facilities are built, economies of scale will then work to lower the cost of the fuel and make it available for others to use in commercial aircraft, trains and passenger cars. For the long-term security of America, I would much rather worry about who is the next mayor of Gillette, WY, instead of who is the next ruler of Iran. Imagine the benefits of being able to rely on millions of barrels of clean diesel produced right here at home to meet our transportation needs rather than oil from an unreliable foreign source.

Like coal, America has an abundant source of renewable clean bio-based fuels like ethanol and soy diesel. In the past few years we have made tremendous strides in the use of these fuels yet we can still do more. In order to make ethanol a larger part of our fuel mix, we need to continue research into increasing the yield of ethanol from corn, push the development of cellulosic sources of ethanol and get the infrastructure in place to make the ethanol more widely available. America already has the energy resources it needs for its future energy security. It is in every cornfield in Illinois and

every coal mine in Virginia. The question becomes whether we do what is necessary in the form of policy to provide the means to make these sources more widely available and economically viable.

In the long run, Mr. Chairman, energy security is national security. Loan guarantees, long-term purchase agreements, investments in research and other incentives to increase the sources of domestically produced alternative fuels gives America an opportunity to claim our energy independence back from the unstable foreign sources we have become so reliant upon. It refocuses our priorities on cleaner, safer, less-expensive sources of energy and puts us on the path of energy independence.

Thank you, and I yield back the balance of my time.

Mr. BOUCHER. Thank you very much, Mr. Hastert, and I particularly appreciate your expression of condolence for the loss that we experienced earlier this week.

I have to go to the floor in order to take part in the passage of a resolution about that very subject and I am going to ask the vice chairman of our subcommittee, the gentleman from North Carolina, Mr. Butterfield, to assume the chair and he actually will be giving the next opening statement and can begin by recognizing himself.

OPENING STATEMENT OF HON. G.K. BUTTERFIELD, A REPRESENTATIVE IN CONGRESS FROM THE STATE OF NORTH CAROLINA

Mr. BUTTERFIELD [presiding]. Thank you very much, Chairman Boucher, and we wish you well as you go to the floor to pay tribute to those lives that were lost in the State of Virginia.

I too want to thank the chairman of this committee for convening this important hearing today. It is absolutely critical that we begin this discussion and debate. We cannot afford to delay it any longer.

I want to thank the witnesses for coming forward today. I have looked at each one of your bios and each of you brings a credential to this committee that is very important. We are committed on this committee to develop bipartisan legislation that will put us on the path to energy independence and to do it within the foreseeable future and so I want to thank you for your testimonies. I look forward to what you have to say. We as a government cannot do this alone. We are going to need the participation of the energy sector to resolve this problem. Certainly we are going to do our part in making the resources available and developing the policy that needs to be developed but we are going to have to depend on each one of you to help us in this process, and so thank you very much for coming.

The American people are beginning to pay attention to this issue. We in this country are 5 percent of the world yet we consume 25 percent of the energy, and in the transportation sector, 28 percent of transportation fuels are being used or devoted to transportation fuels and we must reduce this figure and we must do it significantly, so thank you very much for coming.

We are now going to have opening statements from some of the other members. At this time the chair recognizes Mr. Upton, the gentleman from Michigan.

Mr. UPTON. I am going to defer and claim the 3 minutes later. Thank you, Mr. Chairman.

Mr. BUTTERFIELD. The gentleman defers.

Mr. Shimkus, and as the chairman mentioned a moment ago, you are going to see legislation introduced any day now, the Boucher-Shimkus Act. Is that what we call it?

Mr. SHIMKUS. I hope we get you as an original cosponsor.

Mr. BUTTERFIELD. I look forward to joining with you. The gentleman is recognized.

OPENING STATEMENT OF HON. JOHN SHIMKUS, A REPRESENTATIVE IN CONGRESS FROM THE STATE OF ILLINOIS

Mr. SHIMKUS. Thank you. I hesitate to do an opening statement, but when I read the committee briefing, the full committee briefing, it really reminded me about how we can as legislators affect public policy in a very important way. If you believe that we are over-reliant on imported crude oil, you don't have to go back very far in history to see some successes. The 1992 Clean Air Act really was a segue for ethanol to get its foot in the door. I wasn't here then. But I was here in 1997–98 and I think it was 1998 that I joined with Karen McCarthy, Democrat from this committee, and we were successful in changing EPACT to include biodiesel as a credible item for fuel mix, which really changed the dynamics of that industry and I think have got a long way to go to catch up with the success we have done in the ethanol area but it is a great product that we should take great credit. And I wanted to remember Karen in this debate because that was one that President Clinton signed. I remember walking over to the Senate floor with Karen to lobby an Arkansas Senator to let the bill move and so that was a success, and I hope that in this world environment when we are really frustrated with our reliance on imported crude oil that we can use the same type of work that we have in other past pieces of legislation and really help make another dent in our reliance on imported crude oil, and that is why I am honored to be working with the chairman of the subcommittee who everyone acknowledges is an expert in the field, a diligent legislator and a good friend. As we move that legislation, we do hope that people will get a good look at it and that we work with them to help perfect it to a point where we can move it expeditiously to the floor.

I am a supply guy, and the more supply you have, the lower the cost, and we are just tired of being held hostage by the international community, especially areas of the world. I am a big democracy freedom guy. I talked at a class last night and I said, if we are going to be all over the world to fight for democracy, freedom and the global war on terror, let us let it be about that issue, and let us not have another side debate, well, we are really there for oil, and you all can help us get there. I look forward to your testimony.

Mr. Chairman, I yield back my time.

Mr. BUTTERFIELD. The gentleman yields back.

At this time the chair is pleased to recognize the chairman of the full committee, my friend from the State of Michigan, Mr. Dingell.

OPENING STATEMENT OF HON. JOHN D. DINGELL, A REPRESENTATIVE IN CONGRESS FROM THE STATE OF MICHIGAN

Chairman DINGELL. Mr. Chairman, I thank you for your courtesy and I commend you for holding this important hearing.

Today the committee will turn its attention to alternative transportation fuels, a topic that has frequently been at the center of the committee's work on energy issues. Our country's dependence on foreign sources of energy is a well-known deficiency in our energy policy and has been so for decades. According to the Energy Information Agency, EIA, in 2005 the U.S. consumed approximately 20 million barrels of crude oil per day, 60 percent of which was imported. Alternatives to petroleum-based transportation fuel are a critical component of enhancing our Nation's energy security.

This committee advanced the cause of alternative fuels in the Energy Policy Act of 2005 by creating the renewable fuel program which required that a certain percentage of our retail gasoline supply be comprised of renewable fuel. By most assessments, that program has been a success. For 2006, the program required gasoline supply to contain a minimum of 4 billion gallons of renewable fuel. Thanks to the productivity of American agriculture and the ingenuity of the entrepreneurs who joined this emerging market, the number of gallons actually produced in 2006 was 5 billion gallons. Most analysts agree that we will meet the 2012 requirement for 7.5 billion gallons much sooner than required by law. All this is good news. The question now becomes what else should we do to encourage the use of alternative fuels. I note the vast majority of ethanol produced in the country is derived from corn kernels but there are other feedstocks that can play an important part in ethanol production such as cellulose. In addition, there are other alternative fuels that we should examine to see what role they can play in our fuel mix including biodiesel and liquids fuels derived from coal. We have witnesses here today who can speak to these issues. Another witness will examine the various impacts of alternative fuels on climate change, a critical perspective given this committee's focus on climate policy, and I look forward to their testimony.

There are other issues that I hope the subcommittee will continue to examine in future hearings. We must find ways to increase biofuels infrastructure so that more than 6 million consumers who already own flexible-fuel vehicles can actually purchase the alternative fuel and that the alternative fuel is available in the marketplace. We must also continue to examine ways to increase the number of flexible-fuel vehicles. Any action on these issues must also account for how they can affect our broader efforts to address climate change and enhance energy security.

I want to thank you again, Mr. Chairman, and I look forward to the testimony of our witnesses, whom I welcome at this time.

Thank you. I yield back the balance of my time.

Mr. BUTTERFIELD. Thank you very much, Mr. Chairman, and the gentleman yields back.

At this time the chair recognizes Mr. Pickering from Mississippi.

OPENING STATEMENT OF HON. CHARLES W. "CHIP" PICKERING, A REPRESENTATIVE IN CONGRESS FROM THE STATE OF MISSISSIPPI

Mr. PICKERING. Mr. Chairman, I thank you for this hearing and I look forward to the testimony of the panel.

This is a critical issue of gaining energy independence and security and enhanced supply. In my home State of Mississippi, we are doing everything from ethanol to clean coal to nuclear to traditional fuels to animal waste, to fish waste, poultry waste, wood waste. Mississippi State has the leading patent on converting wastewater, sewage, into a biofuel. This is an exciting time for us to have a transformation of energy in the country that powers the way our country runs, our homes, our lives, and I think that this is a good time to find common ground and consensus on both sides of the aisle to achieve a very important security and economic objective for the country.

Thank you, Mr. Chairman.

Mr. BUTTERFIELD. Thank you.

At this time the chair recognizes the gentlelady from California, Ms. Harman.

OPENING STATEMENT OF HON. JANE HARMAN, A REPRESENTATIVE IN CONGRESS FROM THE STATE OF CALIFORNIA

Ms. HARMAN. Thank you, Mr. Chairman, and good morning to our witnesses. The tragedy at Virginia Tech shows us just how fragile we are, a campus in a peaceful part of the country could all of a sudden be the site of a violent massacre.

The subjects we are addressing today may not be as sudden but surely they show us too how fragile we are, and it is our responsibility, and I hope we will rise to it on a bipartisan basis to do something about it. I drive hybrid vehicles on both coasts and I applaud the breakthroughs the auto industry has made in recent years, many of them actually developed at Toyota and Honda facilities in my district.

As my colleagues have pointed out, transportation in the age of global warming and in the age of terrorism requires a wholly new approach to how we power our cars and trucks. The automakers can give us the engines but the fuel producers must meet them halfway. Bringing alternative fuels to market depends on fuel production and fuel infrastructure. Without more ethanol pumping stations—presently there are only about 1,100, mostly located in a handful of midwestern States—we cannot expect to see more flex-fuel vehicles on the road. Manufacturers won't make them and the public won't buy them.

We should also explore synergies between transportation fuels and other clean energy initiatives. In Carson, California, just outside my district, BP and GE are building a carbon capture and sequestration coal power plant that can also produce hydrogen. Plants like these can produce raw materials for hydrogen fuel cell vehicles and lay the groundwork for their commercialization years from now. This kind of creative thinking should color our policymaking. I look forward in the near future to driving my granddaughter Lucy around in a vehicle fueled with cellulosic ethanol

and other alternative fuels. I hope that by the time she is old enough to drive herself, the alternative will be the mainstream.

I yield back.

Mr. BUTTERFIELD. Thank you.

I understand that we have been joined by the ranking member of this committee, the distinguished gentleman from Texas, Mr. Barton.

Mr. BARTON. Thank you, Mr. Chairman. I will put my statement in the record and pass.

I do want to extend my prayers with everybody else's for Congressman Boucher and his constituents at Virginia Tech.

I yield back.

[The prepared statement of Hon. Joe Barton follows:]

Statement of the Honorable Joe Barton
Ranking Member, Energy and Commerce Committee
Alternative Transportation Fuels: An Overview
Wednesday, April 18th, 2007

Thank you, Chairman Boucher, for scheduling this hearing to survey alternative fuels from domestic sources.

Before we begin discussing individual alternative fuels and technologies, we should stop and ask a reasonable question: what are our ultimate goals? For me, the primary goal is energy security. By that I mean weaning America off unstable, foreign sources of energy, particularly in the transportation sector.

DOE was created nearly 30 years ago to make America secure in its sources of energy, but that hasn't worked out very well. Our reliance on foreign oil has increased, and the worries about unstable sources are as intense now as anytime other than the oil embargoes and gas lines of two decades ago.

Of course, more domestic production is badly needed. For example, if we develop more domestic natural gas, and build more nongas-fired

electricity generation, we could talk about compressing natural gas to power trucks, buses, and even cars. This could turn out to be a competitive and environmentally friendly alternative to foreign oil and we should not rule it out.

But we also need to look at alternatives to oil and gas. The United States is the Saudi Arabia of coal, and we will hear witnesses today on the benefits and challenges of producing liquid transportation fuel from coal. If this can be accomplished economically, we could displace barrels of unstable foreign oil with barrels of home produced fuel from coal.

American fighter jets could be fueled by American coal instead of Nigerian oil. That's not just good for energy security, it's good for our national security.

Diversity could also involve scientific breakthroughs in biofuel. We are already seeing ethanol from corn approaching the limit of its practical, economic contribution to U.S. energy security. As corn prices rise, and acres are diverted from food and feed production to energy production it becomes increasingly obvious that we need to reach the next generation.

Making cellulosic ethanol economical has tremendous appeal. Feedstocks come from most states in the Union. And some cellulosic feedstocks require little water, no plowing and their use won't raise the price of food.

Acreage that today is non-productive could one day yield the energy for cars, trucks, and airplanes. And this source scores as a significant reduction in CO2 emissions. Wll that day come in five, ten, or fifty years? Perhaps some of our witnesses will shed some light here.

We began many of these efforts in the Energy Policy Act of 2005. For example, just last week EPA finalized its rulemaking for the renewable fuels standard authorized in EPAct. This process involved refiners, renewable producers, distributors and marketers, agricultural interests, and environmentalists.

Mr. Chairman, as we consider follow-on legislation, I think weshould avoid anointing winners and losers in the alternative fuels debate. As demand for alternative fuels grows, let's not rule out any--coal-to-liquids,

compressed natural gas, or next generation technologies that use fungible commodities that work in existing infrastructure.

I look forward to future hearings that will further explore these issues. I am eager to work with you, Mr. Chairman, in a bipartisan fashion on proposals that makes sense economically, and help to reduce our nation's dependence on foreign sources of energy.

Mr. BUTTERFIELD. I thank the gentleman for his comments.

At this time the chair recognizes the gentleman from the State of Washington, Mr. Inslee.

OPENING STATEMENT OF HON. JAY INSLEE, A REPRESENTATIVE IN CONGRESS FROM THE STATE OF WASHINGTON

Mr. INSLEE. Thank you. I just hope that we look at these hearings with a sense of great optimism. I think it is warranted. The technological advances are truly remarkable and we are going to be able to skin this cat of global warming, I believe, with the technologies, some of which we will hear about today.

I think I am the first Congressman to drive on the Hill a plug-in hybrid 2 weeks ago. You get 150 miles per gallon on the gasoline and have electricity for the first 40 miles at a penny a mile, and that will be commercially available this fall from A–123 Battery Company, and of course, GM has plans several years from now. There are just tremendous things going on. But the one caution I want to note is that all men are created equal but not all fuels are created equal, and right now we have a renewable fuels standard that essentially doesn't distinguish in the global warming characteristics of fuel, and I think that is an enormous loophole that we have to close. I will be introducing a bill here shortly to introduce a fuel standard to make sure that our alternative fuels are alternative with a capital A when it comes to global warming. We do have limited resources to invest in our future and we have to do it with fuels that will in fact skin the cat of global warming as well as national security, and I think we will need to have a standard that recognizes that.

Now, that leads to this discussion of coal-to-liquids, and I hope that my fellow members will educate themselves about what this really means because I will be putting into the record a document from the EPA that shows that coal-to-liquids without sequestration actually has 118 percent more carbon dioxide, more global warming gas, comes out from a gallon of coal-to-liquids than gasoline, 118 percent in the wrong direction. If you do sequester the CO^2 that is generated during the process of making a gallon of coal-to-liquid, you are still, according to this chart, 3.7 percent worse than gasoline on CO^2, and I have to tell you, I have great qualms about spending large amounts of taxpayer dollars to develop a whole new industry that is going to be worse than gasoline. We have to reduce our CO^2 emissions by 80 percent ultimately by 2050 to avoid distinct problems in our climate, and to start a new industry that will actually go backwards on carbon dioxide emissions. I have real qualms about that, and I think we are going to have to have a discussion about that and I hope our members will acquaint themselves. Coal-to-liquids with existing technology, and I stand to be educated if I am wrong, cannot be considered a green technology. It can help us with our energy security issues, but to do one but go backwards in the other, I have great concerns about. That is even assuming we can sequester all the CO^2 during this development, which is an unknown at this point. I am hopeful that we can but it is still an unknown.

So I think that is worthy of discussion. I look forward to the testimony today and get to a point where we can really develop alternative fuels that will deal with global warming.

Thank you.

[The EPA document follows:]

Emission Facts

Greenhouse Gas Impacts of Expanded Renewable and Alternative Fuels Use

The increased use of renewable and alternative fuels can result in significant reductions in the use of petroleum-based fuels. By displacing petroleum fuels, many, although not all, of these fuels can provide reductions in greenhouse gas emissions. To estimate the impacts of increases in renewable and alternative fuels on greenhouse gas emissions, the entire fuel lifecycle including fossil fuel extraction or feedstock growth, fuel production, distribution, and combustion should be accounted for. There are a variety of lifecycle models and analyses available to perform this type of work, the results presented here are based on one such model, Argonne National Laboratory's GREET model, and one specific set of assumptions.

Lifecycle analyses must contend with the fact that the inputs and assumptions generally represent industry-wide averages even though energy consumed and emissions generated can vary widely from one facility or process to another. Thus, greenhouse gas emissions can vary depending on each of these factors and the assumptions made about those factors. For example, renewable and alternative fuel production plants can utilize different processes and be powered with biomass, natural gas, coal or a mix of these fuels. Similarly, greenhouse gas emissions from alternative fuels like hydrogen depend on the fuel used to make the hydrogen. The combustion, or use of these fuels in vehicles, is another factor that influences lifecycle greenhouse gas emissions. For example, electric vehicles can have a much higher fuel efficiency thereby improving the lifecycle greenhouse profile of electricity as a fuel.

The chart below presents an estimate for the percent change in lifecycle greenhouse gas emissions, relative to the petroleum fuel that is displaced, of a range of alternative and renewable fuels. The fuels are compared on an energy equivalent or BTU basis. Thus, for instance, for every BTU of gasoline which is replaced by corn ethanol, the total lifecycle greenhouse gas emissions that would have been produced from that

United States Environmental Protection Agency

Office of Transportation and Air Quality

EPA420-F-07-035
April 2007

BTU of gasoline would be reduced by 21.8 percent. These emissions account not only for CO2, but also methane and nitrous oxide.

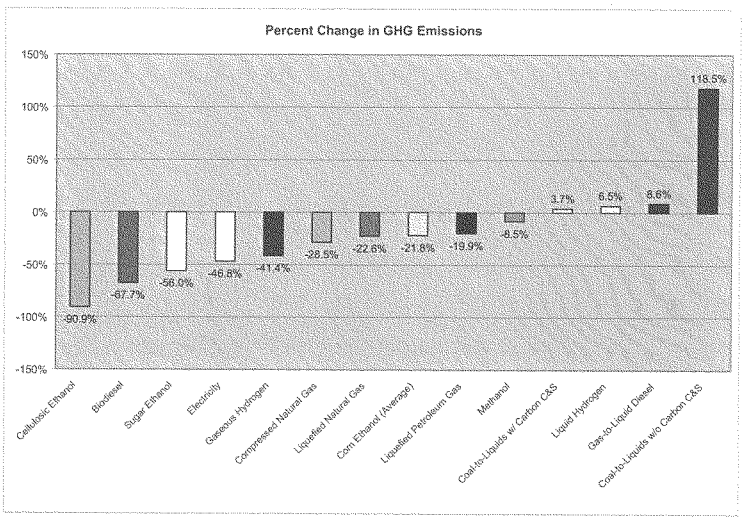

This chart represents best available information about current or projected production practices and the impact of those practices on lifecycle greenhouse gas emissions. The numbers presented for renewable fuels were used in the analysis of the Agency's Renewable Fuel Standard rulemaking. EPA along with other Federal agencies and stakeholders are committed to continuing to improve lifecycle analysis techniques.

Assumptions for ethanol and biodiesel production are based on analysis completed for the Renewable Fuel Standard as follows:

- Corn ethanol: represents current and near future production, primarily through the dry mill process (99%), with natural gas as the primary fuel source (86%). The percent change in GHGs for corn ethanol can range from 54% decrease for a biomass-fired dry mill plant to a 4 % increase for a coal-fired wet mill plant.
- Cellulosic ethanol: represents an average mix of the following feedstock sources and production process; hybrid poplar, switchgrass, and corn stover ethanol produced in the fermentation route, and forest waste ethanol produced in the gasification route.
- Biodiesel: represents an average mix of soybean oil and yellow grease feedstock produced through transesterification.
- Sugar ethanol: represents an average of corn and cellulosic ethanol which we believe is a good estimation of sugarcane ethanol production.

Assumptions on alternative fuels production are based on GREET defaults and the following assumptions:

- Electricity: represents the national average CO2 output rate for electricity in 2004, based on the EPA eGRID database, which assumes a U.S. average mix of fuel types. This number also accounts for the higher per mile efficiency of electric vehicles.
- Hydrogen (gaseous and liquid): represents using natural gas to produce hydrogen and accounts for the higher per mile efficiency of use of hydrogen in a fuel cell vehicle.
- Coal-to-Liquids: represents production of Fischer-Tropsch diesel fuel from coal. The carbon capture and sequestration case includes electricity needed for capture and storage.
- Natural Gas (compressed and liquefied): represents production from fossil sources (e.g., does not account for biogas potential).
- Methanol: represents fuel produced from natural gas feedstock.
- Liquefied Petroleum Gas: represents production from natural gas and crude oil feedstocks.
- Gas-to-Liquids: represents production of Fischer-Tropsch diesel fuel from natural gas.

Mr. BUTTERFIELD. Thank you.

The gentleman from Texas, Mr. Burgess.

OPENING STATEMENT OF HON. MICHAEL C. BURGESS, A REPRESENTATIVE IN CONGRESS FROM THE STATE OF TEXAS

Mr. BURGESS. Thank you, Mr. Chairman.

It is really exciting to sit on this committee and hear all of the initiatives that are happening across the country, so I am going to tell you one that is happening in my backyard in Denton, TX, with Biodiesel Industries. This is a real exciting time for me because this small company uses the recovered methane gas from a landfill to power their heaters that saponifies the fat in the process, and I don't completely understand but what a great deal. In Texas, a well-prepared chicken-fried steak—I am a physician so I can say this with medical authority but a well-prepared chicken-fried steak will count as two of our five servings of vegetables on a daily basis so we do have a lot of restaurant grease to dispose of, and the great thing about Biodiesel Industries is, they go around to restaurants around the Dallas-Fort Worth metroplex, collect this restaurant grease and recycle it and sell it as B–20. The primary customers are people who want the B–20 biodiesel because of the lubricity that the bio part of the biodiesel provides in the diesel engines that are manufactured to run on low-sulfur diesel, so in fact there are flex-fuel vehicles already coming off the lines and even our Peterbilt plant there in Denton is starting to use the new Cumins engine which will accept biodiesel. So this is a great story that is happening back home. My one concern is that the renewable diesel is eligible for $1 per gallon tax credit while the biodiesel created from restaurant grease is only eligible for a 50-cent-per-gallon tax credit. So I introduced legislation, H.R. 927, that would provide parity for biodiesel produced from recycled restaurant grease and of course we have got a lot of that in Texas.

Cellulosic ethanol, I love the concept. Humans ought to be smart enough to do what a termite can do with its salivary gland. All the time we start our presidential processes in Iowa. I suspect we are going to have a starch-based source of ethanol but I am excited about the prospect of being able to use the more abundant cellulosic feedstock for ethanol production in this country. But it is an exciting time and it is because of American exceptionalism, it is because of American ingenuity. I applaud the work that you all do.

Mr. Chairman, I will yield back.

Mr. BUTTERFIELD. Thank you, Dr. Burgess.

At this time the chair recognizes the gentlelady from Oregon, Ms. Hooley.

OPENING STATEMENT OF HON. DARLENE HOOLEY, A REPRESENTATIVE IN CONGRESS FROM THE STATE OF OREGON

Ms. HOOLEY. Thank you, Mr. Chairman. I too would like to add my words of sympathy to not only the Members that serve that area but all the families of the students, the horrible tragedy that happened.

I would like to thank all of our witnesses for being here today. There is just really one thing I want to say. As we talk about becoming energy independent for national security reasons, I think it

is absolutely imperative as we look at new technologies, we look at new ways of making fuels that we look at not only the upside but the downside. Right now corn is a hot commodity. We have a lot of people making a lot of money off of corn, they are turning it into ethanol. But at what point are we driving up the food prices and how much land do you have to put in to really provide enough corn to produce enough fuel so it is a viable source. I just think it is important whether we are looking at coal-to-liquids, we are looking at ethanol, looking at biomass, we are looking at any of the alternative fuels that we also understand not only the upside of it but the downside of it, and we understand what the consequences are and I think it is really important as we go through all of these issues because not only are we looking at energy independence for security purposes but we are also looking at global warming and how to deal with that, and I would hope today that as you testify, that you talk about not only the great things that can happen with this but also what some of the downsides are that can happen with it.

So I look forward to your testimony today. Thank you very much for being here.

Mr. BUTTERFIELD. I thank the gentlelady.

Are there any other opening statements that we have omitted?

That completes the opening statements. At this time I am pleased to introduce our panel for this morning. First we are going to hear from Mr. John Ward, who is the vice president of Headwaters Incorporated, and incidentally, he is also a constituent of our good friend from Utah, Mr. Matheson. Following Mr. Ward's testimony, we will hear from Mr. Donald Maley, Jr., who is the vice president of Leucadia International. Next will be Mr. Brian Foody. Mr. Foody is the chief executive of Iogen Corporation. I am from the South, I may not have pronounced that correctly, but I think it is Iogen Corporation. We will then hear from Scott Hughes, who is the director with the National Biodiesel Board. Then we will hear from Mr. Phil Lampert, who is executive director of the National Ethanol Vehicle Coalition. Finally, we will hear from Dr. Alexander Farrell, who is assistant professor and director of the Transportation Sustainability Research Center at the University of California at Berkeley. Gentlemen, your full statements will be made part of the hearing record and at this time you will each be recognized for 5 minutes.

Mr. Ward, we will begin with you.

STATEMENT OF JOHN WARD, VICE PRESIDENT, HEADWATERS INCORPORATED

Mr. WARD. Thank you, Mr. Chairman. Honorable members of the committee, I am John Ward, vice president of Headwaters on whose behalf I am testifying today. I also serve as immediate past president of the American Coal Council and as a member of the National Coal Council as appointed by the Secretary of Energy.

Headwaters is a member of the Coal-to-Liquids Coalition. This is a broad group of industry, labor, energy technology developers and consumer groups. The coalition is interested in strengthening U.S. energy independence through greater utilization of domestic coal to produce clean transportation fuels.

The opening statements have done an excellent job of reminding us of the hazards of dependence on foreign oil and the abundance of our own coal here in the United States and also the need to develop future energy resources in an environmentally responsible way. Coal-to-liquids has an opportunity to help us in all of those areas. My written testimony includes more detailed information about the history of coal-to-liquids technology and the types of technologies that exist today.

I will summarize by pointing out that any product that can be made from oil can be made from coal. Coal-to-liquids technologies are already proven and they are being deployed at commercial scale overseas. They are economically competitive when oil prices are above about $40 a barrel, and oil prices are above $60 a barrel today. In the United States, potential coal-to-liquids projects are being discussed in at least 15 different States. From a product perspective, coal-to-liquids refineries make the same range of products as petroleum-based refineries. This includes gasoline, diesel fuel, jet fuel and chemical feedstocks. These fuels can be distributed in today's pipelines. They can be used directly in today's cars and trucks and buses and trains and airplanes without modifications to the engines. Fuels produced by coal-to-liquids processes are exceptionally clean when compared to today's petroleum-derived transportation fuels. Coal-to-liquids fuels contain substantially no sulfur and exhibit lower particulate and carbon monoxide emissions. These fuels also contribute less to the formation of nitrogen oxide then the petroleum-derived fuels and they are readily biodegradable. Coal-to-liquids refineries generate carbon dioxide in a highly concentrated form that allows for carbon capture and storage. Coal-to-liquids refineries equipped with carbon dioxide capture and storage can produce fuels with life cycle greenhouse gas emissions profiles that are as good as or better than petroleum-derived fuels.

Although coal-to-liquids projects are economically viable in today's oil price environment, there are still significant hurdles to get the first projects built. For the first plants, financial institutions will be reluctant to fund multi-billion-dollar projects without significant technology and market performance guarantees. This includes some assurance that plants will not be rendered uneconomic by oil-producing nations or cartels that may seek to artificially reduce oil prices just long enough to prevent the formation of this new competitive industry.

Other nations are moving forward more aggressively than we are to deploy coal-to-liquids technologies. In China, for instance, the government has already committed more than $30 billion to commercialization of coal liquefaction technologies and the construction of the first plants has already begun.

Now, as long as oil prices remain high or climb higher, market forces will lead to the development of a coal-to-liquids infrastructure in the United States but that development will come slowly and in measured steps. If for energy security reasons the United States would like to speed the development of a capability for making transportation fuels from our most abundant domestic energy resource, then incentives for the first coal-to-liquids projects are appropriate.

Now, one example of incentives, Chairman Boucher and Congressman Shimkus have publicly discussed an approach that would establish a oil-price collar to guide the government's investment. If oil prices were to drop below a specified level, the United States would make payments to coal-to-liquids projects that are participating in the program to ensure their viability, and alternatively, if oil prices rose above a certain level, those projects would pay back to the Federal Government. Properly constructed, such a program could have a meaningful impact on addressing the market risks associated with fluctuating oil prices.

The Coal-to-Liquids Coalition has also identified five specific actions the Federal Government can take to overcome deployment barriers. More-detailed descriptions are in my written testimony, but in summary, they include front-end engineering and design assistance, providing purchases of fuels by the Department of Defense and other Federal agencies, extending the excise tax credit treatment for coal-derived fuels, loan guarantees and investment tax credits.

The advantages to developing a coal-to-liquids capability in the United States are numerous. Some of the billions of dollars we now send overseas to buy oil would be kept at home to develop American jobs using American energy resources. We could expand and diversify our liquid fuels production and refining capacity using technologies that are already proven. We would produce clean-burning fuels that can be distributed throughout existing pipelines and service stations to fuel our existing vehicles with no modifications to their engines and we would take a real and immediate step towards greater energy security.

Thank you for the invitation to testify and for your interest in this important topic. I will be happy to answer any questions at the appropriate time.

[The prepared statement of Mr. Ward follows:]

John N. Ward
Vice President, Marketing & Government Affairs
Headwaters Incorporated

Testimony
Before the Subcommittee on Energy and Air Quality
Committee on Energy & Commerce
United States House of Representatives

Alternative Transportation Fuels: An Overview
April 18, 2007

Improving America's Energy Security
Through Liquid Fuels Derived from Coal

Thank you Mr. Chairman. Honorable Members of the Committee, I am John Ward, Vice President of Headwaters Incorporated, on whose behalf I am testifying today. I also serve as Immediate Past President of the American Coal Council and as a member of the National Coal Council as appointed by the Secretary of Energy.

Headwaters Incorporated is a New York Stock Exchange company that provides an array of energy services. We are a leading provider of pre-combustion clean coal technologies for power generation, including coal cleaning, upgrading and treatment. We are the nation's largest post-combustion coal product manager, recycling coal ash from more than 100 power plants nationwide. We have built a large construction materials manufacturing business and incorporated coal ash in many of our products. We are currently commercializing technologies for upgrading heavy oil and have entered the biofuels market by constructing our first ethanol production facility utilizing waste heat from an existing coal fueled power plant in North Dakota. Headwaters is also active as both a technology provider and a project developer in the field of coal-to-liquid fuels.

Headwaters is a member of the Coal-to-Liquids Coalition -- a broad group of industry, labor, energy technology developers and consumer groups. This coalition is interested in strengthening U.S. energy independence through greater utilization of domestic coal to produce clean transportation fuels.

Why Coal-to-Liquids?

It's easy to see why coal-to-liquids is attracting significant attention these days. In the president's words, the United States is addicted to oil. U.S. petroleum imports in 2005 exceeded $250 billion. In the past two years, natural disasters have disrupted oil production and refining on the U.S. gulf coast. Political instability in the Middle East and other oil producing regions is a constant threat. Fuel prices have rapidly escalated along with world oil prices that are reaching levels unseen since the 1970s energy crisis.

The situation is not likely to get much better in the future. Global oil demand was 84.3 million barrels per day in 2005. The United States consumed 20.7 million barrels per day (24.5%) and imported 13.5 million barrels per day of petroleum products. Worldwide demand for petroleum products is expected to increase 40% by 2025 largely due to growing demand in China and India. World oil production could peak before 2025. Most of the remaining conventional world oil reserves are located in politically unstable countries.

In contrast, coal remains the most abundant fossil fuel in the world and the United States has more coal reserves than any other country. With coal-to-liquids technology, the United States can take control of its energy destiny. Any product made from oil can be made from coal. At today's oil prices, coal-to-liquids is economical and has the power to enhance energy security, create jobs here at home, lessen the U.S trade deficit, and provide environmentally superior fuels that work in today's vehicles. By building even a few coal-to-liquids plants, the U.S. would increase and diversify its domestic production and refining base – adding spare capacity to provide a shock absorber for price volatility.

Coal-to-Liquids Historical Perspective

Headwaters and its predecessors have been engaged in coal-to-liquids technologies since the late 1940s. Our alternative fuels division is comprised of the former research and development arm of Husky Oil and holds approximately two dozen patents and patents pending related to coal-to-liquids technologies.

The founders of this group included scientists engaged in the Manhattan Project during World War II. After the conclusion of the war, these scientists were dispatched to Europe to gather information on technologies used by Germany to make gasoline and diesel fuel from coal during the war.

In the late 1940s, this group designed the first high temperature Fischer Tropsch conversion plant which operated from 1950 to 1955 in Brownsville, Texas. It produced liquid fuels commercially at a rate of 7,000 barrels per day. Why did it shut down? The discovery of cheap oil in Saudi Arabia.

The Arab oil embargo of 1973 reignited interest in using domestic energy resources such as coal for producing transportation fuels. From 1975 to 2000, Headwaters researchers were prime developers of direct coal liquefaction technology. This effort, which received more than $3 billion of federal research funding, led to the completion of an 1,800 barrels per day demonstration plant in Catlettsburg, Kentucky. Why did deployment activities cease there? OPEC drove oil prices to lows that left new technologies unable to enter the market and compete.

Today, our nation finds itself in another energy crisis. Oil costs more than $63 per barrel and comes predominantly from unstable parts of the world. There is little spare production and refining capacity and our refineries are concentrated in areas susceptible to natural disasters or terrorist attacks. And once again, our nation is considering coal as

a source for liquid transportation fuels. The question is: What can we do this time to ensure that the technologies are fully deployed?

Coal-to-Liquids Technology Overview

From a product perspective, coal-to-liquids refineries are very similar to petroleum refineries. They make the same range of products, including gasoline, diesel fuel, jet fuel and chemical feedstocks. These fuels can be distributed in today's pipelines without modification. They can be blended with petroleum derived fuels if desired. They can be used directly in today's cars, trucks, trains and airplanes without modifications to the engines.

From a production perspective, coal-to-liquids refineries utilize technologies that have been commercially proven and are already being deployed in other parts of the world. Two main types of coal-to-liquids technologies exist. Indirect coal liquefaction first gasifies the solid coal and then converts the gas into liquid fuels. Direct coal liquefaction converts solid coal directly into a liquid "syncrude" that can then be further refined into fuel products.

To understand how coal-to-liquids technologies work, it is helpful to focus on the role of hydrogen in fuels. Coal typically contains only 5% hydrogen, while distillable liquid fuels such as petroleum typically contain 14% hydrogen. The hydrogen deficit can be made up in two different ways:

Direct Coal Liquefaction (DCL)
Coal + Catalyst + Hydrogen (H_2) → Hydrocarbons (C_xH_y)

or

Indirect Coal Liquefaction (ICL)
1. Gasification: Coal + Oxygen + Steam → Syngas (H_2 + CO)
2. FT Synthesis: H_2 + CO + Catalyst → Hydrocarbons (C_xH_y)

Direct Coal Liquefaction

Direct coal liquefaction involves mixing dry, pulverized coal with recycled process oil and heating the mixture under pressure in the presence of a catalyst and hydrogen. Under these conditions, the coal transforms into a liquid. The large coal molecules (containing hundreds or thousands of atoms) are broken down into smaller molecules (containing dozens of atoms). Hydrogen attaches to the broken ends of the molecules, resulting in hydrogen content similar to that of petroleum. The process simultaneously removes sulfur, nitrogen and ash, resulting in a synthetic crude oil (syncrude) which can be refined just like petroleum-derived crude oil into a wide range of ultra-clean finished products.

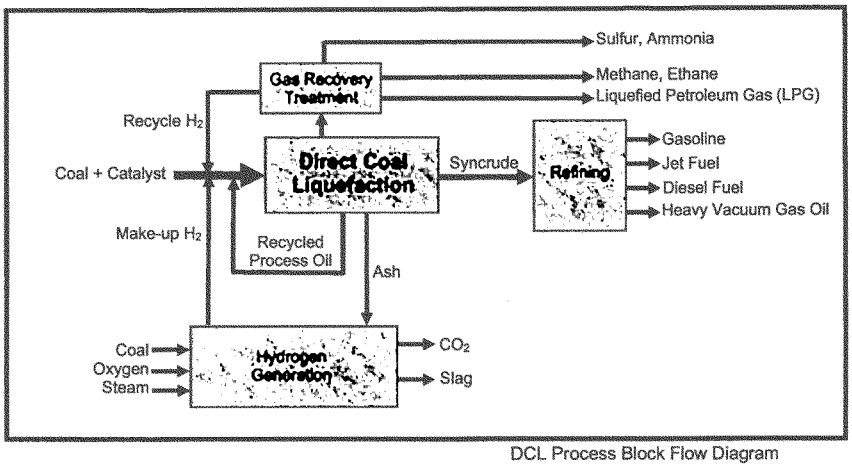

DCL Process Block Flow Diagram

Direct coal liquefaction originated in Germany in 1913, based on work by Friedrich Bergius. It was used extensively by the Germans in World War II to produce high octane aviation fuel. Since that time, tremendous advancements have been made in product yields, purity and ease of product upgrading.

From 1976 to 2000, the US government invested approximately $3.6 billion (1999 dollars) on improving and scaling up direct coal liquefaction. During this time, pilot and demonstration facilities ranging from 30 to 1800 barrels per day of liquid fuel were built and operated in the United States. The end result of this effort is the HTI DCL process developed by Hydrocarbon Technologies Incorporated, a subsidiary of Headwaters.

In June 2002, the largest coal company in China (Shenhua Group) agreed to apply the HTI technology for the first phase of a three-phase multi-billion dollar direct coal liquefaction project. The Shenhua direct coal liquefaction facility in Inner Mongolia is currently under construction and is scheduled to startup in 2008. The first phase, as currently configured, has a capacity of 20,000 barrels per day.

Additional direct coal liquefaction projects are currently being studied or planned in India, the Philippines, Mongolia and Indonesia. The Philippines project is based on hybrid technology utilizing both direct and indirect coal liquefaction.

Indirect Coal Liquefaction

Indirect coal liquefaction is a two-step process consisting of coal gasification and Fischer-Tropsch (FT) synthesis. Coal is gasified with oxygen and steam to produce a synthesis gas (syngas) containing hydrogen and carbon monoxide. The raw syngas is

cooled and cleaned of carbon dioxide and impurities. In the FT synthesis reactor, the cleaned syngas comes in contact with a catalyst that transforms the diatomic hydrogen and carbon monoxide molecules into long-chained hydrocarbons (containing dozens of atoms). The FT products can be refined just like petroleum-derived crude oil into a wide range of ultra-clean finished products.

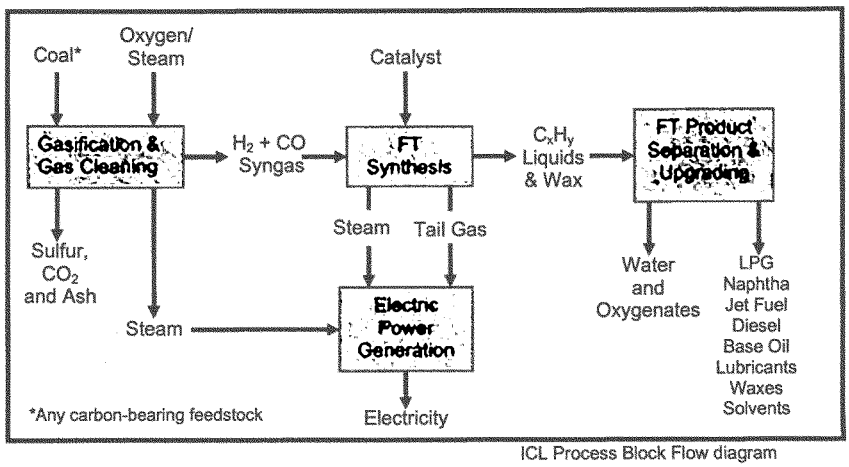

ICL Process Block Flow diagram

Indirect coal liquefaction was developed in Germany in 1923 based on work by Drs. Franz Fischer and Hans Tropsch. During World War II, the technology was used by Germany to produce 17,000 barrels per day of liquid fuels from coal.

In 1955, Sasol constructed an indirect coal liquefaction plant at Sasolburg, South Africa. Additional indirect coal liquefaction plants were constructed by Sasol in Secunda, South Africa. Today Sasol produces the equivalent of 150,000 barrels per day of fuels and petrochemicals using its technology – supplying approximately 30% of South Africa's liquid transportation fuels from coal. Technologies for indirect coal liquefaction are also being developed and deployed by Headwaters, Shell, Syntroleum and Rentech.

Indirect coal liquefaction projects are currently being studied or planned in China, Philippines, Germany, Netherlands, India, Indonesia, Australia, Mongolia, Pakistan and Canada. In the United States, indirect coal liquefaction projects are being considered in Alaska, Arizona, Colorado, Illinois, Indiana, Kentucky, Louisiana, Mississippi, Montana, North Dakota, Ohio, Pennsylvania, Texas, West Virginia and Wyoming,

Comparison of Direct and Indirect Coal Liquefaction Products

One of the main differences between direct and indirect coal liquefaction is the quality of the raw liquid products. Direct coal liquefaction raw products contain more ring

structure. Therefore direct coal liquefaction naphtha is an excellent feedstock for production of high-octane gasoline, while direct liquefaction distillate requires considerable ring opening (mild hydrocracking) to generate on spec diesel fuel. On the other hand, the straight-chain structure hydrocarbons produced by indirect coal liquefaction technology results in high-cetane diesel fuel, but indirect liquefaction naphtha needs substantial refining (isomerization and alkylation) to produce on spec gasoline.

Both processes produce low-sulfur, low-aromatic fuels after the refining step Direct and indirect coal liquefaction can be combined into a hybrid plant that produces both types of products that can be blended into premium quality gasoline, jet fuel and diesel with minimum refining.

	Direct	Indirect	EPA 2006 Diesel Spec
Distillable product mix	65% diesel 35% naphtha	65 -80% diesel 20-35% naphtha	
Diesel cetane	42-47	70-75	>40
Diesel sulfur	<5 ppm	<1 ppm	<15 ppm
Diesel aromatics	4.8%	<4%	<35%
Diesel specific gravity	0.865	0.780	
Naphtha octane (RON)	>100	45-75	
Naphtha sulfur	<0.5 ppm	Nil	
Naphtha aromatics	5%	2%	
Naphtha specific gravity	0.764	0.673	

Indirect coal liquefaction plants usually include combined-cycle electric power plants because they produce a substantial amount of steam and fuel gas that can be used to generate electricity. Direct coal liquefaction plants produce less steam and fuel gas, so they can be designed to purchase electricity, be self-sufficient in electricity generation or generate excess power depending on the local market conditions.

Direct coal liquefaction plants produce more liquid fuel per ton of coal than indirect plants. However, indirect plants are better suited for polygeneration of fuels, chemicals and electricity than direct plants.

The preferred feedstock for direct coal liquefaction plants is low-ash, sulfur-bearing, sub-bituminous or bituminous coal. Indirect plants have greater feedstock flexibility and can be designed for almost any type of coal ranging from lignite to anthracite.

Coal-to-Liquids Environmental Profile

Fuels produced by coal-to-liquids processes are usable in existing engines without modifications and can be distributed through existing pipelines and distribution systems.

Nevertheless, they are exceptionally clean when compared to today's petroleum-derived transportation fuels.

Indirect coal liquefaction fuels derived from the Fischer-Tropsch process, in particular, contain substantially no sulfur and also exhibit lower particulate and carbon monoxide emissions. These fuels also contribute less to the formation of nitrogen oxides than petroleum derived fuels and they are readily biodegradable.

The production of coal-to-liquids fuels is also environmentally responsible. Because coal liquefaction processes remove contaminants from coal prior to combustion, process emissions from coal-to-liquids plants are much lower than traditional pulverized coal power plants.

Both direct and indirect coal liquefaction plants generate carbon dioxide in highly concentrated form allowing carbon capture and storage. Coal-to-liquids plants with carbon dioxide capture and storage can produce fuels with life-cycle greenhouse gas emission profiles that are as good as or better than that of petroleum-derived products.

A life-cycle greenhouse gas emissions inventory for indirect coal liquefaction diesel was prepared for the U.S. Department of Energy National Energy Laboratory (NETL) in June 2001. This study compared the emissions for indirect coal liquefaction (with and without carbon capture and storage) diesel with conventional petroleum diesel delivered to Chicago, IL. Some of the results from that study are summarized in the following table:

Feedstock	**Grams of CO2-equivalent Emissions per Mile in a Sport Utility Vehicle**				
	Extraction/ Production	**Conversion/ Refining**	**Transportation/ Distribution**	**End Use Combustion**	**Total Fuel Chain**
IL#6 Coal (ICL without CCS)	26	543	1	368	939
IL#6 Coal (ICL with CCS)	26	94	1	368	490
WY Sweet Crude Oil	23	74	8	363	468
Arab Light Crude Oil	35	81	26	367	509
Alberta Syncrude	32	104	10	370	516

Life-cycle greenhouse gas emission inventories have not been completed on direct and hybrid coal liquefaction technologies. However, based on the fact that these technologies have lower plant CO_2 emissions than indirect coal liquefaction and the CO_2 is in concentrated form, it can be assumed that direct and hybrid technologies will have lower life-cycle GHG emissions than conventional petroleum diesel.

Gasification technologies like those that would be used in coal-to-liquids plants have already demonstrated the ability to capture and store carbon dioxide on a large scale. For example, the Dakota Gasification facility in North Dakota captures CO_2 from the gasification process and transports it by pipeline to western Canadian oil fields where it is productively used for enhanced oil recovery.

There is also growing interest in utilizing coal and biomass (agricultural and forestry by-products) together to further reduce net carbon dioxide emissions. This is achieved because biomass is considered a renewable resource and a zero net carbon dioxide emitter. The co-processing of coal and biomass would allow a much greater scale of liquid fuel production than an exclusive reliance on biofuels.

The co-processing of coal and biomass in commercial gasification plants is being done in Europe in the range of 80 to 90 percent coal and 10 to 20 percent biomass. It is speculated that up to 30 percent of the feed mix could be in the form of biomass; however there are economic and logistic issues to consider. Biomass is a bulky material with low density, high water content and is expensive to transport and pre-process for gasification. In addition, it tends to be seasonal and widely dispersed.

Coal-to-Liquids Economics Profile

Coal-to-liquids projects are capital intensive. Direct coal liquefaction is slightly less capital intensive than indirect coal liquefaction ($50,000-$60,000/bpd versus $60,000-$80,000/bpd). Escalating capital costs related to raw materials prices and equipment availability make small coal-to-liquids projects less economic and may force some developers to look at larger capacity projects on the order of 30,000 to 80,000 barrels per day to take advantage of economies of scale.

High capital costs ($2.5 billion to $6 billion per project) and large project size (30,000 to 80,000 barrels per day) will dictate where and how viable coal-to-liquids projects can be built. Multiple partners will likely be required to spread the risks and costs. These partners may include coal suppliers, technology providers, product users, operators, or private equity providers.

Large, low-cost coal reserves (from 500 million tons to over 1 billion tons) will be needed; preferably dedicated to the project. Coal-to-liquids plants can be adapted to handle any kind of coal through proper selection of the coal gasification technology.

The following graph indicates the impact of plant size on project economics. Large CTL plants (30,000 to 80,000 barrels per day) can compete with petroleum-derived products when crude oil prices exceed $35 to $45 per barrel, not including costs related to carbon capture and storage. In this case the debt to equity ratio was assumed to be 70:30 and did not include any government incentives on product sales. This graph is only for discussion purposes. Economic analysis should be based on site specific conditions for each project.

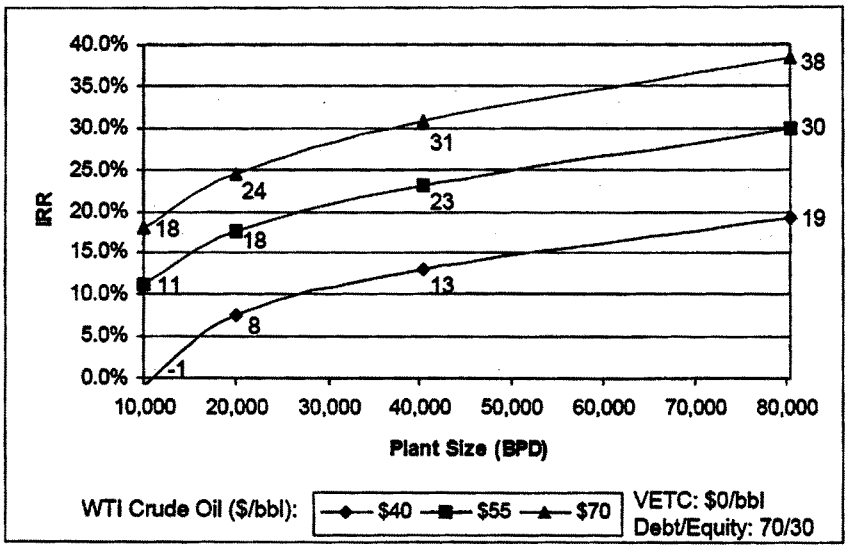

Coal-to-Liquids Commercialization Challenges

Estimates of the potential for coal-to-liquids vary widely. The Southern States Energy Board that posits the possibility of coal-to-liquids production exceeding 5 million barrels per day. The National Coal Council puts forth the vision of 2.6 million barrels per day by the year 2030. The Energy Information Administration reference case forecast projects coal-to-liquids production at about 800,000 barrels per day by 2030. This forecast assumes real oil prices increase 1.6 percent per annum over the forecast period. If real prices rise 3.6 percent per annum, EIA projects coal-to-liquids production to more than double to over 1.6 million barrels per day.

Although larger scale coal-to-liquids projects appear to be economically viable in today's oil price environment, there are still significant hurdles to get the first projects built. There are no coal-to-liquids plants operating in the U.S. that would serve as commercially proven models. Until that happens, financial institutions will be reluctant to fund multi-billion dollar projects without significant technology and market performance guarantees. This includes some assurance that plants will not be rendered uneconomic by oil producing nations or cartels that may seek to artificially reduce oil prices just long enough to prevent the formation of this competitive new industry.

Other nations are moving forward more aggressively to deploy coal-to-liquids technologies. In China, for instance, the government has already committed more than $30 billion to commercialization of coal gasification and liquefaction technologies and construction of the first plants has begun.

In the United States, Headwaters is one of several companies that are pursuing development of coal-to-liquids projects using private sector financing. As an example, one of the projects we are pursuing in the United States is the American Lignite Energy project located in North Dakota. American Lignite Energy features ample coal reserves, highly qualified development partners, and substantial existing infrastructure to support the facility. The State of North Dakota has been exceptionally supportive and has already committed $10 million of matching funds for front end engineering and design activities. But the project's viability is by no means certain. The task of raising upwards of $2 billion to build one of the first American coal-to-liquids refineries is daunting – especially for smaller companies like ours.

Headwaters certainly does not advocate abandoning America's open and efficient financial markets for a more centralized system like China's. But the United States should recognize that just because a technology is no longer a research project does not mean that the free market is ready to fully embrace it.

As long as oil prices remain high or climb higher, market forces will lead to the development of a coal-to-liquids infrastructure in the United States. But that development will come slowly and in measured steps. If for energy security reasons, the United States would like to speed development of a capability for making transportation fuels from our most abundant domestic energy resource, then incentives for the first coal-to-liquids project are appropriate.

Coal-to-Liquids Potential Incentives

Incentives for commercializing coal-to-liquids technologies in the United States should be constructed to address the market risks that make financing of the first several plants difficult. For example, Chairman Boucher has publicly discussed an approach that would establish an "oil price collar" to guide the government's investment. If oil prices were to drop below a specified level, the United States would make payments to coal-to-liquids projects participating in the program to ensure their viability. Alternatively, if oil prices rose above a higher specified level, the participating projects would pay back into the program. Properly constructed, such a program could have a meaningful effect on addressing the market risk associated with fluctuating oil prices.

The Coal-to-Liquids Coalition has also identified five specific actions the federal government could take to help overcome deployment barriers:

1. Provide funding, through non-recourse loans or grants, for Front End Engineering and Design (FEED) activities. These activities are necessary to define projects sufficiently to seek project financing in the private sector. FEED for a billion dollar project can cost upwards of $50 million.

2. Provide markets for the fuel produced by the first coal-to-liquids plants. Federal agencies like the Department of Defense are major consumers of liquid fuels. By agreeing to purchase coal derived fuels at market value, but not lower than a

prescribed minimum price, the government can remove the risk of reductions in oil prices that could stop development of this industry.

3. Extend excise tax credit treatment for coal derived fuels. The recent SAFETEA-LU Bill extended to coal-derived fuels the approximately 50 cents per gallon excise tax credit that was originally created as an incentive for ethanol production. But the provision as now enacted will expire before any coal-to-liquids facilities could be placed in service.

4. Appropriate funds for loan guarantees authorized in the Energy Policy Act of 2005 and ensure that those funds are made available to coal-to-liquids projects.

5. Ensure that industrial gasification tax credits authorized in the Energy Policy Act of 2005 are also extended to coal-to-liquids projects.

Combined with support from states and local communities anxious to see development of coal resources, these actions would help private industry bridge the deployment gap and establish a coal-to-liquids capability more quickly for our nation.

Coal-to-Liquids Advantages

The advantages to developing a coal-to-liquids capability in the United States are numerous. Some of the dollars we now send overseas to buy oil would be kept at home to develop American jobs utilizing American energy resources. We would expand and diversify our liquid fuels production and refining capacity using technologies that are already proven. We would produce clean-burning fuels that can be distributed through our existing pipelines and service stations to fuel our existing vehicles with no modifications to their engines. We would take a real and immediate step toward greater energy security.

Thank you for the invitation to testify and for your interest in this important topic. I would be happy to answer any questions.

Mr. BUTTERFIELD. The witness is thanked.

Mr. Maley.

STATEMENT OF DONALD W. MALEY, JR., VICE PRESIDENT, LEUCADIA INTERNATIONAL CORPORATION, NEW YORK, NY

Mr. MALEY. Good morning, Mr. Chairman and members of the committee. My name is Don Maley. I am a vice president at Leucadia National Corporation based in New York. First of all, I would like to apologize for my attire. I was in Indianapolis yesterday expecting to fly home to New York last night before coming down here, and the weather in New York caused a 3-hour delay and then cancellation of my flight and so here I am today in casual attire, which is all I had.

Mr. BUTTERFIELD. If there is any group that would understand, it is this group, so it is alright.

Mr. MALEY. Thank you very much, Mr. Chairman.

Leucadia National Corporation is a holding company with investments in a wide variety of different industries. Energy, mining, manufacturing, real estate, health care are a few examples of some of our investments. My background, I have been with Leucadia for 7 years now. I am responsible for our energy investments. Prior to that time, I spent 22 years as an energy banker working on large energy projects around the world. For the last 5 years I have been focused on gasification as a technology that we think holds a lot of promise. Some of the things that we like about gasification is that it promotes economic development. When we go into a community, we see strong support for the development of these kinds of projects. It is using out natural energy resources in the United States so it is promoting energy independence and the technology is doing it in an environmentally advanced way, which we think is an important part of the puzzle.

Currently, we are in development of four projects around the United States. One of our projects is a coal-to-liquids project located in Illinois. We are working on a pipeline-quality natural gas project in Indiana using Indiana coal, that we gasify that coal. We are working on a similar project in Louisiana. That project, however, would take petroleum coke to make the pipeline-quality natural gas. And then lastly, we are working on a project in Texas that would again take petroleum coke but use it to make feedstocks for chemicals for industrial use.

What I would like to address today is, I would really like to differentiate the three other projects we are working on from the coal-to-liquids project in terms of the challenges of trying to get these projects financed, and there are really two key areas to focus on. One is with coal-to-liquids a perception in the financial community of a greater technology risk than would be inherent in some of the other applications of gasification technology. The second area is what we see currently as the inability to achieve price certainty on a coal-to-liquids project where on the other hand for some of the other projects we are finding that there is an opportunity to get long-term contracts that provide the kind of price certainty that you need for these projects that are very high capital investment program that need long-term price stability in order to assure the

adequate return of the investment, the repayment of the loan and have a successful project.

With existing gasification technology, you have over 100 gasification plans operating around the world. They have been operating for over 20 years. You have over 300 individual gasifiers or gasification units operating at these different facilities, so as an old banker I can go around and say I can touch and feel and see these facilities and get reasonably comfortable that this technology is a proven technology and is going to work. When you start to look at coal-to-liquids technology, while it has been around for a long time, there is really only one large commercial-scale operation in the world and that is in South Africa. It was constructed over 20 years ago. And so on Wall Street and the financial community and equity investors like ourselves, we are quite concerned about building this next generation of facilities and how we raise the dollars in the financial community to support the construction of these plants. So I think with this particular risk, we do see the benefits of loan guarantees and these kinds of programs to help these projects get through the construction phase, get some of the bugs worked out and get them into commercial operations. But we don't really see that kind of program addressing the question of price certainty and the lack of price certainty in the transportation fuels markets.

We see many ways that could potentially be addressed but I agree with my colleague that the legislation introduced last fall by Chairman Boucher and Mr. Shimkus is an excellent way to promote the development of this technology. It would become a basis on which not only the Wall Street community could finance these projects but another key portion of it is that developers like ourselves need to spend $35, $50 million to develop these projects. We are not going to spend that money unless it is going to lead to a successful project.

Thank you very much.

[The prepared statement of Mr. Maley follows:]

Written Statement of Donald W. Maley

Vice President

Leucadia National Corporation

Before the

House Subcommittee on

Energy and Air Quality

Energy and Commerce Committee

U.S. House of Representatives

April 18, 2007

I. BACKGROUND – LEUCADIA NATIONAL CORPORATION:

This written statement is submitted by Leucadia National Corporation (LUK), a New York Stock Exchange company with a market capitalization of approximately $6.0 billion. Leucadia is a diversified holding company with headquarters in New York City, corporate operations in Salt Lake City and San Diego and affiliate operations throughout the world. The company focuses primarily upon "value investments," that is, investments that are judged to create long-term and sustained value. The portfolio of projects and companies that constitute the majority of Leucadia's holdings represent our strategy to focus upon these long-term investments. For nearly three decades this strategy has resulted in a compounded annual return to shareholders of greater than twenty percent. LUK has holdings in such diversified investments as energy, mining, timber, communications, banking, insurance, manufacturing, healthcare, and real estate.

II. LEUCADIA'S INVOLVEMENT IN GASIFICATION:

For the last several years, Leucadia has undertaken a comprehensive examination of investment opportunities in various emerging energy-related industries, particularly those related to the gasification of coal and other carbon-based fuels. Currently, the company is evaluating potential involvement in several gasification-based projects that would utilize coal resources or petroleum coke to manufacture high value chemical feed stocks, substitute natural gas (SNG) and alternative transportation fuels, including zero sulfur diesel fuel, gasoline and jet fuel.

To assess the opportunities related to emerging gasification technology the company has assembled a group of experienced industry professionals with varied backgrounds related to the technical and financial aspects of gasification technology, major energy project development as well as market and environmental expertise.

Leucadia is actively developing several gasification projects. The first project is a polygeneration gasification project being designed to provide a slate of industrial chemicals as well as electricity generation for use at a Gulf Coast industrial site. A second project involves the use of gasification technology to manufacture pipeline quality substitute natural gas (SNG) that can be distributed and utilized in the same manner as conventional natural gas. Finally, we are actively pursuing a coal-to-liquids (CTL) project to be located near a large mid-western metropolitan area where demand for clean diesel fuel, gasoline and jet fuel is among the highest in the Nation. These alternative fuels could be generated from the large-scale project that we have under consideration.

III. SIGNIFICANT RISKS ASSOCIATED WITH GASIFICATION PROJECTS:

An assessment of technology risk and long term commercial risk must be thoroughly analyzed before Leucadia, or any investor, will make contributions.

A. THE TECHNOLOGY RISK:

There are 117 operating gasification plants with a total of 385 gasifiers in operation worldwide. These gasifiers are being used to produce synthetic gas used for making hydrogen for ammonia (agriculture use), transportation fuels by means of the Fischer-Tropsch process, and electricity.

What about the gasification projects we have under consideration? In the United States there is one "coal–to-chemicals" facility operated today by Eastman Chemical Company in Kingsport, Tennessee. The facility, which began operation in 1983, gasifies about 1,200 tons per day of central Appalachian medium sulfur coal into a syngas that is used to make a variety of industrial chemicals.[1] The Great Plains Synfuels Plant, operated by Dakota Gasification Company in Beulah, North Dakota, began operations in 1984 and is currently the only coal to substitute natural gas facility in operation in this country. This facility converts 16,000 tons per day of North Dakota lignite into SNG, fertilizers and chemicals. Importantly, the CO_2 from this coal plant is captured, pressurized and transported by pipeline some 200 miles to Saskatchewan, Canada and sold for use in enhanced oil recovery. Finally, the only large-scale coal-to-liquids facilities in the world are operated by Sasol in South Africa. These projects began operations in 1955 using Lurgi gasifiers and the Fischer-Tropsch process to convert the coal-derived syngas to

[1] The Eastman Chemical facility manufactures methanol which, in turn, is the feedstock for producing gasoline. While the Fisher-Tropsch process is often cited as the means by which liquids (e.g. transportation fuels) are derived from the gasification of coal, the Kingsport facility respresents an alternative approach to the production of gasoline-from-coal.

liquid fuels. Today these facilities process about 90,000 tons of coal per day into 150,000 barrels per day of liquid fuels.

It is important to understand that while there is a great deal of developmental activity underway in the United States and worldwide to apply gasification technology to the production of SNG, chemicals and alternative fuels, there are limited developed markets and as a result Wall Street is skeptical.

With respect to our projects what distinguishes the polygeneration and SNG projects from the CTL project is the degree of certainty that the underlying gasification technology can be utilized successfully to manufacture industrial chemicals or synthetic natural gas (SNG). While the proposed CTL project would utilize gasification technology as well there is only one commercial scale CTL facility in operation in the world compared to many gasification units in operation worldwide producing chemical feedstocks and SNG. Furthermore, a CTL project is much larger and more costly and the level of certainty within the financial community about a dependable and sustained market for coal-to-liquids is much less certain.

To address the technical risks associated with gasification as perceived by Wall Street and to finance any large-scale project using gasification technology today we will require significant guarantees and warranties from creditworthy suppliers and construction/engineering firms. The costs for equity and debt in these projects will depend directly upon the level and form of those guarantees as well as the entities providing them. In the case of a large scale (at least 20,000 barrels per day of crude oil equivalent) coal-to-liquids facility, where there is but one commercial sized facility currently in operation in the world, funding will be very difficult to obtain unless

technical risks are adequately addressed and long term price certainty for product offtake has been assured.

B. THE COMMERCIAL RISK OF MARKET PRICE VOLATILITY:

The biggest issue for the financial community with respect to CTL projects is long term price certainty for product offtakes.

We have found strong interest in the marketplace for long term contracts for the products of our polygeneration and SNG projects. We believe industrial customers of chemical feedstocks and utility customers of SNG are looking for a hedge against natural gas price volatility and by creating greater price stability through the purchase of product offtakes from our projects they can establish, in turn, more predictable commodity prices for their operations and/or their customers. This need for greater price stability means that our polygeneration and SNG projects enjoy a high degree of certainty with respect to future markets as well as product prices. This certainty exists for both the short term and the longer term and thus there is a strong basis to obtain project financing.

On the other hand the alternative fuels from a CTL project must compete in a volatile market where crude oil prices are essentially controlled and the crude oil market is not a free, open market. This last point is critical. Crude oil markets are controlled by OPEC. When supply is short, they can drive the price up to $60-70 per barrel or higher and extract rent unrelated to the cost of developing and producing their product. An American CTL program would create an alternative and signal to the market that this extraordinary rent is not justified. The response of OPEC might well be to drive the price of oil below a CTL breakeven price to crush the potential competition. The marginal cost to produce a barrel of OPEC oil is well below $15 per barrel so a few CTL projects

standing alone could never survive a predatory pricing attack by OPEC. Some would argue that this fact demonstrates that CTL projects are unjustified as they cannot compete. In a truly free market, free of politics and national security issues, we might well agree with this argument. Current events around the world, however, strongly suggest that the trend unfortunately is moving further away from free markets for oil and gas. It is imperative that the United States and other coal rich nations develop alternatives to this monopoly control. To do so, we need to address the technology challenges, financing challenges and environmental challenges associated with a CTL project.

In the liquids market, unlike the SNG and coal-to-chemicals markets, the desire for price certainty, does not resonate with potential buyers of our alternative fuels output. One exception is the airline industry which is clearly seeking predictably priced fuel. Unfortunately, it is not possible at this point to develop a CTL project based on jet fuel offtake as the certification of jet fuel from a CTL project can come only after the project is up and running and the jet fuel is demonstrated to meet all specifications. This is a classic chicken or egg dilemma. Even if our CTL project were to sign purchase agreements, it is highly unlikely that such agreements will extend beyond a couple of years and certainly not for the operational lifespan of the project. For these same reasons, coal-to-liquids projects, in our view, will not be able to acquire long-term financial hedges to address the price volatility in the crude oil market. This uncertainty means that a large scale CTL project will be difficult or impossible to finance. If ultimate financeability is not assured, project developers like Leucadia, will be unwilling to commit the $30-50 million per project of development capital required to get a project to the point where long term financing can be obtained and construction can commence.

When Leucadia evaluates the market risk presented by the volatility of world oil prices, the risks are truly daunting. The figure below charts the historical crude oil price record and the range of EIA projections for the next 25 years.

World oil prices (2004 dollars per barrel)

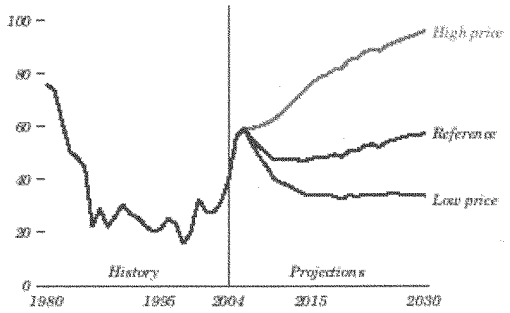

Source: EIA Energy Outlook 2006

The literature on coal-to-liquids projects, and our own analysis of the technology and project potential, concludes that a barrel of oil equivalent produced by a coal-to-liquids facility (whether zero-sulfur diesel fuel by the Fischer Trospch process or gasoline by converting coal first to methanol) might range in cost from $40 to $50 per barrel. With oil trading at above $60 per barrel, coal-to-liquids facilities become attractive investments. Because crude oil prices are not determined in a free market and as OPEC has demonstrated many times over the last thirty years, the market power of the producing nations easily dictates world prices. While EIA and others project sustained higher prices for a barrel of crude oil, the fact remains that prices can be dropped dramatically and intentionally.

More than sixty percent of this country's oil and finished petroleum products are being imported today, and there is a growing demand for even more transportation fuels.

If we are to avoid becoming ever more dependent upon imports there is a compelling rationale for U.S. federal government involvement to assist the fledgling coal-to-liquids, as well as other home grown alternative fuels, industries.

IV. ASSESSMENT OF GOVERNMENT FINANCIAL INCENTIVES DESIGNED TO ASSIST NEW TECHNOLOGY DEPLOYMENT:

What should be the form of government involvement to help in addressing the risk of very volatile markets?

First, federal loan guarantees to support the considerable debt required to construct large scale coal-to-liquids projects, which require $1.0 to $3.0 billion for projects in size from 10,000 to 30,000 barrels of oil equivalent per day, are very important in our judgment to lower the cost of debt and provide the financial community with a level of assurance – through federal government support of the project -- that their perceptions of the risks associated with CTL technology can be managed. Without such government support, the ability to raise financing for the first generation of U.S. coal-to-liquids projects at a size that will achieve economies of scale is difficult at best and probably not possible.

Moreover, while loan guarantees are an excellent mechanism to assist in the management of technology risk or as a means to raise low cost financing that will ultimately result in lower commodity prices, they do not address market price risk.

If oil prices fall below breakeven, the loan will default, the federal guaranty will be called and the federal government will be left to unravel the problems of a failed or seriously burdened project. We believe a price support mechanism, discussed below, is

better suited to manage this price risk, ensure long term project sustainability and ultimately provide a near zero cost to the federal government.

Second, outright government grants similar to the DOE project demonstration grants provided through the Clean Coal Power Initiative would not address the long-term price volatility issue. It is unlikely that there will be a sufficient amount of federal dollars ever available to provide cost-sharing towards a CTL project that will exceed $1.0 billion in costs.

Third, investment tax credits, if provided in significant volume will be attractive to the equity investor in a project because such credits relate to an immediate recoupment of some or all of the up front equity. It is important to weigh the generosity of an investment tax credit with the need for the long term commitment of the equity investor to remain active in the project. If a project experiences a drop in product prices where the tax leveraged rate of return on equity drops significantly below a minimum rate, the commitment of the equity investor diminishes or vanishes and the project may be abandoned.

Likewise, production tax credits, along with measures that allow taxpayers to rapidly depreciate or expense costs, all serve to lower the effective price of the products from a project, which can make the project more competitive if market prices fall, but do not provide needed certainty that the project's products will be competitive under all conditions in the face of highly volatile prices. Conversely, if market prices are high, these incentives, including the production tax credit, unnecessarily improve project economics when the economic boost is not needed. The bottom line is that production tax credits improve project economics, but do not get at the core problem facing CTL

projects, which is exposure to volatile oil prices that are not governed by free market economics.

V. H.R. 6249, 109TH CONGRESS – PRICE FLOOR LOANS FOR CTL PROJECTS:

Leucadia supports the concept embodied in legislation (H.R. 6249) introduced by Mr. Shimkus and Mr. Boucher in the 109th Congress as a straightforward mechanism to address market price volatility.

This legislation, if enacted, would mitigate the product market risk directly through a federally-backed price floor or price guarantee which would permit a project to rely on a predetermined price for its product. Under a price floor or price guarantee the government would be authorized to issue price guarantees to a coal-to-liquids project that would be intended to insulate the project from downside price risk in the world crude oil market. If the guarantees were triggered by a drop in world crude prices (a possibility in a market that is essentially controlled by oil producing nations) below an agreed upon price, the qualifying coal-to-liquids project could receive price guarantee payments. The payments made are loans to be repaid.

Specifically, the Shimkus/Boucher proposal, unlike other proposed price floor mechanisms is coupled with an agreement between the project and the federal government under which the project would commit to making payments to repay the loans if/when the prevailing market price exceeds an agreed upon price cap.

In effect, the coal-to-liquids project would be offered a mechanism whereby a jointly determined "price band" would be recognized. While product is sold within that price band the project, presumably, is operating within its projected economic viability. As we understand the legislative proposal, if the market price were to fall below the

lower end of the price band, the project could receive a payment from the government for the product actually produced from the project. If at any time during the course of the agreement, prices were to exceed the upper levels of the band, then the government would receive payment from the project as repayment for any prior disbursements. In addition, it is our view that if or when prices rise above the "cap" and are not required to repay prior disbursements by the government, these revenues represent a level of return not expected by the project and such "profits" should be shared with the government where the government has assumed a potential downside risk.

If the price band is set correctly, the probability that prices will drop below the agreed upon floor will be equal to, and no greater than the probability prices will rise above the cap. The revenue impact to the Federal treasury should be zero. Like the loan guarantee program authorized by Title XVII of the Energy Policy Act of 2005, this proposal also includes a self-funding mechanism that requires the project to pay upfront for a pre-determined likely cost to the government from operation of the program. In this regard, it is vitally important, if this mechanism is to work, that the calculation of "upfront cost" be transparent. Given the historical uncertainty that has attended the market price of crude oil, there will be hesitation, we suspect, over the ability to predict long term prices. We believe there are models available to provide that greater certainty and that the government should work with industry in the design of the program to utilize those models.

Several more elements should be designed into the program to avoid uncertainty and also assure the program's rapid and successful implementation with credit worthy participants. These design elements include the following:

A prohibition on "double dipping" of federal incentives. If a project receives a loan guarantee that would support operation of a selected project, then the price floor/cap should not be available. However, it may be appropriate, and indeed necessary, for a project to utilize a loan guarantee to support construction of the project. The price floor/cap mechanism would then be used at commencement of commercial operations.

This program cannot be dependent upon the stop and go, stop and go nature of government programs similar to the production tax credits available to renewable energy projects. It is possible that this might occur if after the authorization of the program, it is judged that further Congressional action is required; for example, action by the Congressional appropriations committees to authorize ceilings as is currently the case with the Title XVII loan guarantee program. At a minimum, if a project is judged to be revenue neutral, then some statutory language should be included to allow the project to proceed after a specified layover period for any Congressional review.

It will be necessary to address the issue of CO_2 emissions from coal-to-liquids plants.

The science appears compelling and where Leucadia is engaged in a number of gasification projects we are mindful of the need to address this important concern. We are currently reviewing mechanisms to capture various amounts of CO_2 emitted and to determine how best to use the CO_2 or enable long term storage. We are confident that both use and storage can be accomplished and will be done. It is important, however, that Congress not impose requirements on these first set of coal-to-liquids projects that either cannot be met with our current understanding of the technology to capture and store CO_2 or that impose so severe a cost burden on the initial individual projects as to

make them uneconomic. We do support, however, broad based public policy programs that promote the development of carbon capture sequestration technology, encourage market based solutions to the issue and spread the initial cost of development across the entire economy so that we can advance the technology needed to address this most urgent concern. The potential of using coal, petcoke or other carbonaceous fuels to produce significant quantities of domestically controlled alternative fuels is so great that every effort should be made to encourage development of several pioneer projects. Secondly, and equally as important, the production and use of zero sulfur diesel fuel, particularly in our Nation's non-attainment metropolitan areas, should be carefully weighed as a benefit to our environment. The totality of the environmental impacts of a given project should be given great weight. Leucadia has done considerable analysis on the environmental benefits of using products like zero sulfur diesel fuel in a major metropolitan area where our project might be located and our products used. We would be happy to make that analysis available to the Committee.

VI. CONCLUSIONS

The legislation introduced by Chairman Boucher and Mr. Shimkus during the 109th Congress addresses the major concern we see to financing a coal-to-liquids project. Other forms of government incentives may be helpful to other projects, but Leucadia has determined that loan guarantees to assist during construction and loans that might be called upon if or when prices dip below an agreed upon price floor are the two critical needs for financing CTL projects. If applied correctly neither form of assistance should cost taxpayers anything yet the assistance allows these types of projects to move forward in a market where prices are controlled by outside forces.

It is important to emphasize that any price floor loans are to be repaid. The proposal requires that price floor loans are only available for a portion of the project's life and if loans are outstanding at the conclusion of the loan program any outstanding amounts must be repaid during the continuation of the project. In addition, we support the concept of sharing profits with the government where prices exceed a price cap; if the government assists the project during a period of depressed prices, it should expect to share in the profits of increased price periods. Of course depressed crude oil prices means that the U.S. economy is enjoying lower prices and when the U.S. consumer is required to pay higher market prices for crude oil, the government, under this program, at least, will share in the profits occasioned by those high prices.

We urge reintroduction of the legislation introduced by Mr. Shimkus and Mr. Boucher and its enactment.

Mr. BUTTERFIELD. Thank you very much.

Mr. Foody.

STATEMENT OF BRIAN FOODY, PRESIDENT AND CHIEF EXECUTIVE OFFICER, IOGEN CORPORATION, OTTAWA, ONTARIO, CANADA

Mr. FOODY. Good morning, Mr. Chairman and members of the committee. Thank you for the opportunity to testify, and I will be talking about cellulosic ethanol.

My name is Brian Foody. I am the CEO of Iogen Corporation. We are one of the leading companies in cellulosic ethanol. We have been working in the field since the late 1970's and have designed, built and now run a cellulosic ethanol demonstration plant, and it has been making cellulosic ethanol since April 2004. On the corporate side, we have both Shell and Goldman Sachs as important strategic investors in our business. Finally, for myself, I have been working in the field of cellulosic ethanol development for over 25 years, so I have been around some time with this.

Now, in regard to the role of cellulosic ethanol and what it can play in advancing America's energy security, my key messages are first, it is very realistic to expect cellulosic ethanol to make a major contribution to U.S. energy security, and second, what investors are looking for is clarity about the future rules. If you want to encourage cellulosic ethanol or other alternative fuels, make sure people in the investment community know what to expect.

Now, one of the important innovations in the Energy Policy Act of 2005 was the introduction of renewable fuel standards, or the RFS. There has been a lot of talk about expanding the RFS and I would like to offer our perspective. First, we believe this type of approach can and will make a major contribution towards driving the market forward, establishing the expectations and clarity needed to see significant flows into advanced biofuels and other alternative fuels. A revised Renewable Fuels Standard could play a big role in helping build the secure domestic fuel supply America is looking for.

Now, in respect to an expanded RFS, there are several recent proposals that call for producing roughly 20 billion gallons of advanced biofuels or alternative fuels beyond what is being made from corn by the 2017–2022 time frame. I believe certainly within the 15-year time frame these targets are realistic and doable, and let me explain why. First, I will be speaking principally about cellulosic ethanol. The DoE and USDA recently completed a study called "Billion Ton Study" that asks the question, "does America have the capability to produce enough cellulosic biomass resources to displace 30 percent of its present petroleum consumption?" Now, that is three times what those targets I told you about were and the short answer to that question was yes, America has the capacity to deliver on these targets. Second, cellulosic ethanol is not some far-off esoteric technology. It is real, practical and being made today. When I drove to the airport, I drove in a car fueled with cellulosic ethanol, the same cellulosic ethanol that fuels our company's fleet of flex fuel vehicles, so this is a product which is actually in cars. It is not just theoretical. Now, I have been doing this for last 3 years, so cellulosic ethanol is real. If anyone doubts this, I

would be pleased to invite them out to our Ottawa demonstration plant. We had the pleasure to host Chairman Boucher on a visit last year.

Finally, if you are concerned about the ability to build these facilities, let me say that the energy industry has an enormous capability to deploy energy technology. Just as one small example to put this in context, you may have heard about the tar sands in northern Alberta in Canada. Well, last year over $30 billion was invested in developing this unconventional resource. The capacity commitments in 2006 alone would add 10 billion gallons per year of annual production capacity. Now, I have to say if the energy industry can build 10 billion gallons in northern Alberta in just 1 year, they can certainly build 20 billion gallons in America over a decade. So cellulosic ethanol really can make a major contribution and an expanded RFS would be a major impetus for the market.

Now, with respect to crafting legislation for an expanded Renewable Fuel Standard, I would like to make one key point. I believe it is crucial to establish clarity about what happens if things go wrong, what are the safety valves. Now, by safety valves I mean, what do you do if the prices go too high and what do you do if there is just not enough volume to meet the target. There is a whole range of approaches that have their advantages and disadvantages. Take as a specific example the notion that the Secretary of Energy would have a discretionary waiver. In essence, if things go wrong he could suspend the program. That will certainly work to protect against shortages and price gouging but it creates a tremendous uncertainty in the market and risks robbing any bill of its power to spur investments. Remember what I said about priority being crucial. If the rules can change, it is hard to expect investors to come to the table.

There are a number of ways to tackle this problem and let me just illustrate one. As to volume, it doesn't make sense to force people to buy a product that isn't there. If volume doesn't materialize, the safety valve has to adjust to the volume that is there. And as to price, the safety valve might be in the event some waiver is needed, permitting the Secretary to sell credits under a pre-established buyout formula. That is simple, it would solve the problem and would create much more certainty for investors.

Now, as I said, there are many approaches you can take but one thing you should keep in mind, the more clarity and certainty you can provide in your policy, the more investments and the more energy security you will be able to get.

Thank you.

[The prepared statement of Mr. Foody follows:]

Testimony to
House Committee on Energy and Commerce
Presented by
Brian Foody, President and Chief Executive Officer
Iogen Corporation
April 18, 2007

Good morning to you Mr. Chairman and to the Members of the Committee. Thank you for the invitation to appear before you this morning. I appreciate the opportunity both to comment on the tremendous potential of cellulose ethanol and to offer our thoughts how the government can work with industry to help unlock that potential.

My name is Brian Foody and I am the President and CEO of Iogen Corporation. Iogen Corporation is one of the world leaders in the cellulose ethanol field. We are proud to have been selected as one of the winners of the recent Department of Energy cellulose ethanol grant solicitation and look forward to a successful completion of our negotiations with the DOE.

At Iogen, we have been producing cellulose ethanol in our demonstration plant in Ottawa since 2004. To attend this hearing, I drove to the airport in a cellulose ethanol fuelled E85 flexible fuel Chevy Impala. In fact, we have been producing sufficient volumes of cellulose ethanol – primarily from wheat straw – to fuel our own fleet of FFVs as well as the fleets of two Canadian government Departments.

Let me say a few words about the benefits of cellulose ethanol and its potential to help America achieve several important policy objectives.

There are at least three important government policy objectives that cellulose ethanol can help achieve.

- Energy security
- New economic opportunities for rural communities
- Reduced greenhouse gas emissions associated with operating our cars and trucks

Of these, the most pressing is energy security. So the question many of us are asking is, how much can the emerging cellulose ethanol industry really deliver on its potential, and how quickly can it be done?

In order to answer that, we need to start with the feedstock opportunity. The Department of Energy and the Department of Agriculture worked together on a study of this issue. Their findings, published in an April 2005 report now known as the "Billion Ton Study", found that even with conservative assumptions about yields from crop residues and dedicated energy crops, the United States can annually produce in excess of one billion tons of cellulose feedstock for conversion to ethanol and other bio-refinery products.

That study is available online at
http://feedstockreview.ornl.gov/pdf/billion_ton_vision.pdf.

At the current state of demonstrated efficiency, cellulose ethanol production facilities could convert that material into 30 billion gallons of ethanol. Now there are obvious hurdles between here and there that will greatly effect how much and how quickly ethanol can be produced from that feedstock material.

The first issue is commercial demonstration of the technology. This Committee's work in EPACT established both a grant and a loan guarantee program to accelerate the demonstration of conversion technologies, and likely you are familiar with the state of implementation of those programs.

Next will be the challenges of building large-scale production facilities – as large as or larger than current starch ethanol facilities – in the feedstock basins around America. These challenges are common to any new production facility. Sites will have to be chosen and permits obtained. Feedstock supply contracts will have to be entered into and delivery programs will have to be established. Offtake contracts will have to be reached, and the transportation of the finished product will have to be arranged.

These challenges are not insignificant, but neither are they likely to prevent the rapid deployment of any robust cellulose conversion technology that has been proven to the satisfaction of likely investors. Investors are eager for opportunities to diversify energy holdings when there is an opportunity for sustained profitability.

One illustration of investor interest in new energy technologies is in the recent, steady expansion of integrated oil sands operations. That sector has been adding roughly 10 billion gallons per year of addition capacity with few signs of slowing.

In short, cellulose technology continues to face important business challenges, but I have every confidence that each challenge is manageable, and that ethanol from cellulose feedstocks can be a significant component in this nation's transport fuel mix.

The real challenge to unlocking the potential of cellulose ethanol is quickly becoming more about policy than technology. In order for the industry to begin producing the tens of billions of gallons of which it is capable, billions of dollars of private investment must be deployed to build plants and infrastructure.

The first challenge facing public policy is assisting industry to complete demonstrations at commercial scale for technologies that have been proven at smaller scale. Congress squarely addressed this need when it included loan guarantee and grant opportunities in the Energy Policy Act of 2005 (EPAct). The Department of Energy (DoE) is actively implementing those provisions now.

It is clear that the DoE is working hard to move those programs along quickly. We would encourage all policy makers to support those efforts. We would also encourage those charged with implementation and oversight of the Loan Guarantee program to

assiduously avoid the temptation to consider using this form of assistance for projects or technologies that are not capable of proving their readiness for commercial demonstration. Technologies that need further time for research and development should be given generous opportunities to receive grants and other R&D assistance because America needs all its creative potential to address its policy goals. But the Loan Guarantee instrument is not well suited for projects that either lack a mature technology that has been through rigorous validation at an industrial scale, or lack a thorough analysis of the financing fundamentals including the ability to repay a loan from project revenue.

Having largely addressed commercialization assistance in EPAct, this Committee's next challenge is to prepare the way for significant cellulose ethanol production capacity by establishing policies that will draw sufficient capital into the effort to deploy proven technologies.

The key on this front will be establishing policies that create enough certainty in the market to unleash the private sector equity and energy needed to build this industry. Absent that certainty, investors will be cautious, and will demand higher returns where they perceive higher risks. That will drive up the costs of supplying the market. Absent that certainty, farmers will be reluctant to consider planting dedicated energy crops or signing contracts to supply food crop residues to potential buyers.

So Congress should act to establish clear, ambitious, and visionary targets for future cellulose ethanol production. By setting a national expectation for a market in cellulose ethanol, the government will establish the first component of certainty necessary for significant private investment – anticipation of market demand.

Any legislation developed to drive investment in cellulose ethanol should address some basic needs. For example, a bill should create a system that will allow cellulose ethanol producers to join the fuel market in a way that does not undermine or conflict in any way with the established starch ethanol producers. That is critical because starch ethanol will remain the bedrock of the biofuels industry for some time to come. Without starch ethanol, the country would simply not be able to achieve ambitious targets for alternatives to foreign oil.

Additionally, legislation should send a clear signal that the government is serious about a steady expansion of its commitment to cellulose ethanol. The goals of 3 billion gallons of advanced biofuels by 2016 and 21 billion gallons by 2022 included in S. 987 by your colleagues in the Senate are both ambitious and achievable. These targets would set the fundamental precondition to the development of an advanced biofuels industry by establishing a clear market demand for the product.

Establishing such targets will further energize the industry to complete the commercial demonstration of its technologies and begin deploying them. Furthermore, these targets will establish a basis for confidence among all participants in the value chain that business opportunity of cellulose ethanol is very real. That confidence is an essential

precursor to the preparations, planning, negotiations, and other business activities needed to grow this industry.

If such legislation is enacted, farmers will begin to think seriously about the possibilities of selling their residues for profit, and managing their crops to enable them to do that. When the time comes for farmers to consider planting dedicated energy crops such as switchgrass, absent a clear signal that the market opportunity exists, they would be crazy to take such a leap. The same is true of the capital markets that will be needed to support the deployment of cellulose ethanol production technologies. Investors will not risk capital if there is not confidence that the market will sustain adequate returns.

Some of your colleagues might ask why you need to offer market guarantees in this free-market system. My answer would be simply, that this is a case where we do not want the market to dictate the outcome unaided by clear policy guidance. The main policy goal at hand should be to secure for America the myriad benefits of a more diverse, and domestically produced, fuel supply. Left to its own, the market will not accomplish that outcome because absent a policy signal there is no means of valuing energy security in the marketplace. Once the industry has confidence that a sustained market demand has been established, business will engage aggressively to not only supply that market, but to do so better, faster and cheaper than anyone else.

Now let me turn to another aspect of using policy to create market certainty – designing a safety valve to complement any market targets that might be established in legislation. The government needs to concern itself about over-committing to cellulose ethanol as much as it needs to commit to it. That is a tough balance. Some of your colleagues will ask what will happen if the technology cannot deliver the desired volume. Not only will you and your colleagues want assurances that the cellulose ethanol industry can deliver, that delivery must come at reasonable cost. Nobody wants to commit the nation to buying ethanol at unreasonably high prices.

By the same token, the cellulose ethanol industry and its investors will need to know that, the significant investments needed to deliver the anticipated volume will not be stranded by future changes in policy. The private sector will need confidence that the Program can be relied upon not to disappear or change radically.

Some might expect that setting ambitious targets for cellulose ethanol will be sufficient incentive for capital formation. But mandates alone still carry risk to investors who have a responsibility to question the future political stability of any policy that is the basis of an investment decision. Investors will ask, for example, how would policy makers respond if only 80% of the expected capacity can be on-line by a target date established in law? Would there be political pressure in such a case that would cause the targets and mandates to be repealed – possibly putting at risk investments already made? Might the level of gasoline prices in the future – either very high or very low – lead to entirely suspending a mandate for cellulose ethanol? What happens if ambitious goals for cellulose ethanol cannot be fully satisfied for any reason?

In the investment community, these uncertainties will translate into risk premiums. That will drive up the cost of supplying the ethanol to meet your targets. Conversely, greater certainty will enable lower costs and, therefore, make the policy not only more durable, but also more popular.

What we want to avoid is a situation similar to the California zero emission vehicle experience where laudable policy objectives were never achieved because the necessary safety mechanisms were not in place. In that case, there was clearly progress toward the goal, but not enough to sustain the program as originally envisioned. Those who invested based on the established public policy ultimately looked foolish, while those that chose not to invest in the new policy direction ultimately looked wise. Instead, public policy should reward and protect even incremental progress toward ambitious goals. At the same time policy should not hold the economy hostage when initial ambitions prove unreachable, because that creates political pressure to scrap the policy entirely.

So how do we manage these concerns? What mechanisms would we propose to ensure the industry can deliver billions of gallons of certifiable cellulose ethanol at a reasonable price, and achieve the Senate's policy objectives? Let me start by saying that we have given this question a lot of thought and we do not presume to have it all figured out.

It is important to create a safety valve that sustains the incentive to reach the overall goal while at the same time temporarily backing off the target only to the extent that it is beyond reach. If the cellulose ethanol industry were to succeed only in producing 80% of your ambitious targets by a given date, that should not precipitate a crisis. Instead, appropriate – and predictable – adjustments should be made that reward the progress and sustain the overall goal.

While exploring possible safety mechanisms to ensure success we have landed on some basic principles that could guide us. For example, we do not want to suspend market conditions within the market supplying the demand for advanced biofuels. We also believe that waivers should not reduce the Renewable Fuel Standard below current and planned production volumes unless additional volume can not come online at reasonable costs. Any safety mechanism should be both transparent and predictable. Doing so would improve the certainty offered potential producers and investors. It would also make any goal for expanding cellulose ethanol more sustainable and less subject to future changes in political moods and priorities.

Another area where more clarity would assist concerns how grain derived ethanol and cellulose derived ethanol will be differentiated. That becomes a concern because once ethanol is 'out the door,' ethanol is ethanol. So it will be important to create a mechanism that allows the market to treat all ethanol the same, no matter the feedstock that was used to produce it, but at the same time, will enable certainty as the government attempts to track compliance with the dual ethanol requirements for blenders. This might most easily be accomplished by certification of individual cellulose production facilities as they come on-line and assigning specialized tracking numbers to the tradable credits generated by those certified facilities.

There is one other important topic I wish to touch on. The auto industry is a critical part of the transition that is envisioned by this legislation. It is critical that they be given equally clear and reliable signals regarding what fuel their products will be expected to run on. And there will need to be sufficient time to allow the fleet to transition to accept new fuel blends. No matter whether the Congress decides to pursue maingrade blends of ethanol like E-15 and E20, or alternative blends like E-85, if the cars cannot accept it, the suppliers will not be able to sell it. I would urge the Members of this Committee to give that issue the attention it deserves.

But let me conclude by going back to my theme of certainty. Clearly the more certainty in any bill you might create, the less risk to the private sector and hence the lower will be the price of delivering the volume of cellulose ethanol you might want. Conversely, uncertainty creates greater risk and higher prices.

The Iogen team would welcome the opportunity to work with the Committee to explore possible legislative mechanisms to achieve the Committee's desired outcome.

Again, thank you for the opportunity to address this Committee.

Mr. BUTTERFIELD. Thank you.

Mr. Hughes.

STATEMENT OF SCOTT HUGHES, DIRECTOR, GOVERNMENTAL AFFAIRS, NATIONAL BIODIESEL BOARD, WASHINGTON, DC

Mr. HUGHES. Good morning, Mr. Chairman, Ranking Member Hastert and members. It is a great pleasure to be here and we really want to thank you all for holding this, what we think is a very important hearing.

My name is Scott Hughes and I am the director of governmental affairs for the National Biodiesel Board. NBB is the national trade association representing the commercial biodiesel industry as a coordinating body for research and development in the United States. Our membership encompasses over 400 members and is comprised of biodiesel producers, fuel marketers and distributors, State and national feedstock processor organizations and technology providers.

We are here today to examine alternative transportation fuels and the roles that they can play in helping enhance our Nation's energy security, and I would like to focus my comments this morning on the contributions that we see biodiesel making to the national energy pool. Biodiesel is a diesel fuel replacement that is made from agricultural fats, oils and recycled cooking oils and meets the specific commercial fuel definition and specifications established by the American Society for Testing and Materials. It is one of the best tested alternative fuels in the country and the only alternative fuel to meet all of the testing requirements of the 1990 amendments to the Clean Air Act.

Our industry's roots are based in agriculture, and to date, farmers have invested more than $50 million of their check-off dollars to conduct research and development on biodiesel. Our industry has shown slow but steady growth since the early 1990's. However, in the past 2 years it has grown exponentially. In 2004, there were approximately 25 million gallons of biodiesel sales. That increased to around 250 million gallons this past year. Likewise, we have seen significant additional investment in production facilities. Back in 2004, we had 22 biodiesel plants online, and at the end of last year we had 105 plants currently in operation, and that represents about 865 million gallons of production capacity, and there are 77 more plants currently under construction or under an expansion and that growth will account for an additional 1.7 billion gallons of production capacity.

Biodiesel is marketed primarily as a blended product with conventional diesel fuel and it goes through the existing fuel distribution infrastructure with most of the blending occurring below the rack by jobbers. We are seeing biodiesel now being offered at petroleum terminals around the country and we have space at about 35 terminals right now. Our industry has committed funds and is looking at the technical needs required to move biodiesel through U.S. pipelines. We are seeing biodiesel moving through pipelines in Europe today in low blends and we believe extending that capability to the U.S. would be substantial.

As far as energy security goes, the National Biodiesel Board has a vision of the future that by 2015 biodiesel will be viewed as an

integral component of a national energy policy which increasingly relies on clean domestic renewable fuels and that will meet 5 percent of the Nation's demand for diesel fuel. Biodiesel and ethanol can be the first tools used to reach our goals of energy security because they are liquid renewable fuels that are available right now and ready for blending into our existing fuel supply and our existing vehicles.

On economic development, biodiesel can add significantly to the United States economy. A vibrant biodiesel industry will positively impact the economy in multiple ways. Conservative modeling of biodiesel growth indicates our industry will add $24 billion to the U.S. economy over the next decade. Biodiesel production will create 40,000 new jobs in all sectors and additional tax revenues from biodiesel production will more than pay for Federal tax incentives provided to the industry to date. Equally as important, it will keep billions of dollars in America that would otherwise be spent on foreign oil.

Biodiesel contributes to cleaner air and life cycle reductions of greenhouse gases. Biodiesel is the only alternative fuel to voluntarily conform to EPA's Tier 1 and Tier 2 testing requirements to quantify emissions characteristics and health effects. That study found that we reduce harmful exhaust pollutants including potential cancer-causing emissions.

We can also help meet the national goals for the net reduction of atmospheric carbon. As a renewable fuel derived from organic materials, biodiesel and blends of biodiesel reduce the net amount of carbon dioxide. A Department of Energy study found that biodiesel production and use in comparison to petroleum diesel produces 78.5 percent less CO^2 emissions on a life cycle basis. This makes biodiesel an extremely positive technology currently available for heavy-duty diesel applications to reduce atmospheric carbon, and when you talk about energy balance, that same study noted that for every one unit of energy that was needed, fossil energy that was needed to produce a gallon of biodiesel, 3.2 units of energy are gained. So that high energy balance I think really is in favor of our ability to help add to our domestic energy security.

On regulatory and public policy, it will play a very strong role, we think, in the future maturity of the biodiesel industry for years to come. The volumetric biodiesel tax credit that was put in place in the Jobs Act of 2004 has really been a primary driver for our industry's growth and investment in that industry and so seeing a long-term extension of that credit is our top priority.

So in closing, Mr. Chairman, rising crude oil prices and political uncertainties in strategically sensitive regions of the world are focusing the public's attention on the need to enhance our Nation's energy security. Biodiesel is a viable option to begin retaking control of our energy future. Biodiesel can be a substantial tool in the Nation's overall move toward security as it adds new net gallons to the distillate fuel pool, adds new U.S. fuel production capacity, directly replaces imported finished diesel fuel, utilizes agricultural products, stimulates rural and urban economies and creates jobs, and helps potentially create new chemical industry jobs and activities here in the United States.

So Mr. Chairman, we appreciate you having this hearing and we appreciate you inviting the biodiesel industry to participate, and I would be happy to answer any questions.

[The prepared statement of Mr. Hughes follows:]

National Biodiesel Board
1101 Pennsylvania Ave., NW
Washington, DC 20004
(202) 756-4592
www.biodiesel.org

House Subcommittee on Energy and Air Quality
"Alternative Transportation Fuels: Overview"
April 18, 2007

Testimony of Scott Hughes, Director of Governmental Affairs, National Biodiesel Board

Good morning Mr. Chairman, Ranking Member Hastert, and committee members. It is a pleasure to be here today. We appreciate the committee holding this hearing and providing the opportunity to examine this important issue.

My name is Scott Hughes and I serve as Director of Governmental Affairs for the National Biodiesel Board (NBB). The NBB is the national not-for-profit trade association representing the commercial biodiesel industry as the coordinating body for research and development in the United States. The NBB was founded in 1992 and since that time has developed into a comprehensive industry association, which coordinates and interacts with a broad range of stakeholders including industry, government, and academia. NBB's membership encompasses over 400 members and is comprised of biodiesel producers; fuel marketers and distributors; state, national, and international feedstock and feedstock processor organizations; and technology providers.

We are here today to examine alternative transportation fuels and the roles they can play in helping enhance our nation's energy security. Biofuels, particularly biodiesel and ethanol, are currently experiencing tremendous growth. I would like to focus my comments this morning on why this growth is important to the American people, the factors that have contributed to that growth for biodiesel, and the role we see biodiesel having in the national energy pool.

Addressing America's need for energy security could not be more timely or critical. America relies on imports for 60 percent of its petroleum needs. Imported petroleum makes up the single largest component of our national trade deficit amounting to approximately one third of the total. As crude oil prices continue to rise, America's trade deficit continues to balloon. Every gallon of domestic, renewable biodiesel that is used to replace diesel fuel refined from imported crude reduces the need for imported crude and finished fuel, extends the diesel supply, and expands domestic refining capacity. Even a small reduction in demand has a positive effect on straining price pressures.

Biodiesel

Biodiesel is a diesel fuel replacement that is made from agricultural fats and oils and meets a specific commercial fuel definition and specification. Soybeans are the primary oilseed crop grown in the United States, and soybean oil makes up about half of the raw material available to make biodiesel. The other half consists of all other vegetable oils and animal fats. Biodiesel is made by reacting the oil with an alcohol to remove the glycerin in order to meet specifications

set forth by the American Society for Testing and Materials (ASTM). Biodiesel is one of the best-tested alternative fuels in the country and the only alternative fuel to meet all of the testing requirements of the 1990 amendments to the Clean Air Act.

Industry Background and Overview

In the early 1990's, soybean farmers struggled to maintain profitability because of high energy prices and low commodity prices. Investment in the development of a biodiesel industry was a priority to farmers eager to contribute to our energy supply, while finding ways to add value to their crops. Farmers have invested more than $50 million of their check-off dollars to date to conduct research and development on biodiesel. Much of that effort focused on the testing of biodiesel to ensure performance, establish quality standards, and gain acceptance by engine and equipment manufacturers.

The biodiesel industry has shown slow but steady growth since the early 1990's, however, in the past two years, it has grown exponentially. In 2004 there was approximately 25 million gallons of biodiesel sales. That increased to approximately 250 million gallons in 2006. Likewise, we have seen significant additional investment in production facilities growing from 22 biodiesel plants in 2004 to 105 biodiesel plants currently (865 million gallons of production capacity). There are 77 more plants currently under construction and expansion (estimated additional 1.7 billion gallons of production capacity).

Biodiesel is primarily marketed as a blended product with conventional diesel fuel typically in concentrations up to 20%. It is distributed utilizing the existing fuel distribution infrastructure with blending most commonly occurring "below the rack" by fuel jobbers. Biodiesel is beginning to be distributed through the petroleum terminal system. To date, biodiesel has positions in approximately 35 terminals. We anticipate this trend to increase. Additionally, the NBB and biodiesel industry have committed funds to study the technical needs required for moving biodiesel through U.S. pipelines. We are seeing biodiesel moving through pipelines in Europe today and extending that capability in the U.S. would be substantial.

Energy Security: Renewable Transportation Fuels Can Play Significant Role

Reducing our nation's dependence on petroleum and enhancing our energy security are a must. Both the President and Congressional leaders are calling for significant reductions in the nation's use of petroleum and development of new energy sources. Increased use of renewables in the transportation sector can play a significant role in helping achieve these objectives. Biodiesel and ethanol can be the first tools used to begin reaching that goal, because they are liquid renewable fuels that are available right now, ready for blending into our existing fuel supply and used in our existing vehicles.

With respect to biodiesel, the NBB's vision of the future is that by 2015, biodiesel will be viewed as an integral component of a national energy policy which increasingly relies on clean, domestic, renewable fuels and that it will meet 5% of the nation's demand for diesel fuel.

As an illustration of the role biodiesel can play a role in enhancing our nation's energy security, please note that Iraq is the second largest provider of crude oil into the United States from the Persian Gulf region. Of the crude that comes from Iraq, approximately 1.85 billion gallons of diesel fuel is refined for the U.S. market. If long-term, America was to replace just 5 percent of

its 37 billion gallons of on-road diesel fuel with biodiesel, it would equal 1.85 billion gallons – the same amount of diesel fuel that we get from Iraq.

Economic Development: Biodiesel Can Add Significantly to the U.S. Economy

Economic modeling[1] suggests that a vibrant biodiesel industry will positively impact the U.S. economy in multiple ways. America's biodiesel industry will add $24 billion to the U.S. economy between 2005 and 2015, assuming biodiesel growth reaches 650 million gallons of annual production by 2015. Biodiesel production will create a projected 39,102 new jobs in all sectors of the economy and additional tax revenues from biodiesel production will more than pay for the federal tax incentives provided to the industry. Equally as important, it will keep billions of dollars in America that would otherwise be spent on foreign oil.

Benefits to the U.S. Treasury: The additional tax revenues generated by a profitable U.S. biodiesel industry will be significantly larger than the value of the federal tax incentives currently provided to the industry. Assuming the existing volumetric biodiesel tax credit is extended past 2008, this program would cost a total of $3.5 billion by 2015. The industry will generate $8.3 billion of new revenue for the Federal Treasury for a positive net balance of $4.8 billion.

Oil Dollars Stay in America: Expansion of the biodiesel industry as estimated will displace 242 million barrels of crude oil between 2006 and 2015. Since the U.S. is a net importer of oil, this means that less oil will need to be imported. As a consequence, $13.6 billion (2005 dollars) will remain in the American economy instead of being sent abroad to finance oil imports.

Permanent Impacts: The ongoing annual operation of biodiesel plants offers the most significant impact from biodiesel production on the U.S. economy. The biodiesel industry will add $15.6 billion (2005 dollars) to America's Gross Domestic Product (GDP) as it spends $7.6 billion (2005 dollars) on goods and services between 2006 and 2015.

Construction Investments: Biodiesel producers will invest nearly $810 million (2005 dollars) by 2015 to build new biodiesel plants and expand existing facilities. This spending will increase gross output by $2.8 billion (2005 dollars) to gross output, adding $1.5 billion to America's Gross Domestic Product (GDP). Biodiesel construction will create as many as 11,700 jobs in all sectors of the economy.

Benefits to Farm Prices: The additional demand for soybean oil used to produce biodiesel will increase demand for soybeans, raise soybean prices and revenue for soybean growers, and keep land in soybean production. Analysis published by the U.S. Department of Agriculture indicates that every 50 million gallons of biodiesel raises soybean prices one percent. Consequently, this will have a positive farm level impact on income.

Environmental and Health Benefits: Biodiesel Contributes to Cleaner Air and Lifecycle Reductions of Greenhouse Gases

Emissions: Biodiesel is the only alternative fuel to voluntarily perform EPA Tier I and Tier II testing to quantify emission characteristics and health effects. That study found that B20 (20%

[1] "Biodiesel's Contribution to the U.S. Economy"; John M.Urbanchuk of LECG, LLC.

biodiesel blended with 80% conventional diesel fuel) provided significant reductions in the total hydrocarbons; carbon monoxide; and total particulate matter. Typically, emissions of nitrogen oxides are either slightly reduced or slightly increased depending on the duty cycle of the engine and testing methods used. Research also documents the fact that the ozone forming potential of the hydrocarbon emissions of pure biodiesel is nearly 50% less than that of petroleum fuel. Pure biodiesel does not contain sulfur and therefore reduces sulfur dioxide exhaust from diesel engines to virtually zero.

Biodiesel can also help meet national goals for the net reduction of atmospheric carbon: As a renewable fuel derived from organic materials, biodiesel and blends of biodiesel reduce the net amount of carbon dioxide in the biosphere. A study by the U.S. Department of Energy has found that biodiesel production and use, in comparison to petroleum diesel, produces 78.5% less CO2 emissions. Carbon dioxide is "taken up" by the annual production of crops such as soybeans and then released when vegetable oil based biodiesel is combusted. This makes biodiesel the best technology currently available for heavy-duty diesel applications to reduce atmospheric carbon.

Health Effects: Biodiesel is safer for people to breathe. Research conducted in the U.S. shows biodiesel emissions have decreased levels of all target polycyclic aromatic hydrocarbons (PAH) and nitrited PAH compounds, as compared to petroleum diesel exhaust. These compounds have been identified as potential cancer causing compounds.

Energy Balance: Biodiesel helps preserve and protect natural resources. For every one unit of energy needed to produce biodiesel, 3.24 units of energy are gained. This is the highest energy balance of any fuel. Because of this high energy balance and since it is domestically produced, biodiesel use can greatly contribute to domestic energy security.

Regulatory and Public Policy

Two federal policy measures have been extraordinarily effective in stimulating biodiesel's increased production and use. Because of these policy measures, biodiesel is beginning to make an impact on our nation's energy supply. These measures are all working extraordinarily well, but are soon scheduled to expire, and must be continued in order to keep the growth in biodiesel going strong.

First, the biodiesel blenders tax credit, which was part of the restructured Volumetric Ethanol Excise Tax credit or "VEETC" legislation in the JOBS Act of 2004. The new blender's tax credit for biodiesel went into effect in January of 2005. It functions similarly to the ethanol tax credit, and it has been extraordinarily effective to incent the blending of biodiesel into the nation's diesel fuel supply. It has been the primary stimulant since 2005 for the dramatic increase in new plants, jobs, and local investment in biodiesel, bringing economic opportunity to both rural and urban areas.

The second policy measure that has been very effective in energizing biodiesel's growth is the Bioenergy Program. The program was initiated by the USDA in 2000 to stimulate the use of crop surpluses for energy needs. It was memorialized as part of the 2002 Farm Bill. This program provides a production incentive which has been highly effective in the growth of the biodiesel industry. A 2005 OMB Program Assessment Rating Tool or "PART" evaluation reported that the program did an excellent job of stimulating biodiesel growth, and indicated that the program could continue to be effective for the emerging biodiesel industry. The report stated, "Increases in the production of biodiesel indicate a rise in the supply of domestically

produced renewable fuels. It's also an indicator of the viability of the biodiesel industry and its expanded consumption of agricultural commodities."

Other programs have played significant roles in biodiesel's maturity. These initiatives such as the USDA's Biodiesel Education Grant Program have helped increase fuel quality measures, acceptance of biodiesel by engine and equipment manufacturers, petroleum partners, users, and the general public. A recent survey done to benchmark the program's progress showed that the public's awareness of biodiesel rose from 27 percent in August 2004 to roughly 50 percent in 2006. Prior surveys have documented the American public's support for policies that help ensure biodiesel is competitive with petroleum based diesel fuel:

- Four-in-five consumers continue to support a tax incentive that would make biodiesel cost-competitive with regular diesel fuel.
- 88 percent of environmental group leaders and 84 percent of health organization leaders support biodiesel as a transitional fuel, because biodiesel can make an immediate impact on reducing emissions until zero emissions technology is developed.

The emerging biodiesel industry is also subject to unintended consequences of public policy. Amidst all of the positive news and investment going on today, there is one potential threat that we all fear could, in a few short years, severely undermine the economic benefits from a growing biodiesel industry. The Internal Revenue Service has issued their interpretation of the Energy Policy Act's Renewable Diesel Tax Credit provision (section 1346 of the Act) that would allow conventional petroleum refineries to co-produce renewable diesel as part of the traditional refining process utilizing existing infrastructure. This policy if continued could negate the economic gains realized by a vibrant biodiesel industry, as well as stymie investment into the industry which has provided the U.S. some it's most recent expansion in "refining capacity".

Conclusion

Rising crude oil prices and political uncertainties in strategically sensitive regions of the world are focusing the public's attention on the need to enhance our nation's energy security. Biodiesel is a viable option to begin re-taking control of our energy future. There are many market dynamics that are working in favor of the biofuels industry today and which if continue into the future, as anticipated, will provide a bright future not only for the industry but the nation overall.

Biodiesel is and will continue to be a strong player and partner in the growth of the biofuels industry. Biodiesel can be a substantial tool in the nation's overall move toward energy security as it:

- Adds to the distillate fuel pool;
- Adds to U.S. "refining" capacity;
- Directly replaces imported finished diesel fuel;
- Utilizes agricultural products;
- Stimulates rural and urban economies and creates jobs; and
- Helps potentially create new chemical industry jobs and activity

Mr. Chairman, members, we appreciate the opportunity to come before you today on this most critical issue. On behalf of the biodiesel industry, I want to thank you for all of the support you have given not only to the biodiesel industry, but the development of the biofuels industry overall. We look forward to continue working with you in this important endeavor. I would be happy to answer any questions you may have.

Mr. BOUCHER [presiding]. Thank you very much, Mr. Hughes.

Mr. Lampert, we will be pleased to hear from you.

STATEMENT OF PHIL LAMPERT, EXECUTIVE DIRECTOR, NATIONAL ETHANOL VEHICLE COALITION, JEFFERSON CITY, MO

Mr. LAMPERT. Thank you, sir. I appreciate the opportunity.

Mr. Chairman, Ranking Member Hastert, members of the committee, my name is Phil Lampert. I am the executive director of the National Ethanol Vehicle Coalition and we have been doing E–85 before E–85 was cool. Back in 1993, General Motors produced 272 flexible fuel vehicles, very limited in their distribution. At the end of this model year, we will have more than 6 million flexible fuel vehicles on the Nation's highways. The automakers appeared with the President in the Rose Garden March 30 and indicated that if infrastructure was going to be available, that by model year 2012, 50 percent of their total production would be flexible fuel vehicles. A flexible fuel vehicle can run on zero percent alcohol or 85 percent alcohol with no switches to flip, with no characteristics change for the driver, absolutely transparent to the driver.

The issue today is, there are 168,000 locations in our Nation where you can purchase unleaded gasoline. As of this morning, there are 1,182 locations where you can purchase E–85. We obviously need to increase the numbers of E–85 fueling stations. We believe that the most appropriate way to do that is through the additional provision of incentives, not mandates. We do not believe it appropriate to require the petroleum industry or the transportation fuel industry to sell E–85 but rather if we continue to incentivize the sale of that fuel, the entrepreneurs will make the fuel available to customers. We like to say that the majors have never innovated anything, it is the little guys that do, and it is the little guys that will take advantage of the Federal income tax credits that are available today and that we would encourage you to consider as we draft new energy legislation. Today's tax credit provides 30 percent, up to $30,000 of the total cost to build an alternative fueling station. We would suggest that that potentially be reviewed up to 50 percent, maybe 75 percent for a very short period of time.

Second, it doesn't take hundreds of thousands of dollars as many of our colleagues from the API and others would have you think to put in an E–85 fueling system. In most cases, last year our organization helped foot the establishment of 569 new E–85 fueling stations. Each of those was a conversion of a mid-grade product or premium product to use E–85. We assist the vendor with determining whether their equipment can handle E–85. We help them find an organization that can assist them with cleaning the tank. We put on some different equipment. We can do that for less than $5,000. It is not necessary to dig a hole and to build gold-plated E–85 fueling systems and to spend $200,000. I have never in the 1,182 E–85 fueling systems that I have personally been involved with—because our organization has supported through Federal appropriations each of those new stations with marketing materials, with imaging materials, with technical assistance. That is what needs to be provided to the small entrepreneurs. They are the ones

who will find this as a new profit center and they will put it in very voluntary fashion.

Finally, we would believe that additional flexible fuel vehicles could and should be manufactured by the automakers but we do need to look at the financial situation of our domestic three or Detroit three, however, we want to characterize those today. We do not believe that we should require every vehicle to be a flexible fuel vehicle. There is a cost associated with the upgrade to an FFV. It is arguable that is $50 or $500. It is somewhere in between. We believe that additional incentives could and should be made available. I believe the staff provided you some copies of slides.

The last point that I would make, even if we open 15,000 new E–85 fueling stations this year, we will not do that because we do not have the resources to do that. If we had all those facilities and we had all the vehicles, unless the product is priced correctly, a consumer is not going to use it, and I have I think on the last page of that handout a photograph of two stations, one that is pricing E–85 20 percent above the cost of regular unleaded, the other one a picture of an E–85 fueling station, same date that those photographs were taken, one in Minnesota, one in Missouri, where the price of E–85 is 20 percent less than regular unleaded, and we have to acknowledge that there is a BTU deficiency or difference in ethanol. It is simply the chemistry of it. So to make E–85 a mainstream transportation fuel rather than an alternative fuel in the future, we need to address the issue of this BTU differential.

I would be happy to answer any questions, and thank you so much for the opportunity.

[The prepared statement of Mr. Lampert follows:]

Testimony of Phillip J. Lampert
Executive Director
National Ethanol Vehicle Coalition

Before the House of Representatives Subcommittee on Energy and Air Quality

Washington, D.C.
April 18, 2007

Good morning, Chairman Boucher, Ranking Member Hastert, and distinguished members of the Committee, my name is Phillip Lampert and I serve as the Executive Director of the National Ethanol Vehicle Coalition. On behalf of the NEVC, I would like to thank you for the opportunity to appear before you this morning.

The NEVC is the nation's primary advocate of the use of 85% ethanol as a form of alternative transportation fuel. From our headquarters in Jefferson City, Missouri, we have established partnerships across the nation to advance the establishment of fueling infrastructure and promote the use of 85% ethanol as an alternative to the use of petroleum based fuels.

Our members include automakers; state and national corn grower associations; ethanol producers; equipment manufacturers and suppliers; ethanol marketers; the 37 states that comprise the Governors' Ethanol Coalition; farmer cooperatives; chemical and seed companies; petroleum marketers; and individuals. Our focus in regard to the use of ethanol is very narrow in that we concentrate our efforts and resources on advancing the next generation of use of ethanol. My comments this morning will be limited to the use of high level blends such as E85.

As the Chairman and members of the Committee know, motor vehicles produced and sold in the U.S. have been able to use a 10% blend of ethanol for many years. This ethanol is added to our gasoline in a blend of 1 part alcohol to 9 parts gasoline and is used to improve air quality, add octane, and reduce dependence on imported petroleum

The National Ethanol Vehicle Coalition strongly supports the continued growth and development of the use of ethanol as an oxygenate and renewable fuel and we will be supporting efforts to adopt a more robust Renewable Fuels Standard. That stated, the balance of my comments, are directed to higher level blends of ethanol as a form of alternative transportation fuel.

From an initial production of 272 E85 flexible fuel Luminas built by General Motors in 1992, we expect that by Sept. of 2006, more than 6 million flexible fuel vehicles will be operating on the nation's highways. These "flexible fuel vehicles" are capable of operating on any blend of ethanol, from 10% up to 85%, or where ethanol fuels are not marketed, on pure gasoline. Ford, GM, and DCX have within the past several weeks, stated on two occasions that during Model Year, 2012, fully 50% of their vehicles will be FFVs, if the infrastructure to fuel the vehicles is available.

There are no "switches to flip", additional fueling tanks, or other controls needed for these flexible fuel vehicles to be able to operate. The technology is transparent to the driver and most importantly; this flexible fuel capability is provided on these vehicles at no extra cost to the consumer.

Over the past several years, many important public policy issues have been addressed by the Congress and Administration which have significantly advanced the use of ethanol and other forms of alternative transportation fuels. From 2.81 billion gallons in 2003 to the estimated 6.2 billion gallons anticipated in 2007, (source: American Coalition for Ethanol) clearly the production and use of ethanol has shown significant increases. The most important of the public policy initiatives have been the adoption of the Volumetric Ethanol Excise Tax Credit, establishment of the Renewable Fuel Standard, and extension of CAFE Credits to build FFVs.

As of mid April 2007, there are 1,182 operating E85 fueling sites in the nation. While the numbers of E85 fueling stations has doubled each of the past three years, this remains less than 1% out of the total 168,000 public fueling sites in the nation. In order for E85 fuel to become a mainstream form of transportation fuel, additional public policy initiatives are needed.

As part of our legislative priorities for 2007, the NEVC has adopted the following pubic policy statements:

- Mandates and financial incentives. The NEVC opposes mandatory establishment of E85 fueling locations. Mandated establishment of E85 fueling locations is counter productive and will lead to poor pricing, disinterested marketing, lackadaisical vendor performance, undesirable locations and general dissatisfaction by the consumer.

Rather than mandates, we support an expansion of the existing federal income tax credit that is available to support alternative fuel infrastructure. The current credit of 30% up to $30,000 should be increased to 75%/$75,000 for a period of 3 years and then ratchet down to 50% and hence down to 25%.

Many proposals are also being considered by the Congress that would provide the Secretary of the Dept. of Energy huge amounts of funds to establish massive grant programs to build E85 systems. While this may have been needed 4 or 5 years ago, extremely large grants are no longer necessary. The program has moved beyond that era.

The provision of federal largeness in the form of grants paying for all or a substantial portion of an alternative fuel station is not necessary, and in fact can be counterproductive. Lack of financial commitment in a new E85 fueling station brings a lack of commitment to properly price the fuel, lack of interest in ensuring the product meets standards, and a general disinterest in promoting the fuel. During CY 2006, using $1.4 million in federal funds, the NEVC assisted with the establishment of 569 new E85 fueling sites, which is an average cost of less than $2,500 each. During 2006, the Dept. of Energy awarded $5,990,000 in grants to build 166 new E85 fueling stations, an average cost of $36,000 each.

The vast majority of the projects we have supported have been involved with utilization of existing equipment, rather than installation of new equipment. In most cases, a vendor can take a mid grade or premium out of operation and convert that tank and dispenser to sell E85. This can be accomplished at an average cost of approximately $5,000 per site.

These high prices paid by federal funds are not a result of malfeasance, poor management, or lack of oversight. The large amounts of funds that are awarded by the DOE to build E85 fueling stations are the result of the process of federal project competition. The bureaucracy has established a competitive process that awards "gold plated systems", that is not transparent in regard to the entire evaluation system, and for which there is little recourse in regard to why one project was funded and another not.

It is simply not necessary for DOE to provide these large grants, some in excess of $50,000 per site. Add to these grants the federal income tax credit and various other state grants and credits, and the government investment comprises a significant amount of the total investment. This is not, in our opinion, a wise use of resources. It is not our intent to speak ill of the Dept. of Energy, however, the example that I have cited is indicative of how the costs of a project/program is the subject of the multiplier effect when the bureaucracy becomes engaged.

Fuel Pricing: For E85 to become a mainstream fuel, it is going to be necessary to address the pricing of the product in comparison to that of unleaded gasoline. The chemistry of ethanol is that it contains less latent heat value than does regular unleaded gasoline. Thus, one gallon of E85 will only provide 73% of the BTUs that are found in RUL. To have E85 and RUL priced the same is not appropriate as a user will indeed loose fuel mileage, not fuel economy, but fuel mileage.

The National Ethanol Vehicle Coalition believes that E85 should be priced 20% less than RUL on a daily basis. Such pricing will address 95% of the drivers that will loose fuel mileage. If the price of E85 is not less than RUL, we tell drivers not to use it.

Finally, technical support, marketing information, consumer education, promotional materials, and other forms of data are now the most critical needs of a vendor which has an interest in opening of an E85 fueling station.

- Please keep in mind when we talk about the establishment of E85 fueling systems, we are talking about working with the small entrepreneurs, the small business men and woman. These are the innovators in the transportation fuel industry, but at the same time, these are the companies least prepared to enter into a new form of fuel sales. It is not the major oil companies with their teams of marketing staff, affinity credits cards, or full page adds in the newspapers of national circulation that are the innovators. As a representative of the Minnesota Petroleum Marketers once said, **'No *major* has ever innovated anything . . . It's the little guys that do'**
- That said, the little guys needs support technical assistance, marketing information, a hotline to call, and a person that can answer questions. This is another of the roles of the National Ethanol Vehicle Coalition.

Let me reiterate, to advance the growth of E85 fueling systems, we believe the following are needed:

- An increase in the federal income tax credit.
- Reductions in large grants with a much stronger emphasis being placed on provision of personal technical support, marketing support, and promotional assistance.
- Finally, the potential increase in the existing incentive that is available for ethanol to reflect the lower BTU value of the product.

Mr. Chairman and Members of the Committee, there has been much progress made and the Congress is currently addressing other important issues relating to

ethanol utilization. We appreciate and applaud these efforts and stand ready to assist.

Thank you for the opportunity to provide these comments.

The National Ethanol Vehicle Coalition is a non-profit organization located in Jefferson City, MO.

Mr. BOUCHER. Thank you very much, Mr. Lampert.

Dr. Farrell, we will be pleased to hear from you.

STATEMENT OF ALEXANDER E. FARRELL, ASSISTANT PROFESSOR, ENERGY AND RESOURCES, AND DIRECTOR, TRANSPORTATION SUSTAINABILITY RESEARCH CENTER, BERKELEY, CA

Mr. FARRELL. Thank you, Chairman Boucher, and Chairman Boucher, on behalf of myself and UC Berkeley, I extend our condolences to the students and the staff and the faculty at Virginia Tech.

Chairman Boucher, Ranking Minority Member Hastert and members of the subcommittee, thank you for the opportunity to come and talk with you today about alternative fuels. My main point today is that the United States must act to address all three challenges in the transportation fuel sector, strategic, economic and environmental, or it faces the prospect of failing to solve any of them.

My second point is that by themselves, requirements for alternative or renewable fuels are inadequate and can even make the problem worse. Strong environmental regulation is required to ensure good environmental performance. As was mentioned earlier, alternative fuels are not all created equal and they can either improve or degrade the environment. Research from my group shows that the current set of laws and regulations do not give the private sector adequate incentive to produce environmentally friendly fuels. But it is my belief that the American energy and agriculture industries can do so if properly motivated.

My third and final point is that a sectoral approach to managing greenhouse gas emissions will be far more successful in addressing the three challenges in transportation fuels than a single economy-wide approach. I will mention one such policy, California's low fuel carbon standard, and I will invite subcommittee members to attend an international symposium on this topic at the Lawrence Berkeley National Laboratory to be held on May 18 to discuss how this policy may be implemented.

For reference, I am an assistant professor of energy and resources at the University of California Berkeley and director of the Transportation Sustainability Research Center. I published over two dozen peer-reviewed papers and journals such as Science, Energy Policy and Environmental Science and Technology. While most of my recent work is on energy and climate change policy, as a graduate of the U.S. Naval Academy and former submariner, I can assure you that I take national security very seriously. My background is why I find current policy so disappointing. Two important goals of the United States, national security and economic growth, are frustrated by failing to act responsible on environmental protection and in particular on climate change. Let me be clear: failing to adequately address climate change increases the national security and economic risks facing America.

A transition in transportation energy has begun. This transition involves a shift to alternative fuels as substitute for conventional petroleum and it is critical to understand and manage the three risks that this transition will bring. Importantly, this is an inte-

grated problem. As we act to achieve one goal, we unavoidably affect our prospects in dealing with the others.

Some aspects of the security implications of alternative fuels are obvious. Energy security is enhanced by diversifying both the types of resources we use and the geographic locations they come from. However, there is more to it. Developing alternative fuels without a strong climate change policy brings additional strategic risk. Specifically and directly, this is because climate change itself presents strategic risk as has been noted recently by CNA Corporation study and others. In addition, continuing to ignore climate change will make the national consensus on energy policy more difficult to achieve, delaying any policies that might reduce our strategic risks. And finally, the current path also tends to encourage disrespect for international processes and disrespect for international agreements on common problems which lessens the security of all countries, United States included. Regarding the economic risks, many of these have been mentioned. They are largely complementary. In my view the key economic policy of alternative fuels is how to manage the complementary risks to consumers and investors.

Environmental risks posed by the production and use of alternative fuels are, has been mentioned, quite many. This includes water use, soil erosion, land disturbance such as mountaintop removal, air pollution, land use and many other issues. In this testimony, I will focus only on the risks of climate change due to greenhouse gas emissions. All alternative fuels entail tradeoffs among positive and negative environmental effects and amongst cost and convenience as well. I believe you were distributed a color copy of figure 1, which is on page 3 of the written testimony. This provides some representative values for the life cycle greenhouse gas emissions of three categories of fuels: fossil-based liquid hydrocarbons, which are on the left, biofuels in the center, and electricity on the right. To focus on the fuel qualities themselves, these values hold vehicle technology constant so the same vehicle is using the fuels. In this figure, emissions from different sites of activities are shown differently. So for instance, you can see that gasoline made from petroleum, upstream emissions which are caused by crude oil production, transport and refining are equal to about 50 grams per mile while tailpipe emissions are over 180 grams per mile, and I would also note in passing there are a number of caveats and notes to this figure. What figure 1 most importantly illustrates is that there is no automatic relationship between any particular fuel and greenhouse gas emissions. It all depends on how the fuel is made. Gasoline produced from tar sands, for instance, has emissions about 25 percent higher than gasoline made from ordinary petroleum and coal-to-liquids have emissions that are about 75 percent higher. As has been noted, greenhouse gas emissions made from tar sands and coal-to-liquids could be about the same as those from conventional gasoline production if much of the upstream emissions were captured and sequestered using CCS technology but they would not get much better than ordinary petroleum.

Therefore, the use of fossil-based alternative fuels in a way that addresses all three challenges, strategic, economic and environmental, will require careful consideration and balancing. For instance, the requirement that all fossil-based alternative fuels use

CCS and have in addition their greenhouse gas emissions accounted for in a mandatory planet policy would enhance domestic energy production——

Mr. BOUCHER. Dr. Farrell, if you could wrap up in just a bit. You are well over your 5 minutes.

Mr. FARRELL. I apologize.

Mr. BOUCHER. Thank you.

Mr. FARRELL. Encourage technological innovation and signal to other countries that the United States is taking its area in this responsibility seriously.

Thank you very much.

[The prepared statement of Mr. Farrell follows:]

Alexander E. Farrell

Assistant Professor, Energy and Resources Group
Director, Transportation Sustainability Research Center
University of California Berkeley, CA 94720-3050
http://erg.berkeley.edu/
http://www.its.berkeley.edu/sustainabilitycenter

Testimony to the House Subcommittee on Energy and Air Quality
April 18, 2007

Introduction

Chairman Boucher, Ranking Minority Member Hastert, and other members of the House Subcommittee on Energy and Air Quality, thank you for the opportunity to come to talk with you today about alternative fuels. **My main point today is that the United States must act to address all three of the challenges in the transportation fuel sector—strategic, economic, and environmental—or it faces the prospect of failing to solve any of them (Farrell and Brandt 2006).**

My second point is that by themselves, requirements for "alternative" or "renewable" fuels are inadequate and can even make the problem worse; strong environmental regulation is required to ensure good environmental performance. Alternative fuels are not created equal and can either improve or degrade the environment (Farrell, Plevin et al. 2006). Research by my group shows that the current set of laws and regulations do not give the private sector adequate incentives to produce "green" fuels, but that the American energy and agriculture industries can do so if properly motivated (Turner, Plevin et al. 2007). **My third and final point is that a sectoral approach to managing greenhouse gas emissions will be far more successful in addressing all three challenges in transportation fuels than a single economy-wide approach.** I will mention one such approach, California's Low Carbon Fuel Standard and invite Subcommittee members to attend an international symposium on this topic at the Lawrence Berkeley National Laboratory on May 18th.

For reference, I am an Assistant Professor of Energy and Resources at the University of California Berkeley and Director of the Transportation Sustainability Research Center. I am also a member of the National Science Foundation-sponsored Climate Decision Making Center and of California's Economic and Technology Advancement Advisory Committee under AB32, the California Global Warming Solutions Act. I have published over two dozen peer-reviewed papers in journals such as *Science, Energy Policy,* and *Environmental Science & Technology.* While most of my recent work is on energy and climate change policy, as a graduate of the U.S. Naval Academy and former submariner, I can assure that I take national security very seriously.

This background is why I find the current policy failures are so disappointing, two important goals of the United States—national security and economic growth—are frustrated by failing to act responsibly on environmental protection, and in particular on climate change. **Let me be clear, failing to adequately address climate change increases the national security and economic risks facing America.** I hope my comments today can help the Subcommittee better understand the problem and what we can do about it.

Three challenges in transportation fuels

A transition in transportation energy production has begun; transportation fuels are increasingly coming from sources other than conventional petroleum. The development of tar sands in Alberta is one example, yesterday's announcement by ConocoPhillips and Tysons of new renewable diesel production is another. This transition involves a shift to alternative fuels that substitute for conventional petroleum, and it is critical to understand and manage the strategic, economic, and environmental risks this transition will bring. This as an integrated problem, as we act to achieve one goal we unavoidably affect our prospects in dealing with the others.

Alternative fuels include low-grade and synthetic petroleum (e.g. tar sands and coal-to-liquids, or CTL), biofuels, electricity and hydrogen. It is important to recognize that whatever the course of development of biofuels, electric vehicles, and hydrogen, the fossil portion of the liquid fuels will become increasingly supplied by low-quality and synthetic petroleum because we have enormous, readily accessible resources and we have the technologies to turn them into fuel. Currently, fossil-based alternative fuels equal about 2.5 million barrels per day (Mbbl/d), of which the largest portion is tar sands and extra-heavy oil production, and experts forecast global additions of SCPs by 2010 to be almost 0.5 Mbbl/d annually (National Energy Board 2004; Lynch 2005; Moritis 2006; Simbeck 2006). Thus, fossil-based alternative fuels now account for about 3% of global oil production and could double within the next five years. These fuels have much higher GHG emissions than does conventional petroleum.

Some of the strategic implications of alternative fuels are obvious, by diversifying both the types of resources and the geographic locations they come from, we apply the first principal of energy security (Yergin 2006). **Moreover, developing alternative fuels without a strong climate policy framework brings additional strategic risks.** This is because climate change itself presents strategic risks and failing to address climate change increases these risks (Holdren 2001; CNA Corporation 2007). In addition, continuing to ignore climate change will make national consensus on energy policy more difficult, delaying the implementation of alternative fuel development and thereby delaying any reduction in strategic risks and tend to encourage disrespect for international processes and agreements on common problems. This lessens the security of the United States directly and also inhibits the development of the global agreement necessary to solve the climate change problem.

Because alternative fuels require greater initial capital per unit of production relative to conventional oil, and are also more expensive in the long run, they are financially risky to investors and may become uneconomical should oil prices fall, as they have in the past. On the other hand, consumers face the prospect of high and variable fuel prices. Thus, the key economic risk of the oil transition is how to manage the complementary risks to consumers and investors. **Government policies to mitigate some economic risks may be needed, but they should involve moderate costs and should also address environmental or strategic risks. And if such policies involve subsidies or payments of some sort, they should not tax current income or borrow (further) from future generations, they should come from taxes that serve to solve the problem. Thus, any policy to mitigate the economic risks of alternative fuels should be paid for by a carbon tax.**

The environmental risks posed by the production and use of alternative fuels are myriad, including water use, soil erosion, land disturbance (e.g. moutaintop removal), air pollution, and many other issues. In this testimony, I will focus only on the risks of the climate change due to greenhouse gas emissions, which are addressed in some detail in the next section.

The current uncertainty associated with climate change policy only adds to these risks by making it difficult for firms and investors to make long-term decisions about energy investments (Echeverri 2003; United States Climate Action Partnership 2007). The absence of a national climate policy also inhibits investment and innovation in new technologies, which is a critical aspect of solving the climate change problem (Margolis and Kammen 2001; Rubin, Taylor et al. 2004; Taylor, Rubin et al. 2006).

Greenhouse gas emissions of alternative fuels.

All alternative fuels entail tradeoffs among positive and negative environmental effects, and among cost and convenience as well. Figure 1 illustrates the lifecycle greenhouse gas (GHG) emissions of three categories of fuels, fossil-based liquid hydrocarbons (on the left), biofuels (in the center), and electricity (on the right). Lack of data (and space) kept me from including hydrogen today.

Figure 1 illustrates that there is no automatic relationship between any particular fuel and GHG emissions, it depends on how that fuel is produced. These values are estimates because the GHG emissions of fuels are not measured today.

However, we can say a few things about specific fuels. **First, fossil-based liquid hydrocarbons have significant tailpipe emissions due to the fact that the carbon atoms in those fuels were locked in fossil formations until just a few weeks before being used.** There's just no way around it. However, the "upstream" emissions from production and refining are a different matter. Some of those emissions, possibly a large fraction, could be captured and sequestered using CCS technologies, although these are not yet commercialized (Intergovernmental Panel on Climate Change 2005). Successful development of safe, cost-effective CCS technologies is an important goal, and multiple large scale demonstration projects are likely to help the United States address the challenges in transportation fuels as well as lower GHG emissions associated with coal-fired electricity (Katzer 2007). However, because CCS technologies increase the cost of fuel production without adding value to a firm's production, they will not be implemented without a mandatory climate policy, so this is needed in addition to research and development efforts.

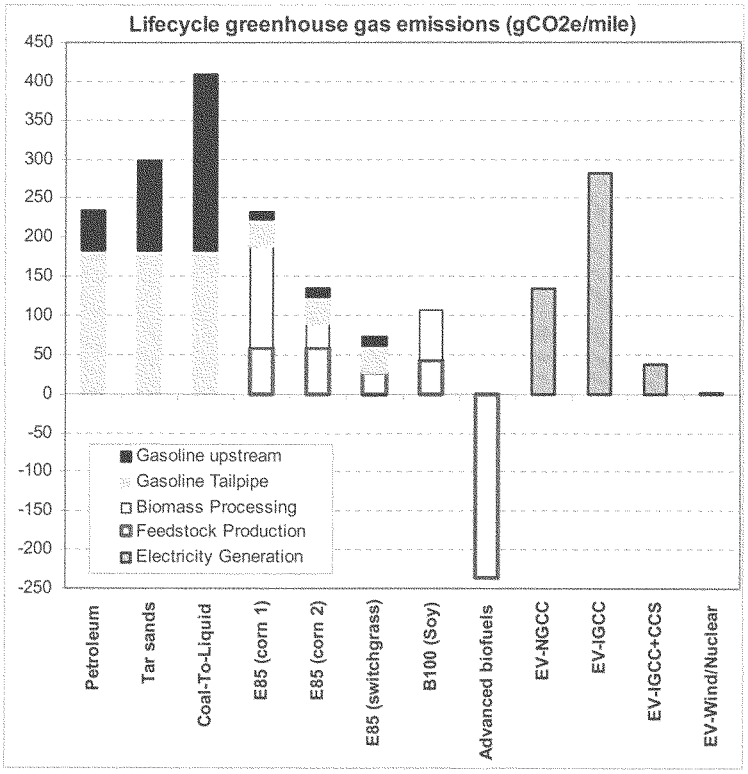

NOTES:

a) Petroleum, Tar Sands, and Coal-To-Liquid values are from (Brandt and Farrell 2006). Upstream values here are averages over of values reported in the literature, actual emissions from values will vary. If applied, carbon capture and sequestration (CCS) technologies may capture some upstream emissions.

b) Ethanol and Biodiesel values are from (Turner, Plevin et al. 2007), which uses a modified version of GREET v1.7. This model does not fully account for land use and other effects, so actual greenhouse gas emissions may be higher. Corn 1 is based on a dry mill using coal. Corn 2 is based on the best technology currently in use today, a dry mill using biomass for energy supply.

c) Advanced Biofuel values are from (Tilman, Hill et al. 2006) but these technologies are not yet proven. Actual GHG emission rates may vary significantly from the values shown.

d) Electric Vehicle (EV) values are from (Arons, Lemoine et al. 2007). NGCC is natural gas combined cycle, IGCC is integrated coal gasification and combined cycle.

e) In order to focus on fuels, all calculations assume identical plug-in hybrid electric vehicles per (EPRI 2002). These technologies are not yet commercialized. Emission rates will be higher for liquid fuels used by conventional vehicles.

f) These data are available at http://erg.berkeley.edu/erg/people/faculty/farrell_publications.shtmlr

The use of CCS technologies is no panacea, however. **The GHG emissions of fuels made from tar sands and coal-to-liquids could be about the same as from conventional gasoline production if CCS technologies are used, but not much better.** Further emission reductions that could come about because of vehicle technologies are not linked to these alternative fuels, they could apply to conventional gasoline and other alternative fuels as well. Figure 1 holds the vehicle technologies constant to illustrate the actual comparison among fuels. Therefore, the use of fossil-based alternative fuels in a way that addresses all three challenges–strategic, economic, and environmental–will require careful consideration and balancing.

Figure 1 also shows that there is an enormous range of potential GHG emissions from biofuels. These emissions come not only from the gasoline that is blended into some biofuels, but also from production of feedstocks (e.g. corn) and processing of the biofuels (e.g. fermentation) (Farrell, Plevin et al. 2006; Kim and Dale 2006). The two values for corn-ethanol-based E-85 (85% ethanol by volume) represent approximately the most GHG-intensive ethanol produced in the United States today, and the least (Turner, Plevin et al. 2007). The lower value assumes biomass is used to power the bio-refinery, as several are doing today so no technological innovation would be required to achieve these levels. Similar for soy biodiesel. In contrast, the values for switchgrass-based E85 and "Advanced Biofuels" assume advances in technology and can result in very low or even negative GHG emissions (Wyman 2003; Morrow, Griffin et al. 2006; Tilman, Hill et al. 2006). Negative emissions come about because these feedstocks are perennial grasses that sequester carbon in the soil when they grow, improving it's health along the way. It is not clear how large these resources might be, due to competition for land, but residues and wastes might also be used to produce biofuels at significant scales (Broder, Harris et al. 2001; Martin and Chester 2006). There is some controversy over the "Advanced Biofuels" concept (which has various names) but this seems like a potentially valuable area for future research.

However, because the environmental performance of biofuels is not measured today, consumers have no information about how to buy biofuels with low GHG content and supplier have no incentives to lower the GHG content of biofuels. **In my view, the American agriculture and energy industries can certainly develop and market affordable, low-GHG and sustainable biofuels, but only if given the appropriate regulatory and incentive structure, including mandatory GHG emission controls.** Without appropriate information, incentives and rules, however, the biofuels industry is likely to expand production in environmentally harmful ways.

One possibility that is not shown on Figure 1 is to combine Coal-To-Liquids with both CCS and Advanced Biofuels (Williams, Larson et al. 2006). By combining both geological and soil sequestration, it might be possible to manufacture large volumes of fuel with very low GHG emissions. **The combination of Coal-To-Liquids with both CCS and Advanced Biofuels is a relatively new concept that includes several uncommercialized technologies and its prospects are quite uncertain, but, in my view, it merits significant investigation.**

Finally, Figure 1 shows the GHG emissions from the use of electricity as a fuel (Arons, Lemoine et al. 2007). **As with the other fuels, there is no automatic linkage between electric vehicles and GHG emissions, it depends on how the power is generated.** However, the very low GHG

emission rates of some technologies might make electric vehicles (whether plug-in hybrids or pure battery) attractive options. In addition, EVs offer a significant opportunity to diversify transportation energy supplies and source more of this energy domestically, which can help reduce strategic and economic risks. Interestingly, America's abundant coal resources might be better used as a transportation fuel through the use of CCS technologies in electric power generation and the use of EVs. This requires advances in battery technologies to enable electric vehicles to become widely used (Lemoine, Kammen et al. 2006). Opinion about the prospects of such innovations differ (EPRI 2001; EPRI 2002; Carlsson and Johansson-Stenman 2003; Schafer and Jacoby 2006). **Nonetheless, EVs offer such significant benefits that research and development in this area also seems very appropriate.**

Managing greenhouse gas emissions

A prerequisite to controlling GHGs, and therefore to any mandatory climate policy, is cost-effectively measuring GHG emissions. This is likely to include imperfections and uncertainties, especially at first, but this is true for any activity and should not stand in the way of implementing climate policy.

Because the environmental performance of fuels is not measured today, consumers have no information about how to buy low-GHG fuels and producers have no incentive to produce and market them. To solve this problem, The first step toward markets for low-GHG fuels is to develop methods for measuring the global warming impact of fuel production and use. Several official processes for evaluating individual biofuels in a regulatory framework are currently under development around the world, including the United Kingdom's Renewable Transport Fuels Obligation (http://www.dft.gov.uk/pgr/roads/environment/rtfo/) and the Low Carbon Transport Fuels Standard in California (http://www.its.berkeley.edu/sustainabilitycenter/carbonstandards.html). The Renewable Fuel Standard could be adapted and extended for measuring the global warming impact of transportation fuels in the United States (http://www.epa.gov/otaq/renewablefuels/). To do so might require extending the Renewable Identification Numbers (RINs) established in this rulemaking to more general Fuel Information Numbers (FINs). This is feasible today and would produce meaningful results. While there would still be uncertainties, these are insufficient to justify not starting a GHG emission measurement system.

If the GHG emissions associated with transportation fuels can be measured, than they can be managed. This is a major task. Very large reductions in GHG emissions will be required to avoid more than doubling GHG concentrations in the atmosphere and the harmful effects that are likely to follow (Wigley, Richels et al. 1996; Hayhoe, Cayan et al. 2004; Stern, Peters et al. 2006; Intergovernmental Panel on Climate Change 2007). I will use the year 2020 as a reference point between near-term and long-term goals.

Technologies to accomplish this task are not currently available, so technological innovation is a necessary component of the strategy to achieve climate stabilization (Taylor, Rubin et al. 2006). These changes will not come about without some form of government action, because avoiding dangerous climate change, like most environmental protection, is a public good

and so under-provided by markets. Innovation designed to achieve public goods typically requires government action (Arrow, Bolin et al. 1995; Norberg-Bohm 1999). Any such large change will affect many other key priorities, including economic growth, improved air quality, affordable energy prices, environmental justice, energy source diversification, environmental protection and others. This frames the specific goals that national climate policy meet:

1. Encourage investment and improvement in current and near-term technologies to meet long-term goal of cost-effective emission reductions through about 2020.
2. Stimulate innovation and development of new technologies that can help attain the long term goal 2050 of dramatically lowering GHG emissions at low costs, reducing emissions by 75% or more by 2050.
3. Maximize the attainment of related objectives as much as possible, including economic growth, air quality and other environmental protection goals, affordable energy prices, environmental justice, diverse and reliable energy sources, and others.

An important policy choice is whether to address these goals through a single, economy-wide approach, as is sometimes suggested, or through a multi-sectoral approach that also covers the entire economy but does so with more targeted policies. A sectoral approach has been adopted in California (Schwarzenegger 2005; 2006). California's multi-sectoral approach to climate policy also includes sector-specific policies in electricity, manufacturing, transportation, and others (Climate Action Team 2006). Some of these are regulatory, others may be market-based. One of these proposed policies is a Low Carbon Fuel Standard (LCFS) in which transportation fuel providers would be required to lower the global warming impact of their products.

The sectoral approach is important in part because it may better achieve all three goals described above, compared to an economy-wide approach that addresses all emissions with a single policy, such as a cap-and-trade system. Each of the goals is discussed in turn.

In an idealized case, an economy-wide approach would be efficient at achieving the first goal of reducing GHG emissions up to 2020. But because the real world entails imperfect information, transaction costs, differential taxes, different regulation (e.g. competitive industries like the oil sector, and regulated utilities like the electric power sector) and other less-than-ideal conditions, an economy-wide approach would be suboptimal. This suggests that the efficiency disadvantages of a sectoral approach might be less important than when considering a hypothetical ideal economy. However, sectoral policies should still be designed to be as economically efficient as possible.

A sectoral approach is significantly better than an economy-wide approach at achieving the second goal, technological innovation, because 1) social discount rates are much lower than private discount rates, 2) research into environmental technologies is a public good, and, 3) the sectors vary enormously in terms of industrial organization, GHG mitigation costs, capital structure, taxes, regulation, and other factors (Norberg-Bohm 1999; Taylor, Rubin et al. 2006). Each of these three reasons is briefly discussed in turn.

Private discount rates for decisions like business investments, vehicle purchases, home improvements, and so forth are often 15% or more, compared to social discount rates are often

estimated to range from zero up to 7% (U.S. Environmental Protection Agency 2000; Moore, Boardman et al. 2004). Higher discount rates imply, in this case, that consumers and firms would place more weight on current costs and less on potential future benefits of innovation, compared to society's preferences. Thus, even in an idealized world, a single economy-wide approach to reducing GHG emissions would be inefficient from a social standpoint because inadequate amounts of innovation and investment in new technologies would be made.

Compare, for instance, the electricity and transportation sectors. In the former, multiple energy sources with very different (and some very low) GHG emission rates compete, including renewable and nuclear power, natural gas, and coal, as shown in Table 1. Thus, even relatively minor increases in the cost of emitting GHGs would begin to affect the operation of and investment in the electric power sector. For prices up to about $25 per metric ton (MT) of CO_2 this effect is likely to be minor; nuclear and renewable power would become relatively less expensive, but coal-fired electricity would remain cheaper still (Katzer 2007). However, at about $25 per MT-$CO_2$, carbon capture and storage (CCS) is currently projected to become less expensive than an ordinary pulverized coal power plant. Of course, predictions of environmental compliance costs have historically and almost universally been much too high, so we should imagine sequestration costs falling over time. In any case, because of these cost and GHG differences among different electricity supply options, at CO_2 prices over $25 per MT-$CO_2$ an enormous amount of innovation and change in investment is likely in electricity supply, potentially setting it up for successful decarbonization after 2020.

Table 1: Effect of a $25/MT CO_2e price on energy prices

Energy type	Price change and percentages of retail prices	
Electricity		
Nuclear and renewables	<$0.1/MWh	<1%
IGCC with CCS	$02.5/MWh	2%
NGCC	$12.5/MWh	11%
Pulverized coal	$20/MWh	17%
Transportation		
Gasoline	$0.21/gallon	8%
Heating		
Natural gas	$1.27/million Btu	11%

Notes: Percentages are for retail prices in California including PG&E residential electricity $0.1144/kWh, gasoline $2.50/gallon, and PG&E residential gas $1.14/therm. Electricity values calculated from (Pacca and Horvath 2002). Gasonline and Natural Gas values calculated from the Energy Information Agency's emission coefficients. See http://www.eia.doe.gov/oiaf/1605/coefficients.html

However, the other main sources of GHG emissions do not have such ready low-GHG substitutes. In transportation, essentially all fuels are based on petroleum. In an economy-wide system that induced significant change in the electric power sector, prices for gasoline might rise by less than 10%. Consumers appear to be very insensitive to changes in gasoline prices, at least in the short term (Hughes, Knittel et al. 2006). Transportation costs are a very small fraction of the cost of goods sold, so increases of this size are unlikely to reduce consumer demand for goods. Therefore, a 10% change in price might induce some changes in transportation energy

supply, possibly a switch to lower GHG biofuels to lower costs, or the introduction of larger amounts of low-GHG biofuels into the fuel supply, but such increases would be too small to induce significant reductions in transportation demand, either mobility or logistics. Further evidence that 10% increases in fuel prices would spur little innovation in the transportation sector can be found in Europe. Higher prices than this have prevailed in Europe for some time, which has led to the use of smaller and more efficient vehicles (including many diesels), but not the introduction of low-carbon fuels. (Note, however, that European fuel taxes do not differentiate by carbon content.)

Further complicating issues is the fact that changes to transportation fuels involve severe coordination and investment problems between infrastructure and vehicles (Winebrake and Farrell 1997). Both experience and analysis suggest that transitions to new fuels are slow and difficult and that only one or two fuels may be significant at any time and place, in part because of cost of distribution infrastructure (Leiby and Rubin 2004; McNutt and Rodgers 2004). This effect partly explains why ethanol has gained relatively large market penetration (and biodiesel in Europe) because it can be blended in gasoline (or diesel) and at low blends requires no changes in vehicles or distribution infrastructure. Plug-in hybrid vehicles are more difficult in this sense because new vehicle technologies are needed (e.g. less expensive batteries and power electronics), but probably little in the way of new infrastructure other than appropriate meters and chargers. Hydrogen is perhaps most difficult because it requires both a new fuel distribution system and new vehicle technologies. Thus low-carbon fuels that can use existing capital seem to have a strong advantage.

The key point, however, is that the costs of reducing GHG emissions may be highest in the part of the U.S. economy that has the largest GHG emissions (transportation) and a single, economy-wide GHG policy runs the very significant risk of inducing very little technological innovation in that sector. This argues for a sectoral approach to national climate policy.

The Lawrence Berkeley National Laboratory will host a one-day international symposium on the Low Carbon Fuel Standard on May 18th, to discuss the technical and policy issues. http://www.its.berkeley.edu/sustainabilitycenter/carbonstandards.html

Conclusions

There are three types of risks in transportation fuels – strategic, economic, and environmental and it is critical in any transition to alternative fuels to understand and manage them as an integrated system. As we act to achieve one goal we unavoidably affect our prospects in dealing with the others. In terms of greenhouse gases, there is no automatic relationship between any particular fuel and GHG emissions, it depends on how that fuel is produced. Therefore, developing alternative fuels without a strong climate policy framework brings additional economic and strategic risks, as well as environmental risks.

The GHG emissions of fuels made from tar sands and coal-to-liquids could be about the same as from conventional gasoline production if CCS technologies are used, but not much better.

Therefore, the use of fossil-based alternative fuels in a way that addresses all three challenges–strategic, economic, and environmental–will require careful consideration and balancing. For instance, a requirement that all fossil-based alternative fuels use CCS and have their GHG emissions accounted for in a mandatory climate policy would encourage technological innovation and signal to other countries that the United States was taking its responsibilities in this area seriously.

There is an enormous range of potential GHG emissions from biofuels. In my view, the American agriculture and energy industries can certainly develop and market affordable, low-GHG and sustainable biofuels, but only if given the appropriate regulatory and incentive structure, including mandatory GHG emission controls. The combination of Coal-To-Liquids with both CCS and Advanced Biofuels is a relatively new concept that includes several uncommercialized technologies and its prospects are uncertain, but, in my view, it merits significant investigation.

Electricity and hydrogen offer yet further options and because these fuels can be made from a wide range of carbon-free energy sources, so they offer exciting possibilities. Unfortunatley, they are not yet economic, so research and development may be the most important approaches for these fuels. Of course, a climate policy would hasten the day that they do become economic and can start being widely used.

A prerequisite to controlling GHGs, and therefore to any mandatory climate policy, is cost-effectively measuring GHG emissions. This is likely to include imperfections and uncertainties, especially at first, but this is true for any activity and should not stand in the way of implementing climate policy. Because the environmental performance of fuels is not measured today, consumers have no information about how to buy low-GHG fuels and producers have no incentive to produce and market them. To solve this problem, a mandatory climate policy that includes measuring the global warming impact of all fuels is needed. Such a policy should not be a single, economy–wide effort, but one that focus on the transportation sector. The most important reason for a sectoral approach is to stimulate technological innovation, and is needed because 1) social discount rates are much lower than private discount rates, 2) research into environmental technologies is a public good, and, 3) the sectors vary enormously in terms of industrial organization, GHG mitigation costs, capital structure, taxes, regulation, and other factors

Understanding the relationship between agricultural practices and environmental performance is the inescapable foundation of a healthy market for low-GHG fuels. Much more research is needed to develop and refine the assessment methods by which these relationships are established and communicated. The goal should be a robust, transparent, and accessible modeling framework that will allow regulators to understand the continuous differentiation of performance and will allow producers to accurately predict, and innovate upon, the effect of practices on value production. Further, several outstanding issues remain largely unexplored, creating significant uncertainties in current assessment systems. These include biomass residues from conventional forest systems, and indirect effects caused through market interactions in food, fuel, and other commodities. These indirect effects may have significant implications for land use, so this is a particularly important area for research.

Acknowledgements
The research that supports this testimony was partially supported by the National Science Foundation's Climate Decision Making Center at Carnegie Mellon University (SES-034578), the Energy Foundation, and the Natural Resources Defense Council. Numerous individuals contributed to these efforts, including Rich Plevin, Adam Brandt, Brian Turner, Andy Jones, Sam Arons, Derek Lemoine, Marc Melaina, Mike O'Hare, Dan Sperling, Michael Hanemann, Dan Kammen, and others. However the views and opinions herein, as well as any remaining errors, are those of the author's alone and do not necessarily represent the views of sponsors or colleagues.

References

(2006). AB 32: California Global Warming Solutions Act of 2006. California Health and Safety Code.

Arons, S., D. Lemoine, et al. (2007). Energy and Climate Implications of Plug-In Hybrid Electric Vehicles. Energy and Resources Group. Berkeley, University of California.

Arrow, K., B. Bolin, et al. (1995). "Economic Growth, Carrying Capacity, and the Environment." Science **268**: 520-521.

Brandt, A. R. and A. E. Farrell (2006). "Scraping the bottom of the barrel: CO2 emissions consequences of a transition to low-quality and synthetic petroleum resources." Climatic Change **Forthcoming**.

Broder, J. D., R. A. Harris, et al. (2001). "Using MSW and industrial residues as ethanol feedstocks." Biocycle **42**(10): 23-26.

Carlsson, F. and O. Johansson-Stenman (2003). "Costs and benefits of electric vehicles - A 2010 perspective." Journal of Transport Economics and Policy **37**: 1-28.

Climate Action Team (2006). Report to Governor Schwarzenegger and the Legislature. 2005-06_GHG_STRATEGIES_FS.PDF. Sacramento, California Environmental Protection Agency: 107.

CNA Corporation (2007). National Security and the Threat of Climate Change. Washington, DC: 62.

Echeverri, D. P. (2003). The Cost of Regulatory Uncertainty in Air Emissions For a Coal-Fired Power Plant. Carnegie Mellon Electricity Industry Center. J. Apt. Pittsburgh, PA.

EPRI (2001). Comparing the Benefits and Impacts of Hybrid Electric Vehicle Options. Palo Alto, EPRI.

EPRI (2002). Comparing the Benefits and Impacts of Hybrid Electric Vehicle Options for Compact Sedan and Sport Utility Vehicles. Palo Alto, EPRI: 86.

Farrell, A. E. and A. R. Brandt (2006). "Risks of the Oil Transition." Environmental Research Letters **1**(0104004): 6.

Farrell, A. E., R. J. Plevin, et al. (2006). "Ethanol Can Contribute to Energy and Environmental Goals." Science **311**(5760): 506-508.

Hayhoe, K., D. Cayan, et al. (2004). "Emissions pathways, climate change, and impacts on California." Proceedings of the National Academy of Sciences **101**(34): 12422-12427.

Holdren, J. (2001). "Editorial: Meeting the Energy Challenge." Science **291**: 945.

Hughes, J. E., C. R. Knittel, et al. (2006). Evidence of a Shift in the Short-Run Price Elasticity of Gasoline Demand. Institute of Transportation Studies. Davis, University of California: 32.

Intergovernmental Panel on Climate Change (2005). IPCC Special Report on Carbon dioxide Capture and Storage. Cambridge, University of Cambridge Press.

Intergovernmental Panel on Climate Change (2007). Climate Change 2007: Impacts, Adaptation, and Vulnerability. Fourth Assessment Report

Katzer, J. (2007). The Future of Coal. Cambridge, MA, MIT: 175.

Kim, S. and B. E. Dale (2006). "Ethanol fuels: E10 or E85 - Life cycle perspectives." International Journal of Life Cycle Assessment **11**(2): 117-121.

Leiby, P. N. and J. Rubin (2004). Understanding the Transition to New Fuels and Vehicles. The Hydrogen Energy Transition. D. Sperling and J. Cannon. San Francisco, Elsevier: 191-211.

Lemoine, D., D. M. Kammen, et al. (2006). "Effects of PHEVs on Electricity and Gasoline Markets." **Under review**.

Lynch, M. C. (2005). Unconventional Oil: Filling the Gap or Flooding the Market? E. E. O. a. M. Conference. Washington, DC, April 12.

Margolis, R. M. and D. M. Kammen (2001). Energy R&D and Innovation: Challenges and Opportunities. A Reader In Climate Change Policy. S. H. Schneider, A. Rosencrantz and J. Niles. Washington, Island Press: 233-279.

Martin, E. and M. Chester (2006). Evaluation of Waste-To-Ethanol Potential in California. Energy & Resoruces Group. Berkeley, University of California.

McNutt, B. and B. Rodgers (2004). Lessons Learned from 15 Years of Alternative Fuel Experience - From 1988 to 2003. The Hydrogen Energy Transition. D. Sperling and J. S. Cannon. San Francisco, Elsevier: 165-179.

Moore, M. A., A. E. Boardman, et al. (2004). ""Just give me a number!" - Practical values for the social discount rate." Journal of Policy Analysis and Management **23**(4): 789-812.

Moritis, G. (2006). "Special report: EOR / Heavy oil survey." Oil and Gas Journal **2006**(April 17th): 37-57.

Morrow, W. R., W. M. Griffin, et al. (2006). "Modeling switchgrass derived cellulosic ethanol distribution in the United States." Environmental Science & Technology **40**(9): 2877-2886.

National Energy Board (2004). Canada's oil sands: opportunities and challenges to 2015. Energy Market Assesment, National Energy Board, Canada: 158.

Norberg-Bohm, V. (1999). "Stimulating 'green' technological innovation: An analysis of alternative policy mechanisms." Policy Sciences **32**(1): 13-38.

Pacca, S. and A. Horvath (2002). "Greenhouse gas emissions from building and operating electric power plants." Environmental Science & Technology **36**(14): 3194-3200.

Rubin, E. S., M. R. Taylor, et al. (2004). "Learning curves for environmental technology and their importance for climate policy analysis." Energy **29**(9-10): 1551-1559.

Schafer, A. and H. D. Jacoby (2006). "Vehicle technology under CO2 constraint: a general equilibrium analysis." Energy Policy **34**(9): 975-985.

Schwarzenegger, A. (2005). Executive Order S-3-05: Greenhouse Gas Emission Reduction Targets, Executive Department, State of California: 1.

Simbeck, D. R. (2006). Emerging Unconventional Liquid Petroleum Options. E. E. O. a. M. Conference. Washington, DC, March 27.

Stern, N., S. Peters, et al. (2006). Stern Review: The Economics of Climate Change. London, HM Treasury: 576.

Taylor, M. R., E. S. Rubin, et al. (2006). Technological Innovation and public policy. Managing Greenhouse Gas Emissions In California. M. Hanemann and A. E. Farrell. Berkeley, University of California: 3-1 to 3-31.

Tilman, D. A., J. Hill, et al. (2006). "Carbon-Negative Biofuels from Low-Input High-Diversity Grassland Biomass." Science **314**: 1598-1600.

Turner, B. T., R. J. Plevin, et al. (2007). Creating Markets for Green Biofuels. Transportation Sustainability Research Center. Berkeley, University of California: 62.

U.S. Environmental Protection Agency (2000). Guidelines For Preparing Economic Analyses. Washington, DC: 210.

United States Climate Action Partnership (2007). A Call For Action. Washington, DC: 15.

Wigley, T. M. L., R. Richels, et al. (1996). "Economic and environmental choices in the stabilization of atmospheric CO2 concentrations." Nature **379**(6562): 240-243.

Williams, R. H., E. Larson, et al. (2006). Synthetic fuels in a world with high oil and carbon prices. 8th International Conference on Greenhouse Gas Control Technologies, Norway.

Winebrake, J. J. and A. Farrell (1997). "The AFV Credit Program and Its Role in Future AFV Market Development." Transportation Research D **2**(2): 125-132.

Wyman, C. E. (2003). "Potential synergies and challenges in refining cellulosic biomass to fuels, chemicals, and power." Biotechnology Progress **19**(2): 254-262.

Yergin, D. (2006). "Ensuring energy security." Foreign Affairs **85**(2): 69-+.

Alexander E. Farrell

Assistant Professor, Energy and Resources Group

Director, Transportation Sustainability Research Center

University of California Berkeley

http://erg.berkeley.edu

Testimony to the House Subcommittee on Energy and Air Quality

April 18, 2007

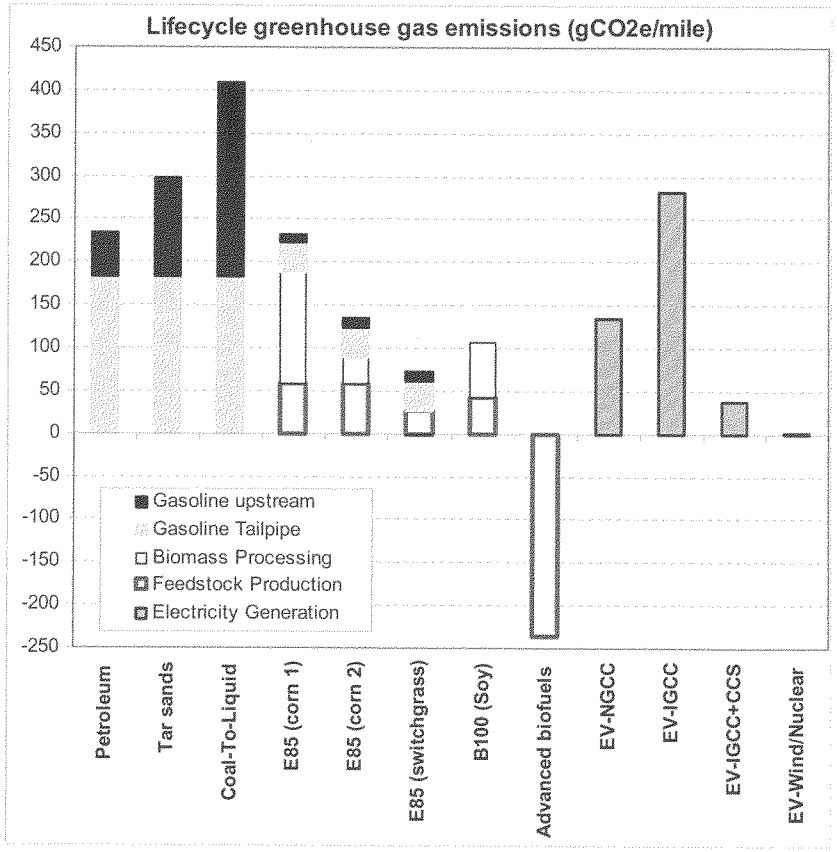

Notes

a) Petroleum, Tar Sands, and Coal-To-Liquid values are from (Brandt and Farrell 2006). Upstream values here are averages over of values reported in the literature, actual emissions from values will vary. If applied, carbon capture and sequestration (CCS) technologies may capture some upstream emissions.

b) Ethanol and Biodiesel values are from (Turner, Plevin et al. 2007), which uses a modified version of GREET v1.7. This model does not fully account for land use and other effects, so actual greenhouse gas emissions may be higher. Corn 1 is based on a dry mill using coal. Corn 2 is based on the best technology currently in use today, a dry mill using biomass for energy supply.

c) Advanced Biofuel values are from (Tilman, Hill et al. 2006) but these technologies are not yet proven. Actual GHG emission rates may vary significantly from the values shown.

d) Electric Vehicle (EV) values are from (Arons, Lemoine et al. 2007). NGCC is natural gas combined cycle, IGCC is integrated coal gasification and combined cycle.

e) In order to focus on fuels, all calculations assume identical plug-in hybrid electric vehicles per (EPRI 2002). These technologies are not yet commercialized. Emission rates will be higher for liquid fuels used by conventional vehicles.

f) These data are available http://erg.berkeley.edu/erg/people/faculty/farrell_publications.shtml

References

Arons, S., D. Lemoine, et al. (2007). Energy and Climate Implications of Plug-In Hybrid Electric Vehicles. Energy and Resources Group Working Paper. Berkeley, University of California.

Brandt, A. R. and A. E. Farrell (2006). "Scraping the bottom of the barrel: CO2 emissions consequences of a transition to low-quality and synthetic petroleum resources." Climatic Change **Forthcoming**. http://erg.berkeley.edu/erg/people/faculty/farrell_publications.shtml

EPRI (2002). Comparing the Benefits and Impacts of Hybrid Electric Vehicle Options for Compact Sedan and Sport Utility Vehicles. Palo Alto, EPRI: 86.

Tilman, D. A., J. Hill, et al. (2006). "Carbon-Negative Biofuels from Low-Input High-Diversity Grassland Biomass." Science **314**: 1598-1600.

Turner, B. T., R. J. Plevin, et al. (2007). Creating Markets for Green Biofuels. Transportation Sustainability Research Center. Berkeley, University of California: 62. http://repositories.cdlib.org/its/tsrc/1

Mr. BOUCHER. Thank you, Dr. Farrell, and the committee thanks each of the witnesses for joining us here. Mr. Maley, we particularly thank you for your presence, given your difficulty in making all of our flight connections, and even though you are a little differently attired from the rest of us, we very much welcome you here today.

Let me begin my questions with you, if I may. I think you are generally familiar with the price guarantee legislation that Mr. Shimkus and I will be introducing very shortly for coal-to-liquids technology.

Mr. MALEY. Yes, I am.

Mr. BOUCHER. I know that your company is interested in building a coal-to-liquids facility in the United States. Our price guarantee is designed to give confidence to the investor community that if the price of petroleum declines below the benchmark of about $40 per barrel, that facilities that are constructed to manufacture coal-to-liquids would not be stranded. Would our legislation in your mind achieve that result, and would it create the confidence necessary for you to go forward and construct a coal-to-liquids facility in the U.S.?

Mr. MALEY. Yes, it would. I believe the volatility, the historic volatility of oil prices is a major impediment to investment, and being able to—but over time, when you see the long-term price trend, we believe that between the lows and the highs that you have a viable project and the legislation allows that project to survive those good times as well as the bad times.

Mr. BOUCHER. Are you aware of other companies that might be considering making coal-to-liquids facility investments in the U.S.?

Mr. MALEY. Yes, I am.

Mr. BOUCHER. Have you had any conversations with them about any reluctance that they have today borne of uncertainties about the future price of oil and whether or not the passage of our price guarantee provision would give them the confidence they are seeking?

Mr. MALEY. Yes. We have had conversations with a number of major U.S. industrial companies and investment companies and they view that as the major impediment to developing this technology.

Mr. BOUCHER. And our legislation would overcome that impediment?

Mr. MALEY. Yes, I believe it would.

Mr. BOUCHER. Thank you, Mr. Maley. Those were great answers.

Mr. MALEY. Thank you.

Mr. BOUCHER. Mr. Ward, you probably are aware of the back-and-forth competing statements, controversy, if you will, over whether or not a gallon of liquid fuel created from coal has a carbon content that is any greater than a gallon of traditional diesel. The research that I have seen suggests that there is certainly no greater carbon content in a gallon of coal-to-liquids fuel than there is in traditional diesel and some of the studies even suggest that the coal-to-liquid variety has a lower carbon content than does traditional diesel. I know you have looked at this subject and you have some expertise on it. Can you enlighten us about the relative carbon content of coal-to-liquids fuel versus traditional diesel?

Mr. WARD. Yes, sir. Thank you, Mr. Chairman. We have looked at that, and one of the things to preface the answer would be also to remind the members that the fuel itself in terms of all the other criteria pollutants far exceeds the standards that have been set by petroleum fuels. So when you are talking about sulfur and nitrogen oxides and particulates and all the other things that come out when you burn fuel in an automobile, from that perspective the coal-to-liquids fuels are much, much cleaner. From a carbon perspective, in my testimony on page 7, I refer to a Department of Energy study that looks at it from a life cycle assessment perspective, from the well to the wheels all the carbon emissions that go into producing the fuel and then using it in different products. If you look at that on a life cycle basis, the coal-to-liquids fuels are going to be—and if you capture the carbon in the manufacturing process, the coal-to-liquids fuels are going to be no worse and probably a little better than petroleum-derived fuels. Depending on the type of coal-to-liquids technology that you use, you can actually end up with a more energy-dense fuel from the coal-to-liquids projects that will give you more power when you use it in the engine and that is also in effect where you are getting more power for approximately the same amount of carbon.

Mr. BOUCHER. Thank you very much, Mr. Ward.

Let me ask a question of Mr. Foody about Iogen and its plans. I know that you have under consideration the construction of a commercial-scale cellulosic ethanol manufacturing facility, I believe in the State of Idaho. Is that correct?

Mr. FOODY. Yes, that is right.

Mr. BOUCHER. Can you give us a sense of where you are in the development of that plan and at the same time talk about your potential interest in building other commercial-scale cellulosic facilities in the U.S.? And finally—and I will turn the balance of the time over to you to answer these questions—what do you think the overall capacity in the United States for the creation of cellulosic ethanol is measured in number of gallons per year that could be produced?

Mr. FOODY. OK. Let me first of all talk about where we are at with our project in Idaho. We are developing a site based upon the development work at our demonstration facility. We have acquired the site. We have already got contracts with farmers to supply all the feedstock that is necessary. We have undertaken a significant engineering program. As you might be aware, we were selected by the U.S. Department of Energy for an award of up to $80 million in support of that facility. We also have filed a pre-application for a loan guarantee for another portion of the financing with the Department of Energy. We have begun negotiations on the grant and look forward to hearing back about the state of the loan guarantee. We anticipate that within a period of about 30 months from the time at which we have full clarity of our funding we will be able to have a project up and running. So that is a quick picture of the situation in Idaho. Following on that, it is our company's intent and plan to be the leading supplier of cellulosic ethanol in America. We are committed to doing a large-scale deployment of technology in North America and we believe we can build a significant industry.

As to America's overall capacity, I would point to the Billion Ton Study conducted by the U.S. Department of Energy and USDA that estimated that America has the capacity to produce about 30 percent of its total petroleum resources from cellulosic biomass on a continuing basis. That is roughly 60 billion gallons a year. During my testimony, I outlined that there are a number of proposals to increase the Renewable Fuel Standard to a range of something like 20 billion gallons that would point to cellulosic ethanol, and I believe that that 20 billion gallons is very doable and very realistic.

Mr. BOUCHER. Thank you very much, Mr. Foody. My time has expired.

The gentleman from Illinois, Mr. Hastert.

Mr. HASTERT. I thank the chairman, and I have more questions here than I think I am going to have time for answers, but let me just say, Mr. Lambert, last August I went out and bought a flex fuel vehicle, a pickup truck. I thought that was a good thing to do. My problem is, I have to drive 40 miles round trip to fill it up, and if you start to look at the numbers, sometimes that doesn't pay. A recent Wall Street Journal article highlighted certain policies and practices that are making it more difficult for franchise service stations to install E–85 pumps. Are you aware of these practices, and if so, what is the impact and what we can do about it, briefly?

Mr. LAMPERT. We have certainly been made aware of franchise issues and how they have prohibited—just very quickly as an example, if I were to own the corner gas station, my personal family owned the canopy, owned the equipment, owned the tanks and I was supplying a major brand for purposes of credit card receipts and marketing, et cetera, in most cases I would not be able to install an alternative fueling system even if I paid for all of it and if I wanted to because of the franchise restrictions. So yes, Congressman, that has been a great burden to overcome. The State of New York and the State of Iowa have addressed that in franchise laws within their——

Mr. HASTERT. So you are saying the big guys, the big three or big four, big five, whatever, if you are—and I will use names. If you have a Shell or a BP or whatever station, you can't sell this stuff?

Mr. LAMPERT. That is correct.

Mr. HASTERT. OK. Let me ask you another question. What about—here is something that I have experienced. If you go out and talk to the Wal-Mart people or if you talk to the Circle K or if you talk to 7–Eleven folks, they are very reticent about putting these pumps in because they haven't got UL certification and there is a liability issue. Have you found that to be true?

Mr. LAMPERT. Yes, sir, absolutely, and you are well aware of that. We have worked on this issue for a year and a half. For the members of the committee, Underwriters Laboratory rescinded the previous certifications that we had received for E–85 fueling equipment on October 5 of last year. Underwriters Laboratory indicated that there was no evidence of failure, no evidence of corrosion, no anecdotal evidence, but, however, the certifications were rescinded and we now expect to have a new process in place by the end of the year. I still do not believe that we will have any E–85 equipment available until mid–2008.

Mr. HASTERT. Do you know why that rescinding took place?

Mr. LAMPERT. No, sir, I have not been able to determine that.

Mr. HASTERT. Let me ask you another question. I had a meeting with Underwriters Laboratory and the head of Underwriters Laboratory said that they weren't even asked to do an E–85 discovery or certification until last June. Do you know who asked them to do that?

Mr. LAMPERT. Well, CleanFuel USA, one of our members, along with Gilbarco and Dresser Wayne had been working with UL for some period of time.

Mr. HASTERT. But prior to June, right?

Mr. LAMPERT. Oh, absolutely, yes, sir, and our organization, through Federal appropriations actually provided financial resources to assist that effort.

Mr. HASTERT. Do you know of many major oil companies that made contributions to Underwriters Laboratory to redo this study?

Mr. LAMPERT. Not to my knowledge.

Mr. HASTERT. Would that be possible if somebody didn't ask them until June that this June date became a request by a major oil company?

Mr. LAMPERT. I suppose that is possible. It is certainly coincidental.

Mr. HASTERT. Wouldn't it be strange that we were promised to have Underwriters Laboratory certification by June of this year, a new request came in and then all of a sudden this stuff is rescinded?

Mr. LAMPERT. It is quite unusual.

Mr. HASTERT. Is there a skunk in the woodpile someplace?

Mr. LAMPERT. That is—I will leave that to your nose, sir.

Mr. HASTERT. In your testimony, you mentioned that leading U.S. car manufacturers made a commitment to have 50 percent of their vehicles flex fuel by 2012, the infrastructure is there. Besides issues surrounding E–85 pump certification, what other barriers exist to meeting this infrastructure demand? Do you believe you have appropriate steps to removing these barriers?

Mr. LAMPERT. The primary issue is lack of technical support. The Department of Energy has provided large numbers of grants. There are funds available through competitive processes. We applied for money last year. Our project did not rank high enough. We applied with the States of Illinois, Iowa, Wisconsin, Minnesota in a corridor project. Our program did not rank high enough. Michigan was included in that. Technical support, marketing materials, education, promotional materials, when you drive to that station, sir, we want to be able to have one sign, and when Mr. Boucher drives to a station we want him to see the same sign so there is consistency there, and that is lacking.

Mr. HASTERT. Thank you.

Mr. Foody, very quickly, my time is running out, but I want to ask you a question. The new cellulosic plant, and I am in support of cellulosic ethanol, but the new cellulosic plant that you are talking about is in Idaho. Is that correct?

Mr. FOODY. That is right.

Mr. HASTERT. There happens to be a growing season in Idaho, and while I was in Idaho in the wintertime, it is pretty cold, not

a lot of grass is growing. So you have to have a feedstock that is continuous, right, to keep these plants running 12 months a year?

Mr. FOODY. No, actually in most cases we are targeting on using agricultural residue that is harvested just at one time in the year so——

Mr. HASTERT. So you didn't actually put hay or silage-type materials——

Mr. FOODY. We put hay or silage—in the case of Idaho, it will be weed and barley straw, or if it was in Illinois, it would be corn stocks and corn stover. We collect after harvest season, store at a central location and then use throughout the year.

Mr. HASTERT. And you can take like saw grass and store that and make hay out of it whatever?

Mr. FOODY. Yes, absolutely. I think the big vision for cellulosic ethanol includes using corn stover as well as switchgrass as a major energy source.

Mr. HASTERT. Thank you.

Mr. BOUCHER. Thank you very much, Mr. Hastert.

The gentleman from Georgia, Mr. Barrow, is recognized for 5 minutes.

Mr. BARROW. I waive.

Mr. BOUCHER. The gentleman waives.

The gentleman from Utah, Mr. Matheson, is recognized for 5 minutes.

Mr. MATHESON. Thank you, Mr. Chairman.

Mr. Ward, in your testimony at the end you list several possible incentives to help with the development of coal liquefaction. In a constrained world, what would be your priority out of those incentives? What do you think is the most important for us to be looking at from a public policy perspective?

Mr. WARD. Well, clearly we have already discussed the pending bill coming from Chairman Boucher and Congressman Shimkus which if it is administered correctly—the key to that bill will be where the price collar is set, and if the price collar is set in such a way and the program is administered, that could be a very powerful incentive. Another of the incentives that is on the table is the extension of the Excise Tax Credit, which was given to coal-to-liquid fuels as part of the SAFETEA-LU Act in 2005 but it expires in 2009. This is a very powerful incentive. It addresses the market price risk associated with fluctuating oil prices and there is a minimal amount of opportunity for what you might call bureaucratic impediments that may be able to creep into the program. So I think those would be the two top priorities.

Mr. MATHESON. Mr. Hughes, I was going to ask you, what do you think about the importance of fuel specification standards? Is the National Biodiesel Board working with any engine manufacturers to assure reliable operation of today's ultra-low-emission diesel engines and biodiesel?

Mr. HUGHES. Congressman, that is a great question, and the answer is absolutely. We see full quality as, in the words of Ford, job one, and we have been working since day 1 to provide industry with the ASTM, the American Society of Testing Materials, with the engine makers, automakers, petroleum industry in the development of a fuel specification and ASTM standard for biodiesel. There

is one in place. It is ASTM D6751. That is for B100, used as a blend stock with conventional diesel fuel. We are continuing to work with all of those entities under the ASTM umbrella for a finished fuel specification for finished blends and are moving that ball forward as quickly as is absolutely possible.

Mr. MATHESON. Do you have a sense what the time frame might be on that?

Mr. HUGHES. Well, sometimes they say ASTM moves at a glacial pace but that is a good thing because all of the stakeholders that are involved look at the issue from many various angles. I would say probably maybe within the next year you might see a finished spec for a finished blend of biodiesel up to B–20.

Mr. MATHESON. Dr. Farrell, we have had a lot of climate change hearings before this subcommittee and most witnesses that come before us from different sectors and whatnot have discussed the need for economy-wide action and your testimony says the opposite. Can you expand on why you think we shouldn't be doing it economy-wide?

Mr. FARRELL. I do think we should do an economy-wide approach. That is correct. But a unified, single economy-wide approach is probably not appropriate, and the reason is that the U.S. economy is very diverse, and one of the key things that we need is technological innovation across the entire continent, and a single approach that has, for instance, put a cap on the entire economy essentially would put the same price on the transport sector, the electricity sector, manufacturing sector. Because of differences in cost structure, in the ability for fuels to compete head-on-head on tax structure and regulation, you get very differential responses and most likely very little technological innovation in some sectors of the economy and particularly possibly in the transport sector, which would in the long run lead to the detriment of achieving the goals of both energy security and climate policy.

Mr. MATHESON. We also had the previous question from the chairman about the conflicting information we are getting about potential carbon emissions from fuel derived from coal-to-liquids. You put out a table here that really shows it being exceptionally high. How do we resolve these differences we are hearing about of carbon emissions from coal-to-liquids?

Mr. FARRELL. Thank you, Mr. Matheson. I am pleased to try and resolve this. I don't think there is that much of a difference. In the figures that I show, the top half of the figures were this fossil-based fuels are the upstream emissions, and I would agree. If those are largely captured and sequestered, then you will end up with the tailpipe emissions that are essentially the same as gasoline.

Mr. MATHESON. So you would submit that with that caveat, that the DoE information referred to earlier is consistent with what you are talking about?

Mr. FARRELL. That is correct.

Mr. MATHESON. That is real helpful.

Thanks, Mr. Chairman.

Mr. BOUCHER. Thank you, Mr. Matheson, and thank you for obtaining that clarification.

The gentleman from Texas, Mr. Barton, the ranking member of the full committee, is recognized for 5 minutes.

Mr. BARTON. Thank you, Mr. Chairman. I don't think I will take that much time.

I am obviously, as all of us are, a supporter of alternative fuels and I think debate and let the marketplace determine the best ones or the multiples of ones is good, but I just read something this morning that I didn't know, and I am a little bit troubled by it so I am just going to ask the panel this question. This is an AP story. It is from the Washington—it is reprinted in the Washington Post this morning, and the headline is "Study: Ethanol May Cause More Smog Deaths," and I will just read the top paragraph

> Switching from gasoline to ethanol, touted as a green alternative at the pump, may create dirtier air, causing slightly more smog-related deaths, a new study says... it is not green in terms of air pollutant, said study author Mark Jacobson, a Stanford University civil and environmental engineering professor. If you want to use ethanol, fine, but don't do it based on health grounds. It is no better than gasoline, apparently slightly worse.

His study based on a computer model is published in Wednesday's online edition of the peer-reviewed Journal of Environmental Science and Technology and adds to the messy debate over ethanol.

Mr. Lampert, what is your take on that?

Mr. LAMPERT. Thank you so much for the question. We were aware of that study, Congressman, and had been working with the author for some period of time. The first couple paragraphs makes a notation if 100 percent of the Nation's automobiles operated on E–85, then these next steps may occur. We have no more interest in having 100 percent of the Nation's vehicles operate on E–85. We don't believe that any more prudent than we believe it is prudent today to have our Nation depend on one form of transportation fuel. So I think that the prerequisite there is that if all of our Nation operated on E–85, that is not going to happen, so I just—frankly, I think that it is a very nice research analysis and will leave it at that.

Mr. BARTON. Does anybody else want to comment?

Mr. FOODY. I would like to just say something from the perspective of people developing cellulosic ethanol. We are generally of the view that the growth of this industry shouldn't result in a stepping back on environmental standards, and to the extent that the massive studies which go on in all sorts of different directions point to certain revisions in the regulations for fuels, we would support those.

Mr. FARRELL. Mr. Barton, I had a chance—thank you for the question. I had a chance to read that paper carefully. The very end of the paper, in my opinion, is the most important part where he observed that—the author notes that he has done one study and that over time regulations change, technologies change, and he says as you quoted, that ethanol will be probably no better than gasoline and I think that the processes that we have, whether they are sips or standards for new catalysts for flex fuel vehicles can ensure that we develop, whether they are biomass-based or fossil-based or whatever that we can assure that the health of the American public is maintained.

Mr. BARTON. My last question goes to the gentleman that is the cellulosic ethanol expert. Let us assume that we get your technology in full production and we work out all the kinks and we get

it down the learning curve, however long that takes. Once we get to that great day, what is the price per gallon of cellulosic ethanol most likely to be?

Mr. FOODY. Well, first I would say we don't talk about our own technology cost but I would call your attention to the U.S. Department of Energy's studies through National Renewable Energy Laboratories. They projected that the technology target by 2012 about $1.10 a gallon. Reflecting as a person developing the technology——

Mr. BARTON. That is a wholesale cost or retail cost?

Mr. FOODY. That would be a plant gate cost.

Mr. BARTON. OK.

Mr. FOODY. Reflecting on this as a developer of technology though, I would say that ultimately the price that you will see for these products will be linked to what the price of oil and how energy markets develop and that to the extent that the price is higher than the absolute cost, you will see greater investment in the technology and greater reduction in the consumption of petroleum and better energy security.

Mr. BARTON. So a good round number 5 years from now is $1 a gallon wholesale?

Mr. FOODY. I think that is the price that the DoE estimated. I think though you really have to keep in mind, if the wholesale price of gasoline is $2 a gallon, that will probably determine the ultimate selling price.

Mr. BARTON. I understand how a market works. You are not going to give your product away. OK. But it is not going to be $4?

Mr. FOODY. No, it is not going to be $4.

Mr. BARTON. Thank you, Mr. Chairman.

Mr. BOUCHER. Thank you very much, Mr. Barton.

The gentleman from Washington State, Mr. Inslee, is recognized for 5 minutes.

Mr. INSLEE. Thank you. I appreciate your testimony. Thanks for being here all of you, and I missed some of it. We have another global warming hearing over there in another building I have been sitting in so there are a lot of places to deal with global warming.

I wanted to ask you particularly, Mr. Ward, about some of the things I talked about earlier about coal-to-liquids and I am looking at a chart and I will try to get a copy to you, but basically it is an EPA evaluation of percent change in global warming gas emissions from a variety of fuels, and it shows for cellulosic ethanol there would be a 90 percent reduction in global warming gas reductions per unit. For biodiesel, there would be a 67.7 percent reduction. For corn ethanol, and this is an average, there would be a 20 percent reduction. For coal-to-liquids without carbon sequestration, there would be 118 percent increase, and with sequestration there would be a 3.7 percent increase compared to today's operating situation which is basically gasoline. So the first question I have, are those number real? Are those the best assessment that we have at the moment? And second, if they are and if we do have a limited resource base to invest in new technologies, why would we—assuming you accept the premise that there is a problem with global warming, why would we go with a technology that without sequestration almost doubles or more than doubles CO^2 and goes up a lit-

tle bit with sequestration when as an alternative, and I think a probably successful alternative, to burn coal cleanly, sequester the CO^2, produce electricity and feed our plug-in hybrids that I drove a few weeks ago—you get 150 miles a gallon of gasoline and a penny a mile for electricity in non-peak hours—why would that not be a better use of our coal, a cleaner use of our coal and more sensible use for our coal as opposed to coal-to-liquids?

Mr. WARD. I will answer the second question first and then go back to the first one. Plug-in hybrid vehicles are a cleaner solution. They are absolutely a good technology and it is a technology that this country needs to pursue. The challenge with plug-in hybrid vehicles is that you need to build a new infrastructure and a new fleet of vehicles in order to get that done. What coal-to-liquids does for you is produces a fuel that works in the existing fleet of vehicles and can serve as a bridge for us to whatever future vehicle economy it is whether it is plug-in hybrids or hydrogen economy or whatever that future is.

Mr. INSLEE. Can I stop for you for a second because I want to understand your answer. You said plug-ins would require a new infrastructure. What are you referring to?

Mr. WARD. You are going to have to make the plug-in vehicles themselves. You are going to have to get them into the market and distributed. I don't think we can do plug-in airplanes. I don't think we can do plug-in locomotives. I don't know that we can do plug-in over-the-road trucks. There is going to be an existing fleet of petroleum-fueled vehicles on the roads for a very long time. As the inventory wears out, coal-to-liquids fuels will work in all of those vehicles as well. So coal-to-liquids is not the end solution but it is a very important strategic bridge to be able to fuel the fleet we have using the resources that we have in the United States.

Mr. INSLEE. So you are saying there would be some segment that we couldn't get to with electrification basically. So I think I understand what you are saying. Assuming that that is true and assuming that we have a limited amount that the Federal Government has, and there are limits even here on what we can spend, thankfully, if we had $100 to spend and if we could spend $100 developing cellulosic ethanol that reduces CO^2 emissions by 90 percent or on biodiesel which reduces emissions 67 percent, why would we spend that limited Federal investment on a technology that best-case scenario increases CO^2 emissions by 3 percent, worse-case scenario doubles it? Why should we use our limited resources for a technology that goes backwards when we have these other alternative fuels that can almost cut CO^2 emissions by 90 percent? Why would we do that? Other than there is—well, anyway, go ahead.

Mr. WARD. Well, I would make a couple of comments with regard to that. Number 1, I think the dollars that we are looking to spend on coal-to-liquids are not to develop the technology, the technology is ready to go, and in my testimony I point out in some more depth in the written testimony that we will likely have a coal-to-liquids infrastructure in this country whether we provide incentives for it or not. It will just happen—it will respond to market forces. It will happen slowly. The plants will come on slowly. The reason for spending Federal dollars on coal-to-liquids technologies now is to build that bridge that we need to get us through the energy secu-

rity issues of bringing that capability of using coal-to-liquids fuels up faster. So, we don't need incentives to improve the technology and I would also point out in my testimony that we got Department of Energy studies that would indicate that if you do capture carbon from your process making coal-to-liquids fuels, you can actually improve——

Mr. INSLEE. Just in closing, my time is up. I want to make closing comments. As far as speed, we are building the largest biodiesel plant in the western hemisphere. It is under construction right now in Grays Harbor, Washington. We are ready to go. We don't have to wait. As far as speed, we got six cellulosic ethanol plants that are going to start construction now that the loan guarantees are going. I do question your argument that somehow this would be faster when we have two industries up and running now, at least the first steps of it. Thank you very much.

Mr. BOUCHER. Thank you very much, Mr. Inslee. Just for your information, in a second round I am going to come back to this question that you have raised, and in fairness to you I thought I would let you know that in case you want to stay and take part in that conversation.

The gentleman from Michigan, Mr. Upton, is recognized for 8 minutes.

Mr. UPTON. Thank you. That second round will start about what, 3 p.m.?

Mr. BOUCHER. A little sooner, I think.

Mr. UPTON. Thank you, Mr. Chairman, and I want to say to Mr. Maley too, I liked your answers as well to Chairman Boucher and I think that I will likely add my name as a cosponsor to that legislation when you introduce it, which I know is in the next couple of days, so please keep me in mind.

Mr. Ward, you indicated that China is spending $30 billion on a coal-to-liquid plant and I am just wondering if you can elaborate on that a little bit, how many facilities and where are they in terms of development, and what level of assistance do we have other than perhaps Mr. Boucher's bill in terms of the Department of Energy looking for that same type of assistance?

Mr. WARD. In China there are over a dozen projects that are in the active stage that I would classify as doing front-end engineering, design or putting them into construction. Probably the farthest along plant is the world's first commercial-size direct coal liquefaction plant. We have licensed our direct coal liquefaction technology to Shenwa Corporation, which is the largest coal producer in China, the first 20,000-barrel-per-day direct coal liquefaction train, and that plant will be coming online in 2008. China has made a strategic decision to invest in coal-to-liquids technologies. They can either spend billions of dollars to build pipelines from the coasts to their interior to make them more dependent on foreign oil, as we are, or they can build facilities to rely on their domestic resources, which is what they have chosen to do.

Mr. UPTON. And as they proceed on that path, are they intending to use carbon sequestration?

Mr. WARD. Not to my knowledge.

Mr. UPTON. Myself and Mr. Doyle have introduced legislation in the last Congress as well as in this one that would require a 10

percent renewable mandate by the year 2012. We have a number of Republican and Democratic cosponsors on that legislation and I just wonder, Mr. Ward, Mr. Foody, Hughes and Lampert, do you think that we can actually—if we are able to pass that legislation, do you think that it is actually achievable by 2012 to reach 10 percent renewable mandate?

Mr. LAMPERT. Well, Congressman, I certainly think that is capable. We have last year burned about 140 billion gallons of unleaded gasoline. As you know, every motor vehicle in the United States today can run on 10 percent ethanol so we could hit that threshold pretty quickly with the 6 million flexible fuel vehicles we have on the road today. We could use another 5 to 6 billion gallons should the infrastructure be available to fuel those vehicles. So I would respond in a very positive manner, yes, that would be possible.

Mr. UPTON. Mr. Hughes, I am glad to say that we have got a biodiesel plant in my district now that is operating and it is online now.

Mr. HUGHES. Great. That is fantastic. I echo Mr. Lampert's comments. I think that would be optimistic to be able to do that and the biodiesel industry has set a vision for ourselves to be 5 percent of the diesel fuel by 2015. We look to be a very substantial player and actually are working with the trucking industry. We are looking at the idea of maybe coming forward to you all in the Congress with some kind of a standard for biodiesel in the diesel pool and that would be something on the order of around 1 billion gallons by 2012.

Mr. UPTON. Mr. Foody?

Mr. FOODY. I would say we believe that a 10 percent renewable fuels by 2012 is very doable. However, cellulosic ethanol by that time probably will not be a major contribution to that number. Cellulosic ethanol—by 2012, that is about 15 billion gallons. That will be about the time that we are ready to build very large projects and within the next 10 years cellulosic ethanol could deliver another 10 percent or another 15 percent on top of that number again.

Mr. UPTON. I talked to Mr. Barton before he left after his questions. I too was a little bit surprised to see that report availed in the Washington Post yesterday or today, and one of my thoughts, perhaps, and I wonder if you might comment on this, Mr. Lampert, was it is because of the transportation of ethanol, not being able to go into a pipeline so you have actually got to put it on rail or send it by truck, that perhaps that factor might have been one of the reasons why in fact the pollution would be the same or perhaps higher because you are not able to take advantage of what I think would be otherwise lower emissions.

Mr. LAMPERT. Well, lower emissions and certainly lower cost. Shipping transportation fuel by pipeline is certainly the cheapest. We do send ethanol by barge as well, but I think in this particular study, what we are looking at is toxicity. Clearly, when you consume ethanol in a motor vehicle, you increase the aldehyde emissions that come from tailpipe, acid aldehyde, acetyl aldehyde, other forms of aldehyde. Those are toxic chemicals. What you are doing, however, is reducing the benzene, the xylene, the toluene, the other very harmful chemicals. It is an issue of toxicity and with our re-

spect to the author, we believe as does EPA and the California Resources Board that some of these toxicity levels that the author has characterized may be misplaced.

Mr. UPTON. Now, doesn't Brazil send most of their ethanol to their distribution facilities by pipeline?

Mr. LAMPERT. A large amount of it is, and that is not to say, sir, that we cannot send ethanol by pipeline but typically a pipeline is owned and operated by a major petroleum company so they don't have a great deal of incentive to assist with that, first. Second, a pipeline is used to ship crude oil, propane, kerosene, et cetera, and you have got a lot of distillates that are going to be left in there. If you wanted to clean the inside of that petroleum, you would use ethanol to do so. And thirdly, there are some metallurgical characteristics that may not allow some of the older pipelines, but that is not to say that we cannot do so.

Mr. UPTON. Mr. Hughes, with the transportation of biodiesel, is there the same trouble as there is with ethanol in terms of water and therefore pipeline distribution problems?

Mr. HUGHES. In Europe right now, you have biodiesel moving through pipelines and it is moving primarily at a low blend, about like a 5 percent biodiesel blend. Our industry has committed some significant resources to working with the pipeline companies to explore the issue, any kind of technical issues that might be associated with moving biodiesel through the pipe here in the U.S. So some of the preliminary reports that we have gotten show that it is likely to happen, favorable and, just stepping through some of those hurdles, but our intent is to eventually have biodiesel moving through the pipes here in the United States.

Mr. UPTON. The last question I have as my time is expiring is, I am just interested from Mr. Foody, Hughes and Lampert in terms of your association with the auto industry. Has there been good coordination? I know that every vehicle can take the 10 percent ethanol. I know that E–85 obviously needs a different engine, which is not all that much more expensive and actually I think it is the same price at least for General Motors, but has the coordination been good between the auto industry and your fuel?

Mr. LAMPERT. Well, Congressman, our organization, National Ethanol Vehicle Coalition, our board of directors is composed of General Motors, Daimler Chrysler, Nissan and Ford Motor Company along with the National Corn Growers, ethanol producers, et cetera, so yes, our coordination is outstanding.

Mr. UPTON. Mr. Hughes?

Mr. HUGHES. We have a wonderful working relationship with the automakers, and in fact some of them, Daimler Chrysler is using biodiesel to factory fill some of their vehicles coming off the lines here in the United States so we have a very positive relationship with them.

Mr. UPTON. Mr. Foody?

Mr. FOODY. If I might say, we have worked with a number of automakers as well and have a good relationship with them. I would give you a quick caveat though. We also have Shell as a major investor in our firm and certainly as we look towards increasing the total amount of alternative fuels in the pool, one sees a different vision of the future sometimes coming from the oil com-

panies than you do from the car companies. I recently heard a fellow from API testify that the oil industry could see increasing the amount of renewable fuels from a 10 to a 15 percent as at least for them a lower-cost way of wrapping up alternative fuels content and I am not really sure where the automakers stand on that.

Mr. UPTON. I yield back.

Mr. BOUCHER. Thank you very much, Mr. Upton.

The gentleman from Texas, Mr. Gonzalez, is recognized for 5 minutes.

Mr. GONZALEZ. Thank you very much, Mr. Chairman. I am trying to limit the discussion on oil independence because I think there are other considerations of the climate change and how we get those basically to benefit one another when we are looking at different alternative fuels.

I cut this article out and it says Texas is top State for alternative fuels. Now, what do you think of that? And California is second. I hate to tell you, the alternative fuel is diesel, and you know what we drive in Texas. This question is—let me see. I think the best—Mr. Lampert, it will be directed to you. And not setting aside but recognizing some considerations, because I am going to read from an article that was written by Mr. Robert Samuelson in the Washington Post on the 24th of January, because ethanol seems to be getting all the attention. There are considerations. One of course is transportation of the materials to produce ethanol, and by rail—I mean, it really is a significant consideration. The transportation of the fuel itself, ethanol, and I think Mr. Upton has touched on that, and then the fueling stations, we have talked about that.

The cost of producing the alternative fuel, ethanol, and there has been some discussion about the added cost per unit, and then the energy or the fuel economy, the energy value of ethanol which my understanding is less than gasoline. You get less miles, less power and so on. All that into consideration. This is Mr. Samuelson's article, Blindness on Biofuels, and then I want your opinion on his deductions or his comments.

> Let's do some basic math. In 2006, Americans used 7.5 billion barrels of oil. By 2030, that could increase about 30 percent to 9.8 billion barrels, projects the Energy Information Administration. Much of that rise would reflect higher gasoline demand. In 2030, there will be more people, an estimated 365 million versus 300 million in 2006, and more vehicles, 316 million versus 225 million. At most, biofuels would address part of the increase in oil demand. It wouldn't reduce our oil use or import dependence from current levels. Suppose we reach the administration's ultimate target of 60 billion gallons in 2030? That would offset less than half of the projected increase in annual oil use. Here is why. First, it is necessary to convert the 60 billion gallons into barrels because there are 42 gallons in a barrel. That means dividing by 42. Further, ethanol has only about two-thirds of the energy value of an equal volume of gasoline. When you do all the arithmetic, 60 billion gallons of ethanol displaced just under 1 billion barrels of gasoline. If that merely offsets increases in oil use, it won't cut existing important dependence or greenhouse gases.

And I guess what I am asking, Mr. Lampert, do you dispute the deductions reached by Mr. Samuelson?

Mr. LAMPERT. I don't have those available, sir, for close review. I would only respond by saying that our organization supports all forms of alternative fuels—compressed natural gas, propane, biodiesel, electricity, plug-in hybrids. We don't believe that we want to be any more dependent on just E–85 or just biodiesel but that

my grandchildren I hope drive into the fuel station in the future, not the gas station but the fuel station and they may get a quick charge on their little electric vehicle or they may buy E–85 or they might buy biodiesel. So I think we are going to have a vast mixture of different forms of fuels, and I would be happy to review the article and provide a response to you in regard to Mr. Samuelson's statements but I am not available to do that this point, sir.

Mr. GONZALEZ. I think what it is with Mr. Samuelson is that if we have legislative mandates and the President is talking about targets regarding the use of alternative fuels, especially ethanol, in his State of the Union that those numbers may be totally off and not realistic, and this committee of course needs to work with real numbers and real facts, and I think that is the point made by this particular columnist. That is the reason that I would ask that question. I understand, and I think I have about 9 seconds but I believe that—is it Mr. Foody?

Mr. FOODY. Yes. If I may, I would like to just respond to those points very briefly. I think that it is certainly true that there is a potential for substantial growth in petroleum use in America. If we had 60 billion gallons of alternative fuels being used in America by 2030, that would mean we would have less imports than if we didn't. It is simply by nature going to be beneficial. I think another point that was mentioned in the article was that that wouldn't reduce greenhouse gas emissions. It is very important to ask the question about what the type of alternative fuel there is. We just heard testimony earlier that said if it is corn-based ethanol, it is something like a 20 percent reduction in greenhouse gas emissions. With cellulosic ethanol, there is something like a 90 percent reduction in greenhouse gas emissions. But there is a potential for that large volume of alternative fuels to help on the greenhouse gas emissions front as well.

Mr. GONZALEZ. My time is up. Thank you very much.

Mr. BOUCHER. Thank you very much, Mr. Gonzalez.

The gentleman from Illinois, Mr. Shimkus, is recognized for 5 minutes.

Mr. SHIMKUS. Thank you, Mr. Chairman, and I appreciate the testimony here, and just to follow up on Mr. Lampert's comments. Those of us who have been pushing renewable fuels and alternatives, we want everybody at the table.

We want the more, the merrier, and I think as we move in this debate, that would help us all and we want—hopefully the market will push all the players to be more efficient and competition and I like that. I also want to mention, as I mentioned Karen McCarthy and biodiesel, I want to clarify, when we talk about biodiesel, of course, my initial interest was soy, soybeans and crushing, and that is what brought me to that debate, but how we were able to move to pass legislation was, we said reformulate a cooking oil—beef tallow, and another colleague who was helpful is recently deceased, Patsy Mink from Hawaii, was very involved in this, and it is that bipartisan nature, and as we do on the cellulosic debate, the benefit—and you talk about ethanol transportation issues.

That is the benefit of the cellulosic debate. Let us get these refineries in the local areas where you can have local refineries with local products and then just transport it for that regional market.

We are in a great age of really addressing this reliance on imported crude oil and the public is itching for it for the reasons I said in my opening statement.

Let me ask—what is fun here is because I have also been working with the chairman on the coal-to-liquids legislation, Mr. Ward, Mr. Maley, you both have mentioned it and I appreciate your strong comments. I want to give you a minute to address—and I had to step outside for some meetings—again let us take a few minutes and talk about our big opposition will be the environmental community and I think they should not be for the reasons you have already highlighted. Can you briefly tell two or three things each why the environmental community should look at this more positively than we seem to be hearing? Mr. Ward?

Mr. WARD. The fuel that comes from a coal-to-liquids refinery is exceptionally clean compared to the fuel that comes from a petroleum refinery today in terms of those criteria pollutants.

In terms of carbon, if we capture and store the carbon that comes out of the production process, these fuels are about as good or possibly a little better than the fuels that come from petroleum-based refineries.

Mr. SHIMKUS. And the ability to capture the carbon is easier or harder under our coal-to-liquids refinery?

Mr. WARD. In coal-to-liquids refineries, the carbon comes off in a concentrated stream and it is relatively easy to capture. I would point out that carbon capture and storage is going on today in large scale. Just down the road from the North Dakota coal-to-liquids project we are working on is Dakota Gasification. They capture their carbon dioxide, they put it in a pipeline, they send it to western Canada where it is used for enhanced oil recovery and stored in that method. We have studies coming from western Canada where they have been looking at this process over the years and it is being done safely. The carbon is staying in the aquifers and not escaping. So while there is a lot of issues still to work out about carbon capture and storage and the different modalities for that, clearly it is already going on on a large scale and it is something we can do.

Mr. SHIMKUS. Mr. Maley?

Mr. MALEY. I guess my reaction is that when we look at the estimates on global carbon emissions over the next 20 or 30 years, it is almost regardless of what we do. If we do a great job here, global carbon emissions are going to grow dramatically and so our view is that the United States should be taking the lead in developing the capture technology, the storage technologies, the other maybe potential benefit use technologies to deal with this problem because it is a global problem, we can't just solve it here.

Mr. SHIMKUS. So if we are going to move on two bills, one an energy security bill, the other one on global warming, climate change, and those of us who really are supportive of this, if we had to as part of the negotiated compromise move to carbon capture and carbon sequestration in advancing coal-to-liquid capabilities, you think that would be a risk that the financial people and the association would, I would say grudgingly accept?

Mr. MALEY. Yes. I think on the four projects we are developing, we are anticipating that we will up front capture a pure stream of

CO^2 in our projects. We expect in some markets where in Texas or Louisiana, there may be a beneficial use, enhanced oil recovery. In other markets, say in the Midwest, we would be looking to use our pure stream of CO^2, which there are not many of today, to work on projects, demonstration projects or other alternatives, to help to advance the technology that will ultimately provide some solutions.

Mr. SHIMKUS. And being from a part of the country that also has a lot of marginal wells, central and southern Illinois, the west Texas experience is that using carbon capture in enhanced oil recovery, they are recovering more oil than they did in the initial find. I think we are going to be able to do that in the oil fields of Illinois and we look forward to using that technology, but they have to be located and be able to be piped, so this is a great time and I appreciate the hearing, and thank you, Mr. Chairman. My time has expired.

Mr. BOUCHER. Thank you very much, Mr. Shimkus.

The gentlelady from Wisconsin, Ms. Baldwin, is recognized for 5 minutes.

Ms. BALDWIN. Thank you, Mr. Chairman.

Just a quick question for Mr. Lampert. I know you have been asked a lot about—and I am very struck by the image here, and being from Wisconsin, of course, I have significant constituent access to E–85 but we would of course like to see a lot more. But there has been a lot of questions directed to you about how do we ramp up the fewer than 1 percent stations nationwide to greater percentages. I am interested in hearing a little bit more about the geographical distribution and obviously the population centers of the country, many of which are not served, and what sort of discussions and leadership are you hearing from the States in that regard?

Mr. LAMPERT. Excellent question, and a number of States, Wisconsin for one, have really done a lot in the last several months to advance E–85 and different forms of alternative fuels, biofuels, and this has not necessarily just been a Midwest phenomenon. The State of New York is very active. The State of California obviously very active. The State of Washington has been active in alternative fuels. If you look at that map where E–85 stations are, we very intentionally identified Chicago, Minnesota and the front range of Colorado to learn to determine what the success would be, what the failure rate would be of the E–85 fueling stations, and now we are ready to take that out across the country and I believe we do have stations in 41 States across the country. So we think that the next step with that is not the largeness of the Federal grants but rather the Federal income tax credits and the support that again an entrepreneur will choose to utilize rather than is made to utilize because we feel like a mandate is going to result in poor pricing, poor marketing, poor performance and ultimately poor customer satisfaction.

Ms. BALDWIN. Thank you.

Dr. Farrell, a couple of questions for you. I know your testimony got cut off a little bit and there is one aspect I would like you to address at least briefly and then I have a larger question on sort of research and development and sort of how we should attack that, but on the quick one, you mentioned in your written testi-

mony sort of a combination of coal-to-liquids with carbon capture and sequestration and advanced biofuels is a new concept. I would like to hear just a little bit more about what you are hinting at there, and then the larger question that I would like to hear, as we try to incentivize innovation both near term and long term, how do we set that up? Do we do an NIH-like creation in the energy sector? How do we make sure there is peer review going on in both public and private sector research and innovation? I think we have to do it right, and I would love to hear your thoughts on that bigger question.

Mr. FARRELL. Thank you very much. The first question you asked was about the possibility of using both coal and biomass as the feedstocks for the gasification process. This has been done. It has been done for some years in the Netherlands in the Burgenhem project, and the interesting thing is that it is now hypothesized and there is some data which are in the beginning parts of the scientific process. It is just you can actually grow biomass, grasses most likely, that not only produce biomass but actually improve the soil quality by putting carbon into the soil, and by doing so you would actually be able to produce fuels with this biomass that have either zero or slightly negative carbon content.

If you were to combine that biomass with coal and then capture and sequester the CO^2 stream from the process, you could get significantly large quantities of domestically produced fuels very much like the fuels we have today at potentially a very low carbon footprint, potentially negative but rather slightly, and this is an area I think in which to go to your second question, R&D is very necessary. One of the things that is most important about research in this area is that there are a myriad of different technologies and a myriad of different possibilities. I mentioned in the written testimony that we really need across the board, across the entire economy approach to incentivizing innovation, and in my view, strict or tough environmental goals as well as performance goals like we have begun to introduce in California with our low-carbon fuel standard would incentivize the private sector where the bulk of the research is often done as well as programs that would be appropriate whether is through the Department of Energy or the EPA for the university sector as well. But I do think that a sectoral approach is the best way to go after the innovation question.

Mr. BOUCHER. Thank you very much, Ms. Baldwin and Dr. Farrell.

The gentleman from Arizona, Mr. Shadegg, is recognized for 5 minutes.

Mr. SHADEGG. Thank you, Mr. Chairman, and thank you again for holding this hearing. I think these series of hearings have been very helpful and I applaud you for conducting them.

Mr. Foody, let me begin with you. I would like you to give me a straightforward and simple explanation if you can on the, I will use the word efficiency differences between cellulosic ethanol and let us say corn ethanol or ethanol produced from a fermentation process. Is there a substantial differential in the cost involved and in the energy produced?

Mr. FOODY. First of all, let me address the basic technology for cellulosic ethanol. Corn ethanol has been around for many, many

years. Cellulosic ethanol is new technology. There are relatively small commercial operations but it is new technology moving forward. It is in some ways intrinsically more complex and at least more capital intense at the factory although you are working with much lower cost feedstock. You are working with agricultural residues or waste. That is why there is potential for very cost-effective production. When people talk about the greenhouse gas balance difference between the two, one of the fundamental reasons for that is that when you power a facility, a cellulosic ethanol facility, most designs actually use some of the residue from the biomass itself. So no fossil fuels actually come into the process. It is entirely renewable. Not only is the molecules in the fuel themselves so to speak renewable but also the manufacturing process is entirely renewably fuel. The actual ethanol that you get out at the end is the same fuel, used in the same cars. It couldn't be told apart.

Mr. SHADEGG. Mr. Lampert, would you agree with that statement?

Mr. LAMPERT. Absolutely. You bet.

Mr. SHADEGG. In most corn ethanol plants, a natural gas is used to process the plant?

Mr. LAMPERT. That is the majority. We have a plant in Nebraska now that is actually using livestock manure going into a digestion system to produce almost 95 percent of the total energy needed for the facility.

Mr. SHADEGG. Mr. Foody, you would say that there is no net energy gain through cellulosic ethanol opposed to corn ethanol. It is just that the fuel stock is a biofuel stock, or is there a net energy differential?

Mr. FOODY. The finished product is the same.

Mr. SHADEGG. So then you are looking at the amount of energy?

Mr. FOODY. You might look at the amount of fossil-fuel energy that goes into the production, either into the production of the feed stock itself, the fertilizers for making corn or whatever, or that go into the manufacturing operations. So when people talk about well-to-wheels studies and particular carbon that is emitted during the production process, they try to effectively capture or identify all the sources by which fossil carbon goes into the process, and because cellulosic ethanol creates residue that itself has energy and that can be used, most of the balances that have been done around this process work as well. I might also say just a brief addition to this. Both cellulosic ethanol and conventional ethanol processes also produce concentrated CO^2 process streams coming off their fermentation and the numbers that you have heard about haven't incorporated the potential for capture of that CO^2.

Mr. SHADEGG. Mr. Ward, coal gasification has been around for a very long time, hasn't it? Wasn't it in fact used by Germany in World War II?

Mr. WARD. Yes. Actually the coal gasification portion goes back even farther than that. That is how they made the lamps in Dickens' London. But the use of gasified coal to make liquid fuels goes back to—the original work was done in the late 1920's in Germany and then it was implemented during World War II.

Mr. SHADEGG. Because I serve on both this committee and on the Select Committee on Global Climate Change and Energy Independ-

ence, I spent a lot of the break trying to look at some of these issues, and it is my understanding that there is not—I think people think of coal gasification as a single process but a point of fact is, there are lots of different processes that are being used, that the process used by, say, Germany in World War II to create fuel for its war machine has been improved upon dramatically since then and we are still doing improvements since that point in time. Is that correct?

Mr. WARD. That is correct. There are two basic ways of doing coal liquefaction. There is either indirect coal liquefaction where I take the solid gas, I turn it into a gas version and then recombine the gas into a liquid so it is indirect, or direct coal liquefaction where I take the solid coal and convert it directly into a liquid that I can then refine. Germany used both of those technologies back in the 1940's and actually one of our predecessor companies was founded by a scientist from the Manhattan Project, who was dispatched by the United States Government to Germany to learn how they did these things, and those technologies both direct and indirect coal liquefaction have been improved greatly over the last several decades. Where we are now is not needing more research and development. What we need now is to overcome the phenomenon of everyone wants to be the first person to build the fifth plant. So if we can get the first few plants in and get it commercially accepted, then the market can take over and finance the construction of these things like any other kind of refinery.

Mr. SHADEGG. My time has expired, but briefly, with coal gasification being done by different mechanisms, do you have any argument with statistics that are cited here for its greenhouse gas emissions as opposed to other technologies not necessarily being precise or correct or would you say they are pretty accurate regardless of which technology is used?

Mr. WARD. Well, I think the key thing for coal-to-liquids is that the—-if you deal with the carbon in the process whether you are doing gasification or you are doing direct goal liquefaction, if you deal with it by taking the concentrated stream that comes out of the process and you store that carbon or you use it for a specific purpose, it pretty clearly shows you that you can make liquid fuels with the same kind of carbon signature or less than what we are doing right now with petroleum, which is what we are trying to replace.

Mr. SHADEGG. Thank you.

Mr. BOUCHER. Thank you, Mr. Shadegg.

The gentleman from California, Mr. Waxman, is recognized for 5 minutes.

Mr. WAXMAN. Thank you very much, Mr. Chairman.

It seems to me that we have two overriding energy concerns. First our dependence on oil poses a tremendous national security, economic and environmental challenge, but second, perhaps even more importantly, uncontrolled emissions of greenhouse gases threaten the very stability of the planet's climate and ecosystems. So it seems to me we should do is, Congress should establish policies that address our oil dependence but would not reduce our greenhouse gas emissions. This could result in wasted public expenditures and failed government policies. I think it is critical to

address both of these issues with any energy legislation considered during this Congress. Otherwise we could adopt policies that could make our job of addressing global climate change more difficult. The effect would be to increase pressure, perhaps unfairly, on other sources of emissions such as electric utilities and the automakers. One way to reduce greenhouse gas emissions while reducing oil use is to ensure that the emissions from transportation fuels decline over time. With this type of constraint in place, all fuels could compete on a level playing field. I would like to get the views of each of the witnesses to whether they would support a declining cap on carbon emissions from transportation fuels. We will start with Mr. Ward and go down the table.

Mr. WARD. As we deal with coal-to-liquids commercialization issues, our company as a developer and all the other companies that I know of are only evaluating projects where carbon capture and storage is capable. What the regulatory framework looks like in terms of how Congress decides to deal with the regulation is something that we are going to respond to but we are not taking a position on it at this time.

Mr. WAXMAN. So you are not advocating or opposing a cap on carbon emissions in transportation fuels?

Mr. WARD. My company is not. We are focused on trying to process the commercialization gap and deal with the energy security associated with where our fuels come from.

Mr. WAXMAN. Next gentleman.

Mr. MALEY. I guess as a company, we are committed to doing what is technically feasible in the marketplace, and as the technologies advance we are committed to implementing those new regimes so we are always at the state of the art of what is technically and economically possible and we would certainly encourage public policy that would support a sensible development of those regimes.

Mr. FOODY. Let me just say, I start from the perspective of representing a company who is producing a fuel that people describe as leading to a 90 percent reduction in greenhouse gas emissions and we are very happy about being able to contribute to that. I think the question of whether one sets targets on the overall fuel declining amount of greenhouse gases or alternatively sets targets, for instance, for the nature of what advanced fuels might be I think depends upon the specific, most efficient way of implementing legislation and we wouldn't have a view, and I am sure you have heard much more learned testimony about all the different options than we have.

Mr. WAXMAN. Thank you.

Mr. HUGHES. Congressman, I represent the National Biodiesel Board. In our trade association, we have fuel producers that make a fuel that DoE has demonstrated as 78.5 percent reduction, life cycle reduction in greenhouse gases and so that is what we are focused on is just getting that out there and reducing those emissions. As an association, we have not as a matter of policy, discussed how the various carbon options, carbon reduction policy options, so we don't have a position for it.

Mr. WAXMAN. Do either of the last two of you have a position one way or the other?

Mr. FARRELL. Yes, sir, I do. Thank you for the question, Congressman Waxman. I think that you are quite right, that not only are these linked but in fact failing to adequately address climate change increases the security risk and increases the economic risk. I think that a declining cap does the crucial task, which is it focuses our attention on identifying what we are care about in this particular domain, which is concentration of greenhouse gases in the atmosphere, and it sends a signal that those values will go down in the right direction, and that is the crucial task.

Mr. WAXMAN. Thank you. While carbon capture and sequestration appears very promising for coal-based electricity generation, the technology for coal-to-liquids doesn't seem ready for a carbon-constrained world. Maybe there is a coal-to-liquids technology that can really deliver low-carbon fuels but so far, I don't know that anyone appears to be discussing that technology. Do we have any response whether we are dealing with both of those issues from the coal technology side?

Mr. WARD. Yes, sir. I would point out that the gasification technology at the core of an IGCC plant that we talk about for capturing and sequestering carbon for power generation is the exact same technology that is employed in a coal-to-liquids plant so to the degree that we are able to make coal-fueled power stations through gasification cleaner from a greenhouse gas perspective, the coal-to-liquids refinery is exactly the same.

Mr. WAXMAN. And you think we accomplish the lower carbon fuels as well as displacement of oil for fuel?

Mr. WARD. There are a number of strategies that we can do. As my testimony points out, if we capture the carbon and store it from the production process, we can produce a fuel that on a life cycle basis is equal to or a little better than the petroleum fuels that we are replacing. As Dr. Farrell pointed out, there are additional technological improvements that will come into play over time such as the co-gasification of biomass to give us the opportunity to lower those carbon emissions even farther.

Mr. WAXMAN. Thank you.

Thank you, Mr. Chairman.

Mr. BOUCHER. Thank you very much, Mr. Waxman.

We will embark now on a second round of questions, and given the fact that there is relatively limited attendance of Members at this stage, it should go rather quickly.

I want to come back to the question that Mr. Inslee raised about whether or not a gallon of coal-to-liquids fuel has a carbon content that is any greater than a gallon of traditional diesel. The EPA has released a study that contains a chart which Mr. Inslee refers to that shows that even with carbon capture and sequestration, the coal-to-liquids technology results in a 3.7 percent greater carbon content in the fuel than would be true for a petroleum-based fuel. I don't know where that number comes from. That information is at odds with what Mr. Ward has said based on his extensive examination. It is at odds with what Dr. Farrell has testified to here today, both of whom have said that the fuel coming from coal-to-liquids has no greater carbon content than the petroleum and potentially, according to Mr. Ward, could have a lower carbon content, and so my first question is this: Does anyone know why the

discrepancy between this EPA study showing a 3.7 percent differential with the greater carbon content for the coal-to-liquid product and what you, Mr. Ward and Dr. Farrell, are saying? Dr. Farrell, you are nodding your head. Would you like to take an attempt at that?

Mr. FARRELL. Thank you, Mr. Chairman. I would suggest, I would offer that the value of 3.7 percent, given the wide range of various technologies that Mr. Ward referred to and the fact that technologies are advancing so when we build the second, third, fourth of these plants, they will be different than what we are thinking about today, and our comments that the emissions if the carbon is captured from these processes are approximately the same that those are all within the range of these potential studies so I think there is no conflict among these three.

Mr. BOUCHER. So you are saying there is really no conflict, this is kind of an average of the technologies that we know about?

Mr. FARRELL. I would say this is one study, this EPA study. They have made some assumptions in doing their analyses. You could make slightly different assumptions and come up with a number that would be slightly different, maybe plus two or minus three, and all those are within the range of what we can do with this type of analysis.

Mr. BOUCHER. That is a good answer.

Mr. Ward, would you like to supplement that?

Mr. WARD. Yes. I think the thing to keep in mind when you are looking at any of these kind of analyses, particularly the life cycle analyses, is the assumptions that go into what externalities you include in your studies have a lot to do with where the studies come out. I am not familiar with this particular study. I don't know if they are taking into account the relative energy densities of the different fuels that are being included here. I don't know if this is a study that looks at the well-to-wheels perspective of how far do I have to transport my raw materials to do this stuff, what type of oil feedstock going into the refining and then comparing to all of those variables shift around. That is why in my testimony we try to say that if you capture and store the carbon, you are going to be about the same or a little better than the petroleum fuels you are trying to replace.

Mr. BOUCHER. Thank you very much. Let me simply say that the legislation that Mr. Shimkus and I will soon put forward that will provide a Federal price guarantee for coal-to-liquids facilities will contain a requirement that in order to participate in the price guarantee program, any applicant for a price guarantee must agree to capture the carbon that comes from the process and permanently sequester it, and so there will certainly be no greater carbon contribution from the manufacturing process, and if what you are saying is accurate and there is no greater carbon contribution from the fuel itself, then we should have the confidence that the coal-to-liquids technology as facilitated by the new price guarantee program once our bill passes will not increase the greenhouse gas burden. So let me thank you for these very helpful answers, and I would recognize the gentleman from Illinois, Mr. Hastert, for 5 minutes.

Mr. HASTERT. I thank the chairman. I was a little bit perplexed by some of the testimony and some of the answers. I am glad we have this last round.

One of the questions was, I think either to you, Mr. Ward or Mr. Maley, that when you are talking about the efficiency of liquidized coal or gasified coal, that fuel, and whether it had more carbon than gasoline or some of these other fuels we talked about, I think when you look at it and even take this list even though the EPA study—the different fuels that we have, the question and the answer is there is no one fuel that is going to supply or replace petroleum in this country but there are two things that we want to do. We want to have cleaner air, a better environment and at the same time relieve ourselves on the dependability of petroleum that comes from overseas, not only coming off from offshore but also the manipulation of prices and cartels and those types of things, that if we have this production domestically, we have a better supply of quote, unquote, fuel, and not only better but we have a better cost focus and not we hope manipulated and I want to say to you, Mr. Foody, that I think one of the things that we need to really look at is to working together in a North American energy strategy and certainly you folks would be a very important part of that.

That being said, one of the questions was I think to you, Mr. Ward, and discussion that hybrid vehicles are better because basically you plug in and it is much more efficient than the fuel that you are talking about. I question, I think most hybrid fuel vehicles when you plug them it, that is electricity, right? That is the basic fuel of that. And my question is, where does electricity come from. Well, it can come from nuclear energy. We are about our limit of nuclear capacity right now and we haven't built a nuclear plant in this country for 25 years. That is fairly clean. It could come from natural gas, which is fairly clean too but we have a shortage of natural gas and that is why we need to look at other fuels. And then we go back to where 50 percent of our electricity is generated from and it is coal, isn't it, and that is just coal-fired plants, so it seems to me that what you are talking about is a clean plug-in hybrid basically when that energy comes from coal-fired plants. Maybe it isn't as clean as some people purport it to be. Do you want to comment on that?

Mr. WARD. Well, clearly my boss doesn't pay me to promote plug-in hybrid vehicles but the advantage to doing them is that you are using—yes, you are probably using coal-fired power to do that but you are using coal-fired power generally being recharged in the off-peak hours when it is most efficiently produced and at the least cost, and the vehicle itself while you are operating on the batteries has essentially zero emissions so——

Mr. HASTERT. So the vehicle side is clean?

Mr. WARD. Correct, but there are emissions associated with it.

Mr. HASTERT. The coal-fired emissions, whether you are for it or against it, aren't any less on off-peak than they are on peak, are they?

Mr. WARD. Well, you have moved some of the emissions profile back to the generating plant. Overall it is probably a cleaner approach. But the limitation with those vehicles though is that works

for passenger cars and those of us who drive a few miles a day but it doesn't work for trucks and plants.

Mr. HASTERT. I understand that. Thank you.

Mr. Lampert, again we got into the discussion of transportation of ethanol and the pollution that you use to transport. If you blend ethanol at the refinery, wherever that refinery would be, move it through the pipes, you still have to transport the ethanol to the refinery, right? So you have this whole issue. Isn't the issue of ethanol, the efficiency of it, part of the cleanness of it, is that you produce ethanol in a lot of different places and so when you have to splash-blend ethanol, there is going to be an ethanol plant very, very close to where you are splash-blending? Isn't that a fact?

Mr. LAMPERT. I believe of the 106 or 107 operating ethanol facilities that are located in over 33 or 34 States with facilities coming online in Washington, Oregon, Louisiana, planned in Florida, Vermont, Connecticut, New Jersey, et cetera, I think it is not only that, but a national security issue as well to have these refineries spread out across the Nation.

Mr. HASTERT. But the essence of the ethanol refineries when you spread them are close to the splash-blending places as well?

Mr. LAMPERT. Yes, sir.

Mr. HASTERT. The second part of that question, if I could, where is the blend mix if you know it? Right now we are at 10 percent ethanol, and I know when I put the E–85 into my truck and drive it, I probably get maybe 50 miles less or 30 miles less mileage than I get when I put pure gasoline in it—I think it is pure gasoline at least, or 10 percent blend is what it is. So what is the difference? Could you go to 25 percent blend or 15 percent blend or a 30 percent blend or a 40 percent blend and not lose efficiency?

Mr. LAMPERT. Yes, sir, absolutely. If we put a gallon of diesel fuel and a gallon of gasoline and a gallon of alcohol here on the table, the BTU, the energy latent heat content is 135,000 for the diesel. That is why all our farmers now operate diesel tractors. It is 114,000 for gasoline, 87,000 BTUs for ethanol. It is just the chemistry of it. So as we use 85 percent of this, obviously if you go down to 50 percent ethanol you are going to have a reduction in the reduction of BTU content. Clearly we could use E–50, E–40. We are very supportive of blending pumps in the future. But to answer your earlier question, ethanol is denatured or poisoned, if you will, at the production facility and then it is shipped in a 98 percent pure form to the terminal, to the big tank farms where it is mixed at that point.

Mr. HASTERT. I understand. Thank you for your answer. I yield my time back.

Mr. BOUCHER. Thank you very much, Mr. Hastert.

The gentleman from Washington State, Mr. Inslee, for 5 minutes.

Mr. INSLEE. Thank you. I just wanted to tell the committee, I checked on this EPA report of April 2007. It does consider the life cycle costs as far as this analysis. It also does take into consideration various energy equivalents of BT units, so those were important questions and I think it does handle both of those issues for us. I just want to tell you, looking at this report, listening to Dr. Farrell, listening to Mr. Ward, the sort of conclusion I come out to is that we have some biofuels that have potential for very signifi-

cant savings from a CO^2 perspective and I am going to define under the Janesely rule significant as being 30 percent, let us just figure, and there are several biofuels that have that capacity. I don't think coal-to-liquid has that capacity to have a significant CO^2 improvement whereas other biofuels do. Do people agree with that? Does anybody disagree with that at the table?

Mr. FARRELL. If I might, Mr. Inslee, thank you for the question. I think technologies that include coal-to-liquids but also use biomass as the input to the gasification process and so they would be combined biomass and coal-to-liquids could reach this 30 percent reduction but I would have to bend your rule a little bit in order to do that.

Mr. INSLEE. And how would you bend the rule?

Mr. FARRELL. By defining the coal-to-liquid process as a process that was a gasification process that used both coal and biomass as the feedstock, not coal by itself.

Mr. INSLEE. Mr. Ward, is that anywhere in anybody's thinking at the moment?

Mr. WARD. Yes, sir. In fact, there is a great deal of work going on in that area in Europe and that is a capability. If you get to that point, what that would have the effect of doing would be to greatly increase the volumes of fuels you would be able to produce because you are able to use the coal——

Mr. INSLEE. I would be interested in reading any of that material you could provide me. I would be very interested in that.

Mr. Lampert, I wanted to ask you about mandates on pumping stations. I talked to a gentleman who is sort of the majordomo of the Brazilian ethanol program over 30 years and what he told me was, you will have to do something very strong to get the oil and gas industry to put in ethanol E–85 pumps, and the reason is, they are competing with the E–85 industry, if you will. They have no interest in sort of helping their competitor to get going by making those services available, and he says the one piece of advice I will give you is, you will have to do something very strong to change that dynamic, and so I want to—you suggested not to have a mandate but to increase the tax advantage but I am concerned that even that will not inspire those oil and gas distributors, who are not in the ethanol business, to go help their competitors sell a product to break their domination in the industry right now and I think it is a pretty small percentage of service stations that are truly independent from the oil and gas refining industry so why should we think that increased tax incentive will be enough to really inspire a timely industrialization of this, put these pumps in?

Mr. LAMPERT. Congressman, we hear a lot about the Brazilian example, if you will, and just anecdotally speaking, the Brazilian ethanol program was implemented under the auspices of a military dictatorship and in that sense it was much easier to establish public policy. Well, obviously we don't have an interest in that here but we think that profit is a very strong motivator for the petroleum industry and I would use another example of the bottled-water industry of 20 years ago, and I try to characterize myself as a bottled-water salesman, come into a gas station and say let us have 5 feet of your refrigerator space to put in bottled water. Well, the major oil companies laughed the bottled-water salesman out of the

door 20 years ago and the independents saw that as a new profit center and today indeed it is a very a valuable profit center and we feel like as this profit center is established that again the petroleum industry, the majors are not the innovators, it is that little guy, that they will see the loss of profit. Their shareholders may force them into doing that at some point.

Mr. INSLEE. And just real quickly because I want to ask another question. What percentage of distributors are independent from the refining industry roughly?

Mr. LAMPERT. Eighteen to 20 percent.

Mr. INSLEE. I will just tell you, I am still troubled by that. If we only have 18 to 20 percent of the independents, is that really going to be enough. I wanted to ask Mr. Foody, there was a question asked about production of cellulosic ethanol and I am not sure the answer and the question matched. My understanding, I have been told there is hope for cellulosic on an energy-per-acre basis can increase productivity of BTUs per acre, if you will, once we go to cellulosic as opposed to corn. Could you comment on that?

Mr. FOODY. Sure, although if you don't mind, I would like to spend 30 seconds addressing that earlier question. I had a very interesting discussion with the CEO of one of Brazil's largest ethanol companies and he offered me effectively this free advice for America. He said look, the first thing you need to do is have a lot of ethanol in the system, permit people to increase their blend levels to 20 percent or something like that and then he said if there is ethanol in the marketplace and there are flexible fuel vehicles around, all of the people distributing fuel will see that money in flexible fuels. With respect to the question of, can we see rises in the energy density per acre, I think the answer is yes. Numbers of people are developing crops that will grow faster, essentially capture the energy from sunlight better and I think there are great prospects in pushing up the land efficiency so to speak by which cellulosic ethanol would operate.

Mr. INSLEE. Thank you.

Mr. BOUCHER. Thank you very much, Mr. Inslee.

The gentleman from Illinois, Mr. Shimkus.

Mr. SHIMKUS. Thank you, Mr. Chairman. I wanted to stay just to follow my friend Jay Inslee and be prepared to rebut, but he was kind in his series of questions.

You mentioned the profit word and that is kind of a tough thing to do in Washington, DC, these days because profit is kind of defined as being bad. I think profit is good. I think it encourages us to invest and take risks and get a return on the investment. The other thing is, opponents like to have this divide-and-conquer strategy. I want to put on the table, the corn guys are not in opposition with the cellulosic guys. In fact, we want them, we want to encourage them in. In all honestly we get a two-for. We can sell the corn and we can sell the stover. So we are looking forward to this advancement.

Let me go to Mr. Foody first. When we started working on this bill on energy security, I think a lot of us have been hearing stuff about well, we are 10 years away from cellulosic development. If we put in a lot of money in research in development, maybe we can speed that up to 5 years, and I think that has been part of our

thought process. I think part of your testimony says we should be able to go faster than that. Is that correct?

Mr. FOODY. Yes, that is absolutely true. I drive on cellulosic ethanol. It is manufactured at a significant scale.

Mr. SHIMKUS. So what we will want to do is get encouragement and information from the associations of what we need to do. I will tell you, 18 to 20 percent of the retailers being independents—I have, as many of you have heard through these hearings year in and year out, I have over 22 stations that sell E–85. I can guarantee that 20 of them are independents. They are the ones that take the risks. They are the ones concerned about the local community and they are the ones that are putting them in and for a very nominal cost. So I love the independents and I see the large retailers starting to because there is a demand there. The market is pushing that. I think the water example is a perfect example, especially in southern Illinois. People are looking for it. We are trying to know where the stations are and we drive off the intersection just to get there. So again, I want to applaud my independent retailers.

The other issue is, we do not have the ability, or maybe correct me if I am wrong, either in corn or in cellulosic to produce aviation fuel. Is that correct?

Mr. FOODY. I think that is generally true. I would like to respond to something you said at the start of your discussion though and just say I believe the corn guys support the cellulosic ethanol and the cellulosic ethanol guys support corn. I think that the advance of ethanol in the marketplace generally is a positive thing.

Mr. SHIMKUS. Again, that reminds me on the RFS standard. When we did the EPAct, which I am glad in the committee print it gave credit to the energy bill we passed, and if you remember the debate, we were struggling on this committee for a 5 billion RFS standard and we had to get our Senators to help and they proposed an 8 billion and we settled in conference to 7.5 billion. That has been really the key legislative movement to now us having this debate and to have the President come with an RFS standard and have everybody—it is a great time. People are tripping all over themselves to be renewable-fuel folks and we like that, and that is why I am not going to let anybody divide anybody up at this panel, especially from the supply end, because if we want to decrease import of crude oil and meet our environmental challenges for the future and the future demand, we need all of you at the table and we are going to try very diligently not to disincentivize, which you all are doing based on policies that we establish here.

So the last question I have, I wanted to just highlight, because there is an issue, because I also, like my colleague and friend, Mr. Hastert, have been driving around in flexible fuel vehicles for a long time and there is a decreased miles per gallon issue and I believe technology, science and research will address that. Mr. Lampert, can you give us an example of Brazil and a GM product that might be addressing the miles per gallon issue?

Mr. LAMPERT. Not necessarily in Brazil. We do have some evidence of a turbo charged Saab, which is a General Motors product in Sweden that actually increases the turbo charge or the compression ratio to take advantage of the high octane. E–85 has been

around 100 octane and very high-compression-ratio engines could take advantage of that much better so we do have that product available. I believe the Department of Energy actually flew a Saab into the U.S. to get some testing done at Oak Ridge recently but there is technology available. We can get the same mileage out of that gallon of ethanol if we want to spend the money for it.

Mr. SHIMKUS. And Mr. Chairman, that might be another issue that we want to address and how to work with DoE and the research. I can defend my use of the E–85 because it is pretty much like 30 cents cheaper a gallon so just the offset ratio of cost makes it doable but if we really address the miles per gallon issue and see what we can do at the Federal level to help incentivize that research and develop and that technology, I think that is another good addition to the energy security bill.

I yield back.

Mr. BOUCHER. Thank you very much, Mr. Shimkus. It was a very interesting set of questions.

The gentleman from Arizona, Mr. Shadegg, is recognized for 5 minutes.

Mr. SHADEGG. Thank you, Mr. Chairman.

I want to begin, Dr. Farrell, with you. You said something very interesting earlier and I think you got a brief amount of time to explain it but not enough. I would like to hear it a little bit more clearly. And that is, it was pointed out that you do not believe that a single across the entire economy mechanism for dealing with carbon emissions is the correct way to go. I hear a lot of discussion in this committee and all the hearings we have heard about cap and trade. I see a lot of abuses of cap and trade. I see a lot of government involvement in setting the initial caps and trying to set these trade values and I think a part of the problem that I see with cap and trade has to do with the diversity of the economy. In Europe, for example, I don't believe their cap and trade addressed mobile sources which are a major contributor. And so I was interested in, as an alternative to that, I have looked at well, maybe the simpler mechanism would be a carbon tax. Now, of course politicians are never supposed to the word "tax" but if that makes the distribution of whatever societal price we have to pay in this area to address climate change fairer and more transparent, then perhaps that is the right way to go. But you threw a whole new dynamic in saying that you kind of think we should—and your testimony about it was contradictory to what we have heard here so far, that we should be looking at, well, for electricity generation it is one set of calculations, for transportation it is perhaps another, for industrial use it is perhaps another. I would like to give you a chance to extend on that.

Mr. FARRELL. Thank you very much, Congressman. I am happy to do so. For those of you who are interested, I am going to use some figures that are on page 8 of my testimony. What this table does is, what if we put a policy in place across the economy that we could model as a $25 tax? What would happen to the price of generating electricity in various ways, what would happen to the price of gasoline. A $25 tax on the per ton of CO^2, because there is fuel-on-fuel competition in the electricity sector and because carbon capture and storage begins at $25 or $30 to become economical

just from a straight cost basis, we would begin to see in that sector very big changes. That same tax or a cap that resulted in the same would result in increasing gasoline prices of about 24 cents, and if all you wanted was to reduce greenhouse gases to some lower value and some nominal value without requiring much change in the rest of the economy, without also requiring at the same time technological innovation and change across the entire economy, that would be fine, but we do want technological innovation and a change across the entire economy. So a single tax or a single cap across the entire economy is unlikely to induce change and significant innovation across the entire economy. I will remain agnostic for the moment about whether a cap or a tax would be right but I think there may be some role for dividing up the economy into sectors and I suggest that at least the transportation sector may be a place where you would do that. The low carbon fuel standard that has been discussed a little bit already has this property. It can be designed in a way that will induce innovation in the transportation sector without raising costs necessarily a great deal and also be compatible with a cap for electricity and stationary sources.

Mr. SHADEGG. Thank you. I appreciate that.

Now, for the both conventional and cellulosic ethanol representatives, there have been some problems with ethanol. Ethanol has destroyed fiberglass fuel tanks. There are some reports of dissolution of resin in the fiberglass. There is some question about its effect on all types of other engine parts. I believe some industries, the motorcycle industry and others, are concerned about mandated higher quantities of ethanol. I believe Minnesota or one of the other States in the Midwest is trying to go right now to an E–20 standard. That is being opposed. I think it being opposed by the marine industry, the motorcycle industry. How do you propose to address that and would you in the world you envision since we have to embrace all of these alternatives, and I certainly support that including ethanol, how do you envision dealing with some subsets, aircraft being one that has been mentioned so far, but others that don't believe they can adapt to higher concentrations of ethanol. Would you envision that other fuels also remain in the market and that the extra cost for that be there, Mr. Lampert and Mr. Foody?

Mr. LAMPERT. Congressman, I have been very involved with the Minnesota program, and specifically what it calls for is that 20 percent of their fuel use will be a renewable fuel, not for 20 percent ethanol in their fuel. Today they have a 10 percent mandate. All the fuel in Minnesota other than those used for marine and aviation and antique vehicles has 10 percent ethanol in it. They want to take that to the next step but it is not use of 20 percent ethanol, they want to bring in more E–85 vehicles and use more alcohol in total rather than in each vehicle, if you will.

Mr. SHADEGG. Before you comment, Mr. Foody, I have heard directly from the motorcycle and marine industries that they are concerned that they are not going to be able to get fuels that don't have higher concentrations of ethanol. You believe that is not accurate?

Mr. LAMPERT. No. The president of General Motors last week at the New York auto show—I don't want to misquote him. I believe his statement was that the use of E–20 in a vehicle designed and

engineered to operate on E–10 only will cause catastrophic damage to the engine. So we do not support the use of any level blend of alcohol in any form of machinery other than that which has been designed for.

Mr. SHADEGG. Mr. Foody?

Mr. FOODY. I think if one sets a target as people have to see renewable fuels or ethanol go beyond the 10 percent level, you need to take the question of infrastructure very seriously, and we have essentially before us a number of examples of routes that people have taken. Brazilians, for instance, basically stepped up the concentration in their main grade of fuel up to 20 percent and the vehicle makers made the modifications in the cars that allowed that to be workable. Alternatively, one could go for E–85, keep E–10 and have E–85 in the distribution channel. I think it is an open question about which would be more effective. Clearly, there are people on each side of the fence saying it will be more costly for me to do one thing or the other. I know from the oil industry, they believe it will be more costly for them and more difficult to set up E–85 pumps and less likely to succeed than moving ethanol up in the main grade of gasoline. On the other hand, one has to work with assuring that consumers have vehicles and vehicles are on the road that actually can handle that because we don't want to have a problem of a fuel that causes catastrophic destruction of people's vehicles. I think that it is an important question you should consider as you look at the issues of moving renewable fuel use up. It is a question that has been addressed though in at least Brazil and there is probably substantial experience to be gathered there.

Mr. SHADEGG. Thank you.

Mr. BOUCHER. Thank you very much, Mr. Shadegg, and again the committee's thanks to our witnesses today. This has been an extremely interesting conversation and we appreciate your contributions to it. We may have some follow-up questions for you as we continue our examination in which case we will communicate with you and pose those questions. For today though, let me just express our thanks for your very valuable information. This hearing stands adjourned.

[Whereupon, at 1:00 p.m., the subcommittee was adjourned.]

○