Federal Register

3–25–09 Wednesday
Vol. 74 No. 56 Mar. 25, 2009

Pages 12531–13054

The **FEDERAL REGISTER** (ISSN 0097–6326) is published daily, Tuesday through Friday, except official holidays, by the Office of the Federal Register, National Archives and Records Administration, Washington, DC 20408, under the Federal Register Act (44 U.S.C. Ch. 15) and the regulations of the Administrative Committee of the Federal Register (1 CFR Ch. I). The Superintendent of Documents, U.S. Government Printing Office, Washington, DC 20402 is the exclusive distributor of the official edition. Periodicals postage is paid at Washington, DC.

The **FEDERAL REGISTER** provides a uniform system for making available to the public regulations and legal notices issued by Federal agencies. These include Presidential proclamations and Executive Orders, Federal agency documents having general applicability and legal effect, documents required to be published by act of Congress, and other Federal agency documents of public interest.

Documents are on file for public inspection in the Office of the Federal Register the day before they are published, unless the issuing agency requests earlier filing. For a list of documents currently on file for public inspection, see *www.federalregister.gov.*

The seal of the National Archives and Records Administration authenticates the Federal Register as the official serial publication established under the Federal Register Act. Under 44 U.S.C. 1507, the contents of the **Federal Register** shall be judicially noticed.

The **Federal Register** is published in paper and on 24x microfiche. It is also available online at no charge as one of the databases on GPO Access, a service of the U.S. Government Printing Office.

The online edition of the **Federal Register** *www.gpoaccess.gov/nara,* available through GPO Access, is issued under the authority of the Administrative Committee of the Federal Register as the official legal equivalent of the paper and microfiche editions (44 U.S.C. 4101 and 1 CFR 5.10). It is updated by 6 a.m. each day the **Federal Register** is published and includes both text and graphics from Volume 59, Number 1 (January 2, 1994) forward.

For more information about GPO Access, contact the GPO Access User Support Team, call toll free 1-888-293-6498; DC area 202-512-1530; fax at 202-512-1262; or via e-mail at *gpoaccess@gpo.gov.* The Support Team is available between 7:00 a.m. and 9:00 p.m. Eastern Time, Monday–Friday, except official holidays.

The annual subscription price for the **Federal Register** paper edition is $749 plus postage, or $808, plus postage, for a combined **Federal Register, Federal Register** Index and List of CFR Sections Affected (LSA) subscription; the microfiche edition of the **Federal Register** including the **Federal Register** Index and LSA is $165, plus postage. Six month subscriptions are available for one-half the annual rate. The prevailing postal rates will be applied to orders according to the delivery method requested. The price of a single copy of the daily **Federal Register,** including postage, is based on the number of pages: $11 for an issue containing less than 200 pages; $22 for an issue containing 200 to 400 pages; and $33 for an issue containing more than 400 pages. Single issues of the microfiche edition may be purchased for $3 per copy, including postage. Remit check or money order, made payable to the Superintendent of Documents, or charge to your GPO Deposit Account, VISA, MasterCard, American Express, or Discover. Mail to: U.S. Government Printing Office—New Orders, P.O. Box 979050, St. Louis, MO 63197-9000; or call toll free 1-866-512-1800, DC area 202-512-1800; or go to the U.S. Government Online Bookstore site, see *bookstore.gpo.gov.*

There are no restrictions on the republication of material appearing in the **Federal Register.**

How To Cite This Publication: Use the volume number and the page number. Example: 74 FR 12345.

Postmaster: Send address changes to the Superintendent of Documents, Federal Register, U.S. Government Printing Office, Washington, DC 20402, along with the entire mailing label from the last issue received.

SUBSCRIPTIONS AND COPIES

PUBLIC

Subscriptions:

Paper or fiche	**202–512–1800**
Assistance with public subscriptions	**202–512–1806**

General online information **202–512–1530; 1–888–293–6498**

Single copies/back copies:

Paper or fiche	**202–512–1800**
Assistance with public single copies	**1–866–512–1800 (Toll-Free)**

FEDERAL AGENCIES

Subscriptions:

Paper or fiche	**202–741–6005**
Assistance with Federal agency subscriptions	**202–741–6005**

FEDERAL REGISTER WORKSHOP

THE FEDERAL REGISTER: WHAT IT IS AND HOW TO USE IT

FOR: Any person who uses the Federal Register and Code of Federal Regulations.

WHO: Sponsored by the Office of the Federal Register.

WHAT: Free public briefings (approximately 3 hours) to present:

1. The regulatory process, with a focus on the Federal Register system and the public's role in the development of regulations.
2. The relationship between the Federal Register and Code of Federal Regulations.
3. The important elements of typical Federal Register documents.
4. An introduction to the finding aids of the FR/CFR system.

WHY: To provide the public with access to information necessary to research Federal agency regulations which directly affect them. There will be no discussion of specific agency regulations.

WHEN: Tuesday, April 14, 2009
9:00 a.m.–12:30 p.m.

WHERE: Office of the Federal Register
Conference Room, Suite 700
800 North Capitol Street, NW.
Washington, DC 20002

RESERVATIONS: (202) 741–6008

Printed on recycled paper.

Contents

Federal Register

Vol. 74, No. 56

Wednesday, March 25, 2009

Alcohol, Tobacco, Firearms, and Explosives Bureau
NOTICES
Agency Information Collection Activities; Proposals, Submissions, and Approvals, 12900

Arts and Humanities, National Foundation
See National Foundation on the Arts and the Humanities

Centers for Disease Control and Prevention
NOTICES
Agency Information Collection Activities; Proposals, Submissions, and Approvals, 12872
Meetings:
Disease, Disability, and Injury Prevention and Control Special Emphasis Panel, 12872–12873
Ethics Subcommittee, Advisory Committee to the Director, 12873

Children and Families Administration
NOTICES
Public Comment on Tribal Consultation Sessions, 12873–12874

Coast Guard
RULES
Drawbridge Operation Regulation:
Chehalis, Hoquiam, and Wishkah Rivers, Aberdeen and Hoquiam, WA, Schedule Change, 12551–12553
Upper Mississippi River, Rock Island, IL, 12553–12554
PROPOSED RULES
Special Local Regulation for Marine Events:
Temporary change of dates for Recurring Marine Events in the Fifth Coast Guard District, 12769–12774

Commerce Department
See Industry and Security Bureau
See National Oceanic and Atmospheric Administration
NOTICES
Agency Information Collection Activities; Proposals, Submissions, and Approvals, 12834
Privacy Act; Systems of Records, 12834–12836

Copyright Office, Library of Congress
RULES
Recordation of Notices of Termination of Transfers and Licenses; Clarifications, 12554–12556

Delaware River Basin Commission
NOTICES
Request for Existing Water Quality Data, etc, 12841

Education Department
NOTICES
Agency Information Collection Activities; Proposals, Submissions, and Approvals, 12841–12842

Employment and Training Administration
NOTICES
Adjustment Assistance; Applications, Determinations, etc., 12901–12902
Termination of Investigation:
Alcoa, Inc., Alcoa, TN, 12902
America's Business Operations, Dell USA L.P., Round Rock, TX, 12902
BHP Billiton, BHP Copper, Inc., Pinto Valley Operations & San Manuel Arizona Railroad Co., Miami, AZ, 12902
Boralex Sherman, LLC, Stacyville, ME, 12903
Century Land and Timber, Inc., Greenville, NC, 12903
Colorite Specialty Resins, Burlington, NJ, 12903
D/E Associates, Inc., Shamokin, PA, 12903
Gemeinhardt Co., LLC, Elkhart, IN, 12903
General Dynamics Corp., Spokane Valley, WA, 12903
Glaxosmithkline Pilot Plant; Collegeville, PA, 12903
Graphic Visual Solutions, Inc., Greensboro, NC, 12904
ICTEL, Charleston, IL, 12904
Keystone Powdered Metal Company, St. Marys, PA, 12904
Koch Originals, Inc., Evansville, IN, 12904
Lexus Nexis San Francisco, CA, 12904
Lyon Workerspace Products, LLC, Montgomery, IL, 12904
Metaldyne Whitsett, NC, 12904
Multi-Plastics, Inc., Saegertown, PA, 12905
Pittsburgh Glass Works, LLC, Evart, MI, 12905
Plum Creek MDF, Inc., Central Services Division, Columbia Falls, MT, 12905
Rohm and Haas Co., LLC, West Alexandria, OH, 12905
Sunbury Textile Mills, Sunbury, PA, 12905
Talbar, Inc., Meadville, PA, 12905
Victor Insulators, Inc., Victor, NY, 12905–12906
Vintage Verandah International; Kalispell, MT, 12906
W. Y. Shugart & Sons, Inc., Fort Payne, AL, 12906
Worthington Steel Company of Kentucky, LLC, Louisville, KY, 12906
Yorktowne, Inc., Mifflinburg, PA, 12906

Energy Department
See Federal Energy Regulatory Commission
RULES
Weatherization Assistance Program for Low-Income Persons, 12535–12540

Environmental Protection Agency
RULES
Approval and Promulgation of Air Quality Implementation Plans:
Kentucky; Approval Section 110(a) (1) Maintenance Plans for the 1997 8–hour ozone standard for the Huntington–Ashland Area et al., 12567–12572
Maryland; Reasonably Available Control Technology Requirements for Volatile Organic Compounds, 12556–12559
Rhode Island; Carbon Monoxide Limited Maintenance Plan for Providence, RI, 12562–12567
Virginia; Volatile Organic Compound Reasonably Available Control Technology for Reynolds Consumer Products Co., 12572–12575
West Virginia; Amendments to the Control of Air Pollution from Combustion of Refuse, 12560–12562
Approvals and Promulgations of Air Quality Implementation Plans:
Pennsylvania; Update to Materials Incorporated by Reference, 13014–13054

Final Authorization of State Hazardous Waste Management Program Revision:
New Mexico, 12625–12628
National Emission Standards for Hazardous Air Pollutants for Source Categories:
California; Amador County Air Pollution Control District, San Diego County Air Pollution Control District, 12591–12593
Performance Specification 16 for Predictive Emissions Monitoring Systems and Amendments to Testing and Monitoring Provisions, 12575–12591
Pesticide Tolerance; Exemptions:
Thymol, 12613–12617
Triethanolamine, 12617–12621
Tristyrylphenol Ethoxylates, 12621–12625
Pesticide Tolerances:
Fenpropathrin, 12601–12606
Propiconazole, 12606–12613
Pesticide Tolerances; Emergency Exemptions:
Dinotefuran, 12596–12601
Tolerance Exemptions:
Castor Oil, Ethoxylated, Oleate, 12593–12596

PROPOSED RULES

Approval and Promulgation of Air Quality Implementation Plans:
Kentucky; Approval of Section 110(a)(1) Maintenance Plans for the 1997 8–hour ozone standard for the Huntington – Ashland Area et al., 12774–12775
Maryland; Reasonably Available Control Technology Requirements for Volatile Organic Compounds, 12777–12778
Rhode Island; Carbon Monoxide Limited Maintenance Plan for Providence, RI, 12776
Virginia; Volatile Organic Compound Reasonably Available Control Technology for Reynolds Consumer Products Co., 12775–12776
West Virginia; Amendments to the Control of Air Pollution from Combustion of Refuse, 12776–12777
Final Authorization of State Hazardous Waste Management Program Revisions:
New Mexico, 12783
Methods For Measurement:
Amendments to Methods 201A and 202; Filterable PM10 and PM2.5, etc., 12970–13012
National Emission Standards for Hazardous Air Pollutants for Source Categories:
California; Amador County Air Pollution Control District, San Diego County Air Pollution Control District, 12782
Promulgation of Air Quality Implementation Plans:
District of Columbia; Reasonably Available Control Technology Under the 8-Hour Ozone National Ambient Air Quality Standard, 12778–12781
Public Hearings:
Mandatory Reporting Rule for Greenhouse Gases, 12782–12783

NOTICES

Availability of the U.S. Environmental Protection Agency's Strategic Plan for Evaluating the Toxicity of Chemicals, 12847–12848
Clean Water Act Section 303(d): Availability of List Decisions, 12848
Determination:
Maine Marine Sanitation Device Standard, 12848–12849
Draft National Pollutant Discharge Elimination System (NPDES) General Permit:
Discharges from Horse, Cattle and Dairy Cows, Swine, Poultry, and Veal Calf Concentrated Animal Feeding Operations in Oklahoma, 12849–12851
Fomesafen; Product Cancellation Order, 12851–12852
Meetings:
Board of Scientific Counselors (BOSC), Human Health Subcommittee, 12852–12853
Environmental Laboratory Advisory Board, 12853
FIFRA Scientific Advisory Panel, 12853–12856
Pesticide Petitions:
Residues of Pesticide Chemicals in or on Various Commodities, 12856–12858
Pesticide Registration Review:
Chloroxylenol, Zinc, Zinc Salts, and Zeolites, 12858–12860
Registration Reviews:
New Biopesticides Dockets Opened for Review and Comment, 12860–12862
Withdrawal of Tolerance Petitions:
Pirimicarb, Iprodione, Amides, Boscalid, Pyraclostrobin, Mefenoxam, Propyzamide (Pronamide), etc., 12862–12865

Executive Office of the President

See Presidential Documents

Federal Accounting Standards Advisory Board

NOTICES

Meetings:
Federal Accounting Standards Advisory Board, Schedule for 2010, 12865

Federal Aviation Administration

PROPOSED RULES

Airworthiness Directives:
DORNIER LUFTFAHRT GmbH Models Dornier 228 100, et al., 12737–12739

NOTICES

Petition for Exemption; Summary of Petition Received, 12924–12925

Federal Emergency Management Agency

RULES

Changes in Flood Elevation Determinations, 12640–12659
Final Flood Elevation Determinations, 12659–12731
Suspension of Community Eligibility, 12628–12634

PROPOSED RULES

Proposed Flood Elevation Determinations, 12784–12830
Proposed Flood Elevation Determinations; Correction, 12830–12833

NOTICES

Major Disaster Declaration:
Oregon (Amendment No. 1), 12875
Oregon (Amendment No. 2), 12875
Meetings:
Federal Radiological Preparedness Coordinating Committee, 12875–12876
National Advisory Council, 12876

Federal Energy Regulatory Commission

RULES

Mandatory Reliability Standards for Critical Infrastructure Protection, 12544–12551
Preventing Undue Discrimination and Preference in Transmission Service, 12540–12544

PROPOSED RULES
Mandatory Reliability Standards for the Calculation of Available Transfer Capability, etc., for the Bulk-Power System, 12747–12769
Standards for Business Practices and Communication Protocols for Public Utilities, 12739–12747
NOTICES
Applications:
Rock Island, IL, 12842–12843
Authorization for Continued Project Operation:
Eagle & Phenix Hydro Co., Inc, 12843–12844
Blanket Authorizations:
ANR Pipeline Co., 12846–12847
Complaint:
York Generation Co. LLC, 12844
Filings:
New Mexico Gas Co., Inc., 12844
Initial Market-Based Rate Filing:
Entegra Power Services LLC, 12845
Michigan Waste Energy, Inc., 12845
Quntum Energy LLC, 12845–12846
Petition for Rate Approval:
Humble Gas Pipeline Co., 12846
Technical Conference:
Enterprise Texas Pipeline LLC, 12847

Federal Maritime Commission
NOTICES
Agreements Filed, 12865
Ocean Transportation Intermediary License; Applicants, 12865–12866
Ocean Transportation Intermediary License; Reissuance, 12866

Federal Reserve System
NOTICES
Formations of, Acquisitions by, and Mergers of Bank Holding Companies, 12866–12867
Proposals to Engage in Permissible Nonbanking Activities or Acquire Companies, etc., 12867

Federal Trade Commission
NOTICES
Analysis of Agreement Containing Consent Order to Aid Public Comment:
National Association of Music Merchants, Inc., 12867–12869
Analysis of Proposed Consent Order to Aid Public Comment:
CVS Caremark Corp., 12870–12871

Fish and Wildlife Service
PROPOSED RULES
Endangered and Threatened Wildlife and Plants:
12-Month Finding on a Petition to List the Yellow-Billed Loon as Threatened or Endangered, 12932–12968
NOTICES
Endangered and Threatened Wildlife and Plants:
Initiation of 5-Year Reviews of 58 Species, etc., 12878–12883

General Services Administration
RULES
General Services Acquisition Regulation:
GSAR Case 2006G512; Rewrite of GSAR Part 509, Contractor Qualifications, 12731–12733

Health and Human Services Department
See Centers for Disease Control and Prevention
See Children and Families Administration
See National Institutes of Health

Homeland Security Department
See Coast Guard
See Federal Emergency Management Agency
See U.S. Customs and Border Protection

Housing and Urban Development Department
NOTICES
Availability of Fiscal Year 2008 Fleet Alternative Fuel Vehicle Acquisition Report, 12877
Meetings:
Manufactured Housing Consensus Committee, 12877–12878

Indian Affairs Bureau
NOTICES
Grant Program to Assess, Evaluate and Promote Development of Tribal Energy and Mineral Resources, 12883–12889
Indian Gaming:
Approved Tribal – State Class III Gaming Amendments, 12889

Industry and Security Bureau
NOTICES
Export Privileges:
Balli Group PLC, 12836–12839

Interior Department
See Fish and Wildlife Service
See Indian Affairs Bureau
See Land Management Bureau
See National Park Service

Internal Revenue Service
RULES
Automatic Contribution Arrangements; Correction, 12551

International Trade Commission
NOTICES
Investigations:
Ni-Resist Piston Inserts from Argentina and Korea, 12898–12899
Meetings; Sunshine Act, 12899

Justice Department
See Alcohol, Tobacco, Firearms, and Explosives Bureau
NOTICES
Agency Information Collection Activities; Proposals, Submissions, and Approvals, 12899–12900

Labor Department
See Employment and Training Administration
See Labor Statistics Bureau

Labor Statistics Bureau
NOTICES
Agency Information Collection Activities; Proposals, Submissions, and Approvals, 12906–12907

Land Management Bureau
NOTICES
Agency Information Collection Activities; Proposals, Submissions, and Approvals, 12889–12890
Environmental Impact Statements; Availability, etc.:
Shoshone Field Office, ID, 12890–12891

Intent to amend the San Juan/San Miguel Resource Management Plan, etc., 12891–12892
Realty Actions:
Application for the Conveyance of Federally-Owned Mineral Interests; Oregon, 12892
Recreation and Public Purpose (R&PP) Classification; San Juan County, NM, 12892–12893

Library of Congress
See Copyright Office, Library of Congress

National Archives and Records Administration
NOTICES
Records Schedules; Availability and Request for Comments, 12907–12909

National Credit Union Administration
NOTICES
Meetings; Sunshine Act, 12909

National Foundation on the Arts and the Humanities
NOTICES
Agency Information Collection Activities; Proposals, Submissions, and Approvals, 12909–12910

National Highway Traffic Safety Administration
NOTICES
Temporary Exemptions:
Federal Motor Vehicle Safety Standard No. 208, Occupant Crash Protection; Spyker Automobielen B.V., 12925–12929

National Institutes of Health
NOTICES
Meetings:
National Advisory Allergy and Infectious Diseases Council, 12874
National Advisory Research Resources Council, 12874
Public Comment Session for Cancer Patients' CAM Information Needs Comment Period, 12874–12875

National Oceanic and Atmospheric Administration
RULES
Fisheries of the Exclusive Economic Zone Off Alaska:
Pacific Cod by Catcher Vessels Using Trawl Gear in the Bering Sea and Aleutian Islands, etc., 12734
Pacific Ocean Perch for Vessels in the Bering Sea and Aleutian Islands Trawl Limited Access Fishery, etc., 12733–12734
NOTICES
Meetings:
Gulf of Mexico Fishery Management Council, 12839–12840
Taking and Exporting Marine Mammals; Taking Marine Mammals Incidental to the Knik Arm Crossing, 12840–12841

National Park Service
NOTICES
Intent to Repatriate a Cultural Item:
Southwest Museum of the American Indian, Autry National Center of the American West, Los Angeles, CA, 12893
Intent to Repatriate Cultural Items:
Gila National Forest, Silver City, NM, 12893–12894
Texarkana Museums System, Texarkana, TX, 12894–12895
Inventory Completion:
Department of Anthropology, University of Massachusetts, Amherst, MA, 12895–12896
Georgia Department of Natural Resources, Atlanta, GA, 12896–12897
Northwest Museum, Whitman College, Walla Walla, WA, 12897–12898
Texarkana Museums System, Texarkana, TX, 12898

National Science Foundation
NOTICES
Meetings; Sunshine Act, 12910

Nuclear Regulatory Commission
PROPOSED RULES
Variable Annual Fee Structure for Power Reactors, 12735–12737
NOTICES
Draft Regulatory Guide; Issuance, Availability, 12910–12911
Environmental Assessments:
Aastrom Biosciences, Ann Arbor, MI, 12911–12913
Establishment of Atomic Safety and Licensing Board:
Detroit Edison Co., 12913

Overseas Private Investment Corporation
NOTICES
Meetings; Sunshine Act, 12913

Presidential Documents
ADMINISTRATIVE ORDERS
Government Agencies and Employees:
American Recovery and Reinvestment Act of 2009; Responsible Spending of Funds (Memorandum of March 20, 2009), 12531–12534

Securities and Exchange Commission
NOTICES
Self-Regulatory Organizations; Proposed Rule Changes:
Financial Industry Regulatory Authority, Inc., 12913–12918
NYSE Alternext US LLC; Correction, 12921
NYSE Arca, Inc., 12918–12921

Small Business Administration
NOTICES
Meetings:
National Small Business Development Center (SBDC) Advisory Board, 12922

Social Security Administration
NOTICES
Meetings:
Occupational Information Development Advisory Panel, 12922–12923

State Department
NOTICES
Culturally Significant Objects Imported for Exhibition Determinations:
Tsars and the East; Gifts from Turkey and Iran in the Moscow Kremlin, 12923
Meetings:
Shipping Coordinating Committee, 12923

Surface Transportation Board
NOTICES
Railroad Cost Recovery Procedures–Productivity Adjustment, 12929

Transportation Department
See Federal Aviation Administration
See National Highway Traffic Safety Administration
See Surface Transportation Board
NOTICES
Applications for Certificates of Public Convenience and Necessity and Foreign Air Carrier Permits Filed Under Subpart B (formerly Subpart Q), 12923–12924
Aviation Proceedings, Agreements filed the week ending February 28, 2009, 12924
Aviation Proceedings, Agreements filed the week ending March 7, 2009, 12924

Treasury Department
See Internal Revenue Service

U.S. Customs and Border Protection
NOTICES
Agency Information Collection Activities; Proposals, Submissions, and Approvals, 12877

Separate Parts In This Issue

Part II
Interior Department, Fish and Wildlife Service, 12932–12968

Part III
Environmental Protection Agency, 12970–13012

Part IV
Environmental Protection Agency, 13014–13054

Reader Aids

Consult the Reader Aids section at the end of this page for phone numbers, online resources, finding aids, reminders, and notice of recently enacted public laws.

To subscribe to the Federal Register Table of Contents LISTSERV electronic mailing list, go to http://listserv.access.gpo.gov and select Online mailing list archives, FEDREGTOC-L, Join or leave the list (or change settings); then follow the instructions.

CFR PARTS AFFECTED IN THIS ISSUE

A cumulative list of the parts affected this month can be found in the Reader Aids section at the end of this issue.

3 CFR

Administrative Orders:

Memorandums:

Memorandum of March 20, 2009 12531

10 CFR

440 12535

Proposed Rules:

171 12735

14 CFR

Proposed Rules:

39 12737

18 CFR

37 12540

40 12544

Proposed Rules:

38 12739

40 12747

26 CFR

1 12551

33 CFR

117 (3 documents) 12551, 12553

Proposed Rules:

100 12769

37 CFR

201 12554

40 CFR

52 (6 documents) 12556, 12560, 12562, 12567, 12572, 13014

60 12575

63 (2 documents) 12575, 12591

180 (7 documents) 12593, 12596, 12601, 12606, 12613, 12617, 12621

271 12625

Proposed Rules:

51 12970

52 (6 documents) 12774, 12775, 12776, 12777, 12778

63 12782

86 12782

87 12782

89 12782

90 12782

94 12782

98 12782

271 12783

600 12782

1033 12782

1039 12782

1042 12782

1045 12782

1048 12782

1051 12782

1054 12782

1065 12782

44 CFR

64 (3 documents) 12628, 12634, 12637

65 (8 documents) 12640, 12642, 12646, 12648, 12651, 12653, 12655, 12657

67 (5 documents) 12659, 12665, 12673, 12694, 12721

Proposed Rules:

67 (12 documents) 12784, 12791, 12794, 12799, 12804, 12807, 12811, 12821, 12823, 12830, 12832

48 CFR

509 12731

552 12731

50 CFR

679 (2 documents) 12733, 12734

Proposed Rules:

17 12932

Federal Register
Vol. 74, No. 56
Wednesday, March 25, 2009

Presidential Documents

Title 3—

The President

Memorandum of March 20, 2009

Ensuring Responsible Spending of Recovery Act Funds

Memorandum for the Heads of Executive Departments and Agencies

My Administration is committed to ensuring that public funds are expended responsibly and in a transparent manner. Last month, I signed into law the ''American Recovery and Reinvestment Act of 2009,'' Public Law 111–5 (the ''Recovery Act'' or ''Act''), an investment package designed to provide a necessary boost to our economy in these difficult times and to create jobs, restore economic growth, and strengthen America's middle class. The Recovery Act is designed to stimulate the economy through measures that, among other things, modernize the Nation's infrastructure, jump start American energy independence, expand high-quality educational opportunities, preserve and improve access to affordable health care, provide middle-class tax relief, and protect those in greatest need. It is not intended to fund projects for special interests.

In implementing the Recovery Act, we have undertaken unprecedented efforts to ensure the responsible distribution of funds for the Act's purposes and to provide public transparency and accountability of expenditures. We must not allow Recovery Act funds to be distributed on the basis of factors other than the merits of proposed projects or in response to improper influence or pressure. We must also empower executive department and agency officials to exercise their available discretion and judgment to help ensure that Recovery Act funds are expended for projects that further the job creation, economic recovery, and other purposes of the Recovery Act and are not used for imprudent projects.

To these ends, I hereby direct that for any further commitments, obligations, or expenditures of funds under the Recovery Act, the head of each executive department or agency shall immediately take all necessary steps, to the extent consistent with the Act and other applicable law, to comply with this memorandum.

Section 1. *Ensuring Merit-Based Decisionmaking for Grants and Other Forms of Federal Financial Assistance Under the Recovery Act.* (a) Executive departments and agencies shall develop transparent, merit-based selection criteria that will guide their available discretion in committing, obligating, or expending funds under the Recovery Act for grants and other forms of Federal financial assistance. Such criteria shall be consistent with legal requirements, may be tailored to the particular funding activity, and shall be formulated to ensure that the funding furthers the job creation, economic recovery, and other purposes of the Recovery Act. To this end, merit-based selection criteria shall be designed to support particular projects, applications, or applicants for funding that have, to the greatest extent, a demonstrated or potential ability to: (i) deliver programmatic results; (ii) achieve economic stimulus by optimizing economic activity and the number of jobs created or saved in relation to the Federal dollars obligated; (iii) achieve long-term public benefits by, for example, investing in technological advances in science and health to increase economic efficiency and improve quality of life; investing in transportation, environmental protection, and other infrastructure that will provide long-term economic benefits; fostering energy independence; or improving educational quality; and (iv) satisfy the Recovery Act's transparency and accountability objectives.

(b) No considerations contained in oral or written communications from any person or entity concerning particular projects, applications, or applicants for funding shall supersede or supplant consideration by executive departments and agencies of such projects, applications, or applicants for funding pursuant to applicable merit-based criteria.

Sec. 2. *Avoiding Funding of Imprudent Projects.* (a) Funds under the Recovery Act shall not be committed, obligated, or expended by any executive department or agency, and shall not be used by any State or local governmental or private grantee or awardee, to support projects of the type described in section 1604 of Division A of the Recovery Act, which states that ''[n]one of the funds appropriated or otherwise made available in this Act may be used by any State or local government, or any private entity, for any casino or other gambling establishment, aquarium, zoo, golf course, or swimming pool.''

(b) In exercising their available discretion to commit, obligate, or expend funds under the Recovery Act for grants and other forms of Federal financial assistance, executive departments and agencies, to the extent permitted by law, shall not approve or otherwise support funding for projects that are similar to those described in section 1604 of Division A of the Recovery Act.

(c) In exercising their available discretion to commit, obligate, or expend funds under the Recovery Act for grants and other forms of Federal financial assistance, executive departments and agencies, to the extent permitted by law, shall not approve or otherwise support any project, application, or applicant for funding that is imprudent or that does not further the job creation, economic recovery, and other purposes of the Act. To this end, executive departments and agencies shall exercise their available discretion to decline approving or otherwise supporting particular projects, applications, or applicants for funding unless the department or agency has affirmatively determined, in advance, that the project, application, or applicant has a demonstrated or potential ability to: (i) deliver programmatic results; (ii) achieve economic stimulus by optimizing economic activity and the number of jobs created or saved in relation to the Federal dollars obligated; (iii) achieve long-term public benefits by, for example, investing in technological advances in science and health to increase economic efficiency and improve quality of life; investing in transportation, environmental protection, and other infrastructure that will provide long-term economic benefits; fostering energy independence; or improving educational quality; or (iv) satisfy the Recovery Act's transparency and accountability objectives.

(d) Where executive departments or agencies lack discretion under the Recovery Act to refuse funding for projects similar to those described in section 1604 of Division A of the Act, or other projects that the executive department or agency deems imprudent or as not furthering the job creation, economic recovery, or other purposes of the Act, the department or agency shall consult immediately with the Office of Management and Budget (OMB) about the project and its funding requirements. Where legally permissible, the department or agency shall:

(i) delay funding of the project for 30 days, or the longest period permitted by law if less than 30 days, in order to ensure adequate opportunity for public scrutiny of the project prior to commitment of funds; and

(ii) publish a description of the proposed project (or project plan) and its funding requirements on the agency's recovery website as soon as practicable before or after commitment, obligation, or expenditure of funds for the project.

(e) Executive departments and agencies, including their respective Offices of Inspector General, shall monitor compliance with the prohibition in section 1604 of Division A of the Recovery Act, referenced in paragraph (a) above, by contractors, grantees, and other recipients of Federal financial assistance (recipients). If a department or agency believes that a recipient has not complied with section 1604, then the department or agency shall (i) promptly

notify the Recovery Accountability and Transparency Board; and (ii) take appropriate corrective action that may include, but not be limited to, disallowing or otherwise recovering improperly spent amounts, imposing additional requirements on the recipient to ensure compliance with section 1604 (and other applicable prohibitions and obligations), initiating a proceeding for administrative civil penalties, and initiating a proceeding for suspension and debarment.

Sec. 3. *Ensuring Transparency of Registered Lobbyist Communications.* (a) An executive department or agency official shall not consider the view of a lobbyist registered under the Lobbying Disclosure Act of 1995, 2 U.S.C. 1601 *et seq.*, concerning particular projects, applications, or applicants for funding under the Recovery Act unless such views are in writing.

(b) Upon the scheduling of, and again at the outset of, any oral communication (in-person or telephonic) with any person or entity concerning particular projects, applications, or applicants for funding under the Recovery Act, an executive department or agency official shall inquire whether any of the individuals or parties appearing or communicating concerning such particular project, application, or applicant is a lobbyist registered under the Lobbying Disclosure Act of 1995. If so, the lobbyist may not attend or participate in the telephonic or in-person contact, but may submit a communication in writing.

(c) All written communications from a registered lobbyist concerning the commitment, obligation, or expenditure of funds under the Recovery Act for particular projects, applications, or applicants shall be posted publicly by the receiving agency or governmental entity on its recovery website within 3 business days after receipt of such communication.

(d) An executive department or agency official may communicate orally with registered lobbyists concerning general Recovery Act policy issues; provided, however, that such oral communications shall not extend to or touch upon particular projects, applications, or applicants for funding, and further that the official must contemporaneously or immediately thereafter document in writing: (i) the date and time of the contact on policy issues; (ii) the names of the registered lobbyists and the official(s) between whom the contact took place; and (iii) a short description of the substance of the communication. This writing must be posted publicly by the executive department or agency on its recovery website within 3 business days of the communication.

(e) Upon the scheduling of, and again at the outset of, any oral communications with any person or entity concerning general Recovery Act policy issues, an executive department or agency official shall inquire whether any of the individuals or parties appearing or communicating concerning such issues is a lobbyist registered under the Lobbying Disclosure Act. If so, the official shall comply with paragraph (d) above.

Sec. 4. *General Provisions.* (a) The Director of OMB shall assist and, as appropriate, issue guidance to the heads of executive departments and agencies to carry out their responsibilities under this memorandum. Within 60 days of the date of this memorandum, the Director of OMB shall review the implementation of this memorandum by executive departments and agencies and shall forward to me any recommendations for modifications or revisions to this memorandum.

(b) This memorandum does not apply to tax-related provisions in Division B of the Recovery Act.

(c) Nothing in this memorandum shall be construed to impair or otherwise affect: (i) authority granted by law or Executive Order to an executive department, agency, or the head thereof; or (ii) functions of the Director of OMB relating to budgetary, administrative, or legislative proposals.

(d) This memorandum shall be implemented consistent with applicable law and all OMB implementing guidance, and shall be subject to the availability of appropriations.

(e) This memorandum is not intended to, and does not, create any right or benefit, substantive or procedural, enforceable at law or in equity by any party against the United States, its departments, agencies, or entities, its officers, employees, or agents, or any other person.

Sec. 5. *Publication.* The Director of OMB is hereby authorized and directed to publish this memorandum in the *Federal Register*.

THE WHITE HOUSE,
Washington, March 20, 2009

[FR Doc. E9–6754
Filed 3–24–09; 8:45 am]
Billing code 3110–01–P

Rules and Regulations

Federal Register
Vol. 74, No. 56
Wednesday, March 25, 2009

This section of the FEDERAL REGISTER contains regulatory documents having general applicability and legal effect, most of which are keyed to and codified in the Code of Federal Regulations, which is published under 50 titles pursuant to 44 U.S.C. 1510.

The Code of Federal Regulations is sold by the Superintendent of Documents. Prices of new books are listed in the first FEDERAL REGISTER issue of each week.

DEPARTMENT OF ENERGY

10 CFR Part 440

[Docket No. EEWAP1201]

RIN 1904–AB84

Weatherization Assistance Program for Low-Income Persons

AGENCY: Office of Energy Efficiency and Renewable Energy, Department of Energy.

ACTION: Final rule.

SUMMARY: The U.S. Department of Energy (DOE) is expanding the definition of ''State'' under the Weatherization Assistance Program for Low-Income Persons and amending the financial assistance allocation procedure to reflect the expanded definition. The Energy Independence and Security Act of 2007 amended the Weatherization Assistance Program definition of ''State'' to include the Commonwealth of Puerto Rico and the other territories and possessions of the United States. Consistent with the statutory amendment, DOE is amending the regulatory definition of ''State,'' and amending the allocation procedure relied on to calculate the amount of financial assistance received by each State so as to include American Samoa, Guam, Commonwealth of the Northern Mariana Islands, Commonwealth of Puerto Rico, and the Virgin Islands. Further, DOE is amending the Weatherization Assistance Program regulations consistent with recent statutory amendments in the American Recovery and Reinvestment Act of 2009.

DATES: This final rule is effective March 25, 2009, and applicable on March 12, 2009.

FOR FURTHER INFORMATION CONTACT: Jean Diggs, U.S. Department of Energy, Office of Energy Efficiency and Renewable Energy, Weatherization Assistance Program, EE–2K, Room 6070, 1000 Independence Avenue, SW., Washington, DC 20585–0121, (202) 586–8506, e-mail: *jean.diggs@ee.doe.gov,* or Chris Calamita, U.S. Department of Energy, Office of the General Counsel, Forrestal Building, GC–72, 1000 Independence Avenue, SW., Washington, DC 20585, (202) 586–9507, e-mail: *Christopher.Calamita@hq.doe.gov.*

SUPPLEMENTARY INFORMATION:

I. Introduction
II. Definition of ''State''
III. Allocation of Funds
IV. American Recovery and Reinvestment Act of 2009
V. Effective Date
VI. Regulatory Analysis
VII. Congressional Notification
VIII. Approval of the Office of the Secretary

I. Introduction

Sections 411–418 of the Energy Conservation and Production Act established the Weatherization Assistance Program for Low-Income Persons (Weatherization Assistance Program). (42 U.S.C. 6861 *et seq.*) The Weatherization Assistance Program reduces energy costs for low-income households by increasing the energy efficiency of their homes, while promoting their health and safety. DOE works in partnership with State- and local-level agencies to implement the Weatherization Assistance Program. DOE's Project Management Center awards grants to State-level agencies, which then contract with local agencies.

DOE issued a notice of proposed rulemaking (NOPR) to amend the Weatherization Assistance Program regulations consistent with amendments to the Energy Conservation and Production Act under the Energy Independence and Security Act of 2007 (Pub. L. No. 110–140; December 19, 2007). (73 FR 79414; December 29, 2008) The Energy Independence and Security Act of 2007 amended the Weatherization Assistance Program definition of ''State'' to include the Commonwealth of Puerto Rico and the other territories and possessions of the United States. Consistent with the statutory amendment, DOE proposed to amend the regulatory definition of ''State,'' and to amend the allocation procedure relied on to calculate the amount of financial assistance received by each State so as to include American Samoa, Guam, Commonwealth of the Northern Mariana Islands, Commonwealth of Puerto Rico, and the Virgin Islands.

DOE received one comment in response to the NOPR, from the Governor of the Virgin Islands. The comment was generally supportive of the rule as proposed. As explained in the remainder of this notice, DOE is adopting the NOPR as proposed. Further, DOE is making additional amendments to the Weatherization Assistance Program regulations consistent with the recent statutory changes in the American Recovery and Reinvestment Act of 2009 (Pub. L. No. 111–5).

II. Definition of ''State''

DOE allocates financial assistance for weatherization to States and Indian tribes. 10 CFR 440.10 and 440.11. Section 411(c) of the Energy Independence and Security Act of 2007 amended section 412 of the Energy Conservation and Production Act to include under the definition of ''State,'' the Commonwealth of Puerto Rico, and any other territory or possession of the United States. (42 U.S.C. 6862(8)) In the NOPR, DOE proposed to amend the regulatory definition of ''State'' under the Weatherization Program consistent with the statutory definition. As proposed the definition of ''State'' would include American Samoa, Guam, Commonwealth of the Northern Mariana Islands, Commonwealth of Puerto Rico, and the Virgin Islands (hereafter collectively referred to as the U.S. territories).

The amended statutory definition of ''State'' includes territories or possessions of the United States generally, which would indicate that the territories of Palmyra Atoll and Wake Atoll would also be included. However, as explained in the NOPR, the territories of Palmyra Atoll and Wake Atoll do not have significant permanent populations to warrant inclusion in the Weatherization Program. Palmyra Atoll is a national Wildlife Refuge and access to Wake Atoll is restricted. (See, *http://www.doi.gov/oia/Firstpginfo/islandfactsheet.htm*, last visited September 30, 2008.) The purpose of the Weatherization Assistance Program is to provide grants ''for the purpose of providing financial assistance with regard to projects designed to provide for the weatherization of dwelling units, particularly those where elderly or

handicapped low-income persons reside, occupied by low-income families.'' (42 U.S.C. 6863(a)) Further DOE must ''allocate financial assistance to each State on the basis of the relative need for weatherization assistance among low-income persons throughout the States[.]'' (42 U.S.C. 6864) The absence of permanent populations on Palmyra Atoll and Wake Atoll would make the inclusion of these Atolls superfluous. As such DOE did not propose to include the territories of Palmyra Atoll and Wake Atoll in the regulatory definition of State for the purpose of the Weatherization Assistance Program.

The comment from the Governor of the Virgin Islands supported inclusion of the U.S. territories in the definition of ''State,'' and urged DOE to finalize the revised definition in advance of distributing funds made available under the American Recovery and Reinvestment Act of 2009.

DOE has concluded that the rationale for the proposed definition remains valid. Therefore, DOE is amending the definition of ''State,'' as proposed, to mean each of the States, the District of Columbia, American Samoa, Guam, Commonwealth of the Northern Mariana Islands, Commonwealth of Puerto Rico, and the Virgin Islands.

III. Allocation of Funds

Each year Congress appropriates funds to implement the Weatherization Assistance Program. A portion of the appropriated funds is used for training and technical assistance. The remaining funds, comprising the majority of the appropriated funds, are distributed to the States as program funds based on a two-part allocation.

From the total appropriation, DOE reserves funds for national training and technical assistance (T&TA) activities that benefit all States. In addition, DOE specifically allocates funding to States for T&TA activities at both the State and local levels. Prior to the American Recovery and Reinvestment Act of 2009, the total funds for national, State, and local T&TA could not exceed 10 percent of the Congressional appropriation. Section 407 of the American Recovery and Reinvestment Act of 2009 increased the percent of funds eligible for T&TA to up to 20 percent. (42 U.S.C. 6866) The remaining funds comprise the State program allocations.

If the State program allocations in a fiscal year (FY) are at or above the amount allocated to States in FY 1994 under Public Law No. 103–332 (September 30, 1994) (i.e., the funds made available to the Weatherization Assistance Program minus funds for T&TA, which equaled $209,724,761) the State program allocations are distributed according to a two-part allocation procedure. Should total funds for State program allocation fall below $209,724,761, the allocations to States are reduced proportionally. *See* 10 CFR 440.10(c).

The two-part allocation is comprised of a base allocation plus a formula allocation. *See* 10 CFR 440.10(b). The base allocation for each State is fixed, but differs for each State and was derived from each State's allocation under the appropriations for FY 1993.[1] The base allocation was developed to minimize fluctuations in funds received by States between fiscal years resulting from changes in the total amount of appropriated funds received for the Weatherization Assistance Program. The base allocation was established in response to concern that substantial fluctuation between annual funds could disrupt a State's program.

Under the two-part allocation, funds in excess of the total base allocation are allocated among States according to the formula allocation set forth in 10 CFR 440.10(b)(3). A State's formula allocation is based on three factors for each State. Factor 1, Low-Income Population, represents the share of the nation's low-income households in each State expressed as a percentage of all U.S. low-income households. Factor 2, Climatic Conditions, is obtained from the heating and cooling degrees for each State, treating the energy needed for heating and cooling proportionately. Factor 3, Residential Energy Expenditures by Low-Income Households in each State, is an approximation of the financial burden that energy use places on low-income households. The approximation is necessary because State-specific data on residential energy expenditures by low-income households is generally lacking.

In the NOPR, DOE proposed to revise how funds are allocated under the Weatherization Assistance Program so as to include the U.S. territories. The proposed revisions were based on a method for determining the base and formula allocation for the U.S. territories that was consistent with how the current allocation method for States was developed.

Essentially, the Department followed the development process used in 1995 to establish the existing allocation method (i.e., basing the allocation formula on FY 1994 allocation) under the assumption that at that time the U.S. territories were included in the Weatherization Assistance Program. DOE recognized that the data used to calculate a State's share of the funds under the 1995 rulemaking are not available for the U.S. territories. Therefore, DOE proposed to use Hawaii's information for the U.S. territories. Similar to Hawaii, the U.S. territories are in hot climates with virtually no heating load, are all islands, and share a common main fuel type used in low-income households, electricity.

A. Allocation Threshold

As discussed in the previous paragraphs, the allocation of funding under the Weatherization Assistance Program is dependent first upon whether the total funds available for allocation to the States (excluding funds for T&TA) are at or above the level made available under Public Law No. 103–322, i.e., $209,724,761. In order to make the regulations clearer, the Department is replacing the references in 10 CFR part 440 to the ''total program allocations under Public Law No. 103–322'' with the actual dollar value. This amendment does not impact the allocation process, and is solely for the purpose of making the current regulation easier to read and understand.

B. Base Allocation

To reflect the addition of the U.S. territories to the Weatherization Assistance Program, DOE is revising the base allocation to include the newly added jurisdictions, as proposed. As discussed previously, DOE relied on Hawaii's base allocation ($120,000) as the base allocation for the U.S. territories. This revision does not reduce the base allocation amount for any State, but instead increases the total base allocation value so as to include the U.S. territories.

The comment from the Governor of the Virgin Islands supported the use of data from Hawaii, although indicated that such data could be made available for the Virgin Islands. However, such data was not provided as part of the comment.

For the reasons expressed in the NOPR and in this Final Rule, DOE is adopting the Base Allocation as proposed.

C. Formula Allocation

In addition to a base allocation, DOE will now allocate weatherization funds to the U.S. territories through the formula allocation. Essentially, the weatherization funds will be based on

[1] Calculation of each State's share of the funds was based on a formula different from that in the current regulations. See, 60 FR 4480, 4482; January 23, 1995.

the U.S. territories' (1) Number of low-income households (10 CFR 440.10(b)(3)(i)), (2) number of ''heating degree'' and ''cooling degree'' days (10 CFR 440.10(b)(3)(ii) and (iii)), and (3) average residential household energy expenditures (10 CFR 440.10(b)(3)(v)). DOE recognizes that data for the third factor of the formula allocation, i.e., average residential household energy expenditures, may not be available for all the U.S. territories. In the instances in which DOE does not have such data, DOE will again rely on comparable data from a comparable State, i.e., Hawaii, as proposed. This approach does not require revisions to the regulatory text for the formula allocation.

IV. American Recovery and Reinvestment Act of 2009

Section 407 of the American Recovery and Reinvestment Act of 2009 amended several of the Weatherization Assistance Program provisions in the Energy Conservation and Production Act. The amendments under section 407—

- Increased the referenced percentage of the poverty level in the definition of ''low income'' from 150 percent to 200 percent (42 U.S.C. 6862(7));
- Increased the limit on the minimum average expenditure per dwelling unit from $2,500 to $6,500 (42 U.S.C. 6865(c)(1));
- Increased the maximum amount of appropriated funds that the Department may apply towards T&TA from 10 percent of the appropriated sums to 20 percent (42 U.S.C. 6866); and
- Extended eligibility for further financial assistance to dwelling units that had been partially weatherized under a Federal program from September 30, 1975, through September 30, 1994.

The first three of these amendments under section 407 of the American Recovery and Reinvestment Act of 2009 require updates to the Weatherization Assistance Program regulations. Today's final rule amends the regulations consistent with these changes. The time period for previously received financial assistance as it relates to dwelling eligibility is governed by the statute and is not reflected in regulation, and as such there is no existing regulation to update.

DOE finds that there is good cause to amend the Weatherization Assistance Program regulations consistent with the American Recovery and Reinvestment Act of 2009 without providing an opportunity for notice and comment as such procedures are unnecessary. DOE is establishing the maximum percent of poverty level referenced in the definition of ''low income,'' the maximum permitted expenditure per dwelling, or the maximum percent of funds permitted to be used for T&TA in accordance with the specific provisions of the statute. DOE is exercising no discretion in codifying these provisions and does not have the authority to amend the specific aspects of these provisions. Thus, no useful purpose would be served by offering an opportunity for public comment.

V. Effective Date

Today's final rule is effective on March 25, 2009. Pursuant to 5 U.S.C. 553(d)(3), the Department finds good cause that the effective date of this final rule need not be delayed. In the American Recovery and Reinvestment Act of 2009 Congress appropriated $5 billion for the Weatherization Assistance Program. The stated purposes of the American Recovery and Reinvestment Act of 2009 are—

(1) To preserve and create jobs and promote economic recovery.

(2) To assist those most impacted by the recession.

(3) To provide investments needed to increase economic efficiency by spurring technological advances in science and health.

(4) To invest in transportation, environmental protection, and other infrastructure that will provide long-term economic benefits.

(5) To stabilize State and local government budgets, in order to minimize and avoid reductions in essential services and counterproductive state and local tax increases. (Section 3(a), Pub. L. No. 11–5) Moreover, Congress directed the agencies to manage and expend the funds made available so as to achieve the specified purposes, including commencing expenditures and activities as quickly as possible consistent with prudent management. (Section 3(b), Pub. L. No. 11–5) A delay in the effective date of today's final rule would delay the allocation of weatherization assistance funds to the States including the U.S. territories.[2] DOE believes it would be contrary to the public interest to delay the allocation of weatherization funds made available under the American Recovery and Reinvestment Act of 2009. Thus, a delay to the final rule would be inconsistent with the Congressional direction to commence expenditures as quickly as possible, and thereby unnecessary, impracticable, and contrary to public interest. For the reasons stated above, DOE finds good cause, pursuant to 5 U.S.C. 553(d)(3), to waive the 30-day delay in effective date required by the rulemaking provisions of the Administrative Procedures Act.

[2] The comment from the Governor of the Virgin Islands encouraged DOE to apply the amended definition and allocation formula to funds made available under the Consolidated Security, Disaster Assistance, and Continuing Appropriations Act, 2009 (Pub. L. No. 110–329; September 30, 2008). Today's final rule will apply to fund allocation determinations made following the issuance date of today's final rule.

VI. Regulatory Analysis

A. Review under Executive Order 12866

Today's final rule is not a significant regulatory action under section 3(f)(1) of Executive Order 12866, ''Regulatory Planning and Review'' (58 FR 51735; October 4, 1993). Accordingly, today's action was not subject to review by the Office of Information and Regulatory Affairs (OIRA) in the Office of Management and Budget (OMB).

B. Review under the Regulatory Flexibility Act

The Regulatory Flexibility Act (5 U.S.C. 601 *et seq.*) requires the preparation of an initial regulatory flexibility analysis for any rule that by law must be proposed for public comment, unless the agency certifies that the rule, if promulgated, will not have a significant economic impact on a substantial number of small entities. As required by Executive Order 13272, ''Proper Consideration of Small Entities in Agency Rulemaking,'' (67 FR 53461; August 16, 2002), DOE published procedures and policies on February 19, 2003, to ensure that the potential impacts of its rules on small entities are properly considered during the rulemaking process (68 FR 7990). DOE has made its procedures and policies available on the Office of General Counsel's Web site: *http://www.gc.doe.gov.*

DOE has reviewed today's final rule for the Weatherization Assistance Program under the provisions of the Regulatory Flexibility Act. Today's final rule incorporates statutory changes made to the Weatherization Assistance Program. The amendments include the U.S. territories in the Weatherization Assistance Program to the same extent as States are currently included. This rule will directly affect States and individual recipients of assistance. It will not have an economic impact on small entities. On this basis, DOE certifies that today's final rule will not have a significant economic impact on a substantial number of small entities. Accordingly, DOE has not prepared a regulatory flexibility analysis for this rulemaking.

C. Review Under the National Environmental Policy Act of 1969

DOE has determined that today's final rule is covered under the Categorical Exclusion found in DOE's National Environmental Policy Act regulations at paragraph A.6. of Appendix A to subpart D, 10 CFR part 1021. That Categorical Exclusion applies to rulemakings that are strictly procedural, such as rulemaking establishing the administration of grants. Today's final rule establishes the procedure for allocating funds under the Weatherization Assistance Program so as to cover, in addition to the States and the District of Columbia, the U.S. territories. The regulations will not have any independent environmental impact. Accordingly, DOE has not prepared an environmental assessment or an environmental impact statement.

D. Review Under Executive Order 13132, ''Federalism''

Executive Order 13132, 64 FR 43255 (August 4, 1999), imposes certain requirements on agencies formulating and implementing policies or regulations that pre-empt State law or that have federalism implications. Agencies are required to examine the constitutional and statutory authority supporting any action that would limit the policymaking discretion of the States and carefully assess the necessity for such actions. DOE has examined today's final rule and has determined that it will not pre-empt State law and will not have a substantial direct effect on the States, on the relationship between the national government and the States, or on the distribution of power and responsibilities among the various levels of government. No further action is required by Executive Order 13132.

E. Review Under Executive Order 12988

With respect to the review of existing regulations and the promulgation of new regulations, section 3(a) of Executive Order 12988, Civil Justice Reform, 61 FR 4729 (February 7, 1996), imposes on Executive agencies the general duty to adhere to the following requirements: (1) Eliminate drafting errors and ambiguity; (2) write regulations to minimize litigation; and (3) provide a clear legal standard for affected conduct rather than a general standard and promote simplification and burden reduction. The review required by sections 3(a) and 3(b) of Executive Order 12988 specifically requires that Executive agencies make every reasonable effort to ensure that the regulation: (1) Clearly specifies the pre-emptive effect, if any; (2) clearly specifies any effect on existing Federal law or regulation; (3) provides a clear legal standard for affected conduct while promoting simplification and burden reduction; (4) specifies the retroactive effect, if any; (5) adequately defines key terms; and (6) addresses other important issues affecting clarity and general draftsmanship under any guidelines issued by the Attorney General. Section 3(c) of Executive Order 12988 requires Executive agencies to review regulations in light of applicable standards in sections 3(a) and 3(b) to determine whether they are met or it is unreasonable to meet one or more of them.

DOE has completed the required review and determined that, to the extent permitted by law, today's final rule meets the relevant standards of Executive Order 12988.

F. Review Under the Unfunded Mandates Reform Act of 1995

The Unfunded Mandates Reform Act of 1995 (Pub. L. 104–4) generally requires Federal agencies to examine closely the impacts of regulatory actions on State, local, and tribal governments. Subsection 101(5) of Title I of that law defines a Federal intergovernmental mandate to include any regulation that would impose upon State, local, or tribal governments an enforceable duty, except a condition of Federal assistance or a duty arising from participating in a voluntary Federal program. Title II of that law requires each Federal agency to assess the effects of Federal regulatory actions on State, local, and tribal governments, in the aggregate, or to the private sector, other than to the extent such actions merely incorporate requirements specifically set forth in a statute. Section 202 of that title requires a Federal agency to perform a detailed assessment of the anticipated costs and benefits of any rule that includes a Federal mandate which may result in costs to State, local, or tribal governments, or to the private sector, of $100 million or more. Section 204 of that title requires each agency that proposes a rule containing a significant Federal intergovernmental mandate to develop an effective process for obtaining meaningful and timely input from elected officers of State, local, and tribal governments.

Today's final rule will not impose a Federal mandate on State, local or tribal governments, and it will not result in the expenditure by State, local, and tribal governments in the aggregate, or by the private sector, of $100 million or more in any one year. Accordingly, no assessment or analysis is required under the Unfunded Mandates Reform Act of 1995.

G. Review Under the Treasury and General Government Appropriations Act of 1999

Section 654 of the Treasury and General Government Appropriations Act of 1999 (Pub. L. 105–277) requires Federal agencies to issue a Family Policymaking Assessment for any rule that may affect family well-being. Today's final rule will not have any impact on the autonomy or integrity of the family as an institution. Accordingly, DOE has concluded that it is not necessary to prepare a Family Policymaking Assessment.

H. Review Under the Treasury and General Government Appropriations Act of 2001

Section 515 of the Treasury and General Government Appropriations Act, 2001 (44 U.S.C. 3516, note) provides for agencies to review most disseminations of information to the public under guidelines established by each agency pursuant to general guidelines issued by OMB. OMB's guidelines were published at 67 FR 8452 (February 22, 2002), and DOE's guidelines were published at 67 FR 62446 (October 7, 2002). DOE has reviewed today's final rule under the OMB and DOE guidelines and has concluded that it is consistent with applicable policies in those guidelines.

I. Review Under Executive Order 13211

Executive Order 13211, ''Actions Concerning Regulations That Significantly Affect Energy Supply, Distribution, or Use,'' 66 FR 28355 (May 22, 2001), requires Federal agencies to prepare and submit to the OMB a Statement of Energy Effects for any proposed significant energy action. A ''significant energy action'' is defined as any action by an agency that promulgated or is expected to lead to promulgation of a final rule, and that: (1) Is a significant regulatory action under Executive Order 12866, or any successor order; and (2) is likely to have a significant adverse effect on the supply, distribution, or use of energy, or (3) is designated by the Administrator of the Office of Information and Regulatory Affairs (OIRA) as a significant energy action. For any proposed significant energy action, the agency must give a detailed statement of any adverse effects on energy supply, distribution, or use, should the proposal be implemented, and of reasonable alternatives to the action and their expected benefits on energy supply, distribution, and use.

Today's regulatory action will not have a significant adverse effect on the supply, distribution, or use of energy and is therefore not a significant energy action. Accordingly, DOE has not prepared a Statement of Energy Effects.

J. Review Under Executive Order 13175

Executive Order 13175. ''Consultation and Coordination with Indian Tribal Governments'' (65 FR 67249; November 9, 2000), requires DOE to develop an accountable process to ensure ''meaningful and timely input by tribal officials in the development of regulatory policies that have tribal implications.'' ''Policies that have tribal implications'' refers to regulations that have ''substantial direct effects on one or more Indian tribes, on the relationship between the Federal Government and Indian tribes, or on the distribution of power and responsibilities between the Federal Government and Indian tribes.'' Today's regulatory action is not a policy that has ''tribal implications'' under Executive Order 13175.

Under the Weatherization Assistance Program, a tribal organization may qualify as a unit of general purpose local government and, therefore, be eligible to apply for funds. See 10 CFR 440.11. Today's regulatory action will not change the eligibility of Indian tribes to apply for or receive funds under the Weatherization Assistance Program. Today's regulatory action will include the U.S. territories in the allocation of available funds. DOE has reviewed today's final rule under Executive Order 13175 and has determined that it is consistent with applicable policies of that Executive Order.

VII. Congressional Notification

As required by 5 U.S.C. 801, DOE will report to Congress on the promulgation of this rule prior to its effective date. The report will state that it has been determined that the rule is not a ''major rule'' as defined by 5 U.S.C. 804(2).

VIII. Approval of the Office of the Secretary

The Secretary of Energy has approved publication of today's final rule.

List of Subjects in 10 CFR Part 440

Administrative practice and procedure, Energy conservation, Grant programs—energy, Grant programs—housing and community development, Housing standards, Indians, Individuals with disabilities, Reporting and record keeping requirements, Weatherization.

Issued in Washington, DC, on March 12, 2009.

Steve Chalk,

Acting Assistant Secretary, Energy Efficiency and Renewable Energy.

■ For the reasons set forth in the preamble, DOE amends part 440 of chapter II of title 10, Code of Federal Regulations, to read as follows:

PART 440—WEATHERIZATION ASSISTANCE PROGRAM FOR LOW-INCOME PERSONS

■ 1. The authority citation for Part 440 continues to read as follows:

Authority: 42 U.S.C. 6861 *et seq.*; 42 U.S.C. 7101 *et seq.*

■ 2. Section 440.3 is amended by revising the definitions of ''low income'' and ''State'' to read as follows:

§ 440.3 Definitions.

* * * * *

Low Income means that income in relation to family size which:

(1) At or below 200 percent of the poverty level determined in accordance with criteria established by the Director of the Office of Management and Budget, except that the Secretary may establish a higher level if the Secretary, after consulting with the Secretary of Agriculture and the Secretary of Health and Human Services, determines that such a higher level is necessary to carry out the purposes of this part and is consistent with the eligibility criteria established for the weatherization program under Section 222(a)(12) of the Economic Opportunity Act of 1964;

(2) Is the basis on which cash assistance payments have been paid during the preceding twelve month-period under Titles IV and XVI of the Social Security Act or applicable State or local law; or

(3) If a State elects, is the basis for eligibility for assistance under the Low Income Home Energy Assistance Act of 1981, provided that such basis is at least 200 percent of the poverty level determined in accordance with criteria established by the Director of the Office of Management and Budget.

* * * * *

State means each of the States, the District of Columbia, American Samoa, Guam, Commonwealth of the Northern Mariana Islands, Commonwealth of Puerto Rico, and the Virgin Islands.

* * * * *

■ 3. Section 440.10 is amended by:

■ a. Removing the phrase ''total program allocations under Pub. L. 103–332'' in paragraph (b) introductory text and adding in its place ''$209,724,761'';

■ b. Revising Table 1 in paragraph (b)(1) and paragraph (c) to read as follows:

§ 440.10 Allocation of funds.

* * * * *

(b) * * *

(1) * * *

BASE ALLOCATION TABLE

State	Base allocation
Alabama	$1,636,000
Alaska	1,425,000
Arizona	760,000
Arkansas	1,417,000
California	4,404,000
Colorado	4,574,000
Connecticut	1,887,000
Delaware	409,000
District of Columbia	487,000
Florida	761,000
Georgia	1,844,000
Hawaii	120,000
Idaho	1,618,000
Illinois	10,717,000
Indiana	5,156,000
Iowa	4,032,000
Kansas	1,925,000
Kentucky	3,615,000
Louisiana	912,000
Maine	2,493,000
Maryland	1,963,000
Massachusetts	5,111,000
Michigan	12,346,000
Minnesota	8,342,000
Mississippi	1,094,000
Missouri	4,615,000
Montana	2,123,000
Nebraska	2,013,000
Nevada	586,000
New Hampshire	1,193,000
New Jersey	3,775,000
New Mexico	1,519,000
New York	15,302,000
North Carolina	2,853,000
North Dakota	2,105,000
Ohio	10,665,000
Oklahoma	1,846,000
Oregon	2,320,000
Pennsylvania	11,457,000
Rhode Island	878,000
South Carolina	1,130,000
South Dakota	1,561,000
Tennessee	3,218,000
Texas	2,999,000
Utah	1,692,000
Vermont	1,014,000
Virginia	2,970,000
Washington	3,775,000
West Virginia	2,573,000
Wisconsin	7,061,000
Wyoming	967,000
American Samoa	120,000
Guam	120,000
Puerto Rico	120,000
Northern Mariana Islands	120,000
Virgin Islands	120,000
Total	171,858,000

* * * * *

(c) Should total program allocations for any fiscal year fall below $209,724,761, then each State's program allocation shall be reduced from its allocated amount under a total program allocation of $209,724,761 by the same

percentage as total program allocations for the fiscal year fall below $209,724,761.

* * * * *

■ 4. Section 440.18 is amended by revising paragraphs (a) and (c) introductory text to read as follows:

§ 440.18 Allowable expenditures.

(a) Except as adjusted, the expenditure of financial assistance provided under this part for labor, weatherization materials, and related matters included in paragraphs (c)(1) through (9) of this section shall not exceed an average of $6,500 per dwelling unit weatherized in the State, except as adjusted in paragraph (c) of this section.

* * * * *

(c) The $6,500 average will be adjusted annually by DOE beginning in calendar year 2010 and the $3,000 average for renewable energy systems will be adjusted annually by DOE beginning in calendar year 2007, by increasing the limitations by an amount equal to:

* * * * *

■ 5. Section 440.22 is amended by revising paragraph (a) to read as follows:

§ 440.22 Eligible dwelling units.

(a) A dwelling unit shall be eligible for weatherization assistance under this part if it is occupied by a family unit:

(1) Whose income is at or below 200 percent of the poverty level determined in accordance with criteria established by the Director of the Office of Management and Budget,

(2) Which contains a member who has received cash assistance payments under Title IV or XVI of the Social Security Act or applicable State or local law at any time during the 12-month period preceding the determination of eligibility for weatherization assistance; or

(3) If the State elects, is eligible for assistance under the Low-Income Home Energy Assistance Act of 1981, provided that such basis is at least 200 percent of the poverty level determined in accordance with criteria established by the Director of the Office of Management and Budget.

* * * * *

■ 6. Section 440.23 is amended by revising paragraph (e) to read as follows:

§ 440.23 Oversight, training, and technical assistance.

* * * * *

(e) The Secretary may reserve from the funds appropriated for any fiscal year an amount not to exceed 20 percent to provide, directly or indirectly, training and technical assistance to any grantee or subgrantee. Such training and technical assistance may include providing information concerning conservation practices to occupants of eligible dwelling units.

[FR Doc. E9–6628 Filed 3–24–09; 8:45 am]

BILLING CODE 6450–01–P

DEPARTMENT OF ENERGY

Federal Energy Regulatory Commission

18 CFR Part 37

[Docket Nos. RM05–17–004 and RM05–25–004; Order No. 890–C]

Preventing Undue Discrimination and Preference in Transmission Service

March 19, 2009.

AGENCY: Federal Energy Regulatory Commission.

ACTION: Order on Rehearing and Clarification.

SUMMARY: The Federal Energy Regulatory Commission affirms its basic determinations in Order Nos. 890, 890–A and 890–B, granting rehearing and clarification regarding certain revisions to its regulations and the *pro forma* open-access transmission tariff, or OATT, adopted in Order Nos. 888 and 889 to ensure that transmission services are provided on a basis that is just, reasonable, and not unduly discriminatory. The Commission grants clarification of the degree of consistency required in the calculation of available transfer capability by transmission providers and denies rehearing regarding the requirement to undesignate network resources used to serve off-system sales

DATES: *Effective Date:* This rule will become effective March 25, 2009.

FOR FURTHER INFORMATION CONTACT: W. Mason Emnett, Office of the General Counsel—Energy Markets, Federal Energy Regulatory Commission, 888 First Street, NE., Washington, DC 20426, (202) 502–6540.

SUPPLEMENTARY INFORMATION:

Before Commissioners: Jon Wellinghoff, Acting Chairman; Suedeen G. Kelly, Marc Spitzer, and Philip D. Moeller.

1. On February 16, 2007, the Commission issued Order No. 890,[1] addressing and remedying opportunities for undue discrimination under the *pro forma* Open Access Transmission Tariff (OATT) adopted in Order No. 888.[2] The *pro forma* OATT was intended to foster greater competition in wholesale power markets by reducing barriers to entry in the provision of transmission service. In the ten years since Order No. 888, however, flaws in the *pro forma* OATT undermined its ability to realize the core objective of remedying undue discrimination. The Commission acted in Order No. 890 to correct these flaws by reforming the terms and conditions of the *pro forma* OATT in several critical areas, including the calculation of available transfer capability (ATC), the planning of transmission facilities, and the conditions of services offered by each transmission provider.

2. In Order Nos. 890–A and 890–B, the Commission largely affirmed the reforms adopted in Order No. 890. The Commission concluded that, taken together, these reforms will better enable the *pro forma* OATT to achieve the core objective of remedying undue discrimination in the provision of transmission service. The Commission did, however, grant rehearing and clarification regarding certain revisions to its regulations and the *pro forma* OATT. NorthWestern Corporation (NorthWestern) and South Carolina Electric and Gas Co. (SCE&G) have requested further rehearing and clarification of Order No. 890–B on certain discrete issues, which we address below.

I. Reforms of the OATT

A. Consistency and Transparency of ATC Calculations

3. In Order No. 890–B, the Commission among other things affirmed a clarification provided in Order No. 890–A that adjacent transmission providers must coordinate and exchange data and assumptions to achieve consistent available transfer capability (ATC) values on either side of a single interface.[3] The Commission stated that it disagreed with petitioners arguing that consistent ATC values

---

[1] *Preventing Undue Discrimination and Preference in Transmission Service,* Order No. 890, 72 FR 12,266 (March 15, 2007), FERC Stats. & Regs. ¶ 31,241, *order on reh'g,* Order No. 890–A, 73 FR 2984 (January 16, 2008), FERC Stats. & Regs. ¶ 31,261 (2007), *order on reh'g,* Order No. 890–B, 123 FERC ¶ 61,299 (2008).

[2] *Promoting Wholesale Competition Through Open Access Non-Discriminatory Transmission Services by Public Utilities; Recovery of Stranded Costs by Public Utilities and Transmitting Utilities,* Order No. 888, 61 FR 21,540 (May 10, 1996), FERC Stats. & Regs. ¶ 31,026 (1996), *order on reh'g,* Order No. 888–A, 62 FR 12,274 (Mar. 14, 1997), FERC Stats. & Regs. ¶ 31,048 (1997), *order on reh'g,* Order No. 888–B, 81 FERC ¶ 61,248 (1997), *order on reh'g,* Order No. 888–C, 82 FERC ¶ 61,046 (1998, *aff'd in relevant part sub nom. Transmission Access Policy Study Group v. FERC,* 225 F.3d 667 (DC Cir. 2000)(*TAPS* v. *FERC*), *aff'd sub nom. New York* v. *FERC,* 535 U.S. 1 (2002).

[3] Order No. 890–B at P 15.

should not be interpreted to mean identical ATC values, but acknowledged that factors such as timing of reservation requests, acceptances, and confirmations, and multiple interfaces between and among transmission providers, can make it difficult to achieve coincidental, identical postings of ATC values on both sides of an interface. The Commission reiterated that, if all of the ATC components and certain data inputs and assumptions are consistent, the ATC calculation methodologies being finalized by the North American Electric Reliability Corporation (NERC) through the reliability standards development process should produce predictable and sufficiently accurate, consistent, equivalent, and replicable results.

Requests for Clarification and Rehearing

4. NorthWestern contends that, while requiring two adjacent transmission providers to post identical ATC at a single interface appears on its face to be reasonable, that requirement can have unintended and negative consequences. NorthWestern states the requirement may allow transmission customers to be able to block other market participants from requesting ATC without placing a transmission service request or following OATT requirements. NorthWestern offers an example of two transmission providers with a single interface and a customer that requests service on that interface from only one of the transmission providers. NorthWestern contends that the requirement to make ATC postings on either side of an interface identical would force the second transmission provider to reduce ATC on its side of the interface if the first transmission provider grants service to the customer, even though no request for service was submitted on the second transmission system, circumventing the first-come, first-served nature of transmission service under the *pro forma* OATT.

5. NorthWestern contends that how transmission providers account for capacity benefit margin (CBM) and transmission reliability margin (TRM) on either side of an interface can have the same impact as a transmission service request. If one transmission provider sets aside capacity for CBM or TRM, NorthWestern contends that those set asides will force the transmission provider to decrement ATC on the other side of the interface. While NorthWestern understands the Commission's desire to remove the potential for undue discrimination by requiring ATC calculations to be consistent and transparent, it contends that directing transmission providers to have identical ATC postings on either side of an interface will allow transmission providers and customers to block access to transmission service, either intentionally or not.

6. NorthWestern therefore asks the Commission to grant rehearing to require that ATC on either side of an interface be consistent, rather than identical. NorthWestern suggests that a consistency requirement could be structured such that the transmission providers posting ATC for a single interface be able to transparently provide all necessary information that allows interested parties to determine why differences in ATC exist.

Commission Determination

7. The Commission clarifies that it did not intend in Order No. 890–B to require transmission providers to post identical ATC values on either side of an interface in every instance and at all times. While ATC values on either side of an interface may be identical in some instances, in others they may not. To the extent necessary, the Commission grants rehearing of Order No. 890–B to eliminate reference to the posting of identical ATC values on either side of an interface.

8. In Order No. 890–A, the Commission clarified that adjacent transmission providers must coordinate and exchange data and assumptions to achieve consistent ATC values on either side of a single interface.[4] The Commission explained that this requirement is applicable to any neighboring transmission providers no matter whether they use the same or different ATC methodologies. Several petitioners requested rehearing and clarification of this requirement, generally raising two arguments. First, they suggested that it would be more appropriate to require consistency of total transfer capability (TTC) on either side of an interface instead of consistency of ATC values.[5] Second, they argued that any requirement to achieve consistent ATC values on either side of an interface should not be interpreted to mean identical ATC values.[6] In response, the Commission stated that it disagreed with petitioners arguing that consistent ATC values should not be interpreted as identical, but went on to acknowledge that various factors (such as timing of reservation requests, acceptances and confirmation, or multiple interfaces between transmission providers) could make it difficult for transmission providers to achieve coincidental, identical postings of ATC values on either side of an interface.[7] The Commission therefore reiterated that the ATC calculation methodologies being finalized by NERC ''should produce predictable and sufficiently accurate, consistent, equivalent, and replicable results.'' [8]

9. The requirement, then, is not to achieve identical postings of ATC values on either side of an interface, as NorthWestern contends. The requirement is, instead, to achieve consistency in such values through the development of ATC calculation methodologies that produce sufficiently accurate, consistent, equivalent, and replicable results. In some instances, it may be possible for transmission providers under these methodologies to achieve identical ATC values on either side of an interface. In others, such as when there are differences in reservation status or when there are multiple interfaces between the transmission providers, it may not be possible or even practical to achieve identical values.

10. Since the issuance of Order No. 890–B, NERC has submitted to the Commission six proposed Reliability Standards governing the calculation of ATC. In a companion order issued today, the Commission proposes to approve these Reliability Standards as just, reasonable, not unduly discriminatory or preferential, and in the public interest.[9] The Commission will address in that proceeding whether the proposed Reliability Standards satisfy the requirements of Order No. 890, as clarified above.

B. Designation of Network Resources

11. In Order No. 890–B, the Commission among other things clarified that the requirement for a network customer and the transmission provider's merchant function to undesignate each portion of each resource used to support a sale of system power does not apply in the event the buyer and seller are located on the same transmission system and the buyer designates the system power as a network resource. The Commission explained that, when a seller's network

[4] Order No. 890–A at P 52. The Commission noted that the anticipated consistency is for available capability in the same direction across an interface.

[5] *See* Order No. 890–B at P 9.

[6] *See id.* P 9–10.

[7] *Id.* P 15.

[8] *Id.*

[9] *Mandatory Reliability Standards for the Calculation of Available Transfer Capability, Capacity Benefit Margins, Transmission Reliability Margins, Total Transfer Capability, and Existing Transmission Commitments and Mandatory Reliability Standards for the Bulk-Power System,* Notice of Proposed Rulemaking, Docket No. RM08–19–000, *et al.* (March 19, 2009). 126 FERC ¶ 61,249 (2009).

resources are used to support an on-system sale, the buyer meets the informational requirements of section 29.2(v) of the *pro forma* OATT simply by identifying the seller's system as the resource. In comparison, when a buyer does not designate a system purchase as a network resource, the point-to-point transmission reservation for taking delivery of the purchase and the corresponding resource-specific undesignation by the seller provide the transmission provider with the information it needs to accurately model the effect of the transaction on its transmission system and set aside ATC accordingly.

Requests for Clarification and Rehearing

12. SCE&G argues on rehearing that the Commission has unreasonably restricted the types of system sales that can be made from network resources without undesignation. SCE&G argues that, for purposes of performing transmission modeling and ATC calculations in conjunction with a given third-party sale, the transmission provider has all of the information that it needs regardless of whether the buyer is located on-system or off-system. According to SCE&G, transmission modeling relating to off-system sales is a routine matter in the industry and the practice of supporting such sales via slice-of-system undesignations has presented no obstacles to the execution of such modeling or any associated calculations. SCE&G contends that, when modeling transmission flows associated with an off-system sale, the neighboring systems (of the buyer and the seller) are evaluated on a system-wide basis and calculations reflecting the amount of the sale are properly performed in modeling the flow from the system of the seller to that of the buyer.

13. SCE&G contends that modeling for slice-of-system sales, whether on-system or off-system, is designed to ensure not only accuracy, but also economic efficiency. SCE&G states that the modeling for such sales takes into account load forecasts for the relevant time period and, on the basis of such data, includes projections of which specific plants are likely to be involved in generating the incremental power that supports the sale, which in turn is reflected in the relevant economic dispatch plan. Because load forecasts invariably differ to at least some degree from the actual load that ultimately materializes, SCE&G contends that the modeling of any system sale includes appropriate alternate dispatch scenarios, to ensure that unit dispatch is performed in the correct economic order no matter what the actual load may eventually prove to be. For off-system sales, SCE&G states, the transmission provider takes the additional steps of recalculating ATC for the relevant interface and ensuring proper adjustment to posted ATC values.

14. If sellers are denied the ability to use a slice-of-system undesignation to support an off-system sale, SCE&G states that their only alternative is to make unit-by-unit undesignations, which SCE&G contends is unworkable and inaccurate and could result in units having to be dispatched out of economic order. SCE&G states that purchasers often use such off-system firm transactions as a tool for ensuring their compliance with NERC and regional reliability council reserve requirements and related reliability requirements and that these transactions garner greater reliability benefits by virtue of being based on a share of an entire portfolio of generating units, rather than a single unit. SCE&G therefore asks the Commission to revisit its determination in Order No. 890–B and safeguard the ability to access and rely on off-system system sales.

15. SCE&G argues that it is particularly ironic that the Commission's initial clarification regarding the use of network resources to supply system sales is the outgrowth of a clarification sought by SCE&G in comments on the NOPR in this proceeding. In those comments, SCE&G requested that the Commission clarify ''exactly how to undesignate and redesignate [network resources] when the Transmission Provider/Network Customer is selling a block of firm power *out of the system*.'' [10] SCE&G argues that, in responding to the request in Order No. 890, the Commission expressly acknowledged the off-system nature of the sales at issue and, therefore, its statement that ''firm third-party sales may be made from an undesignated portion of [network resources]'' appeared to apply to off-system sales.[11] SCE&G contends that the Commission's determination in Order No. 890–B therefore cannot be squared with either the history of the Commission's express treatment of the issue or standard industry practice.

16. Should the Commission decline to grant rehearing as requested, SCE&G argues that the Commission at a minimum should grandfather long-term, still-continuing off-system sales sourced from designated network resources that were entered into prior to Order No. 890–B in reliance of the Commission's prior policy.

Commission Determination

17. The Commission affirms the requirement that network resources used to supply sales of system power to off-system buyers must first be undesignated.[12] As we explained in Order No. 890, transactions in which a buyer and seller are both network customers located on the same transmission system are distinct from transactions involving sales of energy from a network customer to an off-system buyer. In the latter circumstance, the off-system buyer will not be using network service to take delivery from the host transmission provider and, instead, must identify the points of receipt and delivery for the transaction on the host transmission provider's system, *i.e.*, the points where capacity and energy will be received from the seller and delivered to the buyer. The point-to-point transmission reservation and the corresponding resource-specific undesignation provide the transmission provider with the information it needs regarding the location of particular resources being used by the seller to source the transaction in order to model the effect of the transaction on its transmission system and set aside ATC accordingly.

18. SCE&G contends that a resource-specific undesignation of resources is unnecessary for a transmission provider to model an economic dispatch of resources to determine which specific plants are likely to be involved in generating the incremental power to support an off-system sale. Even if that is true in some circumstances, whether or not the transmission provider is able to analytically determine the likely units used to support a power sale does not affect the need of the buyer to identify the points of receipt and delivery on the host transmission system where capacity and energy will be received from the seller and delivered to the buyer. Because the buyer is not a network customer of the host transmission provider, it cannot use network service to take delivery. In order for the buyer to schedule point-to-point service to take delivery, the transmission customer must identify the point of receipt and delivery for the transaction. Even if the transmission provider has accurately modeled the seller's optimal use of resources to supply the transaction, it is unclear how the buyer and seller would reflect that dispatch in the point-to-point

[10] Reply Comments of South Carolina Electric & Gas Co. at 15, Docket No. RM05–25–000, *et al.* (Sep. 20, 2006) (emphasis added).

[11] *Citing* Order No. 890 at PP 1567 and 1582.

[12] *See* Order No. 890–B at P 206.

reservation used to deliver the energy other than by identifying the particular point(s) of receipt for the transaction, which is tantamount to a resource-specific undesignation of associated network resources.

19. Transactions in which the buyer of system energy is a network customer located on-system are clearly distinguishable from those in which the buyer and seller are located on different systems. In the former circumstance, the host transmission provider knows the normal operating levels and variable energy costs for both network customers' resources, the load forecasts for both network customers' network loads, and any transmission constraints requiring redispatch. Section 29.2(v) of the *pro forma* OATT requires such information to be submitted for each of the two designations (the original designation of the capacity by the seller, and the subsequent designation of the capacity by the buyer) such that the local transmission provider is able to use such information to simultaneously determine the expected dispatches for *each* network customer. From these predictions, reasonable operating and contingency scenarios can be modeled in order to accurately determine what transmission capacity should be reasonably set aside to accommodate both network customers. That is not the case when one party to the transaction is located in another transmission system.

20. As noted above, NERC recently submitted for Commission review proposed Reliability Standards to govern the calculation of ATC. One of the issues the Commission directed transmission providers to address in those Reliability Standards is the effect on ATC of designating and undesignating network resources.[13] Although the Commission proposes in Docket Nos. RM08–19–000, *et al.*, to approve the proposed Reliability Standards, the Commission notes that NERC failed to address the modeling of network resources and its impact on ATC calculations. The Commission proposes to direct NERC to develop a modification to the Reliability Standards to address this requirement. We encourage SCE&G and any other interested party to provide comments in that proceeding regarding the interaction of network resource designations and the calculation of ATC. Upon review of those comments and final action in that proceeding, the Commission may revisit its network resource policies as necessary to reflect the Reliability Standards implemented by NERC.

21. In the meantime, we disagree with SCE&G that the Commission's network resource policies unreasonably impair the ability of network customers to meet reserve requirements or related reliability requirements. In Order Nos. 890–A and 890–B, the Commission made clear that network customers could use designated resources to fulfill obligations under a reserve sharing program.[14] In other proceedings, the Commission has permitted transmission providers to amend their OATTs to allow network customers to use designated resources to supply power to other control areas during system emergencies.[15] Moreover, the Commission has stated repeatedly that transmission providers are free to propose additional variations to the *pro forma* OATT to accommodate more flexible network resource policies if the particular ATC methodology used by a transmission provider allows for such flexibility.[16]

22. We also disagree with SCE&G that it would be appropriate to grandfather all long-term, still-continuing off-system sales sourced from designated network resources that were entered into prior to Order No. 890–B. In response to SCE&G's NOPR comments, the Commission clearly stated that firm third-party sales may be made only from an undesignated portion of network resources and that a network customer must submit undesignations for each portion of each resource supporting the third-party sale.[17] A number of petitioners sought rehearing and clarification of that statement, which led the Commission to conclude in Order No. 890–A that system sales could be supplied by network resources without undesignation if the system sale is itself designated as a network resource by the buyer.[18] The Commission, however, did not specifically state that the buyer had to be a network customer on the same transmission system as the seller in order to qualify for this exception from the undesignation requirement. As a result, confusion arose regarding Order No. 890–A that was resolved in Order No. 890–B.[19]

23. It would therefore only be appropriate to allow an exception to the undesignation requirement for off-system system sales that occurred after the issuance of Order No. 890–A, but before the clarification in Order No. 890–B. During that six-month period, it may have been reasonable for a network customer to interpret the Commission's statement in Order No. 890–A as allowing for off-system sales from network resource capacity undesignated on a general (as opposed to resource-specific) basis if the buyer designated the purchase as an external network resource with its own transmission provider. Prior to issuance of Order No. 890–A, however, there was no indication that such sales would be permitted without undesignation on a resource-specific basis.

24. As such, we agree that a power sale initiated on or after the issuance date of Order No. 890–A, but before the effective date of Order No. 890–B, may be accommodated with capacity undesignated on a general basis, as described in paragraph 947 of Order No. 890–A. Any network customer making such power sales, and which submitted a general undesignation for such power sales between those dates, is not considered to be in violation of section 30.4 as a result of operation of such resources. Network customers may rely on such undesignation(s) until the redesignation date (for resources temporarily terminated) or the expiration of the current term of the power sales contract (for resources indefinitely terminated).

II. Information Collection Statement

25. The Office of Management and Budget (OMB) regulations require that OMB approve certain information collection requirements imposed by an agency.[20] The revisions to the information collection requirements for transmission providers adopted in Order No. 890 were approved under OMB Control Nos. 1902–0233. This order does not substantively alter those requirements. OMB approval of this order is therefore unnecessary. However, the Commission will send a copy of this order to OMB for informational purposes only.

III. Document Availability

26. In addition to publishing the full text of this document in the **Federal Register**, the Commission provides all interested persons an opportunity to view and/or print the contents of this document via the Internet through FERC's Home Page (*http://www.ferc.gov*)

[13] *See Mandatory Reliability Standards for the Bulk-Power System,* Order No. 693, FERC Stats. & Regs. ¶ 31,242, at P 1041, *order on reh'g,* Order No. 693–A, 120 FERC ¶ 61,053 (2007).

[14] *See* Order No. 890–A at P 948; Order No. 890–B at P 215.

[16] *See Arizona Public Service Co.,* 121 FERC ¶ 61,246 at P 42 (2007).

[16] *See* Order No. 890–A at P 951; Order No. 890–B at P 210.

[17] *See* Order No. 890 at P 1582.

[18] *See* Order No. 890–A at P 947.

[19] *See* Order No. 890–B at P 205.

[20] 5 CFR 1320 (2007).

and in FERC's Public Reference Room during normal business hours (8:30 a.m. to 5 p.m. Eastern time) at 888 First Street, NE., Room 2A, Washington, DC 20426.

27. From FERC's Home Page on the Internet, this information is available on eLibrary. The full text of this document is available on eLibrary in PDF and Microsoft Word format for viewing, printing, and/or downloading. To access this document in eLibrary, type the docket number excluding the last three digits of this document in the docket number field.

28. User assistance is available for eLibrary and the FERC's Web site during normal business hours from FERC Online Support at 202–502–6652 (toll free at 1–866–208–3676) or e-mail at *ferconlinesupport@ferc.gov,* or the Public Reference Room at (202) 502–8371, TTY (202) 502–8659. E-mail the Public Reference Room at *public.referenceroom@ferc.gov.*

IV. Effective Date and Congressional Notification

29. This order does not substantively alter the requirements of Order Nos. 890, 890–A or 890–B and, therefore, will become effective as of the date of publication in the **Federal Register**.

By the Commission.

Kimberly D. Bose,

Secretary.

[FR Doc. E9–6502 Filed 3–24–09; 8:45 am]

BILLING CODE 6717–01–P

DEPARTMENT OF ENERGY

Federal Energy Regulatory Commission

18 CFR Part 40

[Docket No. RM06–22–000; Order No. 706–B]

Mandatory Reliability Standards for Critical Infrastructure Protection

Issued March 19, 2009.

AGENCY: Federal Energy Regulatory Commission.

ACTION: Order on Clarification.

SUMMARY: The Commission clarifies that the facilities within a nuclear generation plant in the United States that are not regulated by the U.S. Nuclear Regulatory Commission are subject to compliance with the eight mandatory ''CIP'' Reliability Standards approved in Commission Order No. 706.

DATES: *Effective Date:* This rule will become effective March 25, 2009.

FOR FURTHER INFORMATION CONTACT:

Jonathan First (Legal Information), Office of General Counsel, 888 First Street, NE., Washington, DC 20426, (202) 502–8529.

Regis Binder (Technical Information), Office of Electric Reliability, 888 First Street, NE., Washington, DC 20426, (301) 665–1601.

SUPPLEMENTARY INFORMATION: Before Commissioners: Jon Wellinghoff, Acting Chairman; Suedeen G. Kelly, Marc Spiter, and Philip D. Moeller. 1. In this order, the Commission clarifies the scope of the Critical Infrastructure Protection (CIP) Reliability Standards approved in Order No. 706 [1] to assure that no ''gap'' occurs in the applicability of these Standards.[2] In particular, each of the CIP Reliability Standards provides that facilities regulated by the U.S. Nuclear Regulatory Commission (NRC) are exempt from the Standard. It has come to the attention of the Commission that NRC regulations do not extend to all equipment within a nuclear power plant. Thus, to assure that there is no ''gap'' in the regulatory process, the Commission clarifies that the ''balance of plant'' equipment within a nuclear power plant in the United States that is not regulated by the NRC is subject to compliance with the CIP Reliability Standards approved in Order No. 706.

I. Background

2. The North American Electric Reliability Corporation (NERC), the Commission-certified Electric Reliability Organization (ERO), developed the CIP Reliability Standards that require certain users, owners and operators of the Bulk-Power System, including generator owners and operators, to comply with specific requirements to safeguard critical cyber assets. In January 2008, pursuant to section 215 of the Federal Power Act (FPA),[3] the Commission approved the CIP Reliability Standards. In addition, pursuant to section 215(d)(5) of the FPA,[4] the Commission directed the ERO to develop modifications to the CIP Reliability Standards to address specific concerns identified by the Commission.

3. Each CIP Reliability Standard includes an exemption for facilities regulated by the NRC. For example, Reliability Standard CIP–002–1 provides:

> The following are exempt from Standard CIP–002: Facilities regulated by the U.S. Nuclear Regulatory Commission * * *.[5]

4. In an April 8, 2008 public joint meeting of the Commission and the NRC, staff of both Commissions discussed cyber security at nuclear power plants. While indicating that the NRC has proposed regulations to address cyber security at nuclear power plants, NRC staff raised a concern regarding a potential gap in regulatory coverage.[6] In particular, NRC staff indicated that the NRC's proposed regulations on cyber security would not apply to all systems within a nuclear power plant. NRC staff explained:

> The NRC's cyber requirements are not going to extend to power continuity systems. They do not extend directly to what is not directly associated with reactor safety security or emergency response. * * *
>
> As a result, and when you look at the CIP standards that were issued, there is a discrete statement in each of the seven or eight standards where it specifically exempts facilities regulated by the United States Nuclear Regulatory Commission from compliance with those CIP Standards. So there is an issue there in the sense that our regulations for cyber security go up to a certain point, and end.[7]

5. On September 18, 2008, the Commission issued an Order on Proposed Clarification,[8] explaining its concern that a gap may exist in the regulatory process due to the provision in each of the CIP Reliability Standards exempting ''facilities regulated by the U.S. Nuclear Regulatory Commission.'' On the understanding that some facilities within a nuclear power plant would not be subject to compliance with cyber security regulations developed by the NRC, the Commission proposed to clarify that the facilities

---

[1] *Mandatory Reliability Standards for Critical Infrastructure Protection*, Order No. 706, 122 FERC ¶ 61,040, *order on reh'g*, Order No. 706–A, 123 FERC ¶ 61,174 (2008).

[2] CIP Reliability Standards CIP–002–1 through CIP–009–1 (CIP Reliability Standards) were approved by Order No. 706. Reliability Standard CIP–001–1, which pertains to sabotage reporting, was not a subject of Order No. 706 and does not include the exemption statement that is the subject of this order.

[3] 16 U.S.C. 824o (2006).

[4] 16 U.S.C. 824o(d)(5)(2006).

[5] Reliability Standard CIP–002–1, section 4.2 (Applicability).

[6] In December 2008, the NRC approved a final rule that included cyber security-related regulations applicable to nuclear power plant licensees. The regulations, referred to herein as the ''NRC cyber security regulations,'' have not been published in the **Federal Register** at this time and are not currently in effect. They will be codified at 10 CFR 73.54. *See Final Rulemaking—Power Reactor Security Requirements*, SECY–08–0099 (Jul. 9, 2008); *Press Release: NRC Approves Final Rule Expanding Security Requirements for Nuclear Power Plants*, (Dec. 17, 2008), *available at http://www.nrc.gov/reading-rm/doc-collections/news/2008/08–227.html.*

[7] April 8, 2008, Joint Meeting of the Nuclear Regulatory Commission and Federal Energy Regulatory Commission, Tr. at 77–78.

[8] *Mandatory Reliability Standards for Critical Infrastructure Protection*, Order on Proposed Clarification, 124 FERC ¶ 61,247 (2008) (Proposed Clarification).

within a nuclear power plant in the United States that are not regulated by the NRC are subject to compliance with the CIP Reliability Standards approved in Order No. 706. The Commission explained its proposal and sought comment on not only the Proposed Clarification, but also two additional questions: (1) Whether a clear delineation exists between those facilities in a nuclear power plant which relate to safety and security, and the non-safety related ''balance of plant,'' and if a clear delineation does not exist, whether there is a need for owners and/or operators of nuclear power plants to identify the specific facilities that pertain to reactor safety, security or emergency response and are subject to NRC jurisdiction, and the balance of plant that is subject to the eight CIP Reliability Standards; and (2) if nuclear power plants were to be required to implement the CIP Reliability Standards, whether Table 3 of the implementation plan approved in Order No. 706 should control the implementation schedule.[9]

6. The Proposed Clarification was published in the **Federal Register**, 73 FR 55,459 (Sept. 25, 2008). In response, comments were filed by 23 interested persons, 17 of which own and/or operate nuclear power plants. A list of the commenters appears in the Appendix to this Order. These comments have assisted the Commission and are addressed in the discussion, below.

II. Discussion

7. For the reasons discussed below, the Commission finds that the CIP Reliability Standards are applicable to all equipment within a nuclear power plant located in the United States that will not be subject to NRC's cyber security regulations. The thrust of many comments is that the NRC regulates the entire nuclear power plant including power continuity systems and, therefore, the Commission's Proposed Clarification is unnecessary. The Commission is not persuaded by these arguments, which either reference back to voluntary industry standards developed by the nuclear industry, or mischaracterize the nature and extent of NRC's regulations with regard to the entire nuclear power plant. Indeed, NRC Staff comments reiterate that many portions of a nuclear power plant are not regulated by NRC.

8. Nuclear power plants can have a significant effect on the reliability of the Bulk-Power System. Prior to the enactment of section 215 of the FPA, the electric industry had voluntary cyber security provisions and a system of self-certifications. However, Congress imposed a framework for mandatory and enforceable Reliability Standards, explicitly including cyber security, applicable to all users, owners and operators of the Bulk-Power System. That framework charges the Commission with the oversight of the development and enforcement of the Reliability Standards.

9. In previous orders, the Commission has emphasized that the application of the Reliability Standards must remain uniform and consistent.[10] This is necessary both to protect the reliability of the Bulk-Power System and to ensure equity in the application of Reliability Standards. The Commission has found that ''section 215 seeks to prevent an instability, an uncontrolled separation or a cascading failure, whether resulting from either a sudden disturbance, including a cybersecurity incident, or an unanticipated failure of the system elements.'' [11] Therefore, compliance monitoring must occur on an ongoing and proactive basis. Due to the preventive aspect of section 215 and the requirements of the Reliability Standards, compliance monitoring and enforcement of the Reliability Standards are not triggered only by a past event or a cyber security incident. The ERO and Regional Entities have several proactive monitoring processes, including, but not limited to, spot checks and audits, to verify that users, owners and operators are in compliance with the Reliability Standards and to maintain the reliable operation of the Bulk-Power System. This order balances the concerns expressed by commenters with the Commission's responsibility for consistency, as well as rigor and uniformity in the compliance monitoring and enforcement of the Reliability Standards.

10. In response to comments, we have refined certain aspects of the Proposed Clarification. However, we continue to believe that a gap in the application of appropriate cyber security standards would exist absent our clarification in this Order.

A. Meaning of the Term ''Facility''

11. Before addressing our determination on the Proposed Clarification, we discuss a terminology issue raised by NRC Staff, NEI and other commenters. As mentioned above, the CIP Reliability Standards exempt ''facilities regulated by the U.S. Nuclear Regulatory Commission.'' The Proposed Clarification indicated that a nuclear power plant consists of multiple ''facilities'' within its boundaries, some but not all of which are regulated by the NRC. For example, we stated that ''NRC's regulation of a nuclear power plant is limited to the facilities that are associated with reactor safety or emergency response.'' [12]

Comments

12. Commenters state that the term ''facility,'' as used in the nuclear industry, refers to the entire nuclear power plant. For example, NRC Staff comments that the term ''facility'' is defined by the Atomic Energy Act of 1954 as a ''production or utilization facility,'' and the term is commonly synonymous with the entire nuclear power plant, ''that comprises the entire set of buildings, cooling towers, assets, switchyards, systems, and equipment within the owner-controlled area * * *.'' [13] The NRC Staff asserts that the use of the term ''facilities'' in the Proposed Clarification might effectively exempt all portions of nuclear power plants from the CIP Reliability Standards and thus not close the regulatory gap that the Commission intended to address. Rather, the NRC Staff explains that, when referring to discrete elements within a nuclear power plant, the NRC generally uses the term, ''structures, systems and components.''

13. NEI, supported by a number of commenters, similarly states that the Commission used the term ''facilities'' in a manner that is not consistent with the use of the term in the nuclear industry. NEI states that the nuclear industry typically uses the term ''facility'' to mean the entire nuclear power plant, and that the equivalent in nuclear parlance of ''facilities,'' as used by the Commission, are the ''structures, systems, components and networks (''SSC'') which provide the various functions for plant operation and shut down.'' [14]

[9] Proposed Clarification, 124 FERC ¶ 61,247 at P 9.

[10] *See Rules Concerning Certification of the Electric Reliability Organization; and Procedures for the Establishment, Approval, and Enforcement of Electric Reliability Standards*, Order No. 672, 71 FR 8662 (Feb. 17, 2006), FERC Stats. & Regs., Regulations Preambles 2006–2007 ¶ 31,204, at P 41 and P 290 (2006), *order on reh'g*, Order No. 672–A, FERC Stats. & Regs., Regulations Preambles 2006–2007 ¶ 31,212 (2006); *Mandatory Reliability Standards for the Bulk-Power System*, Order No. 693, 72 FR 16416 (Apr. 4, 2007), FERC Stats. & Regs. ¶ 31,242 at P 298 (2007).

[11] Order No. 693, FERC Stats. & Regs. ¶ 31,242 at P 24, *order on reh'g*, Order No. 693–A, 120 FERC ¶ 61,053 (2007); *see also* 16 U.S.C. 824o(a)(4) (2006) (defining Reliable Operation).

[12] Proposed Clarification, 124 FERC ¶ 61,247 at P 6.

[13] NRC Staff Comments at 1.

[14] NEI Comments at 2.

Commission Determination

14. It appears that the use of the term ''facility'' in the Proposed Clarification differs from the common use of that term in the nuclear regulatory environment. For purposes of this order, we use the term ''nuclear power plant'' to describe the entire nuclear generating plant, including the entire set of buildings, cooling towers, assets, switchyards, systems, and equipment within the owner-controlled area. This term is consistent with NRC Staff's explanation.

15. NRC Staff states that it generally uses the term ''structures, systems and components'' to refer to discrete elements of the nuclear power plant regulated by the NRC, and suggests that the Commission uses ''facilities'' in an analogous way. We will use the term ''structures, systems and components'' to reference any element of equipment, systems or networks of equipment, or portions within a nuclear power plant within an entity's ownership or control. NRC Staff follows its description of what structures comprise a nuclear power plant with the note, ''many of which are not directly regulated by the NRC.'' For purposes of this order, we will use the term ''balance of plant'' to reference those portions of the nuclear power plant to which NRC Staff refers, as that term is defined by the NRC's regulations.[15]

B. Regulatory Gap—Need for the Clarification

16. In the Proposed Clarification, the Commission explained that:

> The plain meaning of the exemption language in the eight CIP Reliability Standards at issue is that only those facilities within a nuclear generation plant that are regulated by the NRC are exempt from those Standards. The exemption language in the eight CIP Reliability Standards neither states, nor implies, that *all* facilities within a nuclear generation plant are exempt from the Standards, regardless of whether they are subject to NRC regulation. However, the Commission believes there is a need to assure that there is no potential gap in the regulation of critical cyber assets at nuclear generation plants.[16]

The Commission, thus, proposed to clarify that Reliability Standards CIP–002–1 through CIP–009–1 apply to the facilities, *i.e.*, structures, systems and components, within a nuclear power plant that are not regulated by the NRC.

Comments

17. NRC Staff and NERC agree with the Commission that clarification of the CIP Reliability Standards is needed. NEI and other stakeholders in the nuclear industry oppose the clarification, arguing that it is unnecessary because no regulatory gap exists since the NRC's jurisdiction can reach all equipment at nuclear power plants that might need cyber security protection.

18. NRC Staff comments that much of the equipment within the owner-controlled area of the nuclear power plant is not directly regulated by the NRC. Thus, NRC Staff supports the Commission's proposal and suggests certain refinements to the proposal to provide additional clarity to distinguish ''the scope of plant functions that are subject to NRC requirements from those functions that are subject to applicable FERC-regulated grid reliability requirements.'' [17]

19. NERC states that it agrees with the Commission's understanding of the delineation between those ''facilities'' within a nuclear power plant whose functions are necessary and sufficient for reactor safety, security or emergency response versus the portion of the rest of the plant whose functions are necessary for Bulk-Power System reliability. NERC agrees with the Commission that there is a need for more clarity with regard to the applicability of CIP Reliability Standards to nuclear power plants, and recommends an expedited modification to the Standards.

20. NEI, and other commenters,[18] many of which support NEI's comments, assert that the Commission's Proposed Clarification is unnecessary, as there is no regulatory gap in the oversight of critical cyber assets at nuclear power plants. According to NEI and others, the NRC regulates the entire nuclear power plant, including cyber security for balance of plant systems that may be critical to Bulk-Power System reliability. Commenters identify three sources of NRC's authority: the nuclear industry's comprehensive security program developed by NEI (NEI 04–04), NRC's ''Maintenance Rule,'' and NRC's recently-promulgated cyber security rules. In addition, NEI and others contend that application of CIP Reliability Standards to nuclear power plants would result in dual regulation of equipment, which would be complicated and inefficient.

Nuclear Industry Cyber Security Guideline, NEI 04–04

21. NEI and other commenters [19] argue that the application of CIP Reliability Standards is not warranted because the nuclear industry has made a binding commitment to implement a comprehensive cyber security program developed by NEI and endorsed by NRC.[20] NEI explains that, pursuant to this program, existing digital assets at nuclear power plants are analyzed for cyber vulnerabilities and necessary mitigation plans are established and implemented. According to NEI, all nuclear power plants implemented NEI 04–04 on or before May 1, 2008.

22. NEI explains that, in February 2002, the NRC issued Order EA–02–026, ''Interim Safeguards and Security Compensation Measures for Nuclear Power Plants,'' [21] which included required actions to address cyber security concerns. According to NEI, as a ''supplement'' to implementation of this NRC order, the nuclear industry committed to implement NEI 04–04, which was designed to protect plant systems, including all those pertinent to balance of plant. NEI states that implementation of the NEI 04–04 cyber security program extends to plant generation equipment up to and including the first breaker out from the main transformer to the switchyard breaker. According to NEI, in response to a system vulnerability identified in 2007, both industry and NRC relied on NEI 04–04 in determining that the first breaker out from the transformer to the switchyard is within the boundary of the nuclear power plant.[22]

23. NEI states that, in 2005, NRC staff endorsed NEI 04–04 as an acceptable method for establishing and maintaining a cyber security program at nuclear power plants. It cites to the NRC Inspection Manual, which states that a performance deficiency can exist if a licensee fails to meet a self-imposed standard. Thus, NEI contends that, because licensees have self-imposed NEI 04–04 through a binding initiative, NRC

[15] The NRC's regulations define the Balance of Plant as: ''the remaining systems, components, and structures that comprise a complete nuclear power plant and are not included in the nuclear steam supply system.'' The Nuclear Steam Supply System is defined as consisting of ''the reactor core, reactor coolant system, and related auxiliary systems including the emergency core cooling system; decay heat removal system; and chemical volume and control system.'' 10 CFR 170.3 (2008).

[16] Proposed Clarification, 124 FERC ¶ 61,247 at P 7 (emphasis in original). As discussed above, the term facilities as used in the Proposed Clarification was intended to apply to structures, systems and components within a nuclear power plant.

[17] NRC Comments at 1.

[18] *E.g.*, AEP, Ameren, Arizona Public Service, Dominion, Duke, Entergy, Exelon, FirstEnergy, Luminant, PG&E, PPL Companies, PSEG, and Wolf Creek.

[19] *E.g.*, AEP, Arizona Public Service, Duke, Exelon, Luminant, PG&E, PSEG, Southern and Wolf Creek.

[20] NEI Comments at 5–8, citing to NEI 04–04 Revision 1, ''Power Security Program for Nuclear Reactors'' (April 2006) (NEI 04–04).

[21] All Operating Power Licensees; Order Modifying Licenses, 67 FR 9792 (Mar. 4, 2002).

[22] NEI Comments at 6.

has the regulatory authority to inspect and enforce the program's requirements.[23]

24. NEI and other commenters, including Duke, Entergy and Exelon, contend that NRC's current oversight is adequate and the existing cyber security program is ''functionally equivalent'' to the CIP Reliability Standards.

NRC's Maintenance Rule

25. NEI, Exelon and Southern argue that NRC regulates the ''balance of plant,'' and focus on NRC's ''Maintenance Rule'' in particular to support their argument.[24] The Maintenance Rule requires a licensee to implement a monitoring program that includes both safety related and non-safety related structures, systems and components.[25] The Maintenance Rule identifies as within the scope of the monitoring program, structures, systems and components:

(b)(2)(i) That are relied upon to mitigate accidents or transients or are used in plant emergency operating procedures; or (b)(2)(ii) Whose failure could prevent safety-related structures, systems, and components from fulfilling their safety-related function; or (b)(2)(iii) Whose failure could cause a reactor scram or actuation of a safety-related system.[26]

NEI states that NRC may take enforcement action for violations of the Maintenance Rule, and includes examples of citations for failures of non-safety systems. According to NEI, implementing guidance for the Maintenance Rule, developed by industry and endorsed by NRC, provides further evidence that structures, systems and components pertaining to the balance of plant must be monitored.[27]

26. NEI thus argues that:

The NRC regulates any [structure, system or component] in a nuclear power plant that has both a direct or indirect impact on safety, security, or emergency response systems. The NRC's regulations extend to all systems that could cause a reactor scram, diminish the ability to mitigate the consequences of a reactor scram, or cause the actuation of a safety system. These are the same systems that constitute the balance of the plant for Continuity of Operations purposes.[28]

According to NEI, the failure of a structure, system or component as the result of a cyber security breach affects the reliability of equipment operation and is consequently within the scope of the Maintenance Rule. Ameren, which owns and operates a nuclear power plant, comments that it is unable to identify any structures, systems or components that are not currently subject to cyber security regulation by the NRC that could impact electric reliability.

NRC Cyber Security Regulations

27. NEI explains that NRC has proposed regulations that would specifically address cyber security at nuclear power plants.[29] According to NEI, Exelon, Progress Energy and Southern, NRC's cyber security regulations would apply to both safety functions and ''support systems and equipment which if compromised would adversely impact safety, security or emergency preparedness functions.''[30] Further, the NRC regulations would require licensees to identify the cyber security assets they will protect under the program, and the list of identified assets becomes the basis for inspection by NRC Staff. NEI states that most balance of plant systems support both nuclear safety and continuity of operations.

28. NEI contends that there are ''few, if any,'' systems within the boundary of a typical nuclear power plant that support only continuity of operations. Thus, according to NEI, since the failure of such systems could cause a reactor scram or actuation of a safety system, the proposed NRC regulation would apply and there would be no regulatory gap. NEI also claims that, as with all NRC regulation, the requirements of 10 CFR 73.54 would be assessed, inspected and enforced.

Dual Regulation

29. NEI, EEI and other commenters[31] express concern that if the Commission issues its Proposed Clarification, dual regulation will result and cause overlapping requirements, contradictory requirements, duplicate inspections and recordkeeping, and duplicate worker training and qualifications. They assert that confusion and conflicts will result with respect to applicability of regulations if the Commission's clarification separates digital assets within a nuclear power plant into some that are subject to NRC regulations and others that are subject to CIP Reliability Standards. AEP states that the proposed application of the CIP Reliability Standards could result in increased costs and complexity without a commensurate increase in reliability or protection.

30. NEI, EEI and other commenters[32] argue the most effective way to eliminate any potential gap in regulatory oversight is to maintain a single set of regulations for the entire nuclear power plant under the jurisdiction of the NRC. IESO/Hydro One assert that nuclear power plants should only be regulated by one entity, and cyber security at nuclear power plants must be under the jurisdiction of the NRC or the Canadian nuclear authority.

Commission Determination

31. As discussed below, the Commission is not persuaded by the nuclear industry commenters' arguments that the NRC regulates all balance of plant equipment within a nuclear power plant.

Voluntary Industry Standard NEI 04–04

32. The nuclear industry's development of a cyber security program under NEI 04–04 is commendable. However, compliance with NEI 04–04 is voluntary. As mandated by the Energy Policy Act of 2005, the Commission must ensure that the Commission-certified ERO develops Reliability Standards and provides for consistent monitoring and enforcement of such standards. The nuclear industry's voluntary commitment to NEI 04–04 does not satisfy the Energy Policy Act's mandate and is not adequate assurance that the reliability of the Bulk-Power System is protected. Therefore, the Commission cannot rely upon NEI 04–04 to meet its obligations under the Energy Policy Act of 2005.

33. While NEI maintains that NEI 04–04 is subject to NRC regulatory and enforcement authority, NRC Staff has disavowed this position with regard to non-safety security and emergency preparedness related cyber security

[23] Exelon, Luminant and Progress Energy also claim that NEI 04–04 is mandatory and enforceable by NRC. Likewise, APS contends that compliance with NEI 04–04 is not voluntary because, through NEI membership, all nuclear power plants are contractually bound to follow the program.

[24] In addition, numerous commenters state that they support NEI's comments. *E.g.*, EEI, AEP, Arizona Public Service, Dominion, Kansas City and PG&E.

[25] *Requirements for Monitoring the Effectiveness of Maintenance at Nuclear Power Plants*, 56 FR 31306 (Jul. 10, 1991) (Maintenance Rule). *See also* 10 CFR 50.65.

[26] 10 CFR 50.65(b)(2)(i)–(iii). NRC's Glossary defines a ''scram'' as ''[t]he sudden shutting down of a nuclear reactor, usually by rapid insertion of control rods, either automatically or manually by the reactor operator. May also be called a reactor trip.'' NERC Glossary, *available at http://www.nrc.gov/reading-rm/basic-ref/glossary*.

[27] NEI Comments at 4, citing NUMARC 93–01, ''Industry Guideline for Monitoring the Effectiveness of Maintenance at Nuclear Power Plants,'' and NRC Regulatory Guide 1.160.

[28] NEI Comments at 5.

[29] *See supra* n. 6.

[30] To be codified at 10 CFR 73.54(a)(1)(iv).

[31] *E.g.,* Ameren, Exelon, Progress Energy, PPL and PSEG.

[32] *E.g.,* Arizona Public Service, Entergy, PSEG, Dominion, Exelon, Luminant, Ontario Power, Southern, Wolf Creek, and PG&E.

assets within a nuclear power plant.[33] While NEI characterizes NEI 04–04 as a ''supplement'' to NRC Order EA–02–026, the NRC order did not mandate the development and implementation of the industry-developed program. We understand that, on occasion, NRC Staff will endorse an industry-developed program or guidance document as one acceptable manner to comply with NRC regulations. The industry-developed cyber security program, however, was not developed as a means to comply with an NRC regulation. Thus, while the NRC Staff simply endorsed NEI 04–04 as ''an acceptable method for establishing and maintaining a cyber security program at nuclear power plants,'' [34] the scope of this endorsement falls short of documenting that NEI 04–04 is mandatory and enforceable by the NRC.

34. Further, we do not agree with commenters' claims that NEI 04–04 is mandatory because entities have made a contractually binding commitment to NEI to implement the program. Again, while such proactive commitments by industry are laudable, they do not and cannot substitute for a government regulation subject to compliance and enforcement, including civil penalties for non-compliance.

NRC Regulations

35. The Commission also rejects the claim of NEI and other commenters that there is no regulatory gap and the Commission's clarification is unnecessary because relevant NRC regulations apply to all structures, systems and components within a nuclear power plant, both safety and non-safety related, including the equipment in the balance of plant.

36. Commenters point to NRC's Maintenance Rule, which requires nuclear power plant licensees to monitor the effectiveness of maintenance activities for safety-significant plant equipment. In promulgating the Maintenance Rule, NRC explained that, while it considered having the rule apply to all structures, systems and components in a nuclear power plant, including the balance of plant, the final rule was more limited.[35] While the Maintenance Rule expressly includes both safety related and non-safety related (*i.e.*, balance of plant) structures, systems and components, NRC limited the scope of the rule to include only those balance of plant structures, systems and components ''whose failure could most directly threaten public health and safety.'' [36] This limitation is set forth in subsection (b) of the Maintenance Rule, which describes the scope of the maintenance monitoring program required pursuant to subsection (a) of the rule. In sum, the Maintenance Rule contemplates that there will be balance of plant structures, systems and components that are not subject to the rule.

37. NEI and other commenters also claim that the NRC's then-proposed, and now recently approved, cyber security regulations demonstrate that there is, in fact, no regulatory gap. However, as indicated by the NRC Staff's comments, the NRC cyber security regulations have limited application to balance of plant. The NRC cyber security regulations will apply to safety-related functions, security functions, emergency preparedness and ''support systems and equipment which, if compromised, would adversely impact safety security and emergency preparedness functions.'' [37]

38. We disagree with nuclear industry commenters that contend that this latter provision is so broad as to include the entire balance of plant. Rather, similar to the Maintenance Rule, this provision identifies a subset of non-safety structures, systems and components that are subject to the NRC cyber security regulations. The remainder of the balance of plant equipment will not be subject to the NRC cyber security regulations. NRC Staff apprised the Commission of this limitation and the potential for a regulatory gap at a public meeting of the two commissions, when stating ''The NRC's cyber requirements are not going to extend to power continuity systems. They do not extend directly to what is not directly associated with reactor safety, security or emergency response.'' [38]

Dual Regulation

39. Numerous nuclear industry commenters raise concerns that the Commission's proposal would result in nuclear power plant licensees having to comply with two sets of regulations, both NRC regulations and CIP Reliability Standards. According to commenters, this would likely cause overlapping requirements, contradictory requirements, duplicate inspections and other burdens.

40. The Commission is not persuaded by these comments. First, the Commission believes that the possible burden, confusion and inefficiency is speculative, and may well be overstated by commenters. We note that no commenter states that any of the CIP Reliability Standards conflict with the NRC's cyber security regulations. While transition issues will invariably occur, it is possible that, for example, nuclear power plant licensees can minimize any possible burden by developing a single operating manual that integrates both NRC regulations and CIP Reliability Standards. In any case, commenters have not set forth an adequate justification for the Commission and the ERO to forego their authority so that certain critical cyber assets are not subject to any mandatory oversight. In addition, we believe that concerns over possible contradictory requirements or duplicative inspections may be addressed through further regulatory coordination, discussed below.

C. Delineation of Equipment Within a Nuclear Power Plant and Modification of the Exemption Text

41. In the Proposed Clarification, the Commission requested comments on whether there is a clear delineation between equipment within a nuclear power plant that pertains to reactor safety, security or emergency response and the non-safety portion of the balance of plant. The Commission asked whether there is a need for owners and/or operators of nuclear power plants to identify the specific facilities that pertain to reactor safety, security or emergency response and subject to NRC regulation, and the balance of plant that

[33] NRC Staff Comments at 1.

[34] NEI Comments, Appendix E (December 23, 2005 letter from NRC, Director, Office of Nuclear Security and Incident Response to NEI, Vice President, Nuclear Operations).

[35] *Maintenance Rule,* 56 FR 31306 at 31314–15. NRC indicated that this limitation of the scope was in part a reaction to commenter concerns that ''many [structures, systems or components] in the [balance of plant] have no nexus to public health and safety * * *.'' *Id.* at 31315.

[36] *Id.* at 31315. NRC explained that this scope is consistent with NRC's authority pursuant to sections 161 and 182 of the Atomic Energy Act to protect the public health and safety related to nuclear power plant safety. *Id.* at 31314–15. *See also Pacific Gas & Electric Corp.* v. *State Energy Resources & Conservation and Development Commission,* 461 U.S. 190, 210 n.22 (1983) (concluding that the Atomic Energy Act did not displace other agencies'—Federal, state and local—jurisdiction over the generation, sale and transmission of electric energy, as the NRC's jurisdiction was limited to the protection of the public's health and safety from the particular risks posed by nuclear material); *English* v. *General Electric Co.,* 496 U.S. 76, 82 (1990) (finding ''NRC * * * is concerned primarily with public health and safety'').

[37] *See supra* n. 6, to be codified at 10 CFR 73.54(a)(1)(iv).

[38] Proposed Clarification Order, 124 FERC ¶ 61,247 at P 5, quoting April 8, 2008, Joint Meeting of the NRC and the Commission, Tr. at 77–78. Likewise, in its written comments, NRC staff explains that ''[t]he NRC regards 'facility' as referring to the entire power generating plant, that comprises the entire set of buildings, cooling towers, assets, switchyards, systems and equipment within the owner-controlled area, many of which are not directly regulated by the NRC.'' NRC Staff Comments at 1 (emphasis added).

is subject to the CIP Reliability Standards.

Comments

42. NEI, Exelon and others [39] assert that there is a clear delineation between equipment within a nuclear power plant related to safety and security and equipment that constitutes balance of plant. NEI comments that under the existing nuclear cyber security programs, all digital assets have been identified and evaluated, and cyber security risk parameters have been established for assets which are nuclear-significant and those needed to maintain continuity of operation. Similarly, Exelon and Southern explain that, due to various designs of nuclear power plants, the delineation may vary from plant to plant. Therefore, each licensee identifies the structures, systems, and components that are ''nuclear significant'' and those that impact continuity of power, *i.e.*, Bulk-Power System reliability. NEI, Exelon, Southern and other commenters maintain that this delineation is not relevant since NRC cyber security regulations apply to the balance of plant.

43. IESO/Hydro One assert that it is not possible, from either a procedural or technical standpoint, to establish a clear demarcation between facilities that relate to reactor safety or emergency response, and those that relate to reliability of the electric grid since the nuclear plant system is an interconnected and complex model. Breaking up this model would be confusing and technically difficult, according to IESO/Hydro One. Ontario Power notes that there are no ''balance of plant'' concerns in Canada since the Canadian Nuclear Safety Commission has jurisdiction over the entire nuclear power plant.

44. FirstEnergy asserts that, notwithstanding the ability to delineate between equipment, the Commission's inquiry is premised on the incorrect assumption that a line can be drawn between safety-related facilities regulated by the NRC and non-safety-related facilities that are not directly regulated by the NRC. FirstEnergy comments that, in fact, much equipment within a nuclear power plant that is categorized as balance of plant may have an indirect impact on safety or emergency response. It maintains that any attempt to separate equipment into two groupings for the purpose of creating two cyber security regulatory schemes would be technically challenging, potentially unsafe, and beyond the Commission's general expertise. PSEG and Ameren provide similar comments, and Ameren suggests that the delineation of the specific structures, systems and components regulated by NRC and the Commission should occur on a plant-by-plant basis with an opportunity for the owner or operator to obtain guidance as to whether its categorization is acceptable.

45. On a related matter, several commenters recommend changes to the exemption provision of the CIP Reliability Standards to better delineate the scope of NRC's regulations. NERC states that the delineation provided by its proposed revised exemption language for the Applicability sections of the CIP Reliability Standards is clear and adequately addresses the delineation issues raised by the Commission. For example, NERC proposes to expedite a modification to the exemption provision of the CIP Reliability Standards to reflect that ''digital computer and communications systems and networks within a U.S. nuclear power plant * * * that are regulated and enforced by the U.S. Nuclear Regulatory Commission are exempt from the requirements of this standard.'' [40] Other commenters also recommend changes to the exemption provision of the CIP Reliability Standards to clarify which equipment would be subject to NRC's cyber security regulations, as opposed to the CIP Reliability Standards. NRC Staff proposes to clarify the exemption as follows: ''[a]ll portions of a nuclear power plant * * * that fall within the regulatory jurisdiction and authority pertaining to cyber security of the NRC are exempt from the CIP Reliability Standards. * * *'' [41]

46. NEI recommends that the Commission direct NERC to modify the exemption language in the CIP Reliability Standards to state:

> Nuclear safety-related and important-to-safety systems and networks, security systems and networks, emergency preparedness systems and networks including offsite communications, and support systems and equipment which if compromised would adversely impact safety, security or emergency preparedness functions regulated by the U.S. Nuclear Regulatory Commission or the Canadian Nuclear Safety Commission.[42]

47. APS, Luminant, PG&E and Wolf Creek offer variations on the NEI proposal. For example, APS supports NEI's suggested change to existing CIP exemption language but would follow the ''adversely impact safety,'' phrase with the additional phrase ''plant reliability (continuity of power).''

Commission Determination

48. Based on the comments of NEI and other commenters, we understand that nuclear power plant licensees maintain a clear delineation between equipment within a nuclear power plant that pertains to reactor safety, security or emergency response, and equipment that pertains to balance of plant. Further, as discussed above, the NRC's cyber security regulations may apply to certain equipment within the balance of plant in some respects. However, it appears that the delineation of which balance of plant equipment may be subject to the NRC cyber security regulations is not yet fully accomplished and will likely be articulated separately for each nuclear power plant, with the line of regulatory demarcation differing from plant to plant. Moreover, while NRC Staff indicates that there are ''many'' components of balance of plant that will not be subject to the NRC cyber security regulations, NEI and other industry commenters assert that there are few, if any.

49. To resolve this matter in a manner that assures that no regulatory gap occurs, and also provides certainty to nuclear power plant licensees, the Commission requires that all balance of equipment within a nuclear power plant is subject to the CIP Reliability Standards. This approach provides clarity and certainty because, as indicated above, nuclear power plant licensees understand a clear delineation between equipment within a nuclear power plant that pertains to reactor safety, security or emergency response, and equipment that pertains to balance of plant. This is certainly with the scope of the Commission's and ERO's authority pursuant to section 215(b) of the FPA.[43]

50. Further, a nuclear power plant licensee may seek an exception from the ERO to the extent that the licensee believes that specific equipment within the balance of plant is subject to NRC cyber security regulations. If the ERO grants the exception, that equipment within the balance of plant would not be subject to compliance with the CIP Reliability Standards. We would expect that the ERO would make such determinations with the consultation of

[39] *E.g.*, Dominion, Duke, Luminant, PG&E, Southern and Wolf Creek.

[40] NERC Comments at 3.

[41] NRC Staff Comments at 1.

[42] NEI Comments at 14.

[43] 16 U.S.C. 824o(b). Section 215(b) of the FPA sets forth the Commission's jurisdiction over all ''users, owners and operators of the bulk-power system.''

NRC and oversight of Commission staff. Thus, to further the development of this ERO process, the ERO should consider the appropriateness of developing a memorandum of understanding with the NRC, or revising existing agreements, to address such matters as NRC staff consultation in the exception application process and sharing of Safeguard Information. The Commission believes that with the above two-part approach, *i.e.*, subjecting all balance of plant equipment within a nuclear power plant to the CIP Reliability Standards, with exceptions allowed via a process implemented by the ERO, nuclear power plant licensees will have a bright-line rule that eliminates the potential regulatory gap and provides certainty; and a plant-specific equipment exception process to avoid dual regulation where appropriate.

51. While balance of plant equipment will be subject to the CIP Reliability Standards, this does not mean that every such asset must meet all of the requirements of the CIP Reliability Standards. For example, such equipment should be considered pursuant to Reliability Standard CIP–002–1 to identify critical cyber assets.

52. With regard to the recommended changes to the exemption language of the CIP Reliability Standards, we believe that the above discussion adequately addresses our concerns. We leave to the discretion of the ERO whether a modification to further refine the exemption language, to reflect the findings of this order, is needed.

D. Regulatory Coordination

53. NRC Staff recommends the development of a memorandum of understanding to outline scope, clarify agency roles and responsibilities, and provide specific technical requirements related to the application and administration of regulations pertaining to the protection of critical digital assets at nuclear power plants. Similarly, NEI, EEI and other commenters urge a coordinated approach to cyber security oversight at nuclear power plants to avoid redundancies and avoid unnecessary burdens on licensees.

54. Further, EEI, Exelon and the PSEG Companies request that the Commission consider the roles of the ERO and the NRC in the application, enforcement and administration of the CIP Reliability Standards as applied to nuclear power plants, including considering the implications of the Safeguards Information requirements set forth in 10 CFR 73.22.

Commission Determination

55. We agree that it is advisable for the two commissions to coordinate their respective cyber security-related activities with regard to nuclear power plants. However, for purposes of this proceeding, we need not resolve this question regarding the need for a memorandum of understanding between the two commissions.

E. Implementation Schedule

56. The Proposed Clarification requested comment on an appropriate implementation schedule timetable for owners and operators of nuclear power plants to comply with the CIP Reliability Standards. In Order No. 706, the Commission approved NERC's staggered implementation schedule for the CIP Reliability Standards. Table 3 of NERC's Implementation Plan for Cyber Security Standards CIP–002–1 through CIP–009–1 defines the implementation schedule for Responsible Entities that were required to register during 2006. Under Table 3, Responsible Entities must be Auditably Compliant with CIP–002–1 through CIP–009–1 by December 31, 2010.[44]

57. NERC supports the application of Table 3 of the CIP Reliability Standards implementation plan to determine an appropriate compliance schedule.[45] In contrast, numerous nuclear industry commenters[46] argue that the Table 3 implementation schedule should not apply to nuclear power plants. Rather, many of the nuclear industry commenters suggest that the Commission should direct NERC to work with stakeholders to develop an appropriate timeframe for owners and operators of nuclear power plants to achieve full compliance with the CIP Reliability Standards.

58. NEI recommends a schedule similar to Table 4 of NERC's Implementation Plan for Cyber Security Standards, which pertains to compliance deadlines for newly registered entities. Exelon proposes a ''begin work'' date of December 31, 2008, with an auditable compliance deadline of December 31, 2011.

Commission Determination

59. The Commission finds that it is not appropriate to dictate the schedule contained in Table 3 of NERC's Implementation Plan, *i.e.*, a December 2010 deadline for auditable compliance, for nuclear power plants to comply with the CIP Reliability Standards. Instead of requiring nuclear power plants to implement the CIP Reliability Standards on a fixed schedule at this time, we agree to allow more flexibility.

60. Rather than the Commission setting an implementation schedule, we agree with commenters that the ERO should develop an appropriate schedule after providing for stakeholder input. Accordingly, we direct the ERO to engage in a stakeholder process to develop a more appropriate timeframe for nuclear power plants' full compliance with CIP Reliability Standards. Further, we direct NERC to submit, within 180 days of the date of issuance of this order, a compliance filing that sets forth a proposed implementation schedule.

The Commission orders:

(A) The CIP Reliability Standards are clarified, as discussed in the body of this order.

(B) The ERO is hereby directed to establish a stakeholder process to determine the appropriate implementation timetable for nuclear power plants, and submit a compliance filing to the Commission within 180 days of the date of issuance of this order, as discussed in the body of this order.

By the Commission.

Kimberly D. Bose,

Secretary.

Appendix—Commenters

AEP—American Electric Power Service Corporation.
Arizona Public Service—Arizona Public Service Company.
Detroit Edison—Detroit Edison Company.
Dominion—Dominion Resources, Inc.
Duke—Duke Energy Corporation.
EEI—Edison Electric Institute.
Entergy—Entergy Services, Inc.
Exelon—Exelon Corporation.
FirstEnergy—FirstEnergy Service Company.
IESO/Hydro One—Independent Electricity System Operator of Ontario (IESO) and Hydro One Networks, Inc.
Kansas City—Kansas City Power & Light Company.
Luminant—Luminant Generation Company LLC.
NERC—North American Electric Reliability Corporation.
NEI—Nuclear Energy Institute.
Ontario Power—Ontario Power Generation, Inc.
PG&E—Pacific Gas & Electric.
PPL Companies—PPL Companies (PPL Electric Utilities Corporation, PPL Susquehanna, LLC, and PPL EnergyPlus, LLC).
Progress Energy—Progress Energy, Inc.
PSEG Companies—PSEG Companies (Public Service Electric and Gas Company, PSEG

[44] Proposed Clarification, 124 FERC ¶ 61,247 at P 9.

[45] Order No. 706, *Mandatory Reliability Standards for Critical Infrastructure Protection,* 122 FERC ¶ 61,040, at P 77–90 (2008).

[46] *E.g.,* Ameren, Dominion, Duke, EEI, Exelon, FirstEnergy, IESO/Hydro One, Ontario Power, PG&E, PPL, PSEG, Southern and Wolf Creek.

Energy Resources and Trade LLC, and PSEG Power LLC).
Southern—Southern Nuclear Operating Company.
Union Electric/Ameren—Union Electric Company and Ameren Services Company.
NRC Staff—U.S. Nuclear Regulatory Commission Staff.
Wolf Creek—Wolf Creek Nuclear Operating Corporation.

[FR Doc. E9–6503 Filed 3–24–09; 8:45 am]

BILLING CODE 6717–01–P

DEPARTMENT OF THE TREASURY

Internal Revenue Service

26 CFR Part 1

[TD 9447]

RIN 1545–BG80

Automatic Contribution Arrangements

Correction

In rule document E9–3716 beginning on page 8200 in the issue of Tuesday, February 24, 2009, make the following correction:

§1.401(m)–2 [Corrected]

On page 8211, in §1.401(m)–2, in the first column, in paragraph (b)(2)(iv)(D), in the sixth line, ''April 1, 2007 edition'' should read ''April 1, 2007, edition''.

[FR Doc. Z9–3716 Filed 3–24–09; 8:45 am]

BILLING CODE 1505–01–D

DEPARTMENT OF HOMELAND SECURITY

Coast Guard

33 CFR Part 117

[Docket No. USCG–2008–1095]

RIN 1625–AA09

Drawbridge Operation Regulation; Chehalis, Hoquiam, and Wishkah Rivers, Aberdeen and Hoquiam, WA, Schedule Change

AGENCY: Coast Guard, DHS.

ACTION: Final rule.

SUMMARY: The Coast Guard is changing the drawbridge operation regulation for the Washington State drawbridges across the Chehalis, Hoquiam, and Wishkah Rivers at Grays Harbor, Washington. The change reduces staffing requirements during the night when openings are infrequent. The rule does this by modifying the number of hours of advance notice required for draw openings and establishing the telephone as the only means of initial contact for openings at night.

DATES: This rule is effective April 24, 2009.

ADDRESSES: Comments and related materials received from the public, as well as documents mentioned in this preamble as being available in the docket, are part of docket USCG–2008–1095 and are available online at *http://www.regulations.gov.* This material is also available for inspection or copying at two locations: The Docket Management Facility (M–30), U.S. Department of Transportation, West Building Ground Floor, Room W12–140, 1200 New Jersey Avenue, SE., Washington, DC 20590, between 9 a.m. and 5 p.m., Monday through Friday, except Federal holidays and Commander (dpw), Thirteenth Coast Guard District, 915 Second Avenue, Room 3510, Seattle, WA 98174–1067, between 8 a.m. and 4 p.m., Monday through Friday, except Federal holidays.

FOR FURTHER INFORMATION CONTACT: If you have questions on this rule, call Austin Pratt, Chief, Bridge Section, Waterways Management Branch, Thirteenth Coast Guard District, telephone 206–220–7282. If you have questions on viewing the docket, call Renee V. Wright, Program Manager, Docket Operations, telephone 202–366–9826.

SUPPLEMENTARY INFORMATION:

Regulatory Information

On November 26, 2008, we published a notice of proposed rulemaking (NPRM) entitled Drawbridge Operation Regulation; Chehalis, Hoquiam, and Wishkah Rivers, Aberdeen and Hoquiam, WA, Schedule Change in the **Federal Register** (73 FR 229). Two responses were received from the public. No public hearing was requested, and none was held.

Background and Purpose

This rule enables the Washington State Department of Transportation, the owner of the drawbridges across the Chehalis, Hoquiam, and Wishkah Rivers at Grays Harbor, Washington, to reduce the staffing of the Chehalis Bridge, which currently maintains a radio watch during the night hours when advance notice is required for openings of the draws of all of those bridges.

One-hour notice is currently required for openings of the Chehalis River Bridge from one hour after sunset to one hour before sunrise and for all openings of the Simpson Avenue Bridge, Hoquiam River mile 0.5, the Riverside Avenue Bridge, Hoquiam River mile 0.9, the Heron Street Bridge, Wishkah River mile 0.2, and the Wishkah Street Bridge, Wishkah River, mile 0.4.

The reduction in staffing is appropriate because the draws of those bridges rarely have to been opened during the period affected. In fact, during the entire year of 2007 only 50 openings were requested for the bridges between 9 p.m. and 5 a.m., which equates to an average of less than one opening per week during those hours. Furthermore, most of the requests were made by telephone. Whenever operators are at the Chehalis River Bridge a normal radio watch will be maintained.

Discussion of Comments and Changes

Two comments were received from parties affected by this rule. Both comments appeared to misunderstand some of the provisions of the rule. Specifically, the rule requires notice of one hour rather than four hours as one commenter believed. Another commenter appeared to believe that a radio watch would never be maintained under the rule, but the rule provides for a normal radio watch to be maintained whenever operators are present. The commenters' objections were resolved as noted and no changes were made to the rule based on the comments received.

Regulatory Analyses

We developed this rule after considering numerous statutes and executive orders related to rulemaking. Below we summarize our analyses based on 13 of these statutes or executive orders.

Regulatory Planning and Review

This rule is not a ''significant regulatory action'' under section 3(f) of Executive Order 12866, Regulatory Planning and Review, and does not require an assessment of potential costs and benefits under section 6(a)(3) of that Order. The Office of Management and Budget has not reviewed it under that Order.

We expect the economic impact of this rule to be so minimal that a full Regulatory Evaluation is unnecessary. We reached this conclusion because the draws of the bridges rarely have to been opened during the period affected, the draws will still be opened in a reasonable amount of time, and most vessel operators already use the telephone to request openings of the draws.

Small Entities

Under the Regulatory Flexibility Act (5 U.S.C. 601–612), we have considered whether this rule would have a significant economic impact on a

substantial number of small entities. The term ''small entities'' comprises small businesses, not-for-profit organizations that are independently owned and operated and are not dominant in their fields, and governmental jurisdictions with populations of less than 50,000.

The Coast Guard certifies under 5 U.S.C. 605(b) that this rule would not have a significant economic impact on a substantial number of small entities. This rule would affect the following entities, some of which might be small entities: The owners or operators of vessels needing to transit the bridges during the period affected. This action will not have a significant economic impact on a substantial number of small entities, however, because the bridges rarely have to been opened during the period affected, the draws will still be opened in a reasonable amount of time, and most vessel operators already use the telephone to request openings of the draws.

Assistance for Small Entities

Under section 213(a) of the Small Business Regulatory Enforcement Fairness Act of 1996 (Pub. L. 104–121), we want to assist small entities in understanding this rule so that they can better evaluate its effects on them and participate in the rulemaking process.

Collection of Information

This rule would call for no new collection of information under the Paperwork Reduction Act of 1995 (44 U.S.C. 3501–3520).

Federalism

A rule has implications for federalism under Executive Order 13132, Federalism, if it has a substantial direct effect on State or local governments and would either preempt State law or impose a substantial direct cost of compliance on them. We have analyzed this rule under that Order and have determined that it does not have implications for federalism.

Unfunded Mandates Reform Act

The Unfunded Mandates Reform Act of 1995 (2 U.S.C. 1531–1538) requires Federal agencies to assess the effects of their discretionary regulatory actions. In particular, the Act addresses actions that may result in the expenditure by a State, local, or tribal government, in the aggregate, or by the private sector of $100,000,000 or more in any one year. Though this rule will not result in such an expenditure, we do discuss the effects of this rule elsewhere in this preamble.

Taking of Private Property

This rule would not affect a taking of private property or otherwise have taking implications under Executive Order 12630, Governmental Actions and Interference with Constitutionally Protected Property Rights.

Civil Justice Reform

This rule meets applicable standards in sections 3(a) and 3(b)(2) of Executive Order 12988, Civil Justice Reform, to minimize litigation, eliminate ambiguity, and reduce burden.

Protection of Children

We have analyzed this rule under Executive Order 13045, Protection of Children from Environmental Health Risks and Safety Risks. This rule is not an economically significant rule and would not create an environmental risk to health or risk to safety that might disproportionately affect children.

Indian Tribal Governments

This rule does not have tribal implications under Executive Order 13175, Consultation and Coordination with Indian Tribal Governments, because it would not have a substantial direct effect on one or more Indian tribes, on the relationship between the Federal Government and Indian tribes, or on the distribution of power and responsibilities between the Federal Government and Indian tribes.

Energy Effects

We have analyzed this rule under Executive Order 13211, Actions Concerning Regulations That Significantly Affect Energy Supply, Distribution, or Use. We have determined that it is not a ''significant energy action'' under that order because it is not a ''significant regulatory action'' under Executive Order 12866 and is not likely to have a significant adverse effect on the supply, distribution, or use of energy. The Administrator of Information and Regulatory Affairs has not designated this as a significant energy action. Therefore, it does not require a Statement of Energy Effects under Executive Order 13211.

Technical Standards

The National Technology Transfer and Advancement Act (NTTAA) (15 U.S.C. 272 note) directs agencies to use voluntary consensus standards in their regulatory activities unless the agency provides Congress, through the Office of Management and Budget, with an explanation of why using these standards would be inconsistent with applicable law or otherwise impractical. Voluntary consensus standards are technical standards (e.g., specifications of materials, performance, design, or operation; test methods; sampling procedures; and related management systems practices) that are developed or adopted by voluntary consensus standards bodies.

This rule does not use technical standards. Therefore, we did not consider the use of voluntary consensus standards.

Environment

We have analyzed this proposed rule under Department of Homeland Security Management Directive 0023.1 and Commandant Instruction M16475.lD which guides the Coast Guard in complying with the National Environmental Policy Act of 1969 (NEPA)(42 U.S.C. 4321–4370f), and have made a preliminary determination that this is one of a category of actions which, individually or cumulatively, is not likely to have a significant effect on the human environment because it simply promulgates the operating regulations or procedures for drawbridges. We seek any comments or information that may lead to the discovery of a significant environmental impact from this proposed rule.

List of Subjects in 33 CFR Part 117

Bridges.

■ For the reasons discussed in the preamble, the Coast Guard amends 33 CFR part 117 as follows:

PART 117—DRAWBRIDGE OPERATION REGULATIONS

■ 1. The authority citation for part 117 continues to read as follows:

Authority: 33 U.S.C. 499; 33 CFR 1.05–1; Department of Homeland Security Delegation No. 0170.1.

■ 2. Revise § 117.1031 to read as follows:

§ 117.1031 Chehalis River.

The draw of the SR 101 highway bridge, mile 0.1, at Aberdeen shall open on signal from 5 a.m. to 9 p.m., except that from 7:15 a.m. to 8:15 a.m. and 4:15 p.m. to 5:15 p.m., Monday through Friday, except Federal holidays, the draw need not open for vessels of less than 5000 gross tons. At all other times, the draw shall open on signal if at least one hour notice is given by telephone to the Washington State Department of Transportation. The opening signal is one prolonged blast followed by one short blast.

■ 3. In § 117.1047 revise paragraphs (c) and (d) to read as follows:

§ 117.1047 Hoquiam River.

* * * * *

(c) The draw of the Simpson Avenue Bridge, mile 0.5, at Hoquiam, shall open on signal if at least one hour notice is given by telephone to the Washington State Department of Transportation. The opening signal is two prolonged blasts followed by one short blast.

(d) The draw of the Riverside Avenue Bridge, mile 0.9, at Hoquiam, shall open on signal if at least one hour notice is given by telephone to the Washington State Department of Transportation. The opening signal is two prolonged blasts followed by two short blasts.

■ 4. In § 117.1065 revise paragraph (c) to read as follows:

§ 117.1065 Wishkah River.

* * * * *

(c) The draws of the Heron Street Bridge, mile 0.2 and the Wishkah Street Bridge, mile 0.4, at Aberdeen, shall open on signal if at least one hour notice is given by telephone to the Washington State Department of Transportation. The opening signal for both bridges is one prolonged blast followed by two short blasts.

Dated: March 9, 2009.

J. P. Currier,

Rear Admiral, U.S. Coast Guard, Commander, Thirteenth Coast Guard District.

[FR Doc. E9–6627 Filed 3–24–09; 8:45 am]

BILLING CODE 4910–15–P

DEPARTMENT OF HOMELAND SECURITY

Coast Guard

33 CFR Part 117

[Docket No. USCG–2009–0156]

RIN 1625–AA09

Drawbridge Operation Regulation; Upper Mississippi River, Rock Island, IL

AGENCY: Coast Guard, DHS.

ACTION: Notice of temporary deviation from regulations.

SUMMARY: The Commander, Eighth Coast Guard District has issued a temporary deviation from the regulation governing the operations of the Rock Island Railroad and Highway Drawbridge, Mile 482.9, Rock Island, Illinois across the Upper Mississippi River. This deviation allows the bridge to remain in the closed to navigation position from 7:30 a.m. until 11:30 a.m., September 27, 2009. The deviation is necessary as the drawbridge is part of the annual route for the Quad City Marathon.

DATES: This temporary deviation is effective from 7:30 a.m. until 11:30 a.m., September 27, 2009.

Documents indicated in this preamble as being available in the docket are part of docket USCG–2009–0157 and are available online at *http://www.regulations.gov.* They are also available for inspection or copying at two locations: the Docket Management Facility (M–30), U.S. Department of Transportation, West Building Ground Floor, Room W12–140, 1200 New Jersey Avenue, SE., Washington, DC 20590, between 9 a.m. and 5 p.m., Monday through Friday, except Federal holidays, and Commander, Eighth Coast Guard District, Room 2.107F in the Robert A. Young Federal Building, 1222 Spruce Street, St. Louis, MO 63103–2832, between 8 a.m. and 4 p.m., Monday through Friday, except Federal holidays.

FOR FURTHER INFORMATION CONTACT: Roger K. Wiebusch, Bridge Administrator, (314) 269–2378.

SUPPLEMENTARY INFORMATION: The U.S. Army Rock Island Arsenal requested a temporary deviation for the Rock Island Railroad and Highway Drawbridge, mile 482.9, at Rock Island, Illinois across the Upper Mississippi to remain in the closed to navigation position as the drawbridge is part of the Annual Quad City Marathon route. The Rock Island Railroad and Highway Drawbridge currently operates in accordance with 33 CFR 117.5, which states the general requirement that drawbridges shall open promptly and fully for the passage of vessels when a request to open is given in accordance with the subpart. In order to facilitate the annual event, the drawbridge must be kept in the closed-to-navigation position. This deviation allows the bridge to remain in the closed-to-navigation position for four hours from 7:30 a.m. until 11:30 a.m., September 27, 2009.

There are no alternate routes for vessels transiting this section of the Upper Mississippi River.

The Rock Island Railroad and Highway Drawbridge, in the closed-to-navigation position, provides a vertical clearance of 23.8 feet above normal pool. Navigation on the waterway consists primarily of commercial tows and recreational watercraft. This temporary deviation has been coordinated with waterway users. No objections were received.

In accordance with 33 CFR 117.35(e), the drawbridge shall return to its regular operating schedule immediately at the end of the designated time period. This deviation from the operating regulations is authorized under 33 CFR 117.35.

Dated: March 10, 2009.

Roger K. Wiebusch,

Bridge Administrator.

[FR Doc. E9–6666 Filed 3–24–09; 8:45 am]

BILLING CODE 4910–15–P

DEPARTMENT OF HOMELAND SECURITY

Coast Guard

33 CFR Part 117

[Docket No. USCG–2009–0157]

RIN 1625–AA09

Drawbridge Operation Regulation; Upper Mississippi River, Rock Island, IL

AGENCY: Coast Guard, DHS.

ACTION: Notice of deviation from drawbridge regulation.

SUMMARY: The Commander, Eighth Coast Guard District has issued a temporary deviation from the regulation governing the operations of the Rock Island Railroad and Highway Drawbridge, Mile 482.9, Rock Island, Illinois across the Upper Mississippi River. This deviation allows the bridge to remain in the closed to navigation position from 8:30 a.m. until 10:30 a.m., May 16, 2009. The deviation is necessary as the drawbridge is part of the annual route for the Quad Cities Heart Walk.

DATES: This temporary deviation is effective from 8:30 a.m. until 10:30 a.m., May 16, 2009.

ADDRESSES: Documents indicated in this preamble as being available in the docket are part of docket USCG–2009–0157 and are available online at *http://www.regulations.gov.* They are also available for inspection or copying at two locations: the Docket Management Facility (M–30), U.S. Department of Transportation, West Building Ground Floor, Room W12–140, 1200 New Jersey Avenue SE., Washington, DC 20590, between 9 a.m. and 5 p.m., Monday through Friday, except Federal holidays, and Commander, Eighth Coast Guard District, Room 2.107F in the Robert A. Young Federal Building, 1222 Spruce Street, St. Louis, MO 63103–2832, between 8 a.m. and 4 p.m., Monday through Friday, except Federal holidays.

FOR FURTHER INFORMATION CONTACT: Roger K. Wiebusch, Bridge Administrator, (314) 269–2378.

SUPPLEMENTARY INFORMATION: The U.S. Army Rock Island Arsenal requested a

temporary deviation for the Rock Island Railroad and Highway Drawbridge, mile 482.9, at Rock Island, Illinois across the Upper Mississippi to remain in the closed to navigation position as the drawbridge is part of the Annual Quad Cities Heart Walk. The Rock Island Railroad and Highway Drawbridge currently operates in accordance with 33 CFR 117.5, which states the general requirement that drawbridges shall open promptly and fully for the passage of vessels when a request to open is given in accordance with the subpart. In order to facilitate the annual event, the drawbridge must be kept in the closed-to-navigation position. This deviation allows the bridge to remain in the closed-to-navigation position for two and one half hours from 8:30 a.m. until 10:30 a.m., May 16, 2009.

There are no alternate routes for vessels transiting this section of the Upper Mississippi River.

The Rock Island Railroad and Highway Drawbridge, in the closed-to-navigation position, provides a vertical clearance of 23.8 feet above normal pool. Navigation on the waterway consists primarily of commercial tows and recreational watercraft. This temporary deviation has been coordinated with waterway users. No objections were received.

In accordance with 33 CFR 117.35(e), the drawbridge shall return to its regular operating schedule immediately at the end of the designated time period. This deviation from the operating regulations is authorized under 33 CFR 117.35.

Dated: March 10, 2009.

Roger K. Wiebusch,

Bridge Administrator.

[FR Doc. E9–6686 Filed 3–24–09; 8:45 am]

BILLING CODE 4910–15–P

LIBRARY OF CONGRESS

Copyright Office

37 CFR Part 201

[Docket No. RM 2008–1]

Recordation of Notices of Termination of Transfers and Licenses; Clarifications

AGENCY: Copyright Office, Library of Congress.

ACTION: Final rule.

SUMMARY: The Copyright Office is adopting amendments to its regulations governing the recordation of notices of termination and certain related provisions.

DATES: *EFFECTIVE DATE:* March 25, 2009.

FOR FURTHER INFORMATION CONTACT: Maria Pallante, Associate Register for Policy and International Affairs, Copyright GC/I&R, P.O. Box 70400, Washington, DC 20024–0400. Telephone (202) 707–8380. Fax (202) 707–8366.

SUPPLEMENTARY INFORMATION: The Office published a Notice of Proposed Rulemaking in the Federal Register on January 23, 2008 (73 FR 3898), seeking public comment on five proposed amendments to its regulations at § § 201.1, 201.3, 201.4 and 201.10 of Chapter 37. These were: 1) an amendment communicating the Office's practices as to its receipt of notices of termination that are untimely; 2) an amendment clarifying that recordation of a notice of termination by the Office does not necessarily mean that the document is legally sufficient; 3) an amendment updating the legibility requirements for all recorded documents, including notices of termination; 4) an amendment making minor explanatory edits to the fee schedule for multiple titles within a document (adding ''*e.g.* a Notice of Termination'' as an example); and 5) an amendment establishing a new mailing address to which notices of termination should be sent. (For ease of explanation only, the amendments are herein referred to as amendments one through five.)

The Office received two comments, each on February 22, 2008, from Law Professor Daniel N. Ballard, University of the Pacific McGeorge School of Law, and from Terrie Bjorkland on behalf of the American Federation of Television and Radio Artists (AFTRA). Both commentators questioned the basis for, and the likely impact of, amendment number two. Mr. Ballard first suggested that there is no justification for the proposed language, and second suggested that rather than being neutral on its face, the language, as worded, might create ''an improper bias *against* the termination of copyright interests.'' Ms. Bjorkland observed that the proposal emphasizes the inconclusive impact of the filing of a notice, doing ''little to give artists a sense of comfort that the Copyright Office is facilitating the protection of their right of termination.'' In addition, she expressed opposition to amendment number one, questioning why the Office should make a determination that a notice is untimely, when ''it is incumbent upon the challenging party to contest the validity of the notice, if appropriate.'' After considering these comments, the Office is adopting all of the aforementioned amendments, but in doing so is rephrasing amendment number two.

Background

The Copyright Office is an office of public record which receives and records documents that pertain to copyright, including, specifically, notices of termination. Notices of termination may be served by authors (and certain heirs, beneficiaries or representatives of authors who are specified by statute) to extinguish the exclusive or nonexclusive grants of transfers or licenses of copyright or the divisible rights thereunder. The provisions have an equitable function: they exist to allow authors or their heirs a second opportunity to share in the economic success of their works.

The termination provisions are set forth in three sections of the law: Sections 304(c), 304(d) and 203 of the 1976 Copyright Act, Title 17 of the United States Code. The sections are similar, though not identical, and they govern distinct categories of works. (None of the sections applies to copyrights in works made for hire or grants made by will.)

Section 304(c) governs any work in which the copyright was subsisting in its first or renewal term as of January 1, 1978, and provides for termination of the exclusive or nonexclusive grant of a transfer or license of the renewal copyright (or any right under it) executed before January 1, 1978. Termination may be exercised at any time during a five year period beginning at the end of fifty–six years from the date copyright was originally secured.

Section 304(d) provides a termination right for a subset of works for which the termination right under section 304(c) expired (and was not exercised) on or before the effective date (October 27, 1998) of the ''Sonny Bono Copyright Term Extension Act,'' which extended the copyright term by 20 years. It provides for termination of the exclusive or nonexclusive grant of a transfer or license of the renewal copyright (or any right under it) at any time during a five year period beginning at the end of 75 years from the date copyright was originally secured.

Section 203 is limited to grants executed by the author. It provides for termination of the exclusive or nonexclusive grant of copyright (or any right under copyright) executed on or after January 1, 1978 (regardless of whether the copyright was secured prior to 1978). Termination may be exercised at any time during a period of five years beginning at the end of thirty–five years

from the date of publication of the work under the grant or at the end of forty years from the date of execution of the grant, whichever is earlier.

By all accounts, the termination provisions are dense and formalistic, particularly for a non–lawyer. In summary, the author (or if the author is deceased, the party specified by statute) must serve the notice of termination in writing on a grantee or the grantee's successor–in–title not less than two or more than ten years before the effective date, in a form and manner prescribed by regulation.[1]

A copy of the notice of termination must be recorded with the Copyright Office *before the effective date of termination*. 17 U.S.C. 304(c)(4)(A); 304(d)(1); 203(a)(4)(A). (Emphasis added.) The particulars of the recordation process are prescribed by regulation. In short, the copy must be legible and must include the following elements: 1) either actual signatures or reproductions of signatures 2) a statement setting forth the date the notice was served 3) an indication of the manner of service and 4) submission of the appropriate filing fee. 37 CFR 201.4(c)(3); 37 CFR 201.10(f).

A discussion of the amendments follows.

DISCUSSION OF PROPOSED AMENDMENTS

Timeliness of Notices of Termination

The Copyright Office cannot accept a notice of termination that is untimely because, under the law, lateness is a fatal mistake. (By contrast, see 37 CFR 201.10(e) for examples of forgivable, harmless errors.) Thus, before the Copyright Office records a notice, it reviews for timeliness. Specifically, it confirms that the notice has been served within the relevant statutory time frame (as derived from the facts stated in the notice), and has been received by the Office prior to the stated effective date of termination.

In practice, if in the judgment of the Office the document is untimely, the Office will take one of two actions. If the notice is premature, the Office will return it with an explanation, so that the serving party may resubmit the notice to the Office at a later date (and, as necessary, resubmit the notice to the party being served). On the other hand, if the document is tardy, the Office will offer only to record and index the document according to its general recordation practices, as a ''document pertaining to copyright.'' 17 U.S.C. 205(a); 37 CFR 201.4(a)(2). It will not accept the document as a ''notice of termination,'' meaning that it will not be specially indexed as such. Whether such general recordation by the Copyright Office will be sufficient in any particular instance to effect termination as a matter of law is an issue that only the courts may resolve.

Notwithstanding the objection expressed by AFTRA with respect to amendment one, the Office's practice is consistent with the statute. Moreover, since the amendment restates the longstanding practice of the Office (*i.e.* it does not introduce a new practice), the Office maintains that the amendment is merely educative, and may prove helpful to interested parties who are looking for guidance.

Recordation as Distinguished from Legal Sufficiency

Under amendment two, the Office states a truism: the fact that the Office has accepted a document and recorded it as a notice of termination does not mean, necessarily, that the notice is sufficient to effect termination under the law. As proposed in the Notice of Proposed Rulemaking, the following sentence would have been introduced at the top of the paragraph: ''The mere fact that a notice of termination has been recorded does not mean that it is legally sufficient.'' The remainder of the paragraph would have followed and remained unchanged: ''Recordation of a notice of termination by the Copyright Office is without prejudice to any party claiming that the legal and formal requirements for issuing a valid notice have not been met.''

On this issue, the Office does not find the stated concerns of the commentators to be entirely plausible. Recordation is a required act under the law but, once completed, it carries no legal presumption that termination has been properly effected. If authors or their representatives believe otherwise, it is all the more important that this fact be clearly and accurately stated. The reality is that the Office, aside from its review for timeliness (discussed above), does not confirm the validity of the alleged facts that are reported in each notice. To do so would be an impossible exercise. This means that the Office may accept and record a notice of termination even though any number of elements may ultimately prove to be wrongly stated and invalid under the law, from the named authors, to the designation of beneficiaries, to the date or characterization of the grant. In instances where termination has not been perfected in the first place, recordation of the notice is of no consequence. The proposed amendment would not have changed this result —– only confirmed it for clarity's sake.

Nevertheless, the Office is not wedded to the particular formulation of the point as originally proposed. In his comments, Mr. Ballard objected, in particular, to use of the phrase ''mere fact,'' which he saw as ''loaded language'' that would, in practice, undermine the termination process by favoring grantees over authors. In response, the Office has removed ''mere fact'' and constructed a new formulation, which in part repeats the operative language of the statute. It reads as follows: ''A copy of the notice of termination shall be recorded in the Copyright Office before the effective date of termination, as a condition to its taking effect. However, the fact that the Office has recorded the notice does not mean that it is otherwise sufficient under the law.'' The existing sentence will follow: ''Recordation of a notice of termination by the Copyright Office is without prejudice to any party claiming that the legal and formal requirements for issuing a valid notice have not been met.''

Legibility of Notices of Termination and Other Documents Pertaining to Copyright

Amendment three is relatively minor, but nonetheless underscores the mission of the Copyright Office as an office of public record. It updates the legibility requirement by replacing the reference to ''microform copies'' with a broader, more flexible reference to technology. As revised, a document must be ''legible and *capable of being imaged or otherwise reproduced in legible copies by the technology employed by the Office at the time of submission.''* (Emphasis added.) The Office received no objections to this revision.

Fee Requirements for Notices of Termination

With respect to fees, it is the Copyright Office' experience that parties who submit notices of termination for recordation sometimes miscalculate the amount due, especially where grants of rights in multiple works are being

[1] If the author executed the grant but is no longer living, the termination interest is owned and may be exercised by the author's widow or widower and any children or grandchildren on a *per stirpes* basis (subject to certain conditions concerning the disposition of partial interests of multiple authors and heirs), or if the aforementioned are deceased, by the author' executor, administrator, personal representative, or trustee. 17 U.S.C. 203(a)(1)–(2); 17 U.S.C. 304 (c)(1)–(2); 17 U.S.C. 304(d)(1). Moreover, under Sections 304(c) and 304 (d), if the author is no longer living and the grant has been executed by one or more persons designated by statute, termination may be exercised by the surviving person or persons who executed it. 17 U.S.C. 304(c); 17U.S.C. 304(d); 17 U.S.C. 304(a)(1)(c). Note that this is not true of Section 203, which applies only to grants executed by authors. 17 U.S.C. 203(a).

terminated by virtue of one document. Amendment four adds the notice of termination as an express example in the schedule of fees under section 201.3(c)(16), specifying that the basic fee for recordation of a notice of termination containing a single title is $95, and the fee for recordation of a notice of termination containing more than one title is an additional $25 per group of 10 titles. The Office received no objections to this revision.

Mailing Address for Notices of Termination

Finally, because notices of termination are time–sensitive, a delay in processing may have serious consequences. Amendment five officially activates the special post office box at the Copyright Office, from which notices of termination can more easily be sorted and routed for recordation. This revision also deletes the address for the now–defunct Copyright Arbitration Royalty Panel (CARP). *See* 72 FR 45071 (August 10, 2007). The Office received no objections to this revision.

List of Subjects in 37 CFR Part 201

Copyright.

Final Regulations

For the reasons set forth above, the Copyright Office amends part 201 of title 37 of the Code of Federal Regulations as follows:

PART 201 – GENERAL PROVISIONS

■ 1.The authority citation for part 201 continues to read as follows:

Authority: 17 U.S.C. 702.

■ 2.Section 201.1 is amended by revising paragraph (b)(2) to read as follows:

§ 201.1 Communication with the Copyright Office.

* * * * *

(b)* * *

(2)*Notices of Termination.* Notices of termination submitted for recordation should be mailed to Copyright Office, Notices of Termination, P.O. Box 71537, Washington, DC 20024–1537.

§ 201.3 [Amended]

■ 3.Amend § 201.3(c)(16) by removing the phrase, ''Recordation of document, including a Notice of Intent to Enforce (NIE) (single title),'' and adding in its place the phrase ''Recordation of document (single title), *e.g.* a Notice of Termination or a Notice of Intent to Enforce (NIE)''.

■ 4.Amend § 201.4 by revising paragraph (c)(3) to read as follows:

§ 201.4 Recordation of transfers and certain other documents.

* * * * *

(c)* * *

(3)To be recordable, the document must be legible and capable of being imaged or otherwise reproduced in legible copies by the technology employed by the Office at the time of submission.

* * * * *

■ 5.

follows:

a. By adding paragraph (f)(1)(iii);

b. By redesignating paragraph (f)(4) as (f)(5);

c. By adding a new paragraph (f)(4);

d. By revising redesignated paragraph (f)(5); and

e. By adding paragraph (f) (6).

The revisions and additions to § 201.10 read as follows:

§ 201.10 Notices of termination of transfers and licenses.

* * * * *

(f)* * *

(1)* * *

(iii)The copy submitted for recordation must be legible per the requirements of § 201.4(c)(3).

* * * * *

(4)Notwithstanding anything to the contrary in this section, the Copyright Office reserves the right to refuse recordation of a notice of termination if, in the judgment of the Copyright Office, such notice of termination is untimely. If a document is submitted as a notice of termination after the statutory deadline has expired, the Office will offer to record the document as a ''document pertaining to copyright'' pursuant to § 201.4(c)(3), but the Office will not index the document as a notice of termination. Whether a document so recorded is sufficient in any instance to effect termination as a matter of law shall be determined by a court of competent jurisdiction.

(5)A copy of the notice of termination shall be recorded in the Copyright Office before the effective date of termination, as a condition to its taking effect. However, the fact that the Office has recorded the notice does not mean that it is otherwise sufficient under the law. Recordation of a notice of termination by the Copyright Office is without prejudice to any party claiming that the legal and formal requirements for issuing a valid notice have not been met.

(6)Notices of termination should be submitted to the address specified in § 201.1(b)(2).

Dated: March 16, 2009

Marybeth Peters,

Register of Copyrights.

Approved by:

James H. Billington,

The Librarian of Congress.

[FR Doc. E9–6649 Filed 3–24–09; 8:45 am]

BILLING CODE 1410–30–S

ENVIRONMENTAL PROTECTION AGENCY

40 CFR Part 52

[EPA–R03–OAR–2009–0058; FRL–8780–2]

Approval and Promulgation of Air Quality Implementation Plan; Maryland; Reasonably Available Control Technology Requirements for Volatile Organic Compounds

AGENCY: Environmental Protection Agency (EPA).

ACTION: Direct final rule.

SUMMARY: EPA is taking final action to fully approve revisions to the Maryland State Implementation Plan (SIP). The revisions pertain to Maryland's major source volatile organic compound (VOC) reasonable available control technology (RACT) regulation. EPA is converting the conditional limited approval status of Maryland's VOC RACT regulations to a full approval because EPA has approved all of the case-by-case RACT determinations submitted by Maryland pursuant to the generic provisions of its VOC RACT regulation as well as all of the RACT requirements for categories of VOC sources submitted by Maryland in accordance with the requirements of the Clean Air Act (CAA).

DATES: This rule is effective on May 26, 2009 without further notice, unless EPA receives adverse written comment by April 24, 2009. If EPA receives such comments, it will publish a timely withdrawal of the direct final rule in the **Federal Register** and inform the public that the rule will not take effect.

ADDRESSES: Submit your comments, identified by Docket ID Number EPA–R03–OAR–2009–0058 by one of the following methods:

A. *http://www.regulations.gov.* Follow the on-line instructions for submitting comments.

B. E-mail: fernandez.cristina@epa.gov.

C. *Mail:* EPA–R03–OAR–2009–0058, Cristina Fernandez, Chief, Air Quality Planning Branch, Mail code 3AP21, U.S. Environmental Protection Agency, Region III, 1650 Arch Street, Philadelphia, Pennsylvania 19103.

D. *Hand Delivery:* At the previously-listed EPA Region III address. Such deliveries are only accepted during the Docket's normal hours of operation, and special arrangements should be made for deliveries of boxed information.

Instructions: Direct your comments to Docket ID No. EPA–R03–OAR–2009–0058. EPA's policy is that all comments received will be included in the public docket without change, and may be made available online at *http://www.regulations.gov,* including any personal information provided, unless the comment includes information claimed to be Confidential Business Information (CBI) or other information whose disclosure is restricted by statute. Do not submit information that you consider to be CBI or otherwise protected through *http://www.regulations.gov* or e-mail. The *http://www.regulations.gov* Web site is an ''anonymous access'' system, which means EPA will not know your identity or contact information unless you provide it in the body of your comment. If you send an e-mail comment directly to EPA without going through *http://www.regulations.gov,* your e-mail address will be automatically captured and included as part of the comment that is placed in the public docket and made available on the Internet. If you submit an electronic comment, EPA recommends that you include your name and other contact information in the body of your comment and with any disk or CD–ROM you submit. If EPA cannot read your comment due to technical difficulties and cannot contact you for clarification, EPA may not be able to consider your comment. Electronic files should avoid the use of special characters, any form of encryption, and be free of any defects or viruses.

Docket: All documents in the electronic docket are listed in the *http://www.regulations.gov* index. Although listed in the index, some information is not publicly available, i.e., CBI or other information whose disclosure is restricted by statute. Certain other material, such as copyrighted material, is not placed on the Internet and will be publicly available only in hard copy form. Publicly available docket materials are available either electronically in *http://www.regulations.gov* or in hard copy during normal business hours at the Air Protection Division, U.S. Environmental Protection Agency, Region III, 1650 Arch Street, Philadelphia, Pennsylvania 19103. Copies of the State submittal are available at Maryland Department of the Environment, 1800 Washington Boulevard, Suite 705, Baltimore, Maryland, 21230.

FOR FURTHER INFORMATION CONTACT: Jacqueline Lewis, (215) 814–2037, or by e-mail at *lewis.jacqueline@epa.gov.*

SUPPLEMENTARY INFORMATION:

I. Background

Under section 184 of the CAA, RACT as specified in sections 182(b)(2) and 182(f) applies throughout the ozone transport region (OTR). The entire State of Maryland is located within the OTR. Therefore, RACT is applicable statewide in Maryland. The major source size generally is determined by the classification of the area in which the source is located. However, for areas located in the OTR, the major source size for stationary sources of VOCs is 50 tons per year (tpy) unless the area's ozone classification prescribes a lower major source threshold. The VOC RACT regulations that apply to source categories of VOCs are generally those VOC RACT regulations adopted by a state based upon Control Technique Guideline (CTG) documents issued by EPA. The CTGs provide ''presumptive RACT emission limitations'' for categories of major VOC sources. Major sources of VOC that are subject to RACT, but that are not covered by a regulation adopted by a state pursuant to a CTG are referred to as non-CTG VOC RACT sources. The State of Maryland was required to adopt and submit as SIP revisions VOC RACT regulations for the CTG documents issued between November 15, 1990 and the date of 1-hour ozone attainment, and the CTG documents issued prior to November 15, 1990. For major non-CTG VOC sources (not otherwise already subject to RACT pursuant to a source category regulation under the Maryland SIP), the State's VOC RACT regulations contain a ''generic'' RACT provision. A generic RACT regulation is one that does not, itself, specifically define RACT for a source or source categories, but instead allows for case-by-case RACT determinations. The generic provisions of Maryland's VOC RACT regulation allow for Maryland Department of the Environment (MDE) to make case-by-case RACT determinations that are then to be submitted to EPA for approval as revisions to the Maryland SIP. Lastly, the Maryland SIP includes RACT regulations submitted by Maryland and approved by EPA for categories of VOC sources not covered by a CTG.

On April 5, 1991, the State of Maryland formally submitted amendments to its air quality regulations to EPA as a SIP revision. Among the amendments submitted were revisions to Maryland Code of Regulations (COMAR) 26.11.06.06 for Maryland's minor VOC source requirements and the addition of COMAR 26.11.19.02G, which requires RACT for major sources of VOC that are not covered by Maryland's category specific VOC RACT regulations.

The April 5, 1991 submittal was amended on June 8, 1993 to establish statewide applicability for COMAR 26.11.19.02G and to lower the RACT applicability threshold for non-CTG sources of VOC in Maryland. The expanded geographic applicability of COMAR 26.11.06.06 did result in the regulation of VOC sources which were previously not regulated. However, the MDE made other specific amendments to COMAR 26.11.06.06, found at 26.11.06.06A which narrowed the applicability of COMAR 26.11.06.06B such that certain sources in Maryland's pre-enactment nonattainment areas that were previously subject to COMAR 26.11.06.06B were no longer covered by any enforceable emissions limit until such time as Maryland approved case-by-case VOC RACT requirements for them pursuant to the generic RACT provisions of COMAR 26.11.19.02G. This resulted in a temporary lapse of coverage for previously regulated non-CTG major VOC sources in the State of Maryland.

EPA proposed conditional approval of Maryland's April 5, 1991 and June 8, 1993 submittals pertaining to COMAR 26.11.19.02G and COMAR 26.11.06.06 on March 1, 1996 (61 FR 8009). On September 4, 1998, EPA withdrew the March 1, 1996 proposed conditional approval, and published a direct final rule (63 FR 47174) granting a conditional limited approval of the revisions to COMAR 26.11.19.02G and COMAR 26.11.06.06. In the September 4, 1998 direct final rule, EPA stated that the conditional nature of its approval would be satisfied once the MDE either (1) certifies that it has submitted case-by-case RACT proposals for all sources subject to the RACT requirements currently known to MDE; or (2) demonstrates that the emissions from any remaining subject sources represent a de minimus level of emissions as defined in the September 4, 1998 rulemaking. The MDE was to satisfy the terms of the conditional approval by a date certain no later than 12 months after the effective date of EPA's final conditional approval. EPA also stated that the limited approval status would be converted to full approval once EPA had approved all of the case-by-case RACT requirements submitted by MDE as SIP revisions.

On December 19, 2008, MDE submitted a letter to EPA, certifying that it had met the terms and conditions imposed by EPA in the September 4, 1998 (63 FR 47174) conditional limited approval. The MDE stated that it had fulfilled the terms and conditions of the conditional limited approval by submitting case-by-case VOC RACT facility determinations, category-specific VOC RACT and generic VOC RACT regulations for approval as SIP revisions.

EPA has reviewed the Maryland SIP and determined that MDE has submitted RACT regulations for the sources covered by the CTG documents issued between November 15, 1990 and the date of 1-hour ozone attainment, and the CTG documents issued prior to November 15, 1990; case-by-case RACT requirements for three facilities under its generic VOC RACT rule; and category-specific VOC RACT regulations for the remaining VOC sources located in the State of Maryland. EPA has approved all of these Maryland submissions as SIP revisions. (See 40 CFR Part 52.1070 for the list and **Federal Register** citations of all EPA-approved regulations and requirements of the Maryland SIP.) For these reasons EPA is converting the conditional limited approval status of COMAR 26.11.19.02G and COMAR 26.11.06.06 to a full approval.

Because EPA published its final rule granting conditional limited approval of COMAR 26.11.19.02G and COMAR 26.11.06.06 on September 4, 1998 (63 FR 47174) and that final rule had an effective date of November 3 1998, the letter submitted by MDE on December 19, 2008 satisfying the conditional nature EPA's approval should have been submitted by MDE no later than November 3, 1998. Under 110(k)(4) of the CAA, unless the State satisfies the terms of a conditional approval of a SIP submission within a date certain which may not exceed more than 12 months from the effective date of the conditional approval, EPA is to treat the conditional approval as a disapproval. Only recently has EPA realized that MDE did not submit the letter to EPA certifying that it had met the terms and conditions imposed by EPA in the September 4, 1998 (63 FR 47174) conditional limited approval rule within the specified 12-month time period from the November 3, 1998 effective date of that rule. EPA acknowledges its oversight for not treating the September 4, 1998 (63 FR 47174) conditional approval as a disapproval for Maryland's failure to satisfy the terms of the conditional approval within the one year period of time provided, and for not commencing the sanctions clocks such a disapproval would have engendered pursuant to Section 179 of the CAA. However, at this point in time, given that MDE has submitted and EPA has approved as SIP revisions VOC RACT requirements for all major sources of VOC in that State of Maryland as required by the CAA, there is no purpose served in treating the September 4, 1998 conditional as a disapproval. If EPA had treated its conditional approval as disapproval and had commenced the sanctions clocks or imposed sanctions, the remedy to halt the clocks or lift the sanctions would have been for Maryland to submit and for EPA to approve as SIP revisions RACT for all major VOC sources in Maryland. That remedy has been fulfilled.

II. Final Action

EPA is converting its conditional limited approval of revisions to COMAR 26.11.19.02G and COMAR 26.11.06.06 to a full approval because Maryland has satisfied the terms and conditions imposed in EPA's conditional limited approval published on September 4, 1998 (63 FR 47174) and because EPA has approved all of the case-by-case RACT determinations made by MDE under Maryland's generic VOC RACT rule. EPA has reviewed the Maryland SIP and determined that MDE has submitted RACT regulations for the sources covered by the CTG documents issued between November 15, 1990 and the date of 1-hour ozone attainment, and the CTG documents issued prior to November 15, 1990; case-by-case RACT requirements for three facilities under its generic VOC RACT rule; and category-specific VOC RACT regulations for the remaining VOC sources located in the State of Maryland. EPA has approved all of these Maryland submissions as SIP revisions in accordance with the requirements of section 110 the CAA.

EPA is publishing this rule without prior proposal because the Agency views this as a noncontroversial amendment and anticipates no adverse comment. However, in the ''Proposed Rules'' section of today's **Federal Register**, EPA is publishing a separate document that will serve as the proposal to approve the SIP revision if adverse comments are filed. This rule will be effective on May 26, 2009 without further notice unless EPA receives adverse comment by April 24, 2009. If EPA receives adverse comment, EPA will publish a timely withdrawal in the **Federal Register** informing the public that the rule will not take effect. EPA will address all public comments in a subsequent final rule based on the proposed rule. EPA will not institute a second comment period on this action. Any parties interested in commenting must do so at this time.

III. Statutory and Executive Order Reviews

A. General Requirements

Under the Clean Air Act, the Administrator is required to approve a SIP submission that complies with the provisions of the Act and applicable Federal regulations. 42 U.S.C. 7410(k); 40 CFR 52.02(a). Thus, in reviewing SIP submissions, EPA's role is to approve state choices, provided that they meet the criteria of the Clean Air Act. Accordingly, this action merely approves state law as meeting Federal requirements and does not impose additional requirements beyond those imposed by state law. For that reason, this action:

- Is not a ''significant regulatory action'' subject to review by the Office of Management and Budget under Executive Order 12866 (58 FR 51735, October 4, 1993);
- Does not impose an information collection burden under the provisions of the Paperwork Reduction Act (44 U.S.C. 3501 *et seq.*);
- Is certified as not having a significant economic impact on a substantial number of small entities under the Regulatory Flexibility Act (5 U.S.C. 601 *et seq.*);
- Does not contain any unfunded mandate or significantly or uniquely affect small governments, as described in the Unfunded Mandates Reform Act of 1995 (Pub. L. 104–4);
- Does not have Federalism implications as specified in Executive Order 13132 (64 FR 43255, August 10, 1999);
- Is not an economically significant regulatory action based on health or safety risks subject to Executive Order 13045 (62 FR 19885, April 23, 1997);
- Is not a significant regulatory action subject to Executive Order 13211 (66 FR 28355, May 22, 2001);
- Is not subject to requirements of Section 12(d) of the National Technology Transfer and Advancement Act of 1995 (15 U.S.C. 272 note) because application of those requirements would be inconsistent with the Clean Air Act; and
- Does not provide EPA with the discretionary authority to address, as appropriate, disproportionate human health or environmental effects, using practicable and legally permissible methods, under Executive Order 12898 (59 FR 7629, February 16, 1994).

In addition, this rule does not have tribal implications as specified by Executive Order 13175 (65 FR 67249, November 9, 2000), because the SIP is not approved to apply in Indian country located in the state, and EPA notes that it will not impose substantial direct costs on tribal governments or preempt tribal law.

B. Submission to Congress and the Comptroller General

The Congressional Review Act, 5 U.S.C. 801 *et seq.*, as added by the Small Business Regulatory Enforcement Fairness Act of 1996, generally provides that before a rule may take effect, the agency promulgating the rule must submit a rule report, which includes a copy of the rule, to each House of the Congress and to the Comptroller General of the United States. EPA will submit a report containing this action and other required information to the U.S. Senate, the U.S. House of Representatives, and the Comptroller General of the United States prior to publication of the rule in the **Federal Register**. A major rule cannot take effect until 60 days after it is published in the **Federal Register**. This action is not a ''major rule'' as defined by 5 U.S.C. 804(2).

C. Petitions for Judicial Review

Under section 307(b)(1) of the Clean Air Act, petitions for judicial review of this action must be filed in the United States Court of Appeals for the appropriate circuit by May 26, 2009. Filing a petition for reconsideration by the Administrator of this final rule does not affect the finality of this action for the purposes of judicial review nor does it extend the time within which a petition for judicial review may be filed, and shall not postpone the effectiveness of such rule or action. Parties with objections to this direct final rule are encouraged to file a comment in response to the parallel notice of proposed rulemaking for this action published in the proposed rules section of today's **Federal Register**, rather than file an immediate petition for judicial review of this direct final rule, so that EPA can withdraw this direct final rule and address the comment in the proposed rulemaking. This action converting the conditional limited approval to a full approval of revisions to COMAR 26.11.19.02G and COMAR 26.11.06.06 may not be challenged later in proceedings to enforce its requirements. (*See* section 307(b)(2).)

List of Subjects in 40 CFR Part 52

Environmental protection, Air pollution control, Incorporation by reference, Intergovernmental relations, Ozone, Volatile organic compounds.

February 24, 2009.

William T. Wisniewski,

Acting Regional Administrator, Region III.

■ 40 CFR part 52 is amended as follows:

PART 52—[AMENDED]

■ 1. The authority citation for part 52 continues to read as follows:

Authority: 42 U.S.C. 7401 *et seq.*

Subpart V—Maryland

■ 2. In § 52.1070, the table in paragraph (c) is amended by revising the entry for COMAR 26.11.19.02G to read as follows:

§ 52.1070 Identification of plan.

* * * * *

(c) * * *

EPA-APPROVED REGULATIONS IN THE MARYLAND SIP

Code of Maryland administrative regulations (COMAR) citation	Title/subject	State effective date	EPA approval date	Additional explanation/citation at 40 CFR 52.1100
*	*	*	*	*
26.11.19 Volatile Organic Compounds from Specific Processes				
26.11.19.02	Applicability, Determining Compliance, Reporting, and General Requirements.	05/04/98 12/10/01	March 25, 2009 [Insert page number where the document begins].	(c) (174), (c) (175). On 2/27/03 (68 FR 9012), EPA approved a revised rule citation with a State effective date of 5/8/95 [(c)(182)(i)(D)].
*	*	*	*	*

* * * * *

§ 52.1072 [Amended]

■ 3. In § 52.1072, the table in paragraph (d) is removed and reserved.

§ 52.1073 [Amended]

■ 4. In § 52.1073, the table in paragraph (e) is removed and reserved.

[FR Doc. E9–6654 Filed 3–24–09; 8:45 am]

BILLING CODE 6560–50–P

ENVIRONMENTAL PROTECTION AGENCY

40 CFR Part 52

[EPA–R03–OAR–2009–0110; FRL–8787–2]

Approval and Promulgation of Air Quality Implementation Plans; West Virginia; Amendments to the Control of Air Pollution From Combustion of Refuse

AGENCY: Environmental Protection Agency (EPA).

ACTION: Direct final rule.

SUMMARY: EPA is taking direct final action to approve a revision to the West Virginia State Implementation Plan (SIP). The SIP revision amends a regulation to control air pollution from combustion of refuse. EPA is approving these revisions in accordance with the requirements of the Clean Air Act (CAA).

DATES: This rule is effective on *May 26, 2009* without further notice, unless EPA receives adverse written comment by *April 24, 2009.* If EPA receives such comments, it will publish a timely withdrawal of the direct final rule in the **Federal Register** and inform the public that the rule will not take effect.

ADDRESSES: Submit your comments, identified by Docket ID Number EPA–R03–OAR–2009–0110 by one of the following methods:

A. *www.regulations.gov.* Follow the on-line instructions for submitting comments.

B. *E-mail: fernandez.cristina@epa.gov.*

C. *Mail:* EPA–R03–OAR–2009–0110, Cristina Fernandez, Chief, Air Quality Planning Branch, Mailcode 3AP21, U.S. Environmental Protection Agency, Region III, 1650 Arch Street, Philadelphia, Pennsylvania 19103.

D. *Hand Delivery:* At the previously-listed EPA Region III address. Such deliveries are only accepted during the Docket's normal hours of operation, and special arrangements should be made for deliveries of boxed information.

Instructions: Direct your comments to Docket ID No. EPA–R03–OAR–2009–0110. EPA's policy is that all comments received will be included in the public docket without change, and may be made available online at *www.regulations.gov*, including any personal information provided, unless the comment includes information claimed to be Confidential Business Information (CBI) or other information whose disclosure is restricted by statute. Do not submit information that you consider to be CBI or otherwise protected through *www.regulations.gov* or e-mail. The *www.regulations.gov* Web site is an ''anonymous access'' system, which means EPA will not know your identity or contact information unless you provide it in the body of your comment. If you send an e-mail comment directly to EPA without going through *www.regulations.gov*, your e-mail address will be automatically captured and included as part of the comment that is placed in the public docket and made available on the Internet. If you submit an electronic comment, EPA recommends that you include your name and other contact information in the body of your comment and with any disk or CD–ROM you submit. If EPA cannot read your comment due to technical difficulties and cannot contact you for clarification, EPA may not be able to consider your comment. Electronic files should avoid the use of special characters, any form of encryption, and be free of any defects or viruses.

Docket: All documents in the electronic docket are listed in the *www.regulations.gov* index. Although listed in the index, some information is not publicly available, i.e., CBI or other information whose disclosure is restricted by statute. Certain other material, such as copyrighted material, is not placed on the Internet and will be publicly available only in hard copy form. Publicly available docket materials are available either electronically in *www.regulations.gov* or in hard copy during normal business hours at the Air Protection Division, U.S. Environmental Protection Agency, Region III, 1650 Arch Street, Philadelphia, Pennsylvania 19103. Copies of the State submittal are available at the West Virginia Department of Environmental Protection, Division of Air Quality, 601 57th Street, SE., Charleston, WV 25304.

FOR FURTHER INFORMATION CONTACT: Rose Quinto, (215) 814–2182, or by e-mail at *quinto.rose@epa.gov.*

SUPPLEMENTARY INFORMATION:

I. Background

On April 25, 2008, the West Virginia Department of Environmental Protection (WVDEP) submitted a revision to its State Implementation Plan (SIP) for the control of air pollution from combustion of refuse. This SIP revision replaces the current 45CSR6 approved by EPA on April 10, 2003 (68 FR 6627).

II. Summary of SIP Revision

This SIP revision consists of amendments to West Virginia's Rule 45CSR6, which establishes emission standards for particulate matter and requirements for activities involving incineration of refuse, which are not subject to, or are exempted from, regulation under various Federal counterpart regulations for specific combustion source categories. This SIP revision prohibits, with limited exception, open burning and sets forth the registration, permitting, reporting, testing, emergency, natural disaster, and exemption provisions for activities involving the combustion of refuse and land clearing debris. This SIP revision does not prohibit bonfires, campfires or other forms of open burning for the purposes of personal enjoyment and comfort.

Definitions were revised in this SIP revision as follows: (1) Definitions for ''Agency Administrator,'' ''CFR,'' ''Prescribed Burning,'' and ''Secretary'' were added; (2) Definitions for ''Clean Lumber,'' ''Director,'' ''Wood Waste,'' and ''Yard Waste'' were removed; and (3) Definitions for ''Incinerator,'' '' Incinerator Capacity,'' ''Opacity,'' ''Open Burning,'' ''Pathological Waste,'' and ''Refuse'' were amended.

This SIP revision has new provisions for open burning or incineration of animal or poultry carcasses during a declared state of emergency involving highly contagious animal or poultry disease, and a new provision for prescribed burning as approved by the West Virginia Division of Forestry. The SIP revision has also a revised language and a new definition for pathological waste incinerators burning at least 90 percent pathological waste, which are exempted from 45CSR18.

Other revisions to the rule include a revised title, addition of new language for posted incinerator operating instructions, a new exemption section, and general language clarification and correction.

III. Final Action

EPA is approving the amendments of Rule 45CSR6—Control of Air Pollution from Combustion of Refuse, as a revision to the West Virginia SIP. This SIP revision was submitted by WVDEP on April 25, 2008.

EPA is publishing this rule without prior proposal because the Agency views this as a noncontroversial amendment and anticipates no adverse comment. However, in the ''Proposed Rules'' section of today's **Federal Register**, EPA is publishing a separate document that will serve as the proposal to approve the SIP revision if adverse comments are filed. This rule will be effective on May 26, 2009 without further notice unless EPA receives

adverse comment by April 24, 2009. If EPA receives adverse comment, EPA will publish a timely withdrawal in the **Federal Register** informing the public that the rule will not take effect. EPA will address all public comments in a subsequent final rule based on the proposed rule. EPA will not institute a second comment period on this action. Any parties interested in commenting must do so at this time. Please note that if EPA receives adverse comment on an amendment, paragraph, or section of this rule and if that provision may be severed from the remainder of the rule, EPA may adopt as final those provisions of the rule that are not the subject of an adverse comment.

IV. Statutory and Executive Order Reviews

A. General Requirements

Under the CAA, the Administrator is required to approve a SIP submission that complies with the provisions of the CAA and applicable Federal regulations. 42 U.S.C. 7410(k); 40 CFR 52.02(a). Thus, in reviewing SIP submissions, EPA's role is to approve state choices, provided that they meet the criteria of the CAA. Accordingly, this action merely approves state law as meeting Federal requirements and does not impose additional requirements beyond those imposed by state law. For that reason, this action:

- Is not a ''significant regulatory action'' subject to review by the Office of Management and Budget under Executive Order 12866 (58 FR 51735, October 4, 1993);
- Does not impose an information collection burden under the provisions of the Paperwork Reduction Act (44 U.S.C. 3501 *et seq.*);
- Is certified as not having a significant economic impact on a substantial number of small entities under the Regulatory Flexibility Act (5 U.S.C. 601 *et seq.*);
- Does not contain any unfunded mandate or significantly or uniquely affect small governments, as described in the Unfunded Mandates Reform Act of 1995 (Pub. L. 104–4);
- Does not have Federalism implications as specified in Executive Order 13132 (64 FR 43255, August 10, 1999);
- Is not an economically significant regulatory action based on health or safety risks subject to Executive Order 13045 (62 FR 19885, April 23, 1997);
- Is not a significant regulatory action subject to Executive Order 13211 (66 FR 28355, May 22, 2001);
- Is not subject to requirements of Section 12(d) of the National Technology Transfer and Advancement Act of 1995 (15 U.S.C. 272 note) because application of those requirements would be inconsistent with the CAA; and
- Does not provide EPA with the discretionary authority to address, as appropriate, disproportionate human health or environmental effects, using practicable and legally permissible methods, under Executive Order 12898 (59 FR 7629, February 16, 1994).

In addition, this rule does not have tribal implications as specified by Executive Order 13175 (65 FR 67249, November 9, 2000), because the SIP is not approved to apply in Indian country located in the state, and EPA notes that it will not impose substantial direct costs on tribal governments or preempt tribal law.

B. Submission to Congress and the Comptroller General

The Congressional Review Act, 5 U.S.C. 801 *et seq.*, as added by the Small Business Regulatory Enforcement Fairness Act of 1996, generally provides that before a rule may take effect, the agency promulgating the rule must submit a rule report, which includes a copy of the rule, to each House of the Congress and to the Comptroller General of the United States. EPA will submit a report containing this action and other required information to the U.S. Senate, the U.S. House of Representatives, and the Comptroller General of the United States prior to publication of the rule in the **Federal Register**. A major rule cannot take effect until 60 days after it is published in the **Federal Register**. This action is not a ''major rule'' as defined by 5 U.S.C. 804(2).

C. Petitions for Judicial Review

Under section 307(b)(1) of the CAA, petitions for judicial review of this action must be filed in the United States Court of Appeals for the appropriate circuit by May 26, 2009. Filing a petition for reconsideration by the Administrator of this final rule does not affect the finality of this action for the purposes of judicial review nor does it extend the time within which a petition for judicial review may be filed, and shall not postpone the effectiveness of such rule or action. Parties with objections to this direct final rule are encouraged to file a comment in response to the parallel notice of proposed rulemaking for this action published in the proposed rules section of today's **Federal Register**, rather than file an immediate petition for judicial review of this direct final rule, so that EPA can withdraw this direct final rule and address the comment in the proposed rulemaking.

This action pertaining to the amendments of West Virginia's regulation to control air pollution from combustion of refuse, may not be challenged later in proceedings to enforce its requirements. (*See* section 307(b)(2).)

List of Subjects in 40 CFR Part 52

Environmental protection, Air pollution control, Incorporation by reference, Particulate matter, Recordkeeping and reporting.

Dated: March 4, 2009.

William T. Wisniewski,

Acting Regional Administrator, Region III.

■ 40 CFR part 52 is amended as follows:

PART 52—[AMENDED]

■ 1. The authority citation for 40 CFR part 52 continues to read as follows:

Authority: 42 U.S.C. 7401 *et seq.*

Subpart XX—West Virginia

■ 2. In (52.2520, the table in paragraph (c) is amended by revising the entries for 45CSR6, Sections 45–6–1 through 45–6–11 and adding an entry for 45CSR6, Section 45–6–12. The amendments read as follows:

§ 52.2520 Identification of plan.

* * * * *

(c) * * *

EPA-APPROVED REGULATIONS IN THE WEST VIRGINIA SIP

State citation [Chapter 16–20 or 45CSR]	Title/subject	State effective date	EPA approval date	Additional explanation/citation at 40 CFR 52.2565

EPA-APPROVED REGULATIONS IN THE WEST VIRGINIA SIP—Continued

State citation [Chapter 16–20 or 45CSR]	Title/subject	State effective date	EPA approval date	Additional explanation/citation at 40 CFR 52.2565
*	*	*	*	*
[45CSR] Series 6 Control of Air Pollution From Combustion of Refuse				
Section 45–6–1	General	6/1/08	3/25/09*[Insert page number where the document begins]*.	Added subsection 1.1.a.
Section 45–6–2	Definitions	6/1/08	3/25/09*[Insert page number where the document begins]*.	Terms added: ''Agency Administrator,'' ''CFR,'' ''Prescribed Burning,'' and ''Secretary.'' Terms removed: ''Clean Lumber,'' ''Director,'' ''Wood Waste,'' and ''Yard Waste.'' Terms amended: ''Incinerator,'' ''Incinerator Capacity,'' ''Opacity,'' ''Open Burning,'' ''Pathological Waste,'' and ''Refuse.''
Section 45–6–3	Open Burning Prohibited.	6/1/08	3/25/09*[Insert page number where the document begins]*.	Added subsection 3.1.e. (3.1.e.1 through 3.1.e.6). Revised subsections 3.1, 3.1.b, 3.1.c.3, and 3.2.a.
Section 45–6–4	Emission Standards for Incinerators.	6/1/08	3/25/09*[Insert page number where the document begins]*.	Deleted subsections 4.8, and 4.8.a through 4.8.d. Revised subsections 4.1, 4.2, 4.3, 4.5, 4.7 and 4.8.e. Added subsections 4.9 and 4.10.
Section 45–6–5	Registration	6/1/08	3/25/09*[Insert page number where the document begins]*.	Revised subsection 5.1.
Section 45–6–6	Permits	6/1/08	3/25/09*[Insert page number where the document begins]*.	Revised subsections 6.1, 6.1.a.3, 6.1.a.4, 6.1.b.3, 6.1.b.5, 6.1.b.6, and 6.1.b.7. Added subsection 6.2.
Section 45–6–7	Reports and Testing.	6/1/08	3/25/09*[Insert page number where the document begins]*.	Revised subsections 7.1 and 7.2.
Section 45–6–8	Variances	6/1/08	3/25/09*[Insert page number where the document begins]*.	Revised subsections 8.1 and 8.2.
Section 45–6–9	Emergencies and Natural Disasters.	6/1/08	3/25/09*[Insert page number where the document begins]*.	Revised subsection 9.1. Added subsections 9.1.c, 9.2, and 9.2.a through 9.2.c.
Section 45–6–10	Exemptions	6/1/08	3/25/09*[Insert page number where the document begins]*.	New Section.
Section 45–6–11	Effect of the Rule.	6/1/08	3/25/09*[Insert page number where the document begins]*.	Recodified—formerly section 45–6–10.
Section 45–6–12	Inconsistency Between Rules.	6/1/08	3/25/09*[Insert page number where the document begins]*.	Recodified—formerly section 45–6–11. Revised subsection 12.1.
*	*	*	*	*

[FR Doc. E9–6615 Filed 3–24–09; 8:45 am]
BILLING CODE 6560–50–P

ENVIRONMENTAL PROTECTION AGENCY

40 CFR Part 52

[EPA–R01–OAR–2008–0796 ; A–1–FRL–8785–6]

Approval and Promulgation of Air Quality Implementation Plans; Rhode Island; Carbon Monoxide Limited Maintenance Plan for Providence, RI

AGENCY: Environmental Protection Agency (EPA).

ACTION: Direct final rule.

SUMMARY: EPA is approving a State Implementation Plan (SIP) revision submitted by the State of Rhode Island. This revision establishes a limited maintenance plan for the Providence Rhode Island carbon monoxide attainment area and addresses the remaining portion of the ten-year update to the carbon monoxide maintenance plan. This action is being taken in accordance with the Clean Air Act.

DATES: This direct final rule will be effective May 26, 2009, unless EPA receives adverse comments by April 24, 2009. If adverse comments are received, EPA will publish a timely withdrawal of the direct final rule in the **Federal Register** informing the public that the rule will not take effect.

ADDRESSES: Submit your comments, identified by Docket ID Number EPA–R01–OAR–2008–0796 by one of the following methods:

1. *http://www.regulations.gov:* Follow the on-line instructions for submitting comments.
2. *E-mail: arnold.anne@epa.gov.*
3. *Mail:* ''Docket Identification Number EPA–R01–OAR–2008–0796'', Anne Arnold, U.S. Environmental Protection Agency, EPA New England Regional Office, One Congress Street, Suite 1100 (mail code CAQ), Boston, MA 02114–2023.

4. *Hand Delivery or Courier.* Deliver your comments to: Anne Arnold, Manager, Air Quality Planning Unit, Office of Ecosystem Protection, U.S. Environmental Protection Agency, EPA New England Regional Office, One Congress Street, 11th floor, (CAQ), Boston, MA 02114–2023. Such deliveries are only accepted during the Regional Office's normal hours of operation. The Regional Office's official hours of business are Monday through Friday, 8:30 to 4:30, excluding legal holidays.

Instructions: Direct your comments to Docket ID No. EPA–R01–OAR–2008–0796. EPA's policy is that all comments received will be included in the public docket without change and may be made available online at *http://www.regulations.gov,* including any personal information provided, unless the comment includes information claimed to be Confidential Business Information (CBI) or other information whose disclosure is restricted by statute. Do not submit through *http://www.regulations.gov,* or e-mail, information that you consider to be CBI or otherwise protected. The *http://www.regulations.gov* Web site is an ''anonymous access'' system, which means EPA will not know your identity or contact information unless you provide it in the body of your comment. If you send an e-mail comment directly to EPA without going through *http://www.regulations.gov* your e-mail address will be automatically captured and included as part of the comment that is placed in the public docket and made available on the Internet. If you submit an electronic comment, EPA recommends that you include your name and other contact information in the body of your comment and with any disk or CD–ROM you submit. If EPA cannot read your comment due to technical difficulties and cannot contact you for clarification, EPA may not be able to consider your comment. Electronic files should avoid the use of special characters, any form of encryption, and be free of any defects or viruses.

Docket: All documents in the electronic docket are listed in the *http://www.regulations.gov* index. Although listed in the index, some information is not publicly available, *i.e.*, CBI or other information whose disclosure is restricted by statute. Certain other material, such as copyrighted material, is not placed on the Internet and will be publicly available only in hard copy form. Publicly available docket materials are available either electronically in *http://www.regulations.gov* or in hard copy at Office of Ecosystem Protection, U.S. Environmental Protection Agency, EPA New England Regional Office, One Congress Street, Suite 1100, Boston, MA. EPA requests that if at all possible, you contact the contact listed in the **FOR FURTHER INFORMATION CONTACT** section to schedule your inspection. The Regional Office's official hours of business are Monday through Friday, 8:30 to 4:30, excluding legal holidays.

In addition, copies of the state submittal are also available for public inspection during normal business hours, by appointment at the State Air Agency; Office of Air Resources, Department of Environmental Management, 235 Promenade Street, Providence, RI 02908–5767.

FOR FURTHER INFORMATION CONTACT: Donald O. Cooke, Air Quality Planning Unit, U.S. Environmental Protection Agency, EPA New England Regional Office, One Congress Street, Suite 1100 (CAQ), Boston, MA 02114–2023, telephone number (617) 918–1668, fax number (617) 918–0668, e-mail *cooke.donald@epa.gov.*

SUPPLEMENTARY INFORMATION: Throughout this document whenever ''we,'' ''us,'' or ''our'' is used, we mean EPA.

Organization of this document. The following outline is provided to aid in locating information in this preamble.

I. Background and Purpose
II. Criteria for Limited Maintenance Plan Designation
A. EPA Guidance
B. Demonstration of Maintenance
C. Emission Inventory
D. Monitoring Network and Verification of Continued Attainment
III. Contingency
IV. State Commitments
V. Conformity
VI. Final Action
VII. Statutory and Executive Order Reviews

I. Background and Purpose

In 1989, Rhode Island submitted a request to EPA to redesignate Providence to attainment status for carbon monoxide (CO). Since the EPA had not yet approved that request when the Clean Air Act Amendments of 1990 (CAAA) were enacted, Rhode Island submitted a revised redesignation request to EPA in 1991 that addressed additional requirements in the CAAA. The initial ten-year maintenance plan relied on emissions reductions from the Federal Motor Vehicle Emission Control Program (FMVECP) and from the Prevention of Significant Deterioration (PSD) program, which replaced the New Source Review (NSR) program when the redesignation became effective. The maintenance plan also stated that, if the carbon monoxide National Ambient Air Quality Standard (NAAQS) was violated in the ten year period covered by the plan, the State would submit a plan to correct the violation within 18 months of the violation. On September 5, 1991, the EPA published a Final Rule in the **Federal Register** that redesignated Providence to attainment status for CO (56 FR 43872).

Section 175A of the CAAA requires redesignated areas to submit a second ten-year maintenance plan to the EPA eight years after the first plan is approved. The second plan must demonstrate that compliance with the NAAQS will continue during the ten year period following the expiration of the first maintenance plan. In the case of Rhode Island, the second ten-year maintenance plan was scheduled to be submitted in 1999 and would cover the years 2001 through 2011. Rhode Island did not submit a second ten-year maintenance plan at that time; however the emissions control programs established in the first ten-year maintenance plan continued to be in effect. Monitored levels of carbon monoxide in the Providence attainment area continued to be well below the 8-hour NAAQS standard of 9.0 parts per million (ppm), and have stayed on a downward trend. The 1-hour CO NAAQS of 32 parts per million was never exceeded in the State of Rhode Island.

In June 2007, Rhode Island Department of Environmental Management (RI DEM) requested permission to discontinue monitoring for CO at the Dorrance Street site in Providence. This request was prompted by amendments to EPA's monitoring requirements (*Final Rule:* Revisions to Ambient Air Monitoring Regulations; October 17, 2006; 71 FR 61236), which removed minimum requirements for CO monitoring for determining compliance with NAAQS. The amended EPA regulation continued to require the operation of CO monitors at Type II stations in the Photochemical Assessment Monitoring Sites (PAMS) network. Rhode Island has operated a year round CO monitor at its Type II PAMS site in East Providence since 1998.

In its request to remove the Dorrance Street CO monitor, RI DEM stated that the monitor no longer served a useful purpose because the CO NAAQS had not been exceeded for 20 years and was extremely unlikely to be exceeded in the future, since monitored levels were considerably below the NAAQS and continued to trend downward and the emissions control programs that had resulted in this decrease remained in

place. Moreover, this site was no longer useful for predicting the State's daily Air Quality Index (AQI), which serves to warn the public about impending poor air quality, because all CO measurements recorded since 2001 had been in the ''good'' category of the AQI.

In an October 24, 2007 letter from Michael Kenyon, Director of the Office of Environmental Measurement and Evaluation, EPA Region I approved the termination of the Dorrance Street site ''subject to the revision of the Providence carbon monoxide maintenance plan being approved by EPA.'' At issue was the fact that the original maintenance plan relied on the levels measured by the Dorrance Street monitor to track continued attainment of the CO NAAQS. EPA advised that, if CO monitoring at that site were discontinued, Rhode Island would need to revise its CO maintenance plan to provide another mechanism to track continued attainment until the end of the second ten-year maintenance period (September 2011) and to identify levels that would trigger the need for additional action. RI DEM agreed to revise its plan and discontinued CO monitoring at the Dorrance Street site at the end of June 2007.

On September 22, 2008, the State of Rhode Island submitted a formal revision to its State Implementation Plan (SIP) for a Limited Maintenance Plan for the Providence Rhode Island Carbon Monoxide Maintenance Area. The SIP revision consists of a second follow-on ten-year carbon monoxide maintenance plan for the Providence carbon monoxide attainment area to address the remainder of the maintenance plan period (period 2001 to 2011), and a request for a limited carbon monoxide maintenance plan designation. The SIP revision also includes the State's commitment to year round carbon monoxide monitoring at the East Providence Photochemical Assessment Monitoring Station (PAMS) site.

II. Criteria for Limited Maintenance Plan Designation

A. EPA Guidance

In November 1994, EPA issued guidance regarding a limited maintenance plan option for nonclassifiable ozone nonattainment areas.[1] In October 1995, EPA issued further guidance that extended that option to nonclassifiable carbon monoxide nonattainment areas.[2] To qualify for the limited maintenance option, an area's 8-hour average CO design value at the time of redesignation must be at or below 7.65 ppm (85% of the NAAQS).

Unlike full maintenance plans, limited maintenance plans are not required to include a projection of emissions over the maintenance period, because, according to EPA's 1995 guidance, ''the continued applicability of prevention of significant deterioration (PSD) requirements, any control measures already in the SIP, and Federal measures (such as the Federal Motor Vehicle Emission Control Program) should provide adequate assurance of maintenance for those areas.''

Moreover, the establishment of emissions budgets for conformity purposes is not required as part of limited maintenance plans. According to the 1995 guidance, ''it is unreasonable to expect that such an area will experience so much growth * * * that a violation of the CO NAAQS would result.'' Therefore, budgets for transportation and general conformity determinations are not required for areas with approved limited maintenance plans.

B. Demonstration of Maintenance

For areas such as Providence Rhode Island that utilize EPA's limited maintenance plan approach, the maintenance demonstration is considered to be satisfied for ''not classified'' areas if the monitoring data show the design value is at or below 7.65 ppm, or 85 percent of the level of the 8-hour carbon monoxide CO NAAQS. The design value must be based on the 8 consecutive quarters of data. For such areas, there is no requirement to project emissions of air quality over the maintenance period. EPA believes if the area begins the maintenance period at, or below, 85% of the CO 8 hour NAAQS, the applicability of Prevention of Significant Deterioration (PSD) requirements, the control measures already in the SIP, and Federal measures, should provide adequate assurance of maintenance over the initial 10-year maintenance period. In addition, the design value for the area must continue to be at or below 7.65 ppm until the time of final EPA action on the redesignation. At the time of redesignation, in 1991, Providence's 8-hour CO design value was 7.4 ppm, and had been below 7.65 since 1989. The design value has continued to decline as shown in Table 1. The design value for 2006, the last full year that the Providence monitor operated, was 2.5 ppm (as compared to the NAAQS of 9.0 ppm). Therefore, Providence demonstrates maintenance and is clearly eligible for the limited maintenance plan option.

TABLE 1—8-HOUR CARBON MONOXIDE DESIGN VALUES FOR PROVIDENCE RHODE ISLAND

[8-Hour carbon monoxide design values for Providence Rhode Island]

Year	Design value (ppm)
1991	7.4
1998	4.7
1999	3.9
2000	3.5
2001	3.8
2002	2.7
2003	2.3
2004	2.5
2005	2.5
2006	2.5
2007	2.5

C. Emission Inventory

An annual carbon monoxide emission inventory was prepared for both Rhode Island Statewide and Providence County for the year 2002, a year in which attainment was monitored in the Providence Rhode Island carbon monoxide attainment area, and the 8-hour carbon monoxide design value was 2.7 parts per million. *Please see* Table 2. below:

[1] Memorandum ''Limited Maintenance Plan Option for Nonclassifiable Ozone Nonattainment Areas'' from Sally L. Shaver, Director, EPA Air Quality Strategies and Standards Division, to Regional Air Directors, November 16, 1994.

[2] Memorandum ''Limited Maintenance Plan Option for Nonclassifiable CO Nonattainment Areas'' from Joseph W. Paisie, Group Leader, EPA Integrated Policy and Strategies Group, to Air Branch Chiefs, October 6, 1995.

TABLE 2—STATEWIDE AND PROVIDENCE COUNTY RHODE ISLAND 2002 ANNUAL CARBON MONOXIDE EMISSIONS

[2002 carbon monoxide annual emissions (tons per year)]

Source	Rhode Island statewide carbon monoxide emissions	Providence county carbon monoxide emissions
Stationary point	1,742	1,663
Stationary nonpoint	10,535	4,875
Non-road mobile	68,804	30,501
On-road mobile	188,312	109,794
Total Anthropogenic (man-made)	269,393	146,833
Biogenic	1,925	554
Total	271,318	147,387

D. Monitoring Network and Verification of Continued Attainment

In the limited maintenance plan, Rhode Island Department of Environmental Management commits to maintain a continuous CO monitor at the East Providence PAMS site and re-establish a CO monitoring site meeting EPA specifications in downtown Providence should (1) the East Providence 8-hour CO design value increase to five parts per million; or (2) total calendar year CO emissions in Providence County from all anthropogenic sources exceed 190,883 tons per year (a value 30% higher than the total anthropogenic emissions in the 2002 inventory); or (3) average motor vehicle CO emissions measured by the remote sensing program in any year between 2008 and 2011 exceed 0.39%, which is three times the 2006 value.

III. Contingency

EPA concurs with RI DEM that specific contingency measures are not needed at the present, since current CO levels are so far below the NAAQS and emissions from mobile sources, the dominant source of CO in the State and in Providence County, are decreasing as the percentage of vehicles subject to tighter Federal Motor Vehicle Emission Control Program (FMVECP) standards increase in the State. However, if monitoring for CO in downtown Providence is triggered, based on the criteria specified below, in ''State Commitments,'' RI DEM will develop contingency measures that will go into effect if a violation of the NAAQS occurs without further action by the State.

IV. State Commitments

EPA's guidance for limited maintenance plans also requires states to include several commitments as part of the SIP revision. To fulfill those requirements, Rhode Island's September 22, 2008 SIP submittal includes the following commitments:

- RI DEM will maintain a continuous CO monitor at the East Providence PAMS site to verify continued compliance with the CO NAAQS in the CO maintenance area;
- Should the East Providence 8-hour CO design value increase to five parts per million, RI DEM will re-establish a CO Monitoring site meeting EPA specifications in downtown Providence within six months;
- Should total calendar year CO emissions in Providence County from all anthropogenic sources exceed 190,883 tons per year (a value 30% higher than the total anthropogenic emissions in the 2002 inventory) RI DEM will re-establish a CO Monitoring site meeting EPA specifications in downtown Providence within six months;
- Should average motor vehicle CO emissions measured by the remote sensing program in any year between 2008 and 2011 exceed 0.39%, which is three times the 2006 value, RI DEM will re-establish a CO Monitoring site meeting EPA specifications in downtown Providence within six months;
- Should the design value in the Providence maintenance area exceed 7.65 ppm, RI DEM will coordinate with EPA to: Verify the validity of the data; evaluate whether the data should be excluded based on an ''exceptional event''; and, if warranted based on the data review, develop a full maintenance plan for the affected maintenance areas; and,
- RI DEM will continue to ensure that project-level CO evaluations of transportation projects (*i.e.*, project-level conformity, as described in 40 CFR 93.116) in the Providence CO attainment area are conducted through the end of the second ten-year maintenance period.

V. Conformity

Section 176(c) of the Clean Air Act (CAA) defines transportation conformity as conformity to the state implementation plan's purpose of eliminating or reducing the severity and number of violations of the NAAQS and achieving expeditious attainment of such standards. The CAA further defines transportation conformity to mean that no Federal transportation activity will: (1) Cause or contribute to any new violation of any standard in any area; (2) increase the frequency or severity of any existing violation of any standard in any area; or (3) delay timely attainment of any standard or any required interim emission reductions or other milestones in any area. The Federal Transportation Conformity Rule, 40 CFR part 93, subpart A, sets forth the criteria and procedures for demonstrating and assuring conformity of transportation plans, programs and projects which are developed, funded or approved by the U.S. Department of Transportation, and by metropolitan planning organizations or other recipients of funds under title 23 U.S.C. or the Federal Transit Laws (49 U.S.C. 53). The transportation conformity rule applies within all nonattainment and maintenance areas. As prescribed by the transportation conformity rule, once an area has an applicable state implementation plan with motor vehicle emissions budgets, the expected emissions from planned transportation activities must be consistent with (''conform to'') such established budgets for that area.

In the case of the Providence Rhode Island CO limited maintenance plan area, however, the emissions budgets may be treated as essentially not constraining for the length of the second maintenance period as long as the area continues to meet the limited maintenance criteria, because there is

no reason to expect that these areas will experience so much growth in that period that a violation of the CO NAAQS would result. In other words, emissions from on-road transportation sources need not be capped for the remainder of the maintenance period because it is unreasonable to believe that emissions from such sources would increase to a level that would threaten the air quality in this area for the duration of this maintenance period. Therefore, for the limited maintenance plan CO maintenance area, all Federal actions that require conformity determinations under the transportation conformity rule are considered to satisfy the regional emissions analysis and ''budget test'' requirements in 40 CFR 93.118 of the rule.

Since limited maintenance plan areas are still maintenance areas, however, transportation conformity determinations are still required for transportation plans, programs and projects. Specifically, for such determinations, transportation plans, transportation improvement programs, and projects must still demonstrate that they are fiscally constrained (40 CFR part 108) and must meet the criteria for consultation and Transportation Control Measure (TCM) implementation in the conformity rule (40 CFR 93.112 and 40 CFR 93.113, respectively). In addition, projects in limited maintenance areas will still be required to meet the criteria for CO hot spot analyses to satisfy ''project level'' conformity determinations (40 CFR 93.116 and 40 CFR 93.123) which must incorporate the latest planning assumptions and models that are available. All aspects of transportation conformity (with the exception of satisfying the emission budget test) will still be required.

If the carbon monoxide attainment area monitors carbon monoxide concentrations at or above the limited maintenance eligibility criteria, or 7.65 parts per million, then that maintenance area would no longer qualify for a limited maintenance plan and would revert to a full maintenance plan. In this event, the limited maintenance plan would remain applicable for conformity purposes only until the full maintenance plan is submitted and EPA has found its motor vehicle emissions budgets adequate for conformity purposes or EPA approves the full maintenance plan SIP revision. At that time regional emissions analyses would resume as a transportation conformity criteria.

VI. Final Action

EPA is approving Rhode Island's September 22, 2008 State Implementation Plan (SIP) revision establishing a limited maintenance plan for the Providence Rhode Island carbon monoxide attainment area.

The EPA is publishing this action without prior proposal because the Agency views this as a noncontroversial amendment and anticipates no adverse comments. However, in the proposed rules section of this **Federal Register** publication, EPA is publishing a separate document that will serve as the proposal to approve the SIP revision should relevant adverse comments be filed. This rule will be effective May 26, 2009 without further notice unless the Agency receives relevant adverse comments by April 24, 2009.

If the EPA receives such comments, then EPA will publish a notice withdrawing the final rule and informing the public that the rule will not take effect. All public comments received will then be addressed in a subsequent final rule based on the proposed rule. The EPA will not institute a second comment period on the proposed rule. All parties interested in commenting on the proposed rule should do so at this time. If no such comments are received, the public is advised that this rule will be effective on May 26, 2009 and no further action will be taken on the proposed rule. Please note that if EPA receives adverse comment on an amendment, paragraph, or section of this rule and if that provision may be severed from the remainder of the rule, EPA may adopt as final those provisions of the rule that are not the subject of an adverse comment.

VII. Statutory and Executive Order Reviews

Under the Clean Air Act, the Administrator is required to approve a SIP submission that complies with the provisions of the Act and applicable Federal regulations. 42 U.S.C. 7410(k); 40 CFR 52.02(a). Thus, in reviewing SIP submissions, EPA's role is to approve state choices, provided that they meet the criteria of the Clean Air Act. Accordingly, this action merely approves state law as meeting Federal requirements and does not impose additional requirements beyond those imposed by state law. For that reason, this action:

- Is not a ''significant regulatory action'' subject to review by the Office of Management and Budget under Executive Order 12866 (58 FR 51735, October 4, 1993);
- Does not impose an information collection burden under the provisions of the Paperwork Reduction Act (44 U.S.C. 3501 *et seq.*);
- Is certified as not having a significant economic impact on a substantial number of small entities under the Regulatory Flexibility Act (5 U.S.C. 601 *et seq.*);
- Does not contain any unfunded mandate or significantly or uniquely affect small governments, as described in the Unfunded Mandates Reform Act of 1995 (Pub. L. 104–4);
- Does not have Federalism implications as specified in Executive Order 13132 (64 FR 43255, August 10, 1999);
- Is not an economically significant regulatory action based on health or safety risks subject to Executive Order 13045 (62 FR 19885, April 23, 1997);
- Is not a significant regulatory action subject to Executive Order 13211 (66 FR 28355, May 22, 2001);
- Is not subject to requirements of Section 12(d) of the National Technology Transfer and Advancement Act of 1995 (15 U.S.C. 272 note) because application of those requirements would be inconsistent with the Clean Air Act; and
- Does not provide EPA with the discretionary authority to address, as appropriate, disproportionate human health or environmental effects, using practicable and legally permissible methods, under Executive Order 12898 (59 FR 7629, February 16, 1994).

In addition, this rule does not have tribal implications as specified by Executive Order 13175 (65 FR 67249, November 9, 2000), because the SIP is not approved to apply in Indian country located in the state, and EPA notes that it will not impose substantial direct costs on tribal governments or preempt tribal law.

The Congressional Review Act, 5 U.S.C. 801 *et seq.*, as added by the Small Business Regulatory Enforcement Fairness Act of 1996, generally provides that before a rule may take effect, the agency promulgating the rule must submit a rule report, which includes a copy of the rule, to each House of the Congress and to the Comptroller General of the United States. EPA will submit a report containing this action and other required information to the U.S. Senate, the U.S. House of Representatives, and the Comptroller General of the United States prior to publication of the rule in the **Federal Register**. A major rule cannot take effect until 60 days after it is published in the **Federal Register**. This action is not a ''major rule'' as defined by 5 U.S.C. 804(2).

Under section 307(b)(1) of the Clean Air Act, petitions for judicial review of this action must be filed in the United States Court of Appeals for the

appropriate circuit by May 26, 2009. Filing a petition for reconsideration by the Administrator of this final rule does not affect the finality of this action for the purposes of judicial review nor does it extend the time within which a petition for judicial review may be filed, and shall not postpone the effectiveness of such rule or action. Parties with objections to this direct final rule are encouraged to file a comment in response to the parallel notice of proposed rulemaking for this action published in the proposed rules section of today's **Federal Register**, rather than file an immediate petition for judicial review of this direct final rule, so that EPA can withdraw this direct final rule and address the comment in the proposed rulemaking. This action may not be challenged later in proceedings to enforce its requirements. (See section 307(b)(2).)

List of Subjects in 40 CFR Part 52

Environmental protection, Air pollution control, Carbon monoxide, Incorporation by reference, Intergovernmental relations, Lead, Nitrogen dioxide, Ozone, Particulate matter, Reporting and recordkeeping requirements, Sulfur oxides, Volatile organic compounds.

Dated: March 12, 2009.

Ira W. Leighton,

Acting Regional Administrator, EPA New England.

■ Part 52 of chapter I, title 40 of the Code of Federal Regulations is amended as follows:

PART 52—[AMENDED]

■ 1. The authority citation for part 52 continues to read as follows:

Authority: 42 U.S.C. 7401 *et seq.*

Subpart OO—Rhode Island

■ 2. Section 52.2089 is added to read as follows:

§ 52.2089 Control strategy: carbon monoxide.

(a) Approval—On September 22, 2008, the Rhode Island Department of Environmental Management submitted a request to establish a limited maintenance plan for the Providence Rhode Island carbon monoxide attainment area for the remainder of the second ten-year maintenance plan. The State of Rhode Island has committed to year round carbon monoxide monitoring at the East Providence Photochemical Assessment Monitoring Station (PAMS) site; re-establishing downtown Providence CO monitoring if criteria specified in the Limited Maintenance Plan are triggered; and, ensuring that project-level carbon monoxide evaluations of transportation projects in the maintenance area are conducted. The limited maintenance plan satisfies all applicable requirements of section 175A of the Clean Air Act. Approval of a limited maintenance plan is conditioned on maintaining levels of ambient carbon monoxide levels below the required limited maintenance plan 8-hour carbon monoxide design value criterion of 7.65 parts per million. If the Limited Maintenance Plan criterion is no longer satisfied, Rhode Island must develop a full maintenance plan to meet Clean Air Act requirements.

(b) [Reserved]

[FR Doc. E9–6643 Filed 3–24–09; 8:45 am]

BILLING CODE 6560–50–P

ENVIRONMENTAL PROTECTION AGENCY

40 CFR Part 52

[EPA–R04–OAR–2007–1186–200821(a); FRL–8781–5]

Approval and Promulgation of Air Quality Implementation Plans: Kentucky; Approval Section 110(a)(1) Maintenance Plans for the 1997 8-Hour Ozone Standard for the Huntington-Ashland Area, Lexington Area and Edmonson County

AGENCY: Environmental Protection Agency (EPA).

ACTION: Direct final rule.

SUMMARY: EPA is approving revisions to the Kentucky State Implementation Plan (SIP) concerning the maintenance plans addressing the 1997 8-hour ozone standard for the following areas: the Kentucky portion of the Huntington—Ashland Area (a portion of Greenup County); Lexington Area (Fayette and Scott Counties); and Edmonson County. These maintenance plans were submitted to EPA on May 27, 2008, by the Commonwealth of Kentucky and ensure the continued attainment of the 1997 8-hour ozone National Ambient Air Quality Standard (NAAQS) through the year 2020. These plans meet the statutory and regulatory requirements, and are consistent with EPA's guidance. EPA is approving the revisions pursuant to section 110 of the Clean Air Act (''CAA'' or ''Act''). On March 12, 2008, EPA issued a revised ozone standard. The current action, however, is being taken to address requirements under the 1997 ozone standard. Requirements for the Huntington-Ashland, Lexington, and Edmonson County Areas under the 2008 standard will be addressed in the future.

DATES: This rule is effective on *May 26, 2009* without further notice, unless EPA receives adverse comment by *April 24, 2009.* If EPA receives such comment, EPA will publish a timely withdrawal in the **Federal Register** informing the public that this rule will not take effect.

ADDRESSES: Submit your comments, identified by Docket ID No. EPA–R04–OAR–2007–1186, by one of the following methods:

1. *Federal eRulemaking Portal: www.regulations.gov:* Follow the on-line instructions for submitting comments.
2. *E-mail:* Jane Spann at *spann.jane@epa.gov.*
3. *Fax:* (404) 562–9019.
4. *Mail:* ''EPA–R04–OAR–2007–1186,'' Regulatory Development Section, Air Planning Branch, Air, Pesticides and Toxics Management Division, U.S. Environmental Protection Agency, Region 4, 61 Forsyth Street, SW., Atlanta, Georgia 30303–8960.
5. *Hand Delivery or Courier:* Jane Spann, Regulatory Development Section, Air Planning Branch, Air, Pesticides and Toxics Management Division, U.S. Environmental Protection Agency, Region 4, 61 Forsyth Street, SW., Atlanta, Georgia 30303–8960. Such deliveries are only accepted during the Regional Office's normal hours of operation. The Regional Office's official hours of business are Monday through Friday, 8:30 to 4:30, excluding Federal holidays.

Instructions: Direct your comments to Docket ID No. ''EPA–R04–OAR–2007–1186.'' EPA's policy is that all comments received will be included in the public docket without change and may be made available online at *www.regulations.gov,* including any personal information provided, unless the comment includes information claimed to be Confidential Business Information (CBI) or other information whose disclosure is restricted by statute. Do not submit through *www.regulations.gov* or e-mail, information that you consider to be CBI or otherwise protected. The *www.regulations.gov* website is an ''anonymous access'' system, which means EPA will not know your identity or contact information unless you provide it in the body of your comment. If you send an e-mail comment directly to EPA without going through *www.regulations.gov,* your e-mail address will be automatically captured and included as part of the comment that is placed in the public docket and made available on the Internet. If you submit an electronic comment, EPA recommends that you include your name and other contact information in

the body of your comment and with any disk or CD–ROM you submit. If EPA cannot read your comment due to technical difficulties and cannot contact you for clarification, EPA may not be able to consider your comment. Electronic files should avoid the use of special characters, any form of encryption, and be free of any defects or viruses. For additional information about EPA's public docket visit the EPA Docket Center homepage at *http://www.epa.gov/epahome/dockets.htm.*

Docket: All documents in the electronic docket are listed in the *www.regulations.gov* index. Although listed in the index, some information is not publicly available, i.e., CBI or other information whose disclosure is restricted by statute. Certain other material, such as copyrighted material, is not placed on the Internet and will be publicly available only in hard copy form. Publicly available docket materials are available either electronically in *www.regulations.gov* or in hard copy at the Regulatory Development Section, Air Planning Branch, Air, Pesticides and Toxics Management Division, U.S. Environmental Protection Agency, Region 4, 61 Forsyth Street, SW., Atlanta, Georgia 30303–8960. EPA requests that if at all possible, you contact the person listed in the **FOR FURTHER INFORMATION CONTACT** section to schedule your inspection. The Regional Office's official hours of business are Monday through Friday, 8:30 to 4:30, excluding Federal holidays.

FOR FURTHER INFORMATION CONTACT: Jane Spann or Zuri Farngalo, Regulatory Development Section, Air Planning Branch, Air, Pesticides and Toxics Management Division, U.S. Environmental Protection Agency, Region 4, 61 Forsyth Street, SW., Atlanta, Georgia 30303–8960. Jane Spann may be reached by phone at (404) 562–9029 or by electronic mail address *spann.jane@epa.gov.* The telephone number for Zuri Farngalo is (404) 562–9152 and the electronic mail address is *farngalo.zuri@epa.gov.*

SUPPLEMENTARY INFORMATION:

Table of Contents

I. Background
II. Analysis of the Commonwealth's Submittals
III. Final Action
IV. Statutory and Executive Order Reviews

I. Background

In accordance with the CAA, the Huntington-Ashland Area [1], Lexington Area [2] and Edmonson County were designated as nonattainment for the 1-hour ozone NAAQS (effective January 6, 1992, 56 FR 56694).

On November 13, 1992, the Commonwealth of Kentucky submitted a request to redesignate the Lexington Area and Edmonson County to attainment for the 1-hour ozone standard. Subsequently, on November 12, 1993, the Commonwealth of Kentucky submitted a request to redesignate the Huntington-Ashland Area to attainment for the 1-hour ozone standard. At the same time as the redesignation requests, Kentucky submitted the required ozone monitoring data and maintenance plans to ensure that the Areas would remain in attainment for the 1-hour ozone standard for a period of 10 years, consistent with the CAA 175A(a). The maintenance plans submitted by Kentucky followed EPA guidance for limited maintenance areas, which was provided for the 1-hour ozone standard areas that have design values less than 85 percent of the applicable standard. In this case, the applicable standard was the 1-hour ozone standard of 0.12 parts per million (ppm).

EPA approved Kentucky's requests to redesignate the Huntington-Ashland Area (60 FR 33748), Lexington Area (60 FR 47089) and Edmonson County (59 FR 55053) to attainment for the 1-hour ozone standard. The maintenance plan for the Huntington-Ashland Area (a portion of Greenup County) was approved on June 29, 1995, with an effective date of June 29, 1995 (60 FR 33748). The maintenance plan for the Lexington Area was approved on September 11, 1995, with an effective date of November 13, 1995 (60 FR 47089). The 1-hour ozone maintenance plan for Edmonson County was approved on November 3, 1994, with an effective date of January 3, 1995 (59 FR 55053).

On April 30, 2004, EPA designated areas for the 1997 8-hour ozone NAAQS (69 FR 23858), and published the final Phase I Implementation Rule for the 1997 8-hour ozone NAAQS (69 FR 23951) (Phase I Rule). The Huntington-Ashland Area, Lexington Area, and Edmonson County were designated as attainment for the 1997 8-hour ozone standard, effective June 15, 2004. The attainment areas consequently were required to submit 10-year maintenance plans under section 110(a)(1) of the CAA and the Phase I Rule. On May 20, 2005, EPA issued guidance providing information on how a state might fulfill the maintenance plan obligation established by the CAA and the Phase I Rule (Memorandum from Lydia N. Wegman to Air Division Directors, *Maintenance Plan Guidance Document for Certain 8-hour Ozone Areas Under Section 110(a)(1) of Clean Air Act,* May 20, 2005—hereafter referred to as ''Wegman Memorandum''). On December 22, 2006, the United States Court of Appeals for the District of Columbia Circuit issued an opinion that vacated portions of EPA's Phase I Implementation Rule for the 1997 8-hour Ozone Standard. *See South Coast Air Quality Management District.* v. *EPA,* 472 F.3d 882 (D.C. Cir. 2006). The Court vacated those portions of the Rule that provided for regulation of the 1997 8-hour ozone nonattainment areas designated under Subpart 1 in lieu of Subpart 2 (of part D of the CAA), among other portions. The Court's decision does not alter any requirements under the Phase I Rule for maintenance plans. Kentucky's May 27, 2008, proposed SIP revision satisfies the section 110(a)(1) CAA requirements for a plan that provides for implementation, maintenance, and enforcement of the 1997 8-hour ozone NAAQS in the Huntington-Ashland, Lexington, and Edmonson County Areas.

II. Analysis of the State's Submittals

On May 27, 2008, the Commonwealth of Kentucky submitted SIP revisions containing 1997 8-hour ozone maintenance plans for the portion of Greenup County in the Huntington-Ashland Area, the Lexington Area, and Edmonson County as required by section 110(a)(1) of the CAA and the provisions of EPA's Phase I Rule (*see* 40 CFR 51.905(a)(4)). The purpose of these maintenance plans are to ensure continued attainment and maintenance of the 1997 8-hour ozone NAAQS in the Huntington-Ashland Area, Lexington Area, and Edmonson County until 2020.

As required, these plans provide for continued attainment and maintenance of the 1997 8-hour ozone NAAQS in the area for 10 years from the effective date of the area's designation as attainment for the 1997 8-hour ozone NAAQS, and include components illustrating how each area will continue attainment of the 1997 8-hour ozone NAAQS and provides contingency measures. Each of

[1] For the 1997 8-hour ozone standard Scott and Fayette Counties were previously in the Lexington 1-hour maintenance area but were individually designated attainment for the 1997 8-hour ozone standard.

[2] The 1-hour ozone nonattainment area for the Huntington-Ashland includes Boyd County and a portion of Greenup County in Kentucky. For the 1997 8-hour ozone standard, Boyd County in the Huntington-Ashland area was designated nonattainment, whereas the portion of Greenup County that was designated nonattainment for the 1-hour ozone standard was designated attainment for the 1997 8-hour ozone standard.

the section 110(a)(1) plan components is discussed below for each area.

a. Attainment Inventory. Kentucky developed comprehensive inventories of volatile organic compounds (VOC) and nitrogen oxide (NO_X) emissions from area, stationary, and mobile sources using 2002 as the base year to demonstrate maintenance of the 1997 8-hour ozone NAAQS for the Huntington-Ashland Area, Lexington Area and Edmonson County. The year 2002 is an appropriate year for Kentucky to base attainment level emissions because states may select any one of the three years on which the 1997 8-hour attainment designation was based (2001, 2002, and 2003). The Commonwealth's submittals contain the detailed inventory data and summaries by source category. Using the 2002 inventory as a base year reflects one of the years used for calculating the air quality design values on which the 1997 8-hour ozone designation decisions were based. 2002 also is one of the years in the 2002–2004 period used to establish baseline visibility levels for the regional haze program.

A further practical reason for selecting 2002 as the base year emission inventory is that section 110(a)(2)(B) of the CAA and the Consolidated Emissions Reporting Rule (67 FR 39602, June 10, 2002) require states to submit emissions inventories for all criteria pollutants and their precursors every three years, on a schedule that includes the emissions year 2002. The due date for the 2002 emissions inventory is established in the Rule as June 2004. In accordance with these requirements, Kentucky compiles a statewide emissions inventory for point sources on an annual basis. On-road mobile emissions of VOC and NO_X were estimated using MOBILE 6.2 motor vehicle emissions factor computer model. Non-road mobile emissions data were derived using the U.S. EPA's Non-Road Model.

In projecting data for the attainment year 2020 inventory, Kentucky used several methods to project data from the base year 2002 to the years 2005, 2008, 2011, 2014, 2017 and 2020. These projected inventories were developed using EPA-approved technologies and methodologies. Point source and non-point source projections were derived from the Emissions Growth Analysis System version 4.0 (EGAS 4.0). Non-road mobile projections were derived from EGAS 4.0, as well as from the National Mobile Inventory Model.

The following tables provide VOC and NO_X emissions data for the 2002 base attainment year inventory, as well as projected VOC and NO_X emission inventory data for 2005, 2008, 2011, 2014, 2017 and 2020.

TABLE 1—PARTIAL GREENUP COUNTY PORTION OF HUNTINGTON-ASHLAND AREA VOC AND NO_X EMISSIONS INVENTORY

Emissions	2002	2005	2008	2011	2014	2017	2020
Total VOC (tons per day)	3.14	2.86	2.69	2.53	2.43	2.36	2.33
Total NO_X (tons per day)	2.42	2.18	1.95	1.72	1.47	1.29	1.19

As shown in Table 1 above, the Kentucky portion of the Huntington-Ashland area is projected to decrease total VOC and NO_X emissions from the base year of 2002 to the maintenance year of 2020, thus demonstrating continued attainment/maintenance of the 1997 8-hour ozone standard.

TABLE 2—LEXINGTON AREA (SCOTT AND FAYETTE COUNTIES)

[VOC and NO_X Emissions Inventory]

Emissions	2002	2005	2008	2011	2014	2017	2020
Total VOC (tons per day)	50.89	47.87	48.23	47.89	48.12	48.93	50.13
Total NO_X (tons per day)	39.33	32.66	29.85	25.77	21.15	17.97	15.98

As shown in Table 2 above, the Lexington Area is projected to decrease total NO_X emissions from the base year of 2002 to the maintenance year of 2020. Total VOC emissions steadily decrease from the base year of 2002 through 2008, but are then projected to increase by 1.2 tons per day between the years 2017 to the maintenance year of 2020; however, year 2020 emissions are projected as less than the baseline year emission level. Thus, it is demonstrated that the 1997 8-hour ozone standard will continue to be attainment/maintained.

TABLE 3—EDMONSON COUNTY VOC AND NO_X EMISSIONS INVENTORY

Emissions	2002	2005	2008	2011	2014	2017	2020
Total VOC (tons per day)	2.72	2.86	2.89	2.80	2.63	2.40	2.24
Total NO_X (tons per day)	1.34	1.17	1.09	0.95	0.80	0.68	0.61

As shown in Table 3 above, Edmonson County is projected to decrease total VOC and NO_X emissions from the base year of 2002 to the maintenance year of 2020. VOC emissions increased slightly between the base year of 2002 and 2011; however, this small spike is not anticipated to affect maintenance. Total VOC's are projected to decrease to levels below that of the base year by 2020, thus demonstrating continued maintenance of the 1997 8-hour ozone standard.

As shown in the tables above, Kentucky has demonstrated that the future year emissions will be less than the 2002 base attainment year's emissions for the 1997 8-hour ozone NAAQS. The attainment inventories submitted by Kentucky for these areas are consistent with the criteria discussed in the Wegman Memorandum. EPA finds that the future emissions levels in 2005, 2008, 2011, 2014, 2017, and 2020 are expected to be similar to or less than the emissions levels in 2002. In the event that a future

8-hour ozone monitoring reading in theses areas is found to violate the 1997 8-hour ozone standard, the contingency plan section of the maintenance plans includes measures that will be promptly implemented to ensure that each of these areas returns the maintenance of the 1997 8-hour ozone standard. Please see section (d) Contingency Plan, below, for additional information related to the contingency measures.

b. Maintenance Demonstration. The primary purpose of a maintenance plan is to demonstrate how an area will continue to remain in compliance with the 1997 8-hour ozone standard for the 10 year period following the effective date of designation as unclassifiable/attainment. The end projection year for the maintenance plans for the portion of Greenup County in the Huntington-Ashland Area, Lexington Area and Edmonson County was 2020. As discussed in section (a) Attainment Inventory above, Kentucky identified the level of ozone-forming emissions that were consistent with attainment of the NAAQS for ozone in 2002. Kentucky projected VOC and NO_X emissions for the years 2005, 2008, 2011, 2014, 2017 and 2020 in the Huntington-Ashland Area, the Lexington Area and Edmonson County; and EPA finds that the future emissions levels in those years are expected to be similar or below the emissions levels in 2002.

Kentucky's SIP revisions also rely on a combination of several air quality measures that will provide for additional 8-hour ozone emissions reductions in the Huntington-Ashland Area, Lexington Area, and Edmonson County. These measures include the potential implementation of the following, among others: (1) Federal motor vehicle control program; (2) fleet turnover of automobiles; (3) federal reformulated gasoline; (4) tier 2 motor vehicle emissions and fuel standards; (5) heavy-duty gasoline and diesel highway vehicles standard; (6) large nonroad diesel engines rule; (7) nonroad spark ignition engines and recreational engines standard; (8) point source emission reductions; (9) reasonably available control measures (RACM); (10) maximum available control technology (MACT); (11) NO_X SIP Call; (12) Clean Air Interstate Rule (CAIR) [3], (13) several control programs to reduce area source emissions from aerosol coatings, architectural and industrial maintenance coatings, and commercial/consumer products and (14) emissions standards for small and large spark-ignition engines, locomotives and land based diesel engines.

c. Ambient Air Quality Monitoring. The Table below shows design values for the Huntington-Ashland Area, Lexington Area and Edmonson County. The ambient ozone monitoring data was collected at sites that were selected with assistance from the EPA and are considered to be representative of the area of highest concentration.

With regard to the monitors, there is a monitor in Greenup County. The Lexington area has two monitors in Fayette County (Ironworks and Newton) and one in Scott County; however, the Scott County monitor was discontinued in 2002. Edmonson County has one monitor. There were no design values exceeding the 1997 0.08 ppm standard and it is anticipated that the monitors will remain at current locations, unless otherwise allowed to be removed in the consultation with the EPA and in accordance with the 40 CFR part 58.

TABLE 4—DESIGN VALUES FOR 8-HOUR OZONE (PPM)

Year	Huntington-Ashland Area	Lexington Area		Edmonson County
		Fayette County	Scott County	
2000–2002	0.083	0.078	0.071	0.084
2001–2003	0.083	0.076	0.069	0.080
2002–2004	0.078	0.071	0.067	0.077
2003–2005	0.076	0.069	*	0.073
2004–2006	0.076	0.059	*	0.072
2006–2007	0.078	0.067	*	0.076

* Monitor discontinued in 2005.

Based on the Table above, each of the available design values indentified is considered to be in attainment of the 1997 ozone NAAQS and demonstrates that the Kentucky areas subject to this action are expected to continue attainment of the 1997 ozone NAAQS. In the event that a design value at one of the Kentucky area monitoring sites exceeds the 1997 ozone standard of 84 parts per billion, the Contingency Plan included in the Kentucky's maintenance plan submittal includes contingency measures which will be promptly implemented in section (d) Contingency Plan, below.

d. Contingency Plan. The section 110(a)(1) maintenance plans include contingency provisions to promptly correct any violation of the 1997 ozone NAAQS that occurs. The contingency indicator for the Huntington-Ashland Area, Lexington Area and Edmonson County, maintenance plans is based on updates to the emission inventories. The triggering mechanism for activation of contingency measures is a ten percent or greater increase in emissions of either VOC or NO_X based on the 2002 emissions inventory. In these maintenance plans, if contingency measures are triggered, Kentucky is committing to implement the measures as expeditiously as practicable, but no longer than nine months following the trigger. Some of the contingency measures include: (1) Implementation of a program to require additional emissions reductions on stationary sources; (2) requirement of stage I vapor recovery; (3) requirement of stage II vapor recovery; (4) further restrictions on open burning during summer ozone season; (5) restriction of certain roads or lanes to, or construction of such roads or lanes for use by, passenger buses or high-occupancy vehicles; (6) trip-reduction ordinances; (7) employer based transportation management plans, including incentives; (8) programs to limit or restrict vehicle use in downtown areas, or other areas of emissions concentration particularly during periods of peak use; and (9) programs for new construction and major reconstructions of paths or tracks for use by pedestrians or by non-motorized vehicles when economically feasible and in the public interest.

[3] Despite the legal status of CAIR as remanded, many facilities have already or are continuing with plans to install emission controls that may benefit Kentucky areas.

These contingency measures and schedules for implementation satisfy EPA's guidance on the requirements of section 110(a)(1) of continued attainment. Continued attainment of the 1997 8-hour ozone NAAQS in the partial area of Greenup County in Huntington-Ashland Area, Lexington Area and Edmonson County will depend, in part, on the air quality measures discussed previously (*see* section II). In addition, Kentucky commits to verifying the 1997 8-hour ozone status in each maintenance plan through annual and periodic evaluations of the emissions inventories. In the annual evaluations, Kentucky will review VOC and NO_X emission data from stationary point sources. During the periodic evaluations (every three years), Kentucky will update the emissions inventory for all emissions source categories, and compare the updated emissions inventory data to the projected 2005, 2008, 2011, 2014, 2017 and 2020 attainment emissions inventories to verify continued attainment of the 8-hour ozone standard.

III. Final Action

Pursuant to section 110 of the Act, EPA is approving the maintenance plans addressing the 1997 8-hour ozone standard for a portion of Greenup County in the Huntington-Ashland Area, the Lexington Area, and Edmonson County, which were submitted by Kentucky on May 27, 2008, and ensure continued attainment of the 1997 8-hour ozone NAAQS through the year 2020. EPA has evaluated the Commonwealth's submittals and has determined that they meet the applicable requirements of the CAA and EPA regulations, and are consistent with EPA policy.

EPA is publishing this rule without prior proposal because the Agency views this as a non-controversial revision and anticipates no adverse comments. However, in the proposed rules section of this **Federal Register** publication, EPA is publishing a separate document that will serve as the proposal to approve the SIP revision should adverse comment be filed. This rule will be effective on *May 26, 2009* without further notice unless the Agency receives adverse comment by *April 24, 2009.* If EPA receives such comments, then EPA will publish a document withdrawing the final rule and informing the public that the rule will not take effect. All public comments received will then be addressed in a subsequent final rule based on the proposed rule. EPA will not institute a second comment period on this action. Any parties interested in commenting must do so at this time. If no such comments are received, the public is advised this rule will be effective on *May 26, 2009* and no further action will be taken on the proposed rule.

IV. Statutory and Executive Order Reviews

Under the CAA, the Administrator is required to approve a SIP submission that complies with the provisions of the Act and applicable Federal regulations. 42 U.S.C. 7410(k); 40 CFR 52.02(a). Thus, in reviewing SIP submissions, EPA's role is to approve state choices, provided that they meet the criteria of the CAA. Accordingly, this action merely approves Kentucky law as meeting Federal requirements and does not impose additional requirements beyond those imposed by state law. For that reason, this action:

- Is not a ''significant regulatory action'' subject to review by the Office of Management and Budget under Executive Order 12866 (58 FR 51735, October 4, 1993);
- Does not impose an information collection burden under the provisions of the Paperwork Reduction Act (44 U.S.C. 3501 *et seq.*);
- Is certified as not having a significant economic impact on a substantial number of small entities under the Regulatory Flexibility Act (5 U.S.C. 601 *et seq.*);
- Does not contain any unfunded mandate or significantly or uniquely affect small governments, as described in the Unfunded Mandates Reform Act of 1995 (Pub. L. 104–4);
- Does not have Federalism implications as specified in Executive Order 13132 (64 FR 43255, August 10, 1999);
- Is not an economically significant regulatory action based on health or safety risks subject to Executive Order 13045 (62 FR 19885, April 23, 1997);
- Is not a significant regulatory action subject to Executive Order 13211 (66 FR 28355, May 22, 2001);
- Is not subject to requirements of Section 12(d) of the National Technology Transfer and Advancement Act of 1995 (15 U.S.C. 272 note) because application of those requirements would be inconsistent with the CAA; and
- Does not provide EPA with the discretionary authority to address, as appropriate, disproportionate human health or environmental effects, using practicable and legally permissible methods, under Executive Order 12898 (59 FR 7629, February 16, 1994).

In addition, this rule does not have tribal implications as specified by Executive Order 13175 (65 FR 67249, November 9, 2000), because the SIP is not approved to apply in Indian country located in the state, and EPA notes that it will not impose substantial direct costs on tribal governments or preempt tribal law.

The Congressional Review Act, 5 U.S.C. 801 *et seq.*, as added by the Small Business Regulatory Enforcement Fairness Act of 1996, generally provides that before a rule may take effect, the agency promulgating the rule must submit a rule report, which includes a copy of the rule, to each House of the Congress and to the Comptroller General of the United States. EPA will submit a report containing this action and other required information to the U.S. Senate, the U.S. House of Representatives, and the Comptroller General of the United States prior to publication of the rule in the **Federal Register**. A major rule cannot take effect until 60 days after it is published in the **Federal Register**. This action is not a ''major rule'' as defined by 5 U.S.C. 804(2).

Under section 307(b)(1) of the CAA, petitions for judicial review of this action must be filed in the United States Court of Appeals for the appropriate circuit by May 26, 2009. Filing a petition for reconsideration by the Administrator of this final rule does not affect the finality of this action for the purposes of judicial review nor does it extend the time within which a petition for judicial review may be filed, and shall not postpone the effectiveness of such rule or action. Parties with objections to this direct final rule are encouraged to file a comment in response to the parallel notice of proposed rulemaking for this action published in the proposed rules section of today's **Federal Register**, rather than file an immediate petition for judicial review of this direct final rule, so that EPA can withdraw this direct final rule and address the comment in the proposed rulemaking. This action may not be challenged later in proceedings to enforce its requirements. (*See* section 307(b)(2).)

List of Subjects in 40 CFR Part 52

Environmental protection, Air pollution control, Intergovernmental relations, Incorporation by reference, Ozone, Nitrogen Dioxides, Reporting and recordkeeping requirements, Volatile organic compounds.

Dated: February 25, 2009.

Beverly H. Banister,

Acting Regional Administrator, Region 4.

■ 40 CFR part 52 is amended as follows:

PART 52—[AMENDED]

■ 1. The authority citation for part 52 continues to read as follows:

Authority: 42 U.S.C. 7401 *et seq.*

Subpart S—Kentucky

■ 2. Section 52.920(e), is amended by adding new entries at the end of the table for ''Huntington-Ashland 8-Hour Ozone Section 110(a)(1) Maintenance Plan for the 1997 8-hour ozone standard'', ''Lexington Section 110(a)(1) Maintenance Plan for the 1997 8-hour ozone standard'', and ''Edmonson County Section 110(a)(1) Maintenance Plan for the 1997 8-hour ozone standard'' to read as follows:

§ 52.920 Identification of plan.

* * * * *

(e) * * *

EPA—APPROVED KENTUCKY NON-REGULATORY PROVISIONS

Name of SIP provision	Applicable geographic or nonattainment area	State submittal date/effective date	EPA approval date	Explanations
*	*	*	*	
Huntington—Ashland Section 110(a)(1) Maintenance Plan for the 1997 8–Hour Ozone Standard.	A portion of Greenup County.	5/27/2008	3/25/2008 [Insert citation of publication].	
Lexington Section 110(a)(1) Maintenance Plan for the 1997 8–Hour Ozone Standard.	Fayette and Scott Counties.	5/27/2008	3/25/2008 [Insert citation of publication].	
Edmonson County Section 110(a)(1) Maintenance Plan for 1997 8–Hour Ozone Standard.	Edmonson County	5/27/2008	3/25/2008 [Insert citation of publication].	

[FR Doc. E9–6601 Filed 3–24–09; 8:45 am]
BILLING CODE 6560–50–P

ENVIRONMENTAL PROTECTION AGENCY

40 CFR Part 52

[EPA–R03–OAR–2009–0093; FRL–8779–8]

Approval and Promulgation of Air Quality Implementation Plans; Virginia; Volatile Organic Compound Reasonably Available Control Technology for Reynolds Consumer Products Company

AGENCY: Environmental Protection Agency (EPA).

ACTION: Direct final rule.

SUMMARY: EPA is taking direct final action to approve revisions to the Commonwealth of Virginia's State Implementation Plan (SIP). This revision pertains to a State operating permit containing terms and conditions for the control of emissions of volatile organic compounds (VOCs) from Reynolds Consumer Products Company located in Richmond, Virginia. The submittal is for the purpose of meeting the requirements for reasonably available control technology (RACT) in order to implement the maintenance plan for the Richmond 8-hour ozone maintenance area. EPA is approving the revision to the Virginia SIP in accordance with the requirements of the Clean Air Act (CAA).

DATES: This rule is effective on May 26, 2009 without further notice, unless EPA receives adverse written comment by April 24, 2009. If EPA receives such comments, it will publish a timely withdrawal of the direct final rule in the **Federal Register** and inform the public that the rule will not take effect.

ADDRESSES: Submit your comments, identified by Docket ID Number EPA–R03–OAR–2009–0093 by one of the following methods:

A. *http://www.regulations.gov.* Follow the on-line instructions for submitting comments.

B. E-mail: fernandez.cristina@epa.gov.

C. *Mail:* EPA–R03–OAR–2009–0093, Cristina Fernandez, Chief, Air Quality Planning, Mailcode 3AP21, U.S. Environmental Protection Agency, Region III, 1650 Arch Street, Philadelphia, Pennsylvania 19103.

D. *Hand Delivery:* At the previously-listed EPA Region III address. Such deliveries are only accepted during the Docket's normal hours of operation, and special arrangements should be made for deliveries of boxed information.

Instructions: Direct your comments to Docket ID No. EPA–R03–OAR–2009–0093. EPA's policy is that all comments received will be included in the public docket without change, and may be made available online at *http://www.regulations.gov,* including any personal information provided, unless the comment includes information claimed to be Confidential Business Information (CBI) or other information whose disclosure is restricted by statute. Do not submit information that you consider to be CBI or otherwise protected through *http://www.regulations.gov* or e-mail. The *http://www.regulations.gov* Web site is an ''anonymous access'' system, which means EPA will not know your identity or contact information unless you provide it in the body of your comment. If you send an e-mail comment directly to EPA without going through *http://www.regulations.gov,* your e-mail address will be automatically captured and included as part of the comment that is placed in the public docket and made available on the Internet. If you submit an electronic comment, EPA recommends that you include your name and other contact information in the body of your comment and with any disk or CD–ROM you submit. If EPA cannot read your comment due to technical difficulties and cannot contact you for clarification, EPA may not be able to consider your comment. Electronic files should avoid the use of special characters, any form of encryption, and be free of any defects or viruses.

Docket: All documents in the electronic docket are listed in the *http://www.regulations.gov* index. Although listed in the index, some information is not publicly available, *i.e.*, CBI or other information whose disclosure is restricted by statute. Certain other material, such as copyrighted material, is not placed on the Internet and will be publicly available only in hard copy form. Publicly available docket materials are available either electronically in *http://www.regulations.gov* or in hard copy during normal business hours at the Air

Protection Division, U.S. Environmental Protection Agency, Region III, 1650 Arch Street, Philadelphia, Pennsylvania 19103. Copies of the State submittal are available at the Virginia Department of Environmental Quality, 629 East Main Street, Richmond, Virginia, 23219.

FOR FURTHER INFORMATION CONTACT: Irene Shandruk, (215) 814–2166, or by e-mail at *shandruk.irene@epa.gov.*

SUPPLEMENTARY INFORMATION:

I. Background

RACT is the lowest emission limit that a particular source is capable of meeting by the application of control technology that is reasonably available with the consideration of technological and economic feasibility. *See, e.g.*, 72 FR 20586 at 20610 (April 25, 2007). When the Richmond area was originally designated as an ozone nonattainment area under the 1-hour standard, it was classified as moderate and thereby had to meet the non-CTG RACT requirements of section 182 of the CAA. As part of the 1-hour ozone attainment plan, one of the sources located in the area identified as being subject to non-CTG RACT was Reynolds Metals Company. The company's Richmond Foil Plant produces aluminum foil by rolling aluminum into very thin sheets. VOC emissions at this plant come from lubricants used on 16 foil rolling mills.

The Reynolds Consumer Products Company located in Richmond, Virginia underwent RACT analysis, and a consent order was issued to the facility on December 18, 1987. The order was then submitted to EPA as a SIP revision, and approved into the Commonwealth's SIP on August 20, 1990 (55 FR 33904).

On September 22, 2004, under the new 8-hour ozone standard, the Richmond area was classified as a marginal nonattainment area. On September 20, 2006, the Virginia Department of Environmental Quality (VADEQ) formally submitted a request to redesignate the Richmond area from nonattainment to attainment for the 8-hour ozone NAAQS. On September 25, 2006, the VADEQ submitted a maintenance plan for the Richmond area as a SIP revision to ensure continued attainment. The redesignation request and maintenance plan were approved on June 1, 2007 (72 FR 30485). Section 107(d)(3)(E) of the CAA stipulates that for an area to be redesignated, EPA must approve a maintenance plan that meets the requirements of Section 175A. All applicable nonattainment area requirements remain in place. The plan includes a demonstration that emissions will remain within the 2005 levels for a 10-year period by keeping in place key elements of the current federal and state regulatory programs, including case-by-case RACT requirements for the area. Because the Richmond area in which this facility is located has continuously been classified as either a nonattainment or a maintenance area, the RACT requirements remain in effect and a change to the facility's RACT requirements necessitates a change to the SIP.

II. Summary of SIP Revision

On October 20, 2008, the Commonwealth of Virginia submitted a formal revision to its SIP. The SIP revision consists of a State operating permit containing terms and conditions for the control of emissions of VOCs from Reynolds Consumer Products Company located in Richmond, Virginia. The submittal is for the purpose of meeting the requirements for RACT in order to implement the maintenance plan for the Richmond 8-hour ozone maintenance area.

Reynolds seeks the option of using less expensive and more readily available materials should the need arise due to recent costs and availability of the currently used material. A State operating permit, intended to replace the consent order for the facility, has been submitted to ensure compliance with the non-CTG RACT requirements.

III. General Information Pertaining to SIP Submittals From the Commonwealth of Virginia

In 1995, Virginia adopted legislation that provides, subject to certain conditions, for an environmental assessment (audit) ''privilege'' for voluntary compliance evaluations performed by a regulated entity. The legislation further addresses the relative burden of proof for parties either asserting the privilege or seeking disclosure of documents for which the privilege is claimed. Virginia's legislation also provides, subject to certain conditions, for a penalty waiver for violations of environmental laws when a regulated entity discovers such violations pursuant to a voluntary compliance evaluation and voluntarily discloses such violations to the Commonwealth and takes prompt and appropriate measures to remedy the violations. Virginia's Voluntary Environmental Assessment Privilege Law, Va. Code Sec. 10.1–1198, provides a privilege that protects from disclosure documents and information about the content of those documents that are the product of a voluntary environmental assessment. The Privilege Law does not extend to documents or information (1) that are generated or developed before the commencement of a voluntary environmental assessment; (2) that are prepared independently of the assessment process; (3) that demonstrate a clear, imminent and substantial danger to the public health or environment; or (4) that are required by law.

On January 12, 1998, the Commonwealth of Virginia Office of the Attorney General provided a legal opinion that states that the Privilege Law, Va. Code Sec. 10.1–1198, precludes granting a privilege to documents and information ''required by law,'' including documents and information ''required by Federal law to maintain program delegation, authorization or approval,'' since Virginia must ''enforce Federally authorized environmental programs in a manner that is no less stringent than their Federal counterparts * * *'' The opinion concludes that ''[r]egarding § 10.1–1198, therefore, documents or other information needed for civil or criminal enforcement under one of these programs could not be privileged because such documents and information are essential to pursuing enforcement in a manner required by Federal law to maintain program delegation, authorization or approval.''

Virginia's Immunity law, Va. Code Sec. 10.1–1199, provides that ''[t]o the extent consistent with requirements imposed by Federal law,'' any person making a voluntary disclosure of information to a state agency regarding a violation of an environmental statute, regulation, permit, or administrative order is granted immunity from administrative or civil penalty. The Attorney General's January 12, 1998 opinion states that the quoted language renders this statute inapplicable to enforcement of any Federally authorized programs, since ''no immunity could be afforded from administrative, civil, or criminal penalties because granting such immunity would not be consistent with Federal law, which is one of the criteria for immunity.''

Therefore, EPA has determined that Virginia's Privilege and Immunity statutes will not preclude the Commonwealth from enforcing its program consistent with the Federal requirements. In any event, because EPA has also determined that a state audit privilege and immunity law can affect only state enforcement and cannot have any impact on Federal enforcement authorities, EPA may at any time invoke its authority under the CAA, including, for example, sections 113, 167, 205, 211 or 213, to enforce the requirements or prohibitions of the state

plan, independently of any state enforcement effort. In addition, citizen enforcement under section 304 of the CAA is likewise unaffected by this, or any, state audit privilege or immunity law.

IV. Final Action

EPA is approving Virginia's Reynolds Consumer Products Company State operating permit SIP revision for the purpose of meeting the requirements for RACT in order to implement the maintenance plan for the Richmond 8-hour ozone maintenance area.

EPA is publishing this rule without prior proposal because the Agency views this as a noncontroversial amendment and anticipates no adverse comment. However, in the ''Proposed Rules'' section of today's **Federal Register**, EPA is publishing a separate document that will serve as the proposal to approve the SIP revision if adverse comments are filed. This rule will be effective on May 26, 2009 without further notice unless EPA receives adverse comment by April 24, 2009. If EPA receives adverse comment, EPA will publish a timely withdrawal in the **Federal Register** informing the public that the rule will not take effect. EPA will address all public comments in a subsequent final rule based on the proposed rule. EPA will not institute a second comment period on this action. Any parties interested in commenting must do so at this time.

V. Statutory and Executive Order Reviews

A. General Requirements

Under the Clean Air Act, the Administrator is required to approve a SIP submission that complies with the provisions of the Act and applicable Federal regulations 42 U.S.C. 7410(k); 40 CFR 52.02(a). Thus, in reviewing SIP submissions, EPA's role is to approve state choices, provided that they meet the criteria of the Clean Air Act. Accordingly, this action merely approves state law as meeting Federal requirements and does not impose additional requirements beyond those imposed by state law. For that reason, this action:

- Is not a ''significant regulatory action'' subject to review by the Office of Management and Budget under Executive Order 12866 (58 FR 51735, October 4, 1993);
- Does not impose an information collection burden under the provisions of the Paperwork Reduction Act (44 U.S.C. 3501 *et seq.*);
- Is certified as not having a significant economic impact on a substantial number of small entities under the Regulatory Flexibility Act (5 U.S.C. 601 *et seq.*);
- Does not contain any unfunded mandate or significantly or uniquely affect small governments, as described in the Unfunded Mandates Reform Act of 1995 (Pub. L. 104–4);
- Does not have Federalism implications as specified in Executive Order 13132 (64 FR 43255, August 10, 1999);
- Is not an economically significant regulatory action based on health or safety risks subject to Executive Order 13045 (62 FR 19885, April 23, 1997);
- Is not a significant regulatory action subject to Executive Order 13211 (66 FR 28355, May 22, 2001);
- Is not subject to requirements of Section 12(d) of the National Technology Transfer and Advancement Act of 1995 (15 U.S.C. 272 note) because application of those requirements would be inconsistent with the Clean Air Act; and
- Does not provide EPA with the discretionary authority to address, as appropriate, disproportionate human health or environmental effects, using practicable and legally permissible methods, under Executive Order 12898 (59 FR 7629, February 16, 1994).

In addition, this rule does not have tribal implications as specified by Executive Order 13175 (65 FR 67249, November 9, 2000), because the SIP is not approved to apply in Indian country located in the state, and EPA notes that it will not impose substantial direct costs on tribal governments or preempt tribal law.

B. Submission to Congress and the Comptroller General

The Congressional Review Act, 5 U.S.C. 801 *et seq.*, as added by the Small Business Regulatory Enforcement Fairness Act of 1996, generally provides that before a rule may take effect, the agency promulgating the rule must submit a rule report, which includes a copy of the rule, to each House of the Congress and to the Comptroller General of the United States. EPA will submit a report containing this action and other required information to the U.S. Senate, the U.S. House of Representatives, and the Comptroller General of the United States prior to publication of the rule in the **Federal Register**. A major rule cannot take effect until 60 days after it is published in the **Federal Register**. This action is not a ''major rule'' as defined by 5 U.S.C. 804(2).

C. Petitions for Judicial Review

Under section 307(b)(1) of the Clean Air Act, petitions for judicial review of this action must be filed in the United States Court of Appeals for the appropriate circuit by May 26, 2009. Filing a petition for reconsideration by the Administrator of this final rule does not affect the finality of this action for the purposes of judicial review nor does it extend the time within which a petition for judicial review may be filed, and shall not postpone the effectiveness of such rule or action. Parties with objections to this direct final rule are encouraged to file a comment in response to the parallel notice of proposed rulemaking for this action published in the proposed rules section of today's **Federal Register**, rather than file an immediate petition for judicial review of this direct final rule, so that EPA can withdraw this direct final rule and address the comment in the proposed rulemaking.

This action approving Virginia's SIP revision pertaining to a State operating permit containing terms and conditions for the control of emissions of VOCs from the Reynolds Consumer Products Company may not be challenged later in proceedings to enforce its requirements. (See section 307(b)(2).)

List of Subjects in 40 CFR Part 52

Environmental protection, Air pollution control, Incorporation by reference, Ozone, Reporting and recordkeeping requirements, Volatile organic compounds.

Dated: February 24, 2009.

William T. Wisniewski,

Acting Regional Administrator, Region III.

■ 40 CFR Part 52 is amended as follows:

PART 52—[AMENDED]

■ 1. The authority citation for 40 CFR part 52 continues to read as follows:

Authority: 42 U.S.C. 7401 *et seq.*

Subpart VV—Virginia

■ 2. In § 52.2420, the table in paragraph (d) is amended by adding the entry for Reynolds Consumer Products Company at the end of the table to read as follows:

§ 52.2420 Identification of plan.

* * * * *

(d) * * *

EPA-APPROVED SOURCE-SPECIFIC REQUIREMENTS

Source name	Permit/order or registration number	State effective date	EPA approval date	40 CFR part 52 citation
*	*	*	*	*
Reynolds Consumer Products Company.	Registration No. 50534	10/1/08	03/25/09 [Insert page number where the document begins].	52.2420(d)(12)

* * * * *

[FR Doc. E9–6663 Filed 3–24–09; 8:45 am]

BILLING CODE 6560–50–P

ENVIRONMENTAL PROTECTION AGENCY

40 CFR Parts 60 and 63

[EPA–HQ–OAR–2003–0074; FRL–8785–4]

RIN 2060–AG21

Performance Specification 16 for Predictive Emissions Monitoring Systems and Amendments to Testing and Monitoring Provisions

AGENCY: Environmental Protection Agency (EPA).

ACTION: Final rule.

SUMMARY: EPA is taking final action to promulgate Performance Specification (PS) 16 for predictive emissions monitoring systems (PEMS). Performance Specification 16 provides testing requirements for assessing the acceptability of PEMS when they are initially installed. Currently, there are no Federal rules requiring the use of PEMS; however, some sources have obtained Administrator approval to use PEMS as alternatives to continuous emissions monitoring systems (CEMS). Other sources may desire to use PEMS in cases where initial and operational costs are less than CEMS and process optimization for emissions control may be desirable. Performance Specification 16 will apply to any PEMS required in future rules in 40 CFR Parts 60, 61, or 63, and in cases where a source petitions the Administrator and receives approval to use a PEMS in lieu of another emissions monitoring system required under the regulation. We are also finalizing minor technical amendments.

DATES: This final rule is effective on April 24, 2009.

ADDRESSES: EPA has established a docket for this action under Docket ID No. EPA–HQ–OAR–2003–0074. All documents in the docket are listed on the *http://www.regulations.gov* Web site. Although listed in the index, some information is not publicly available, e.g., CBI or other information whose disclosure is restricted by statute. Certain other material, such as copyrighted material, is not placed on the Internet and will be publicly available only in hard copy form. Publicly available docket materials are available either electronically through *http://www.regulations.gov* or in hard copy at the Performance Specification 16 for Predictive Emission Monitoring Systems Docket, Docket ID No. EPA–OAR–2003–0074, EPA Docket Center, EPA/DC, EPA West, Room 3334, 1301 Constitution Ave., NW., Washington, DC. This Docket Facility is open from 8:30 a.m. to 4:30 p.m. Monday through Friday excluding legal holidays. The docket telephone number is (202) 566–1742. The Public Reading Room is open from 8:30 a.m. to 4:30 p.m., Monday through Friday, excluding legal holidays. The telephone number for the Public Reading Room is (202) 566–1744.

FOR FURTHER INFORMATION CONTACT: Mr. Foston Curtis, Air Quality Assessment Division, Office of Air Quality Planning and Standards (E143–02), Environmental Protection Agency, Research Triangle Park, North Carolina 27711; telephone number (919) 541–1063; fax number (919) 541–0516; e-mail address: *curtis.foston@epa.gov.*

SUPPLEMENTARY INFORMATION:

Table of Contents

I. Does This Action Apply to Me?
II. Where Can I Obtain a Copy of This Action?
III. Background
IV. This Action
A. PS–16
B. Method 24 of Appendix A–7 of Part 60
C. Performance Specification 11 of Appendix B of Part 60
D. Procedures 1 and 2 of Appendix F of Part 60
E. Method 303 of Appendix A of Part 63
V. Public Comments on the Proposed Rule
A. Parameter Operating Level Terminology
B. PS–16 Applicability to Market-Based Programs
C. PS–16 and the Older Draft Performance Specifications on the EPA Web site
D. PEMS Relative Accuracy Stringency vs CEMS Stringency
E. Alternative Limits for Low Emitters
F. Statistical Tests
G. Use of Portable Analyzers for the Relative Accuracy Audit
H. Potential Overlap Between PS–16 and PS–17
I. Reduced Relative Accuracy Audit Frequency for Good Performance
VI. Judicial Review
VII. Statutory and Executive Order Reviews
A. Executive Order 12866: Regulatory Planning and Review
B. Paperwork Reduction Act
C. Regulatory Flexibility Act
D. Unfunded Mandates Reform Act
E. Executive Order 13132: Federalism
F. Executive Order 13175: Consultation and Coordination with Indian Tribal Governments
G. Executive Order 13045: Protection of Children from Environmental Health Risks and Safety Risks
H. Executive Order 13211: Actions that Significantly Affect Energy Supply, Distribution, or Use
I. National Technology Transfer and Advancement Act
J. Executive Order 12898: Federal Actions to Address Environmental Justice in Minority Populations and Low-Income Populations
K. Congressional Review Act

I. Does This Action Apply to Me?

Predictive emission monitoring systems are not currently required in any Federal rule. However, they may be used under certain New Source Performance Standards (NSPS) to predict nitrogen oxides emissions from small industrial, commercial, and institutional steam generating units. In some cases, PEMS have been approved as alternatives to CEMS for the initial 30-day compliance test at these facilities. Various State and Local regulations are incorporating PEMS as an emissions monitoring tool. The major entities that are potentially affected by Performance Specification 16 and the amendments to the subparts are included in the following tables. Performance Specification 16 will neither apply to existing PEMS nor those covered under Subpart E of 40 CFR part 75.

Regulated Entities. Categories and entities potentially affected include the following:

TABLE 1—MAJOR ENTITIES POTENTIALLY AFFECTED BY THIS ACTION: PERFORMANCE SPECIFICATION 16

Category	NAICS[a]	Examples of regulated entities
Industry	333611	Stationary Gas Turbines.
Industry	332410	Industrial, Commercial, Institutional Steam Generating Units.

[a] North American Industry classification system.

TABLE 2—MAJOR ENTITIES POTENTIALLY AFFECTED BY THIS ACTION: AMENDMENTS TO PERFORMANCE SPECIFICATION 11 AND PROCEDURES 1 AND 2, APPENDIX F, PART 60

Category	NAICS[a]	Examples of regulated entities
Industry	333298	Portland Cement Manufacturing.
Industry	562211	Hazardous Waste Incinerators.

[a] North American Industry Classsification System.

TABLE 3—MAJOR ENTITIES POTENTIALLY AFFECTED BY THIS ACTION: AMENDMENTS TO METHOD 24, APPENDIX A, PART 60

Category	NAICS[a]	Examples of regulated entities
Industry	326211	Rubber Tire Manufacturing.
Industry	323111	Flexible Vinyl and Urethane Coating and Printing.
Industry	334613	Magnetic Tape Coating Facilities.
Industry	326199	Surface Coating of Plastic Parts for Business Machines.
Industry	332812	Polymeric Coating of Supporting Substrates Facilities.
Industry	337124	Surface Coating of Metal Furniture.
Industry	336111	Automobile and Light Duty Truck Surface Coating.
Industry	323111	Graphic Arts Industry: Publication Rotogravure Printing.
Industry	322222	Pressure Sensitive Tape and Label Surface Coating Operations.
Industry	421620	Industrial Surface Coating: Large Appliances.
Industry	335931	Metal Coil Surface Coating.
Industry	332812	Beverage Can Surface Coating.
Industry	33641	Aerospace.
Industry	.....	Boat and Ship Manufacturing and Repair Surface Coating.
Industry	.....	Fabric Printing, Coating, and Dyeing.
Industry	.....	Leather Finishing.
Industry	.....	Miscellaneous Coating Manufacturing.
Industry	.....	Miscellaneous Metal Parts and Products.
Industry	.....	Paper and Other Web Surface Coating.
Industry	.....	Plastic Parts Surface Coating.
Industry	.....	Printing and Publishing Surface Coating.
Industry	.....	Wood Building Products.
Industry	.....	Wood Furniture.

[a] North American Industry classificatiion System.

TABLE 4—MAJOR ENTITIES POTENTIALLY AFFECTED BY THIS ACTION: AMENDMENT TO METHOD 303, APPENDIX A, PART 63

Category	NAICS[a]	Examples of regulated entities
Industry	33111111	Coke Ovens.

[a] North American Industry classsification System.

These tables are not intended to be exhaustive, but rather to provide a guide for readers regarding entities likely to be affected by these actions. These tables list examples of the types of entities EPA is now aware could potentially be affected by these final actions. Other types of entities not listed could also be affected. If you have any questions regarding the applicability of this action to a particular entity, consult the person listed in the preceding **FOR FURTHER INFORMATION CONTACT** section.

II. Where Can I Obtain a Copy of This Action?

In addition to being available in the docket, an electronic copy of this rule will also be available on the Worldwide Web (www) through the Technology Transfer Network (TTN). Following the Administrator's signature, a copy of the final rule will be placed on the TTN's policy and guidance page for newly proposed or promulgated rules at *http://www.epa.gov/ttn/oarpg*. The TTN provides information and technology exchange in various areas of air pollution control.

III. Background

Performance Specification 16 and the amendments to PS–11, Procedures 1 and 2, Method 24, and Method 303 were proposed in the **Federal Register** on August 8, 2005 with a public comment period that ended October 7, 2005. A public commenter asked that the comment period be reopened to allow for additional time to prepare their response since they were a leading vendor of PEMS and were significantly impacted by the rule. We reopened the comment period for two weeks, from November 2–16, 2005. A total of 42 comment letters were received on the proposed rule. Most comment letters pertained to PS–16 and contained multiple comments. We have compiled and responded to the public comments and made appropriate changes to the rule based on the comments.

IV. This Action

A. PS–16

This action finalizes PS–16 for PEMS. This performance specification was originally proposed by EPA on August 8, 2005 (70 FR 45608). Performance Specification 16 establishes procedures that must be used to determine whether a PEMS is acceptable for use in demonstrating compliance with applicable requirements. Predictive emission monitoring systems predict source emissions indirectly using process parameters instead of measuring them directly.

Additionally, the following amendments are made to the noted testing and monitoring provisions.

B. Method 24 of Appendix A–7 of Part 60

Method 24, part 60, Appendix A–7 is used to determine the contents and properties of surface coatings under NSPS applications. Method 24 currently references ASTM D2369 as the method for determining volatiles content. The American Society for Testing and Materials has recommended that ASTM D6419 be allowed as an alternative to D2369 in this case. We have amended Method 24 to cite this optional method.

C. Performance Specification 11 of Appendix B of Part 60

The publication on January 12, 2004 of PS–11 for Appendix B and Procedure 2 for part 60, Appendix F contained technical and typographical errors and unclear instructions. We have revised the definition of confidence interval half range to clarify the language, replacing the word ''pairs'' with ''sets'' to avoid possible confusion regarding the use of paired sampling trains, corrected errors in Equations 11–22, 11–27, and 11–37, corrected the procedures in paragraphs (4) and (5) of section 12.3 for determining confidence and tolerance interval half ranges for the exponential and power correlation models, and added a note following paragraph (5)(v) concerning the application of correlation equations to calculate particulate matter (PM) concentrations using the response data from an operating PM CEMS. We have also renumbered some equations and references for clarification, consistency, and accuracy.

D. Procedures 1 and 2 of Appendix F of Part 60

In Procedure 1 of Appendix F of part 60, we revised obsolete language that describes the standard reference material that is required, and in Procedure 2, we added a needed equation for calculating an absolute correlation audit based on the applicable standard.

E. Method 303 of Appendix A of Part 63

In Method 303 of Appendix A to part 63, a statement on varying the time of day runs are taken that was deleted by mistake in a recent amendment of the method has been added.

V. Public Comments on the Proposed Rule

A more detailed summary of the public comments and our responses can be found in the Summary of Public Comments and Responses document, which is available from several sources (see **ADDRESSES** section). The major public comments are summarized by subject as follows:

A. Parameter Operating Level Terminology

Several commenters suggested we revise the key parameter operating level used for the relative accuracy (RA) test from ''normal'' to ''mid.'' It was noted that some units normally operate in the high or low levels and that a revised listing of mid level would ensure that the intended three levels would be evaluated. We agree with the commenters and changed the reference from ''normal'' to ''mid.''

B. PS–16 Applicability to Market-Based Programs

Several commenters objected to applying PS–16 to PEMS that are used in a market-based program. They noted that market-based PEMS are already covered in Subpart E of 40 CFR part 75 and those requirements are different from proposed PS–16. This was deemed confusing from an applicability standpoint, especially for those PEMS that have already been approved under part 75. Other commenters stated that they did not understand why performance specifications for market-based monitoring were being added to 40 CFR part 60 since part 60 does not address marketing regulations. Some commenters asked whether PS–16 would apply to PEMS already in use.

We have dropped the proposed applicability of PS–16 to market-based PEMS and agree that part 75 is the better place to address market-based PEMS. Requirements for PEMS used in the part 75 market-based program are already addressed in Subpart E of part 75, and we do not believe the more stringent requirements given there for market-based PEMS are warranted for compliance monitoring under 40 CFR parts 60, 61, and 63. We note in the final rule that PS–16 applies only to PEMS that are installed after the effective date of today's action and to those used to comply with requirements in 40 CFR parts 60, 61, or 63.

C. PS–16 and the Older Draft Performance Specifications on the EPA Web Site

A number of commenters asked that the draft ''Example Specifications and Test Procedures for Predictive Emission Monitoring Systems'' on the EPA Web site be adopted as PS–16 instead of the proposed provisions. They note that these specifications have been used in the past to approve prospective PEMS and felt the same guidelines should be used in the future. One commenter thought a departure from the draft requirements would result in a demise in PEMS use due to the increased costs of initial certification and ongoing maintenance.

The ''Example Specifications and Test Procedures for Predictive Emission Monitoring Systems'' was a guidance document to give PEMS users and regulators a general idea of what could be expected of PEMS in light of the limited performance data available at

that time. It was primarily based on the existing requirements in PS–2 for CEMS and not on extensive research. The document was offered on the EMC Web site until the Agency could develop and finalize PS–16. Since then, we have acquired relative accuracy test audit (RATA) data from a number of PEMS over time, and our understanding of their capabilities has increased. This data is presented in the docket and gives a better indication of PEMS performance than what is reflected in the guidance document (*see* EPA–OAR–2003–0074–0002, 0003, and 0004 docket entries). This data confirms that the performance levels set in PS–16 are achievable by the vast majority of PEMS in the data pool and are more reflective of the technology's capabilities. We disagree with the commenter that the new requirements in PS–16 will result in the demise of PEMS due to increased cost for initial certification and ongoing maintenance.

D. PEMS Relative Accuracy Stringency vs. CEMS Stringency

Some commenters objected to the 10 percent relative accuracy limit for PEMS in PS–16 considering that the corresponding performance specifications for CEMS that are used for the same purposes have a 20 percent relative accuracy limit. They note that previous approvals of PEMS were based on the 20 percent criterion in the draft Web site performance specifications. They also argued that the added stringency of having to certify at a level twice as accurate as a CEMS under the same compliance conditions was not warranted.

The 20 percent relative accuracy limit was set for CEMS in the 1970's and reflects the performance capabilities of systems at that time. State-of-the-art CEMS are capable of much better performance as can be seen by their success under the tighter part 75 rules where a 10 percent relative accuracy is required. We have obtained performance data on a number of installed PEMS currently in use (*see* EPA–HQ–OAR–2003–0074–0002, 0003, and 0004 docket entries), and the data show an overwhelming majority of the PEMS are capable of meeting a 10 percent criterion on a repeated basis. We believe the quality of emissions data should parallel the increased capabilities of newer technologies, not the capabilities of older, outdated systems. Therefore, the 10 percent relative accuracy limit for PEMS is retained in this final rule.

E. Alternative Limits for Low Emitters

Several commenters asked that alternative relative accuracy limits be allowed for low-emitting sources. They were concerned that the 10 percent relative accuracy limit would be problematic for low-emitters because the error in the reference method measurement plays a significant part in the accuracy determination at low concentrations. One commenter noted that many permits set emission limits just above the typical emission level of the source. This results in low-emitting sources running in the 75–95 percent of the emission standard range. The proposed alternative limits would only be of use when the unit is operating either below 25 or below 10 percent of the emission standard. They thought it would be more practical to base alternative criteria on the measured concentration ranges instead of the emission standard. Two commenters suggested scaling the relative accuracy requirement such that 10 percent would be the limit for measurements over 100 ppm, 20 percent for measurements between 10 and 100 ppm, and within 2 ppm for measurements under 10 ppm.

We understand the commenters' concerns and think their suggestion for alternative criteria for low emitters is a practical idea. We have added the suggested alternative criteria for concentrations between 10 and 100 ppm (20 percent RA) and below 10 ppm (± 2 ppm difference between PEMS and reference method).

F. Statistical Tests

One commenter thought the relative accuracy requirements are, in some cases, too severe and would prevent (1) even most CEMS from certifying using standard reference method testing and (2) all but the most sophisticated PEMS from passing certification. Two commenters proposed using daily zero and span calibration checks and quarterly linearity checks as alternatives to the statistical tests and quarterly relative accuracy audits (RAA). Others recommended longer sampling times to obtain the needed data for the relative accuracy statistical tests similar to the 40 CFR part 75, Subpart E requirements. Several commenters stated that they anticipated difficulty in meeting the 0.8 r-correlation requirement in tests where process variations are small. One commenter recommended the proposed waiver of the correlation test be made permanent if the data are determined to be either auto-correlated or if the signal-to-noise ratio of the data is less than 4.

We do not believe the relative accuracy requirements are so severe as to prevent most CEMS or PEMS from certifying using standard reference method testing. Most PEMS are not amenable to daily zero and span checks or quarterly linearity checks of their sensors. The suggested long-term relative accuracy evaluation of PEMS similar to the requirements of Subpart E of part 75 would render PEMS use economically impractical under parts 60, 61, and 63. Evaluation times similar to those currently required of CEMS should be sufficient. We have taken the recommendation that the correlation test be permanently waived in cases where the data are auto-correlated or have a signal-to-noise ratio less than 4 and have made this change in PS–16.

G. Use of Portable Analyzers for the Relative Accuracy Audit

Several commenters opposed the use of portable analyzers for the quarterly relative accuracy audits. They felt the analyzers lacked sufficient accuracy to evaluate PEMS. Two commenters cited the report *''Evaluation of Portable Analyzers for Use in Quality Assuring Predictive Emission Monitoring Systems for NO_X''* (a report prepared for EPA's Clean Air Markets Division, Washington, DC, September 8, 2004) as proof of this inadequacy. They note that in the report the only analyzer that achieved accuracy better than 10 percent was the more sophisticated analyzer using the reference method methodology. Additionally, a commenter suggested that sampling problems related to sampling point location, sample conditioning, high-moisture and volume, particulate, and high temperatures would render portable analyzers ineffective. Another commenter thought that portable analyzers, which were believed to be accurate to within 20 percent, would not be able to show that PEMS are accurate to within 10 percent.

Three commenters asked that the quarterly audit requirements be removed altogether. One commenter stated that he/she did not see any added value in the audits because PEMS were thought to be inherently reliable, and two commenters urged a return to the Web site performance specification requirement to conduct biannual relative accuracy test audits instead of quarterly relative accuracy audits.

We are not aware of and commenters did not present any data that supports the idea that PEMS are inherently accurate such that their performance is guaranteed over long periods of time. The performance of PEMS, like CEMS, depends on a number of criteria that are subject to change over time. The summary and findings of the noted

report on portable analyzers state that ''The portable analyzers produced results that were comparable to those of the CEMS and Method 7E for the two natural gas-fired combustion sources and low concentrations tested.'' Portable analyzers are offered as a cheaper testing option to add flexibility to the relative accuracy audits. However, reference methods may also be used in place of portable analyzers for the relative accuracy audit. A relative accuracy audit for a validated PEMS would not be valueless but would confirm that such a PEMS is still functioning properly. Therefore, quarterly relative accuracy audits are retained and may be performed using a portable analyzer or a reference method.

H. Potential Overlap Between PS–16 and PS–17

Three commenters asked that we specifically state that PS–16 will not apply to parametric monitoring systems. We were asked to clarify that PS–16 would not cover parametric systems that are already covered under PS–17.

Performance Specification 17 applies to parametric monitoring systems (*i.e.*, those that have associated parametric limits). Performance Specification 16 applies to predictive emission monitoring systems (*i.e.*, those that have associated emission limits). This difference has been noted in PS–16.

I. Reduced Relative Accuracy Audit Frequency for Good Performance

One commenter proposed that quarterly relative accuracy audit tests be required for the first year after initial certification. If all tests are passed through the second year relative accuracy test audit (without tuning or additional training), the second year of relative accuracy audits would be waived. In cases of failed relative accuracy audit or relative accuracy test audit attempts during the year or any PEMS retraining that triggers recertification would nullify this option until the subsequent year. The commenter felt this waiver option was important to the viability of PEMS use at remote sites.

We believe the commenter's suggestion has merit but think that at least a semiannual test at a time approximately one-half year from the previous RATA is needed to prevent extended malfunctions. We have therefore revised PS–16 to allow a single RAA or RATA midway the second year if three prior quarters of RAA and a second annual RATA are passed without PEMS training or tuning.

VI. Judicial Review

Under section 307(b)(1) of the Clean Air Act (CAA), judicial review of this final rule is available by filing a petition for review in the U.S. Court of Appeals for the District of Columbia Circuit by May 26, 2009. Under section 307(d)(7)(B) of the CAA, only an objection to this final rule that was raised with reasonable specificity during the period for public comment can be raised during judicial review. Moreover, under section 307(b)(2) of the CAA, the requirements established by this action may not be challenged separately in any civil or criminal proceedings brought by EPA to enforce these requirements.

VII. Statutory and Executive Order Reviews

A. Executive Order 12866: Regulatory Planning and Review

This action is not a ''significant regulatory action'' under the terms of Executive Order 12866 (58 FR 51735, October 4, 1993) and is, therefore, not subject to review under the Executive Order.

B. Paperwork Reduction Act

This action does not impose an information collection burden under the provisions of the *Paperwork Reduction Act,* 44 U.S.C. 3501 *et seq*. Burden is defined at 5 CFR 1320.3(b). This final rule does not add information collection requirements beyond those currently required under the applicable regulations. This final rule adds performance requirements and amends testing and monitoring requirements as necessary.

C. Regulatory Flexibility Act

The Regulatory Flexibility Act (RFA) generally requires an agency to prepare a regulatory flexibility analysis of any rule subject to notice and comment rulemaking requirements under the Administrative Procedure Act or any other statute unless the agency certifies that the rule will not have a significant economic impact on a substantial number of small entities. Small entities include small businesses, small organizations, and small governmental jurisdictions.

For purposes of assessing the impacts of this rule on small entities, small entity is defined as: (1) A small business whose parent company has fewer than 100 or 1,000 employees, or fewer than 4 billion kilowatt-hr per year of electricity usage, depending on the size definition for the affected North American Industry Classification System code; (2) a small governmental jurisdiction that is a government of a city, county, town, school district or special district with a population of less than 50,000; and (3) a small organization that is any not-for-profit enterprise which is independently owned and operated and is not dominant in its field.

After considering the economic impacts of this final rule on small entities, I certify that this action will not have a significant economic impact on a substantial number of small entities. This final rule will not impose any requirements on small entities because it does not impose any additional regulatory requirements.

D. Unfunded Mandates Reform Act

This action contains no Federal mandates under the provisions of Title II of the Unfunded Mandates Reform Act of 1995 (UMRA), 2 U.S.C. 1531–1538 for State, local, or tribal governments or the private sector. This action imposes no enforceable duty on any State, local or tribal governments of the private sector. Therefore, this action is not subject to the requirements of sections 202 or 205 of the UMRA. This action is also not subject to the requirements of section 203 of UMRA because it contains no regulatory requirements that might significantly or uniquely affect small governments. This action adds procedures that apply when applicable parties choose to use a different monitoring tool than what is currently required. Other amendments are made to correct various errors in testing provisions.

E. Executive Order 13132: Federalism

Executive Order 13132 entitled ''Federalism'' (64 FR 43255, August 10, 1999) requires EPA to develop an accountable process to ensure ''meaningful and timely input by State and local officials in the development of regulatory policies that have federalism implications.'' ''Policies that have federalism implications'' is defined in the Executive Order to include regulations that have ''substantial direct effects on the States, on the relationship between the national government and the States, or on the distribution of power and responsibilities among the various levels of government.''

This final rule does not have federalism implications. It will not have substantial direct effects on the States, on the relationship between the national government and the States, or on the distribution of power and responsibilities among the various levels of government, as specified in Executive Order 13132. This rule will benefit State and local governments by

providing performance specifications they can use to evaluate PEMS. Other amendments being made will correct PS–11, Procedures 1 and 2, Method 24, and Method 303. No added responsibilities or increase in implementation efforts or costs for State and local governments are being added by this action. Thus, Executive Order 13132 does not apply to this rule.

F. Executive Order 13175: Consultation and Coordination with Indian Tribal Governments

This action does not have tribal implications, as specified in Executive Order 13175 (65 FR 67249, November 9, 2000). This action adds an optional monitoring tool to the monitoring provisions that have already been mandated. Thus, Executive Order 13175 does not apply to this action.

G. Executive Order 13045: Protection of Children From Environmental Health Risks and Safety Risks

EPA interprets EO 13045 (62 FR 19885, April 23, 1997) as applying only to those regulatory actions that concern health or safety risks, such that the analysis required under section 5–501 of the EO has the potential to influence the regulation. This action is not subject to EO 13045 because it does not establish an environmental standard intended to mitigate health or safety risks.

H. Executive Order 13211: Actions Concerning Regulations That significantly Affect Energy Supply, Distribution, or Use

This rule is not subject to Executive Order 13211 (66 FR 28355 (May 22, 2001)), because it is not a significant regulatory action under Executive Order 12866.

I. National Technology Transfer and Advancement Act

Section 12(d) of the National Technology Transfer and Advancement Act of 1995 (''NTTAA''), Public Law No. 104–113, 12(d) (15 U.S.C. 272 note) directs EPA to use voluntary consensus standards in its regulatory activities unless to do so would be inconsistent with applicable law or otherwise impractical. Voluntary consensus standards are technical standards (*e.g.*, materials specifications, test methods, sampling procedures, and business practices) that are developed or adopted by voluntary consensus standards bodies. NTTAA directs EPA to provide Congress, through OMB, explanations when the Agency decides not to use available and applicable voluntary consensus standards.

This action does not involve technical standards. Therefore, EPA did not consider the use of any voluntary consensus standards.

J. Executive Order 12898: Federal Actions To Address Environmental Justice in Minority Populations and Low-Income Populations.

Executive Order (EO) 12898 (59 FR 7629 (Feb. 16, 1994)) establishes Federal executive policy on environmental justice. Its main provision directs federal agencies, to the greatest extent practicable and permitted by law, to make environmental justice part of their mission by identifying and addressing, as appropriate, disproportionately high and adverse human health or environmental effects of their programs, policies, and activities on minority populations and low-income populations in the United States.

EPA has determined that this final rule will not have disproportionately high and adverse human health or environmental effects on minority or low-income populations because it does not affect the level of protection provided to human health or the environment. This final rule does not relax the control measures on sources regulated by the rule and, therefore, will not cause emissions increases from these sources.

K. Congressional Review Act

The Congressional Review Act, 5 U.S.C. 801 *et seq.*, as added by the Small Business Regulatory Enforcement Fairness Act of 1996, generally provides that before a rule may take effect, the agency promulgating the rule must submit a rule report, which includes a copy of the rule, to each House of the Congress and to the Comptroller General of the United States. EPA will submit a report containing this rule and other required information to the U.S. Senate, the U.S. House of Representatives, and the Comptroller General of the United States prior to publication of the rule in the **Federal Register**. A Major rule cannot take effect until 60 days after it is published in the **Federal Register**. This action is not a ''major rule'' as defined by 5 U.S.C. 804(2). This rule will be effective April 24, 2009.

List of Subjects

40 CFR Part 60

Administrative practice and procedures, Air pollution control, Intergovernmental relations, Reporting and recordkeeping requirements.

40 CFR Part 63

Environmental protection, Air pollution control, Hazardous substances, Reporting and recordkeeping requirements.

Dated: March 16, 2009.

Lisa Jackson,

Administrator.

■ For the reasons set out in the preamble, title 40, chapter I of the Code of Federal Regulations is amended as follows:

PART 60—STANDARDS OF PERFORMANCE FOR NEW STATIONARY SOURCES

■ 1. The authority citation for Part 60 continues to read as follows:

Authority: 23 U.S.C. 101; 42 U.S.C. 7401–7671q.

■ 2. Section 6.7 is added to Method 24 of Appendix A–7 to read as follows:

Appendix A–7 to Part 60—Test Methods 19 through 25E

* * * * *

Method 24—Determination of Volatile Matter Content, Water Content, Density, Volume Solids, and Weight Solids of Surface Coatings

* * * * *

6.7 ASTM D 6419–00, Test Method for Volatile Content of Sheet-Fed and Coldset Web Offset Printing Inks.

* * * * *

■ 3. Performance Specification 11 of Appendix B is amended as follows:

■ a. By revising Section 3.4.

■ b. By revising Section 8.6, introductory text.

■ c. By revising paragraphs (1)(ii), (1)(iii), (2), (4), and (5) of Section 12.3

■ d. By revising paragraph (3)(ii) of Section 12.4.

■ e. By revising paragraphs (2) and (3) of Section 13.2.

■ f. By adding Sections 16.8 and 16.9.

■ g. By revising Table 1 of Section 17.0 to read as follows:

Appendix B to Part 60—Performance Specifications

* * * * *

Performance Specification 11—Specifications and Test Procedures for Particulate Matter Continuous Emission Monitoring Systems at Stationary Sources

* * * * *

3.4 ''Confidence Interval Half Range (CI)'' is a statistical term and means one-half of the width of the 95 percent confidence interval around the predicted mean PM concentration (y value) calculated at the PM CEMS response value (x value) where the confidence interval is narrowest. Procedures for calculating CI are specified in section 12.3. The CI as a percent of the emission limit value (CI%) is calculated at the appropriate PM CEMS response value and

must satisfy the criteria specified in Section 13.2 (2).

* * * * *

8.6 How do I conduct my PM CEMS correlation test? You must conduct the correlation test according to the procedure given in paragraphs (1) through (5) of this section. If you need multiple correlations, you must conduct testing and collect at least 15 sets of reference method and PM CEMS data for calculating each separate correlation.

* * * * *

12.3 How do I determine my PM CEMS correlation?

* * *

(1) * * *

(ii) Calculate the half range of the 95 percent confidence interval (CI) for the predicted PM concentration ($\hat{y}$) at the mean value of x, using Equation 11–8:

$$CI = t_{df,1-a/2} \cdot S_L \sqrt{\frac{1}{n}} \qquad \text{(Eq. 11-8)}$$

Where:

CI = the half range of the 95 percent confidence interval for the predicted PM concentration at the mean x value,

$t_{df,1-a/2}$ = the value for the t statistic provided in Table 1 for df = (n - 2), and

S_L = the scatter or deviation of $\hat{y}$ values about the correlation curve, which is determined using Equation 11–9:

$$S_L = \sqrt{\frac{1}{n-2}\sum_{i=1}^{n}\left(\hat{y}_i - y_i\right)^2} \qquad \text{(Eq. 11-9)}$$

Calculate the confidence interval half range for the predicted PM concentration ($\hat{y}$) at the mean x value as a percentage of the emission limit (CI%) using Equation 11–10:

$$CI\% = \frac{CI}{EL} \cdot 100\% \qquad \text{(Eq. 11-10)}$$

Where:

CI = the half range of the 95 percent confidence interval for the predicted PM concentration at the mean x value, and

EL = PM emission limit, as described in section 13.2.

(iii) Calculate the half range of the tolerance interval (TI) for the predicted PM concentration ($\hat{y}$) at the mean x value using Equation 11–11:

$$TI = k_T \cdot S_L \qquad \text{(Eq. 11-11)}$$

Where:

TI = the half range of the tolerance interval for the predicted PM concentration ($\hat{y}$) at the mean x value,

k_T = as calculated using Equation 11–12, and

S_L = as calculated using Equation 11–9:

$$k_T = u_{n'} \cdot v_{df} \qquad \text{(Eq. 11-12)}$$

Where:

n′ = the number of test runs (n),

$u_{n'}$ = the tolerance factor for 75 percent coverage at 95 percent confidence provided in Table 1 for df = (n − 2), and

v_{df} = the value from Table 1 for df = (n − 2).

Calculate the half range of the tolerance interval for the predicted PM concentration ($\hat{y}$) at the mean x value as a percentage of the emission limit (TI%) using Equation 11–13:

$$TI\% = \frac{TI}{EL} \cdot 100\% \qquad \text{(Eq. 11-13)}$$

Where:

TI = the half range of the tolerance interval for the predicted PM concentration ($\hat{y}$) at the mean x value, and

EL = PM emission limit, as described in section 13.2.

* * * * *

(2) How do I evaluate a polynomial correlation for my correlation test data? To evaluate a polynomial correlation, follow the procedures described in paragraphs (2)(i) through (iv) of this section.

(i) Calculate the polynomial correlation equation, which is indicated by Equation 11–16, using Equations 11–17 through 11–22:

$$\hat{y} = b_0 + b_1 x + b_2 x^2 \qquad \text{(Eq. 11-16)}$$

Where:

$\hat{y}$ = the PM CEMS concentration predicted by the polynomial correlation equation, and

b_0, b_1, b_2 = the coefficients determined from the solution to the matrix equation Ab=B

Where:

$$A = \begin{bmatrix} n & S_1 & S_2 \\ S_1 & S_2 & S_3 \\ S_2 & S_3 & S_4 \end{bmatrix}, \qquad b = \begin{bmatrix} b_0 \\ b_1 \\ b_2 \end{bmatrix}, \qquad B = \begin{bmatrix} S_5 \\ S_6 \\ S_7 \end{bmatrix}.$$

$$S_1 = \sum_{i=1}^{n}\left(x_i\right), S_2 = \sum_{i=1}^{n}\left(x_i^2\right), S_3 = \sum_{i=1}^{n}\left(x_i^3\right), S_4 = \sum_{i=1}^{n}\left(x_i^4\right) \qquad \text{(Eq. 11-17)}$$

$$S_5 = \sum_{i=1}^{n}\left(y_i\right), S_6 = \sum_{i=1}^{n}\left(x_i y_i\right), S_7 = \sum_{i=1}^{n}\left(x_i^2 y_i\right). \qquad \text{(Eq. 11-18)}$$

Where:

X_i = the PM CEMS response for run i,

Y_i = the reference method PM concentration for run i, and

n = the number of test runs.

Calculate the polynomial correlation curve coefficients (b_0, b_1, and b_2) using Equations 11–19 through 11–21, respectively:

$$b_0 = \frac{\left(S_5 \cdot S_2 \cdot S_4 + S_1 \cdot S_3 \cdot S_7 + S_2 \cdot S_6 \cdot S_3 - S_7 \cdot S_2 \cdot S_2 - S_3 \cdot S_3 \cdot S_5 - S_4 \cdot S_6 \cdot S_1\right)}{\det A} \qquad \text{(Eq. 11-19)}$$

$$b_1 = \frac{\left(n \cdot S_6 \cdot S_4 + S_5 \cdot S_3 \cdot S_2 + S_2 \cdot S_1 \cdot S_7 - S_2 \cdot S_6 \cdot S_2 - S_7 \cdot S_3 \cdot n - S_4 \cdot S_1 \cdot S_5\right)}{\det A} \qquad \text{(Eq. 11-20)}$$

$$b_2 = \frac{\left(n \cdot S_2 \cdot S_7 + S_1 \cdot S_6 \cdot S_2 + S_5 \cdot S_1 \cdot S_3 - S_2 \cdot S_2 \cdot S_5 - S_3 \cdot S_6 \cdot n - S_7 \cdot S_1 \cdot S_1\right)}{\det A} \qquad \text{(Eq. 11-21)}$$

Where:

$$\det A = n \cdot S_2 \cdot S_4 - S_2 \cdot S_2 \cdot S_2 + S_1 \cdot S_3 \cdot S_2 - S_3 \cdot S_3 \cdot n + S_2 \cdot S_1 \cdot S_3 - S_4 \cdot S_1 \cdot S_1 \qquad \text{(Eq. 11-22)}$$

(ii) Calculate the 95 percent confidence interval half range (CI) by first calculating the C coefficients (C_o to C_5) using Equations 11–23 and 11–24:

$$C_0 = \frac{\left(S_2 \cdot S_4 - S_3^2\right)}{D}, \qquad C_1 = \frac{\left(S_3 \cdot S_2 - S_1 \cdot S_4\right)}{D}, \qquad C_2 = \frac{\left(S_1 \cdot S_3 - S_2^2\right)}{D},$$

$$C_3 = \frac{\left(nS_4 - S_2^2\right)}{D}, \qquad C_4 = \frac{\left(S_1 \cdot S_2 - nS_3\right)}{D}, \qquad C_5 = \frac{\left(nS_2 - S_1^2\right)}{D} \qquad \text{(Eq. 11-23)}$$

Where:

$$D = n\left(S_2 \cdot S_4 - S_3^2\right) + S_1\left(S_3 \cdot S_2 - S_1 \cdot S_4\right) + S_2\left(S_1 \cdot S_3 - S_2^2\right) \qquad \text{(Eq. 11-24)}$$

Calculate Δ using Equation 11–25 for each x value:

$$\Delta = C_0 + 2C_1x + \left(2C_2 + C_3\right)x^2 + 2C_4x^3 + C_5x^4 \qquad \text{(Eq. 11-25)}$$

Determine the x value that corresponds to the minimum value of Δ (Δ_{min}). Determine the scatter or deviation of ŷ values about the polynomial correlation curve (S_P) using Equation 11–26:

$$S_P = \sqrt{\frac{1}{n-3}\sum_{i=1}^{n}\left(\hat{y}_i - y_i\right)^2} \qquad \text{(Eq. 11-26)}$$

Calculate the half range of the 95 percent confidence interval (CI) for the predicted PM concentration (ŷ) at the x value that corresponds to Δ_{min} using Equation 11–27:

$$CI = t_{df} \cdot S_p\sqrt{\Delta_{min}} \qquad \text{(Eq. 11-27)}$$

Where:

df = (n–3), and

tdf = as listed in Table 1 (see section 17).

Calculate the half range of the 95 percent confidence interval for the predicted PM concentration at the x value that corresponds to Δ_{min} as a percentage of the emission limit (CI%) using Equation 11–28:

$$CI\% = \frac{CI}{EL} \cdot 100\% \qquad \text{(Eq. 11-28)}$$

Where:

CI = the half range of the 95 percent confidence interval for the predicted PM concentration at the x value that corresponds to Δ_{min}, and

EL = PM emission limit, as described in section 13.2.

(iii) Calculate the tolerance interval half range (TI) for the predicted PM concentration at the x value that corresponds to Δ_{min}, as indicated in Equation 11–29 for the polynomial correlation, using Equations 11–30 and 11–31:

$$TI = k_T \cdot S_P \qquad \text{(Eq. 11-29)}$$

Where:

$$k_T = u_{n'} \cdot v_{df} \qquad \text{(Eq. 11-30)}$$

$$n' = \frac{1}{\Delta} \qquad \text{(Eq. 11-31)}$$

$u_{n'}$ = the value indicated in Table 1 for df = (n′–3), and

vdf = the value indicated in Table 1 for df = (n′—3).

Calculate the tolerance interval half range for the predicted PM concentration at the x value that corresponds to Δ_{min} as a percentage of the emission limit (TI%) using Equation 11–32:

$$TI\% = \frac{TI}{EL} \cdot 100 \qquad \text{(Eq. 11-32)}$$

Where:

TI = the tolerance interval half range for the predicted PM concentration at the x value that corresponds to Δ_{min}, and

EL = PM emission limit, as described in section 13.2.

(iv) Calculate the polynomial correlation coefficient (r) using Equation 11–33:

$$r = \sqrt{1 - \frac{S_P^2}{S_y^2}} \qquad \text{(Eq. 11-33)}$$

Where:

S_P = as calculated using Equation 11–26, and

S_y = as calculated using Equation 11–15.

* * * * *

(4) How do I evaluate an exponential correlation for my correlation test data? To evaluate an exponential correlation, which has the form indicated by Equation 11–37, follow the procedures described in paragraphs (4)(i) through (v) of this section:

$$\hat{y} = b_0 e^{b_1 x} \qquad \text{(Eq. 11-37)}$$

(i) Perform a logarithmic transformation of each PM concentration measurement (y values) using Equation 11–38:

$$y_i' = \mathrm{Ln}\,(y_i) \qquad \text{(Eq. 11-38)}$$

Where:

y'_i = is the transformed value of y_i, and

$\mathrm{Ln}(y_i)$ = the natural logarithm of the PM concentration measurement for run i.

(ii) Using the values for y'_i in place of the values for y_i, perform the same procedures used to develop the linear correlation equation described in paragraph (1)(i) of this section. The resulting equation will have the form indicated by Equation 11–39.

$$\hat{Y}' = b_0' + b_1 x \qquad \text{(Eq. 11-39)}$$

Where:

$\hat{y}'$ = the predicted log PM concentration value,

b'_0 = the natural logarithm of b_0, and the variables b_0, b_1, and x are as defined in paragraph (1)(i) of this section.

(iii) Using the values for y'_i in place of the values for y_i, calculate the half range of the 95 percent confidence interval (CI′), as described in paragraph (1)(ii) of this section for CI. Note that CI′ is on the log scale. Next, calculate the upper and lower 95 percent confidence limits for the mean value $\underline{y}'$ using Equations 11–40 and 11–41:

$$LCL' = \underline{y}' - CI' \qquad \text{(Eq. 11-40)}$$

$$UCL' = \underline{y}' + CI' \qquad \text{(Eq. 11-41)}$$

Where:

LCL′ = the lower 95 percent confidence limit for the mean value $\underline{y}'$,

UCL′ = the upper 95 percent confidence limit for the mean value $\underline{y}'$,

$\underline{y}'$ = the mean value of the log-transformed PM concentrations, and

CI′ = the half range of the 95 percent confidence interval for the predicted PM concentration ($\hat{y}'$), as calculated in Equation 11–8.

Calculate the half range of the 95 percent confidence interval (CI) on the original PM concentration scale using Equation 11–42:

$$CI = \frac{e^{UCL'} - e^{LCL'}}{2} \qquad \text{(Eq. 11-42)}$$

Where:

CI = the half range of the 95 percent confidence interval on the original PM concentration scale, and UCL′ and LCL′ are as defined previously.

Calculate the half range of the 95 percent confidence interval for the predicted PM concentration corresponding to the mean value of x as a percentage of the emission limit (CI%) using Equation 11–10.

(iv) Using the values for y'_i in place of the values for y_i, calculate the half range tolerance interval (TI′), as described in paragraph (1)(iii) of this section for TI. Note that TI′ is on the log scale. Next, calculate the half range tolerance limits for the mean value $\underline{y}'$ using Equations 11–43 and 11–44:

$$LTL' = \underline{y}' - TI' \qquad \text{(Eq. 11-43)}$$

$$UTL' = \underline{y}' + TI' \qquad \text{(Eq. 11-44)}$$

Where:

LTL′ = the lower 95 percent tolerance limit for the mean value $\underline{y}'$,

UTL′ = the upper 95 percent tolerance limit for the mean value $\underline{y}'$,

$\underline{y}'$, = the mean value of the log-transformed PM concentrations, and

TI′ = the half range of the 95 percent tolerance interval for the predicted PM concentration ($\hat{y}'$), as calculated in Equation 11–11.

Calculate the half range tolerance interval (TI) on the original PM concentration scale using Equation 11–45:

$$TI = \frac{e^{UTL'} - e^{LTL'}}{2} \qquad \text{(Eq. 11-45)}$$

TI = the half range of the 95 percent tolerance interval on the original PM scale, and UTL′ and LTL′ are as defined previously.

Calculate the tolerance interval half range for the predicted PM concentration corresponding to the mean value of x as a percentage of the emission limit (TI%) using Equation 11–13.

(v) Using the values for y'_i in place of the values for y_i, calculate the correlation coefficient (r) using the procedure described in paragraph (1)(iv) of this section.

(5) How do I evaluate a power correlation for my correlation test data? To evaluate a power correlation, which has the form indicated by Equation 11–46, follow the procedures described in paragraphs (5)(i) through (v) of this section.

$$\hat{y} = b_0 x^{b_1} \qquad \text{(Eq. 11-46)}$$

(i) Perform logarithmic transformations of each PM CEMS response (*x* values) and each PM concentration measurement (*y* values) using Equations 11–35 and 11–38, respectively.

(ii) Using the values for x'_i in place of the values for x_i, and the values for y'_i in place of the values for y_i, perform the same procedures used to develop the linear correlation equation described in paragraph (1)(i) of this section. The resulting equation will have the form indicated by Equation 11–47:

$$\hat{Y}' = b_0' + b_1 x' \qquad \text{(Eq. 11-47)}$$

Where:

$\hat{y}'$ = the predicted log PM concentration value, and

x′ = the natural logarithm of the PM CEMS response values,

b'_0 = the natural logarithm of b_0, and the variables b_0, b_1, and *x* are as defined in paragraph (1)(i) of this section.

(iii) Using the same procedure described for exponential models in paragraph (4)(iii) of this section, calculate the half range of the 95 percent confidence interval for the predicted PM concentration corresponding to the mean value of x′ as a percentage of the emission limit.

(iv) Using the same procedure described for exponential models in paragraph (4)(iv) of this section, calculate the tolerance interval half range for the predicted PM concentration corresponding to the mean value of x′ as a percentage of the emission limit.

(v) Using the values for y'_i in place of the values for y_i, calculate the correlation coefficient (r) using the procedure described in paragraph (1)(iv) of this section.

Note: PS–11 does not address the application of correlation equations to calculate PM emission concentrations using PM CEMS response data during normal operations of a PM CEMS. However, we will provide guidance on the use of specific correlation models (i.e., logarithmic, exponential, and power models) to calculate PM concentrations in an operating PM CEMS in situations when the PM CEMS response values are equal to or less than zero, and the correlation model is undefined.

12.4 What correlation model should I use?

* * * * *

(3) * * *

(ii) Calculate the minimum value using Equation 11–48.

$$\min \textit{ or } \max = -\frac{b_1}{2b_2} \qquad \text{(Eq. 11-48)}$$

* * * * *

13.2 What performance criteria must my PM CEMS correlation satisfy?

* * * * *

(2) The confidence interval half range must satisfy the applicable criterion specified in paragraph (2)(i), (ii), or (iii) of this section, based on the type of correlation model.

(i) For linear or logarithmic correlations, the 95 percent confidence interval half range at the mean PM CEMS response value from the correlation test must be within 10 percent of the PM emission limit value specified in the applicable regulation. Therefore, the CI% calculated using Equation 11–10 must be less than or equal to 10 percent.

(ii) For polynomial correlations, the 95 percent confidence interval half range at the PM CEMS response value from the correlation test that corresponds to the minimum value for Δ must be within 10 percent of the PM emission limit value specified in the applicable regulation. Therefore, the CI% calculated using Equation 11–28 must be less than or equal to 10 percent.

(iii) For exponential or power correlations, the 95 percent confidence interval half range at the mean of the logarithm of the PM CEMS response values from the correlation test must be within 10 percent of the PM emission limit value specified in the applicable regulation. Therefore, the CI% calculated using Equation 11–10 must be less than or equal to 10 percent.

(3) The tolerance interval half range must satisfy the applicable criterion specified in

paragraph (3)(i), (ii), or (iii) of this section, based on the type of correlation model.

(i) For linear or logarithmic correlations, the half range tolerance interval with 95 percent confidence and 75 percent coverage at the mean PM CEMS response value from the correlation test must be within 25 percent of the PM emission limit value specified in the applicable regulation. Therefore, the TI% calculated using Equation 11–13 must be less than or equal to 25 percent.

(ii) For polynomial correlations, the half range tolerance interval with 95 percent confidence and 75 percent coverage at the PM CEMS response value from the correlation test that corresponds to the minimum value for Δ must be within 25 percent of the PM emission limit value specified in the applicable regulation. Therefore, the TI% calculated using Equation 11–32 must be less than or equal to 25 percent.

(iii) For exponential or power correlations, the half range tolerance interval with 95 percent confidence and 75 percent coverage at the mean of the logarithm of the PM CEMS response values from the correlation test must be within 25 percent of the PM emission limit value specified in the applicable regulation. Therefore, the TI% calculated using Equation 11–13 must be less than or equal to 25 percent.

* * * * *

16.0 Which references are relevant to this performance specification?

* * * * *

16.8 Snedecor, George W. and Cochran, William G. (1989), Statistical Methods, Eighth Edition, Iowa State University Press.

16.9 Wallis, W. A. (1951) ''Tolerance Intervals for Linear Regression,'' in Second Berkeley Symposium on Mathematical Statistics and Probability, ed. J. Neyman, Berkeley: University of California Press, pp. 43–51.

17.0 * * *

TABLE 1—FACTORS FOR CALCULATION OF CONFIDENCE AND TOLERANCE INTERVAL HALF RANGES

df	Student's t, t_{df}	Tolerance interval with 75% coverage and 95% confidence level		
		v_{df} (95%)	$u_{n'}$ (75%)	k_T
3	3.182	2.920	1.266	3.697
4	2.776	2.372	1.247	2.958
5	2.571	2.089	1.233	2.576
6	2.447	1.915	1.223	2.342
7	2.365	1.797	1.214	2.183
8	2.306	1.711	1.208	2.067
9	2.262	1.645	1.203	1.979
10	2.228	1.593	1.198	1.909
11	2.201	1.551	1.195	1.853
12	2.179	1.515	1.192	1.806
13	2.160	1.485	1.189	1.766
14	2.145	1.460	1.186	1.732
15	2.131	1.437	1.184	1.702
16	2.120	1.418	1.182	1.676
17	2.110	1.400	1.181	1.653
18	2.101	1.384	1.179	1.633
19	2.093	1.370	1.178	1.614
20	2.086	1.358	1.177	1.597
21	2.080	1.346	1.175	1.582
22	2.074	1.335	1.174	1.568
23	2.069	1.326	1.173	1.555
24	2.064	1.316	1.172	1.544
25	2.060	1.308	1.172	1.533
26	2.056	1.300	1.171	1.522
27	2.052	1.293	1.170	1.513
28	2.048	1.286	1.170	1.504
29	2.045	1.280	1.169	1.496
30	2.042	1.274	1.168	1.488
31	2.040	1.268	1.168	1.481
32	2.037	1.263	1.167	1.474
33	2.035	1.258	1.167	1.467
34	2.032	1.253	1.166	1.461
35	2.030	1.248	1.166	1.455
36	2.028	1.244	1.165	1.450
37	2.026	1.240	1.165	1.444
38	2.024	1.236	1.165	1.439
39	2.023	1.232	1.164	1.435
40	2.021	1.228	1.164	1.430
41	2.020	1.225	1.164	1.425
42	2.018	1.222	1.163	1.421
43	2.017	1.218	1.163	1.417
44	2.015	1.215	1.163	1.413
45	2.014	1.212	1.163	1.410
46	2.013	1.210	1.162	1.406
47	2.012	1.207	1.162	1.403
48	2.011	1.204	1.162	1.399
49	2.010	1.202	1.162	1.396
50	2.009	1.199	1.161	1.393
51	2.008	1.197	1.161	1.390
52	2.007	1.195	1.161	1.387
53	2.006	1.192	1.161	1.384
54	2.005	1.190	1.161	1.381

TABLE 1—FACTORS FOR CALCULATION OF CONFIDENCE AND TOLERANCE INTERVAL HALF RANGES—Continued

df	Student's t, t_{df}	Tolerance interval with 75% coverage and 95% confidence level		
		v_{df} (95%)	$u_{n'}$ (75%)	k_T
55	2.004	1.188	1.160	1.379
56	2.003	1.186	1.160	1.376
57	2.002	1.184	1.160	1.374
58	2.002	1.182	1.160	1.371
59	2.001	1.180	1.160	1.369
60	2.000	1.179	1.160	1.367

References 16.8 (t values) and 16.9 (v_{df} and $u_{n'}$ values).

■ 4. In Appendix B, Performance Specification 16 is added to read as follows:

Appendix B to Part 60—Performance Specifications

* * * * *

PERFORMANCE SPECIFICATION 16—SPECIFICATIONS AND TEST PROCEDURES FOR PREDICTIVE EMISSION MONITORING SYSTEMS IN STATIONARY SOURCES

1.0 Scope and Application

1.1 *Does this performance specification apply to me?* If you, the source owner or operator, intend to use (with any necessary approvals) a predictive emission monitoring system (PEMS) to show compliance with your emission limitation under 40 CFR 60, 61, or 63, you must use the procedures in this performance specification (PS) to determine whether your PEMS is acceptable for use in demonstrating compliance with applicable requirements. Use these procedures to certify your PEMS after initial installation and periodically thereafter to ensure the PEMS is operating properly. If your PEMS contains a diluent (O_2 or CO_2) measuring component and your emissions limitation is in units that require a diluent measurement (*e.g.* lbs/mm Btu), the diluent component must be tested as well. These specifications apply to PEMS that are installed under 40 CFR 60, 61, and 63 after the effective date of this performance specification. These specifications do not apply to parametric monitoring systems, these are covered under PS–17.

1.1.1 *How do I certify my PEMS after it is installed*? PEMS must pass a relative accuracy (RA) test and accompanying statistical tests in the initial certification test to be acceptable for use in demonstrating compliance with applicable requirements. Ongoing quality assurance tests also must be conducted to ensure the PEMS is operating properly. An ongoing sensor evaluation procedure must be in place before the PEMS certification is complete. The amount of testing and data validation that is required depends upon the regulatory needs, *i.e.*, whether precise quantification of emissions will be needed or whether indication of exceedances of some regulatory threshold will suffice. Performance criteria are more rigorous for PEMS used in determining continual compliance with an emission limit than those used to measure excess emissions. You must perform the initial certification test on your PEMS before reporting any PEMS data as quality-assured.

1.1.2 *Is other testing required after certification*? After you initially certify your PEMS, you must pass additional periodic performance checks to ensure the long-term quality of data. These periodic checks are listed in the table in Section 9. You are always responsible for properly maintaining and operating your PEMS.

2.0 Summary of Performance Specification

The following performance tests are required in addition to other equipment and measurement location requirements.

2.1 Initial PEMS Certification.

2.1.1 Excess Emissions PEMS. For a PEMS that is used for excess emission reporting, the owner or operator must perform a minimum 9-run, 3-level (3 runs at each level) RA test (see Section 8.2).

2.1.2 Compliance PEMS. For a PEMS that is used for continual compliance standards, the owner or operator must perform a minimum 27-run, 3-level (9 runs at each level) RA test (see Section 8.2). Additionally, the data must be evaluated for bias and by F-test and correlation analysis.

2.2 Periodic Quality Assurance (QA) Assessments. Owners and operators of all PEMS are required to conduct quarterly relative accuracy audits (RAA) and yearly relative accuracy test audits (RATA) to assess ongoing PEMS operation. The frequency of these periodic assessments may be shortened by successful operation during a prior year.

3.0 Definitions

The following definitions apply:

3.1 *Centroidal Area* means that area in the center of the stack (or duct) comprising no more than 1 percent of the stack cross-sectional area and having the same geometric shape as the stack.

3.2 *Data Recorder* means the equipment that provides a permanent record of the PEMS output. The data recorder may include automatic data reduction capabilities and may include electronic data records, paper records, or a combination of electronic data and paper records.

3.3 *Defective sensor* means a sensor that is responsible for PEMS malfunction or that operates outside the approved operating envelope. A defective sensor may be functioning properly, but because it is operating outside the approved operating envelope, the resulting predicted emission is not validated.

3.4 *Diluent PEMS* means the total equipment required to predict a diluent gas concentration or emission rate.

3.5 *Operating envelope* means the defined range of a parameter input that is established during PEMS development. Emission data generated from parameter inputs that are beyond the operating envelope are not considered quality assured and are therefore unacceptable.

3.6 *PEMS* means all of the equipment required to predict an emission concentration or emission rate. The system may consist of any of the following major subsystems: sensors and sensor interfaces, emission model, algorithm, or equation that uses process data to generate an output that is proportional to the emission concentration or emission rate, diluent emission model, data recorder, and sensor evaluation system. Systems that use fewer than 3 variables do not qualify as PEMS unless the system has been specifically approved by the Administrator for use as a PEMS. A PEMS may predict emissions data that are corrected for diluent if the relative accuracy and relevant QA tests are passed in the emission units corrected for diluent. Parametric monitoring systems that serve as indicators of compliance and have *parametric* limits but do not predict emissions to comply with an *emissions* limit are not included in this definition.

3.7 *PEMS training* means the process of developing or confirming the operation of the PEMS against a reference method under specified conditions.

3.8 *Quarter* means a quarter of a calendar year in which there are at least 168 unit operating hours.

3.9 *Reconciled Process Data* means substitute data that are generated by a sensor evaluation system to replace that of a failed sensor. Reconciled process data may not be used without approval from the Administrator.

3.10 *Relative Accuracy* means the accuracy of the PEMS when compared to a reference method (RM) at the source. The RA is the average difference between the pollutant PEMS and RM data for a specified number of comparison runs plus a 2.5 percent confidence coefficient, divided by the average of the RM tests. For a diluent PEMS, the RA may be expressed as a percentage of absolute difference between the PEMS and RM. Alternative specifications are given for units that have very low emissions.

3.11 *Relative Accuracy Audit* means a quarterly audit of the PEMS against a

portable analyzer meeting the requirements of ASTM D6522–00 or a RM for a specified number of runs. A RM may be used in place of the portable analyzer for the RAA.

3.12 *Relative Accuracy Test Audit* means a RA test that is performed at least once every four calendar quarters after the initial certification test while the PEMS is operating at the normal operating level.

3.13 *Reference Value* means a PEMS baseline value that may be established by RM testing under conditions when all sensors are functioning properly. This reference value may then be used in the sensor evaluation system or in adjusting new sensors.

3.14 *Sensor Evaluation System* means the equipment or procedure used to periodically assess the quality of sensor input data. This system may be a sub-model that periodically cross-checks sensor inputs among themselves or any other procedure that checks sensor integrity at least daily (when operated for more than one hour in any calendar day).

3.15 *Sensors and Sensor Interface* means the equipment that measures the process input signals and transports them to the emission prediction system.

4.0 Interferences [Reserved]

5.0 Safety [Reserved]

6.0 Equipment and Supplies

6.1 PEMS Design. You must detail the design of your PEMS and make this available in reports and for on-site inspection. You must also establish the following, as applicable:

6.1.1 Number of Input Parameters. An acceptable PEMS will normally use three or more input parameters. You must obtain the Administrator's permission on a case-by-case basis if you desire to use a PEMS having fewer than three input parameters.

6.1.2 Parameter Operating Envelopes. Before you evaluate your PEMS through the certification test, you must specify the input parameters your PEMS uses, define their range of minimum and maximum values (operating envelope), and demonstrate the integrity of the parameter operating envelope using graphs and data from the PEMS development process, vendor information, or engineering calculations, as appropriate. If you operate the PEMS beyond these envelopes at any time after the certification test, the data generated during this condition will not be acceptable for use in demonstrating compliance with applicable requirements. If these parameter operating envelopes are not clearly defined and supported by development data, the PEMS operation will be limited to the range of parameter inputs encountered during the certification test until the PEMS has a new operating envelope established.

6.1.3 Source-Specific Operating Conditions. Identify any source-specific operating conditions, such as fuel type, that affect the output of your PEMS. You may only use the PEMS under the source-specific operating conditions it was certified for.

6.1.4 Ambient Conditions. You must explain whether and how ambient conditions and seasonal changes affect your PEMS. Some parameters such as absolute ambient humidity cannot be manipulated during a test. The effect of ambient conditions such as humidity on the pollutant concentration must be determined and this effect extrapolated to include future anticipated conditions. Seasonal changes and their effects on the PEMS must be evaluated unless you can show that such effects are negligible.

6.1.5 PEMS Principle of Operation. If your PEMS is developed on the basis of known physical principles, you must identify the specific physical assumptions or mathematical manipulations that support its operation. If your PEMS is developed on the basis of linear or nonlinear regression analysis, you must make available the paired data (preferably in graphic form) used to develop or train the model.

6.1.6 Data Recorder Scale. If you are not using a digital recorder, you must choose a recorder scale that accurately captures the desired range of potential emissions. The lower limit of your data recorder's range must be no eater than 20 percent of the applicable emission standard (if subject to an emission standard). The upper limit of your data recorder's range must be determined using the following table. If you obtain approval first, you may use other lower and upper recorder limits.

If PEMS is measuring. . .	And if. . .	Then your upper limit. . .
Uncontrolled emissions, such as NO_X at the stack of a natural gas-fired boiler.	No other regulation sets an upper limit for the data recorder's range.	Must be 1.25 to 2 times the average potential emission level
Uncontrolled emissions, such as NO_X at the stack of a natural gas-fired boiler.	Another regulation sets an upper limit for the data recorder's range.	Must follow the other regulation
Controlled emissions		Must be 1.5 to 2.0 times concentration of the emission standard that applies to your emission unit
Continual compliance emissions for an applicable regulation.		Must be 1.1 to 1.5 times the concentration of the emission standard that applies to your emission unit

6.1.7 Sensor Location and Repair. We recommend you install sensors in an accessible location in order to perform repairs and replacements. Permanently installed platforms or ladders may not be needed. If you install sensors in an area that is not accessible, you may be required to shut down the emissions unit to repair or replace a sensor. Conduct a new RATA after replacing a sensor. All sensors must be calibrated as often as needed but at least as often as recommended by the manufacturers.

6.1.8 Sensor Evaluation System. Your PEMS must be designed to perform automatic or manual determination of defective sensors on at least a daily basis. This sensor evaluation system may consist of a sensor validation sub-model, a comparison of redundant sensors, a spot check of sensor input readings at a reference value, operation, or emission level, or other procedure that detects faulty or failed sensors. Some sensor evaluation systems generate substitute values (reconciled data) that are used when a sensor is perceived to have failed. You must obtain prior approval before using reconciled data.

6.1.9 Parameter Envelope Exceedances. Your PEMS must include a plan to detect and notify the operator of parameter envelope exceedances. Emission data collected outside the ranges of the sensor envelopes will not be considered quality assured.

6.2 Recordkeeping. All valid data recorded by the PEMS must be used to calculate the emission value.

7.0 Reagents and Standards [Reserved]

8.0 Sample Collection, Preservation, Storage, and Transport

8.1 Initial Certification. Use the following procedure to certify your PEMS. Complete all PEMS training before the certification begins.

8.2 Relative Accuracy Test.

8.2.1 Reference Methods. Unless otherwise specified in the applicable regulations, you must use the test methods in Appendix A of this part for the RM test. Conduct the RM tests at three operating levels of the key parameter that most affects emissions (*e.g.*, load level). Conduct the specified number of RM tests at the low (minimum to 50 percent of maximum), mid (an intermediary level between the low and high levels), and high (80 percent to maximum) key parameter operating levels, as practicable. If these levels are not practicable, vary the key parameter range as much as possible over three levels.

8.2.2 Number of RM Tests for Excess Emission PEMS. For PEMS used for excess emission reporting, conduct at least the following number of RM tests at the following key parameter operating levels:

(1) Three at a low level.

(2) Three at a mid level.

(3) Three at a high level.

You may choose to perform more than nine total RM tests. If you perform more than nine tests, you may reject a maximum of three tests as long as the total number of test results used to determine the RA is nine or greater and each operating level has at least three tests. You must report all data, including the rejected data.

8.2.3 Number of RM Tests for Continual Compliance PEMS. For PEMS used to determine compliance, conduct at least the following number of RM tests at the following key parameter operating levels:

(1) Nine at a low level.

(2) Nine at a mid level.

(3) Nine at a high level.

You may choose to perform more than 9 RM runs at each operating level. If you perform more than 9 runs, you may reject a maximum of three runs per level as long as the total number of runs used to determine the RA at each operating level is 9 or greater.

8.2.4 Reference Method Measurement Location. Select an accessible measurement point for the RM that will ensure you measure emissions representatively. Ensure the location is at least two equivalent stack diameters downstream and half an equivalent diameter upstream from the nearest flow disturbance such as the control device, point of pollutant generation, or other place where the pollutant concentration or emission rate can change. You may use a half diameter downstream instead of the two diameters if you meet both of the following conditions:

(1) Changes in the pollutant concentration are caused solely by diluent leakage, such as leaks from air heaters.

(2) You measure pollutants and diluents simultaneously at the same locations.

8.2.5 Traverse Points. Select traverse points that ensure representative samples. Conduct all RM tests within 3 cm of each selected traverse point but no closer than 3 cm to the stack or duct wall. The minimum requirement for traverse points are as follows:

(1) Establish a measurement line across the stack that passes through the center and in the direction of any expected stratification.

(2) Locate a minimum of three traverse points on the line at 16.7, 50.0, and 83.3 percent of the stack inside diameter.

(3) Alternatively, if the stack inside diameter is greater than 2.4 meters, you may locate the three traverse points on the line at 0.4, 1.2, and 2.0 meters from the stack or duct wall. You may not use this alternative option after wet scrubbers or at points where two streams with different pollutant concentrations are combined. You may select different traverse points if you demonstrate and provide verification that it provides a representative sample. You may also use the traverse point specifications given the RM.

8.2.6 Relative Accuracy Procedure. Perform the number of RA tests at the levels required in Sections 8.2.2 and 8.2.3. For integrated samples (*e.g.*, Method 3A or 7E), make a sample traverse of at least 21 minutes, sampling for 7 minutes at each traverse point. For grab samples (*e.g.*, Method 3 or 7), take one sample at each traverse point, scheduling the grab samples so that they are taken simultaneously (within a 3-minute period) or at an equal interval of time apart over a 21-minute period. A test run for grab samples must be made up of at least three separate measurements. Where multiple fuels are used in the monitored unit and the fuel type affects the predicted emissions, determine a RA for each fuel unless the effects of the alternative fuel on predicted emissions or diluent were addressed in the model training process. The unit may only use fuels that have been evaluated this way.

8.2.7 Correlation of RM and PEMS Data. Mark the beginning and end of each RM test run (including the exact time of day) on the permanent record of PEMS output. Correlate the PEMS and the RM test data by the time and duration using the following steps:

A. Determine the integrated pollutant concentration for the PEMS for each corresponding RM test period.

B. Consider system response time, if important, and confirm that the pair of results is on a consistent moisture, temperature, and diluent concentration basis.

C. Compare each average PEMS value to the corresponding average RM value. Use the following guidelines to make these comparisons.

If . . .	Then . . .	And then . . .
The RM has an instrumental or integrated non-instrumental sampling technique.	Directly compare RM and PEMS results.	
The RM has a grab sampling technique	Average the results from all grab samples taken during the test run. The test run must include ≥3 separate grab measurements.	Compare this average RM result with the PEMS result obtained during the run.

Use the paired PEMS and RM data and the equations in Section 12.2 to calculate the RA in the units of the applicable emission standard. For this 3-level RA test, calculate the RA at each operation level.

8.3 Statistical Tests for PEMS that are Used for Continual Compliance. In addition to the RA determination, evaluate the paired RA and PEMS data using the following statistical tests.

8.3.1 Bias Test. From the RA data taken at the mid-level, determine if a bias exists between the RM and PEMS. Use the equations in Section 12.3.1.

8.3.2 F-test. Perform a separate F-test for the RA paired data from each operating level to determine if the RM and PEMS variances differ by more than might be expected from chance. Use the equations in Section 12.3.2.

8.3.3 Correlation Analysis. Perform a correlation analysis using the RA paired data from all operating levels combined to determine how well the RM and PEMS correlate. Use the equations in Section 12.3.3. The correlation is waived if the process cannot be varied to produce a concentration change sufficient for a successful correlation test because of its technical design. In such cases, should a subsequent RATA identify a variation in the RM measured values by more than 30 percent, the waiver will not apply, and a correlation analysis test must be performed at the next RATA.

8.4 Reporting. Summarize in tabular form the results of the RA and statistical tests. Include all data sheets, calculations, and charts (records of PEMS responses) necessary to verify that your PEMS meets the performance specifications. Include in the report the documentation used to establish your PEMS parameter envelopes.

8.5 Reevaluating Your PEMS After a Failed Test, Change in Operations, or Change in Critical PEMS Parameter. After initial certification, if your PEMS fails to pass a quarterly RAA or yearly RATA, or if changes occur or are made that could result in a significant change in the emission rate (*e.g.*, turbine aging, process modification, new process operating modes, or changes to emission controls), your PEMS must be recertified using the tests and procedures in Section 8.1. For example, if you initially developed your PEMS for the emissions unit operating at 80–100 percent of its range, you would have performed the initial test under these conditions. Later, if you wanted to operate the emission unit at 50–100 percent of its range, you must conduct another RA test and statistical tests, as applicable, to verify that the new conditions of 50–100 percent of range are functional. These tests must demonstrate that your PEMS provides acceptable data when operating in the new range or with the new critical PEMS parameter(s). The requirements of Section 8.1 must be completed by the earlier of 60 unit operating days or 180 calendar days after the failed RATA or after the change that caused a significant change in emission rate.

9.0 Quality Control

You must incorporate a QA plan beyond the initial PEMS certification test to verify that your system is generating quality-assured data. The QA plan must include the components of this section.

9.1 QA/QC Summary. Conduct the applicable ongoing tests listed below.

ONGOING QUALITY ASSURANCE TESTS

Test	PEMS regulatory purpose	Acceptability	Frequency
Sensor Evaluation	All	.....	Daily

ONGOING QUALITY ASSURANCE TESTS—Continued

Test	PEMS regulatory purpose	Acceptability	Frequency
RAA	Compliance	3-test average ≤10% of simultaneous PEMS average.	Each quarter except quarter when RATA performed
RATA	All	Same as for RA in Sec. 13.1	Yearly in quarter when RAA not performed
Bias Correction	All	If $d_{avg} \leq \lvert cc \rvert$	Bias test passed (no correction factor needed)
PEMS Training	All	If $F_{critical} \geq F$ r ≥0.8	Optional after initial and subsequent RATAs
Sensor Evaluation Alert Test (optional)	All	See Section 6.1.8	After each PEMS training

9.2 Daily Sensor Evaluation Check. Your sensor evaluation system must check the integrity of each PEMS input at least daily.

9.3 Quarterly Relative Accuracy Audits. In the first year of operation after the initial certification, perform a RAA consisting of at least three 30-minute portable analyzer or RM determinations each quarter a RATA is not performed. The average of the 3 portable analyzer or RM determinations must not differ from the simultaneous PEMS average value by more than 10 percent of the analyzer or RM value or the test is failed. If a PEMS passes all quarterly RAAs in the first year and also passes the subsequent yearly RATA in the second year, you may elect to perform a single mid-year RAA in the second year in place of the quarterly RAAs. This option may be repeated, but only until the PEMS fails either a mid-year RAA or a yearly RATA. When such a failure occurs, you must resume quarterly RAAs in the quarter following the failure and continue conducting quarterly RAAs until the PEMS successfully passes both a year of quarterly RAAs and a subsequent RATA.

9.4 Yearly Relative Accuracy Test Audit. Perform a minimum 9-run RATA at the normal operating level on a yearly basis in the quarter that the RAA is not performed.

10.0 Calibration and Standardization [Reserved]

11.0 Analytical Procedure [Reserved]

12.0 Calculations and Data Analysis

12.1 Nomenclature

B = PEMS bias adjustment factor.
cc = Confidence coefficient.
d_i = Difference between each RM and PEMS run.
d = Arithmetic mean of differences for all runs.
e_i = Individual measurement provided by the PEMS or RM at a particular level.
e_m = Mean of the PEMS or RM measurements at a particular level.
e_p = Individual measurement provided by the PEMS.
e_v = Individual measurement provided by the RM.
F = Calculated F-value.
n = Number of RM runs.
$PEMS_i$ = Individual measurement provided by the PEMS.
$PEMS_{iAdjusted}$ = Individual measurement provided by the PEMS adjusted for bias.
PEMS = Mean of the values provided by the PEMS at the normal operating range during the bias test.
r = Coefficient of correlation.
RA = Relative accuracy.
RAA = Relative accuracy audit.
RM = Average RM value (or in the case of the RAA, the average portable analyzer value). In cases where the average emissions for the test are less than 50 percent of the applicable standard, substitute the emission standard value here in place of the average RM value.
S_d = Standard deviation of differences.
S^2 = Variance of your PEMS or RM.
$t_{0.025}$ = t-value for a one-sided, 97.5 percent confidence interval (see Table 16–1).

12.2 Relative Accuracy Calculations. Calculate the mean of the RM values. Calculate the differences between the pairs of observations for the RM and the PEMS output sets. Finally, calculate the mean of the differences, standard deviation, confidence coefficient, and PEMS RA, using Equations 16–1, 16–2, 16–3, and 16–4, respectively. For compliance PEMS, calculate the RA at each test level. The PEMS must pass the RA criterion at each test level.

12.2.1 Arithmetic Mean. Calculate the arithmetic mean of the differences between paired RM and PEMS observations using Equation 16–1.

$$\bar{d} = \frac{1}{n}\sum_{i=1}^{n} d_i \qquad Eq.\ 16\text{-}1$$

12.2.2 Standard Deviation. Calculate the standard deviation of the differences using Equation 16–2 (positive square root).

$$s_d = \sqrt{\frac{\sum_{i=1}^{n} d_i^2 - \frac{\left(\sum_{i=1}^{n} d_i\right)^2}{n}}{n-1}} \qquad Eq.\ 16\text{-}2$$

12.2.3 Confidence Coefficient. Calculate the confidence coefficient using Equation 16–3 and Table 16–1.

$$cc = t_{0.025}\frac{S_d}{\sqrt{n}} \qquad Eq.\ 16\text{-}3$$

12.2.4 Relative Accuracy. Calculate the RA of your data using Equation 16–4.

$$RA = \frac{\lvert \bar{d} \rvert + \lvert cc \rvert}{\overline{RM}} \times 100 \qquad Eq.\ 16\text{-}4$$

12.3 Compliance PEMS Statistical Tests. If your PEMS will be used for continual compliance purposes, conduct the following tests using the information obtained during the RA tests. For the pollutant measurements at any one test level, if the mean value of the RM is less than either 10 ppm or 5 percent of the emission standard, all statistical tests are waived at that specific test level. For diluent measurements at any one test level, if the mean value of the RM is less than 3 percent of span, all statistical tests are waived for that specific test level.

12.3.1 Bias Test. Conduct a bias test to determine if your PEMS is biased relative to the RM. Determine the PEMS bias by comparing the confidence coefficient obtained from Equation 16–3 to the

arithmetic mean of the differences determined in Equation 16–1. If the arithmetic mean of the differences ($\bar{d}$) is greater than the absolute value of the confidence coefficient (cc), your PEMS must incorporate a bias factor to adjust future PEMS values as in Equation 16–5.

$$PEMS_{iAdjusted} = PEMS_i \ x \ B \qquad \text{Eq. 16-5}$$

Where:

$$B = 1 + \frac{|\bar{d}|}{\overline{PEMS}} \qquad \text{Eq. 16-6a}$$

12.3.2 F-test. Conduct an F-test for each of the three RA data sets collected at different test levels. Calculate the variances of the PEMS and the RM using Equation 16–6.

$$S^2 = \frac{\sum_{i=1}^{n}(e_i - e_m)^2}{n-1} \qquad Eq.\ 16\text{-}6$$

Determine if the variance of the PEMS data is significantly different from that of the RM data at each level by calculating the F-value using Equation 16–7.

$$F = \frac{S^2\ PEMS}{S^2 RM} \qquad Eq.\ 16\text{-}7$$

Compare the calculated F-value with the critical value of F at the 95 percent confidence level with n–1 degrees of freedom. The critical value is obtained from Table 16–2 or a similar table for F-distribution. If the calculated F-value is greater than the critical value at any level, your proposed PEMS is unacceptable. For pollutant PEMS measurements, if the standard deviation of the RM is less than either 3 percent of the span or 5 ppm, use a RM standard deviation of either 5 ppm or 3 percent of span. For diluent PEMS measurements, if the standard deviation of the reference method is less than 3 percent of span, use a RM standard deviation of 3 percent of span.

12.3.3 Correlation Analysis. Calculate the correlation coefficient either manually using Eq. 16–8, on a graph, or by computer using all of the paired data points from all operating levels. Your PEMS correlation must be 0.8 or greater to be acceptable. If during the initial certification test, your PEMS data are determined to be auto-correlated according to the procedures in 40 CFR 75.41(b)(2), or if the signal-to-noise ratio of the data is less than 4, then the correlation analysis is permanently waived.

$$r = \frac{\sum epev - \left(\sum ep\right)\left(\sum ev\right)/n}{\sqrt{\left[\left(\sum ep^2 - \left(\sum ep\right)^2/n\right)\left(\sum ev^2 - \left(\sum ev\right)^2/n\right)\right]}} \qquad Eq.\ 16\text{-}8$$

12.4 Relative Accuracy Audit. Calculate the quarterly RAA using Equation 16–4.

$$RAA = \frac{\overline{PEMS} - \overline{RM}}{\overline{RM}} \ x\ 100 \qquad Eq.\ 16\text{-}9$$

13.0 Method Performance

13.1 PEMS Relative Accuracy. The RA must not exceed 10 percent if the PEMS measurements are greater than 100 ppm or 0.2 lbs/mm Btu. The RA must not exceed 20 percent if the PEMS measurements are between 100 ppm (or 0.2 lb/mm Btu) and 10 ppm (or 0.05 lb/mm Btu). For measurements below 10 ppm, the absolute mean difference between the PEMS measurements and the RM measurements must not exceed 2 pppm. For diluent PEMS, an alternative criterion of ± 1 percent absolute difference between the PEMS and RM may be used if less stringent.

13.2 PEMS Bias. Your PEMS data is considered biased and must be adjusted if the arithmetic mean (d) is greater than the absolute value of the confidence coefficient (cc) in Equations 16.1 and 16.3. In such cases, a bias factor must be used to correct your PEMS data.

13.3 PEMS Variance. Your calculated F-value must not be greater than the critical F-value at the 95-percent confidence level for your PEMS to be acceptable.

13.4 PEMS Correlation. Your calculated r-value must be greater than or equal to 0.8 for your PEMS to be acceptable.

13.5 Relative Accuracy Audits. The average of the 3 portable analyzer or RM determinations must not differ from the simultaneous PEMS average value by more than 10 percent of the analyzer or RM value.

14.0 Pollution Prevention [Reserved]

15.070 Waste Management [Reserved]

16.0 References [Reserved]

17.0 Tables, Diagrams, Flowcharts, and Validation Data

TABLE 16–1—T-VALUES FOR ONE-SIDED, 97.5 PERCENT CONFIDENCE INTERVALS FOR SELECTED SAMPLE SIZES*

n–1	$t_{0.025}$	n–1	$t_{0.025}$
2	12.706	16	2.131
3	4.303	17	2.120
4	3.182	18	2.110
5	2.776	19	2.101
6	2.571	20	2.093
7	2.447	21	2.086
8	2.365	22	2.080
9	2.306	23	2.074
10	2.262	24	2.069
11	2.228	25	2.064
12	2.201	26	2.060
13	2.179	27	2.056
14	2.160	28	2.052
15	2.145	> 29	t-Table

* Use n equal to the number of data points (n–1 equals the degrees of freedom).

TABLE 16–2. F-VALUES FOR CRITICAL VALUE OF F AT THE 95 PERCENT CONFIDENCE LEVEL

d.f. for S^2_{RM}	1	2	3	4	5	6	7	8	9	d.f. for S^2_{PEMS}		
										10	11	12
1	161.4	199.5	215.7	224.6	230.2	234.0	236.8	238.9	240.5	241.8	243.0	243.9
2	18.51	19.00	19.16	19.25	19.30	19.33	19.35	19.37	19.38	19.50	19.40	19.41
3	10.13	9.552	9.277	9.117	9.014	8.941	8.887	8.845	8.812	8.786	8.763	8.745
4	7.709	6.944	6.591	6.388	6.256	6.163	6.094	6.041	5.999	5.964	5.935	5.912
5	6.608	5.786	5.410	5.192	5.050	4.950	4.876	4.818	4.773	4.735	4.703	4.678
6	5.987	5.143	4.757	4.534	4.387	4.284	4.207	4.147	4.099	4.060	4.027	4.000
7	5.591	4.737	4.347	4.120	3.971	3.866	3.787	3.726	3.677	3.637	3.603	3.575
8	5.318	4.459	4.066	3.838	3.688	3.581	3.501	3.438	3.388	3.347	3.313	3.284
9	5.117	4.257	3.863	3.633	3.482	3.374	3.293	3.230	3.179	3.137	3.102	3.073
10	4.965	4.103	3.709	3.478	3.326	3.217	3.136	3.072	3.020	2.978	2.942	2.913
11	4.844	3.982	3.587	3.357	3.204	3.095	3.012	2.948	2.896	2.854	2.817	2.788
12	4.747	3.885	3.490	3.259	3.106	2.996	2.913	2.849	2.796	2.753	2.717	2.687

■ 5. In Procedure 1 of Appendix F, paragraph (3) of Section 5.1.2 and Section 8 is revised as follows:

Appendix F to Part 60—Quality Assurance Procedures

Procedure 1. Quality Assurance Requirements for Gas Continuous Emission Monitoring Systems Used for Compliance Determination

* * * * *

5.1.2 Cylinder Gas Audit (CGA).

* * *

(3) Use Certified Reference Materials (CRM's) (See Citation 1) audit gases that have been certified by comparison to National Institute of Standards and Technology (NIST) or EPA Traceability Protocol Materials (ETPM's) following the most recent edition of EPA's Traceability Protocol No. 1 (See Citation 2). Procedures for preparation of CRM's are described in Citation 1. Procedures for preparation of ETPM's are described in Citation 2. As an alternative to CRM's or ETPM gases, Method 205 (See Citation 3) may be used. The difference between the actual concentration of the audit gas and the concentration indicated by the monitor is used to assess the accuracy of the CEMS.

* * * * *

8. Bibliography

1. ''A Procedure for Establishing Traceability of Gas Mixtures to Certain National Bureau of Standards Standard Reference Materials.'' Joint publication by NBS and EPA–600/7–81–010, Revised 1989. Available from the U.S. Environmental Protection Agency. Quality Assurance Division (MD–77). Research Triangle Park, NC 27711.

2. ''EPA Traceability Protocol For Assay And Certification Of Gaseous Calibration Standards.'' EPA–600/R–97/121, September 1997. Available from EPA's Emission Measurement Center at *http://www.epa.gov/ttn/emc.*

3. Method 205, ''Verification of Gas Dilution Systems for Field Instrument Calibrations,'' 40 CFR 51, Appendix M.

* * * * *

■ 6. In Procedure 2 of Appendix F, Section 10.1, paragraph (3) of Section 10.4, and paragraph (2) of Section 12.0 are revised as follows:

Procedure 2—Quality Assurance Requirements for Particulate Matter Continuous Emission Monitoring Systems at Stationary Sources

* * * * *

10.1 When should I use paired trains for reference method testing? Although not required, we recommend that you should use paired-train reference method testing to generate data used to develop your PM CEMS correlation and for RCA testing. Guidance on the use of paired sampling trains can be found in the PM CEMS Knowledge Document (see section 16.5 of PS–11).

* * * * *

10.4 What are my limits for excessive audit inaccuracy?

* * * * *

(3) What are the criteria for excessive ACA error? Your PM CEMS is out of control if the results of any ACA exceed ± 10 percent of the average audit value, as calculated using Equation 2–1a, or 7.5 percent of the applicable standard, as calculated using Equation 2–1b, whichever is greater.

* * * * *

12.0 What calculations and data analysis must I perform for my PM CEMS?

* * * * *

(2) How do I calculate ACA accuracy? You must use either Equation 2–1a or 2–1b to calculate ACA accuracy for each of the three audit points. However, when calculating ACA accuracy for the first audit point (0 to 20 percent of measurement range), you must use Equation 2–1b to calculate ACA accuracy if the reference standard value (R_v) equals zero.

$$\text{ACA Accuracy} = \frac{|R_{CEM} - R_V|}{R_V} \times 100\% \qquad \text{Eq. 2-1a}$$

Where:

ACA Accuracy = The ACA accuracy at each audit point, in percent,

R_{CEM} = Your PM CEMS response to the reference standard, and

R_V = The reference standard value.

$$\text{ACA Accuracy} = \frac{|C_{CEM} - C_{RV}|}{C_S} \times 100\% \qquad \text{Eq. 2-1b}$$

Where:

ACA Accuracy = The ACA accuracy at each audit point, in percent,

C_{CEM} = The PM concentration that corresponds to your PM CEMS response to the reference standard, as calculated using the correlation equation for your PM CEMS,

C_{RV} = The PM concentration that corresponds to the reference standard value in units consistent with C_{CEM}, and

C_s = The PM concentration that corresponds to the applicable emission limit in units consistent with C_{CEM}.

* * * * *

Part 63—[Amended]

■ 7. The authority citation for Part 63 continues to read as follows:

Authority: 42 U.S.C. 7401 *et seq.*

■ 8. In Method 303 of Appendix A, add a sentence to the end of Section 1.1 to read as follows:

Appendix A to Part 63—Test Methods

Method 303—Determination of Visible Emissions From By-Product Coke Oven Batteries

1.1 Applicability. * * * In order for the test method results to be indicative of plant performance, the time of day of the run should vary.

[FR Doc. E9–6275 Filed 3–24–09; 8:45 am]

BILLING CODE 6560–50–P

ENVIRONMENTAL PROTECTION AGENCY

40 CFR Part 63

[EPA–R09–OAR–2008–0759; FRL–8783–7]

Delegation of National Emission Standards for Hazardous Air Pollutants for Source Categories; State of California; Amador County Air Pollution Control District, San Diego County Air Pollution Control District

AGENCY: Environmental Protection Agency (EPA).

ACTION: Direct final rule.

SUMMARY: EPA is amending certain regulations to reflect the current delegation status of national emission standards for hazardous air pollutants in California. Amador County Air Pollution Control District and San Diego County Air Pollution Control District requested delegation of these federal standards as they apply to non-major sources. Their delegation requests were approved by letter on September 4, 2008. The purpose of this action is to update the listing in the Code of Federal Regulations. EPA Region IX is also waiving the need for duplicate reporting after a California district is delegated these federal standards applicable to non-major sources.

DATES: This rule is effective on May 26, 2009 without further notice, unless EPA receives relevant adverse comments by April 24, 2009. If EPA receives such comments, then it will publish a timely withdrawal in the **Federal Register** informing the public that this rule will not take effect.

ADDRESSES: Submit comments, identified by docket number EPA–R09–OAR–2008–0759, by one of the following methods:

1. *Federal eRulemaking Portal: www.regulations.gov.* Follow the on-line instructions.
2. *E-mail: steckel.andrew@epa.gov.*
3. *Mail or deliver:* Andrew Steckel (Air-4), U.S. Environmental Protection Agency Region IX, 75 Hawthorne Street, San Francisco, CA 94105–3901.

Instructions: All comments will be included in the public docket without change and may be made available online at *www.regulations.gov*, including any personal information provided, unless the comment includes Confidential Business Information (CBI) or other information whose disclosure is restricted by statute. Information that you consider CBI or otherwise protected should be clearly identified as such and should not be submitted through *www.regulations.gov* or e-mail. *www.regulations.gov* is an ''anonymous access'' system, and EPA will not know your identity or contact information unless you provide it in the body of your comment. If you send e-mail directly to EPA, your e-mail address will be automatically captured and included as part of the public comment. If EPA cannot read your comment due to technical difficulties and cannot contact you for clarification, EPA may not be able to consider your comment. Electronic files should avoid the use of special characters, any form of encryption, and be free of any defects or viruses.

Docket: The index to the docket for this action is available electronically at *www.regulations.gov* and in hard copy at EPA Region IX, 75 Hawthorne Street, San Francisco, California. While all documents in the docket are listed in the index, some information may be publicly available only at the hard copy location (e.g., copyrighted material), and some may not be publicly available in either location (e.g., CBI). To inspect the hard copy materials, please schedule an appointment during normal business hours with the contact listed in the **FOR FURTHER INFORMATION CONTACT** section.

FOR FURTHER INFORMATION CONTACT: Mae Wang, EPA Region IX, (415) 947–4124, *wang.mae@epa.gov.*

SUPPLEMENTARY INFORMATION: Throughout this document ''we,'' ''us,'' and ''our'' refer to EPA.

Table of Contents

I. Background
A. Delegation of NESHAP
B. California Delegations
C. Area Source Delegation Requests
II. EPA Action
A. Area Source Delegation Requests
B. Waiver of Duplicate Reporting
III. Statutory and Executive Order Reviews

I. Background

A. Delegation of NESHAP

Section 112(l) of the Clean Air Act, as amended in 1990 (CAA), authorizes EPA to delegate to State or local air pollution control agencies the authority to implement and enforce the standards set out in Title 40 of the Code of Federal Regulations (CFR), Part 63, National Emission Standards for Hazardous Air Pollutants for Source Categories (NESHAP). On November 26, 1993, EPA promulgated regulations, codified at 40 CFR part 63, subpart E (hereinafter referred to as ''Subpart E''), establishing procedures for EPA's approval of State rules or programs under CAA 112(l) (*see* 58 FR 62262). The procedures of Subpart E were later amended on September 14, 2000 (*see* 65 FR 55810).

Any request for approval under CAA section 112(l) must meet the approval criteria in 112(l)(5) and Subpart E. To

streamline the approval process for future applications, a State or local agency may submit a one-time demonstration that it has adequate authorities and resources to implement and enforce any CAA section 112 standards. If such demonstration is approved, then the State or local agency would no longer need to resubmit a demonstration of these same authorities and resources for every subsequent request for delegation of CAA section 112 standards. However, EPA maintains the authority to withdraw its approval if the State does not adequately implement or enforce an approved rule or program. On July 6, 1995, the California Air Resources Board (CARB) submitted a demonstration that California has adequate authorities and resources to implement and enforce CAA section 112 programs and rules. This demonstration was approved on May 21, 1996 (61 FR 25397).

B. California Delegations

While each local air pollution control agency in California (district) has an approved program for receiving delegation of any CAA section 112 standards as promulgated, most California districts currently have delegation only for standards that apply to major sources. As part of EPA's approval of each district's Title V operating permits program, districts received delegation of unchanged federal section 112 standards for Title V sources. This delegation did not extend to sources not covered by the California Title V program submittals. Therefore, California needed to make a separate voluntary request for delegation of any section 112 standards that apply to sources not covered by district Title V programs (e.g., area sources that are not subject to Title V).

C. Area Source Delegation Requests

On October 6, 2003, CARB submitted on behalf of nine California districts a request for delegation of all federal section 112 standards that apply to area sources, with the exception of the dry cleaning and chromium electroplating standards for which State or local rules have already been approved (*see* 61 FR 25397 and 64 FR 12762). This request was approved on December 19, 2003 (*see* 68 FR 70726). In that approval, it was explained that future requests by other districts could be approved by letter, followed by a **Federal Register** notice to codify the delegations into the CFR.

The Amador County Air Pollution Control District and San Diego County Air Pollution Control District later asked CARB to make a delegation request on their behalf for CAA section 112 area source standards. The dates of each district's letter to CARB are listed in the table below:

Local agency	Date of letter to CARB
Amador County APCD	October 6, 2003.
San Diego County APCD	March 25, 2008.

On June 17, 2008, CARB submitted the request on behalf of these two districts. On September 4, 2008, EPA Region IX approved this request by letter, granting each district the authority to implement and enforce existing area source standards unchanged as promulgated by EPA.

II. EPA Action

A. Area Source Delegation Requests

Today's action serves to notify the public that, with the exception of the dry cleaning and chromium electroplating standards, EPA has granted delegation of unchanged federal section 112 area source standards to the following districts in California: Amador County Air Pollution Control District and San Diego County Air Pollution Control District. These districts have authority to implement and enforce existing area source standards unchanged as promulgated by EPA. Each of these districts will also receive delegation of any future area source standards or revisions 90 days after promulgation of these standards or revisions, unless the district chooses to decline delegation of a particular future standard by notifying the EPA Region IX office in writing. If no such notification is received, the delegation will go into effect 90 days after promulgation of the standard or revision, without any additional action from the district or EPA.

B. Waiver of Duplicate Reporting

After a state or local agency has been delegated the authority to implement and enforce a NESHAP, the delegated agency becomes the primary point of contact with respect to that NESHAP. Pursuant to 40 CFR 63.9(a)(4)(ii) and 63.10(a)(4)(ii), EPA Region IX waives the requirement that notifications or reports for delegated area source standards be submitted to EPA as well as the delegated California district. Therefore, in California, after a district receives delegation of an area source NESHAP, the owner or operator of an affected source in that district need only submit notifications or reports to the district. Duplicate copies of those notifications or reports are not required to be submitted to the EPA Region IX office. At this point, this waiver only applies to the specific area source standards delegated to the following districts in California: Amador County Air Pollution Control District, Antelope Valley Air Quality Management District, Butte County Air Quality Management District, Kern County Air Pollution Control District, Mendocino County Air Quality Management District, Mojave Desert Air Quality Management District, Monterey Bay Unified Air Pollution Control District, San Diego County Air Pollution Control District, San Joaquin Valley Unified Air Pollution Control District, San Luis Obispo County Air Pollution Control District, Ventura County Air Pollution Control District, and Yolo-Solano Air Quality Management District (see 40 CFR 63.99(a)(5)(i)(B)). In the future, this waiver will automatically apply each time EPA Region IX delegates an area source standard to a California district. As mentioned previously, these delegations will be granted by letter, followed by a **Federal Register** notice to codify the delegations into the CFR. EPA reserves the right to re-evaluate the appropriateness of such a broad waiver in the event of programmatic changes or on a source category basis. In addition, EPA retains the authority to request information or copies of notifications or reports via CAA section 114.

III. Statutory and Executive Order Reviews

Under the CAA, the Administrator is required to approve a delegation request that complies with the provisions of the CAA and applicable Federal regulations. 42 U.S.C. 7412(l); 40 CFR 63.91(b). Thus, in reviewing state delegation submissions, our role is to approve state choices, provided that they meet the criteria of the CAA. Accordingly, this action merely updates the list of approved delegations in the CFR and does not impose additional requirements beyond those imposed by state law. For that reason, this action:

- Is not a ''significant regulatory action'' subject to review by the Office of Management and Budget under Executive Order 12866 (58 FR 51735, October 4, 1993);
- Does not impose an information collection burden under the provisions of the Paperwork Reduction Act (44 U.S.C. 3501 *et seq.*);
- Is certified as not having a significant economic impact on a substantial number of small entities under the Regulatory Flexibility Act (5 U.S.C. 601 *et seq.*);
- Does not contain any unfunded mandate or significantly or uniquely affect small governments, as described

in the Unfunded Mandates Reform Act of 1995 (Pub. L. 104–4);

• Does not have Federalism implications as specified in Executive Order 13132 (64 FR 43255, August 10, 1999);

• Is not an economically significant regulatory action based on health or safety risks subject to Executive Order 13045 (62 FR 19885, April 23, 1997);

• Is not a significant regulatory action subject to Executive Order 13211 (66 FR 28355, May 22, 2001);

• Is not subject to requirements of section 12(d) of the National Technology Transfer and Advancement Act of 1995 (15 U.S.C. 272 note) because application of those requirements would be inconsistent with the CAA; and

• Does not provide EPA with the discretionary authority to address, as appropriate, disproportionate human health or environmental effects, using practicable and legally permissible methods, under Executive Order 12898 (59 FR 7629, February 16, 1994).

In addition, this rule does not have tribal implications as specified by Executive Order 13175 (65 FR 67249, November 9, 2000), because the delegation submission is not approved to apply in Indian country located in the state, and EPA notes that it will not impose substantial direct costs on tribal governments or preempt tribal law.

The Congressional Review Act, 5 U.S.C. 801 *et seq.*, as added by the Small Business Regulatory Enforcement Fairness Act of 1996, generally provides that before a rule may take effect, the agency promulgating the rule must submit a rule report, which includes a copy of the rule, to each House of the Congress and to the Comptroller General of the United States. EPA will submit a report containing this action and other required information to the U.S. Senate, the U.S. House of Representatives, and the Comptroller General of the United States prior to publication of the rule in the **Federal Register**. A major rule cannot take effect until 60 days after it is published in the **Federal Register**. This action is not a ''major rule'' as defined by 5 U.S.C. 804(2).

Under section 307(b)(1) of the CAA, petitions for judicial review of this action must be filed in the United States Court of Appeals for the appropriate circuit by May 26, 2009. Filing a petition for reconsideration by the Administrator of this final rule does not affect the finality of this action for the purposes of judicial review nor does it extend the time within which a petition for judicial review may be filed, and shall not postpone the effectiveness of such rule or action. This action may not be challenged later in proceedings to enforce its requirements (*see* CAA section 307(b)(2)).

List of Subjects in 40 CFR Part 63

Environmental protection, Administrative practice and procedure, Air pollution control, Hazardous substances, Intergovernmental relations, Reporting and recordkeeping requirements.

Authority: This action is issued under the authority of Section 112 of the Clean Air Act, as amended, 42 U.S.C. 7412.

Dated: March 9, 2009.

Deborah Jordan,

Director, Air Division, Region IX.

■ Title 40, chapter I, part 63 of the Code of Federal Regulations is amended as follows:

PART 63—[AMENDED]

■ 1. The authority citation for Part 63 continues to read as follows:

Authority: 42 U.S.C. 7401, *et seq.*

Subpart E—Approval of State Programs and Delegation of Federal Authorities

■ 2. Section 63.99 is amended by revising paragraph (a)(5)(i)(B) to read as follows:

§ 63.99 Delegated Federal authorities.

(a) * * *

(5) * * *

(i) * * *

(B) *California area sources.* Except as described in paragraph (a)(5)(ii) of this section, the local agencies listed below also have delegation for national emission standards promulgated in this part as they apply to area sources:

(*1*) Amador County Air Pollution Control District.

(*2*) Antelope Valley Air Quality Management District.

(*3*) Butte County Air Quality Management District.

(*4*) Kern County Air Pollution Control District.

(*5*) Mendocino County Air Quality Management District.

(*6*) Mojave Desert Air Quality Management District.

(*7*) Monterey Bay Unified Air Pollution Control District.

(*8*) San Diego County Air Pollution Control District.

(*9*) San Joaquin Valley Unified Air Pollution Control District, only for standards promulgated in this part and incorporated by reference in district Rule 4002, amended on May 20, 2004.

(*10*) San Luis Obispo County Air Pollution Control District.

(*11*) Ventura County Air Pollution Control District.

(*12*) Yolo-Solano Air Quality Management District.

* * * * *

[FR Doc. E9–6606 Filed 3–24–09; 8:45 am]

BILLING CODE 6560–50–P

ENVIRONMENTAL PROTECTION AGENCY

40 CFR Part 180

[EPA–HQ–OPP–2008–0666; FRL–8399–8]

Castor Oil, Ethoxylated, Oleate; Tolerance Exemption

AGENCY: Environmental Protection Agency (EPA).

ACTION: Final rule.

SUMMARY: This regulation establishes an exemption from the requirement of a tolerance for residues of castor oil, ethoxylated, oleate, minimum number average molecular weight (in amu) 2,000, (CAS No. 220037–02–05); when used as an inert ingredient in a pesticide chemical formulation. Goldschmidt Chemical Corporation submitted a petition to EPA under the Federal Food, Drug, and Cosmetic Act (FFDCA), requesting an exemption from the requirement of a tolerance. This regulation eliminates the need to establish a maximum permissible level for residues of castor oil, ethoxylated, oleate on food or feed commodities.

DATES: This regulation is effective March 25, 2009. Objections and requests for hearings must be received on or before May 26, 2009, and must be filed in accordance with the instructions provided in 40 CFR part 178 (see also Unit I.C. of the **SUPPLEMENTARY INFORMATION**).

ADDRESSES: EPA has established a docket for this action under docket identification (ID) number EPA–HQ–OPP–2008–0666.. All documents in the docket are listed in the docket index available at *http://www.regulations.gov*. Although listed in the index, some information is not publicly available, e.g., Confidential Business Information (CBI) or other information whose disclosure is restricted by statute. Certain other material, such as copyrighted material, is not placed on the Internet and will be publicly available only in hard copy form. Publicly available docket materials are available in the electronic docket at *http://www.regulations.gov*, or, if only available in hard copy, at the OPP Regulatory Public Docket in Rm. S–4400, One Potomac Yard (South Bldg.), 2777 S. Crystal Dr., Arlington, VA. The Docket Facility is open from 8:30 a.m.

to 4 p.m., Monday through Friday, excluding legal holidays. The Docket Facility telephone number is (703) 305–5805.

FOR FURTHER INFORMATION CONTACT: Deirdre Sunderland, Registration Division (7505P), Office of Pesticide Programs, Environmental Protection Agency, 1200 Pennsylvania Ave., NW., Washington, DC 20460–0001; telephone number: (703) 603–0851; e-mail address: *sunderland.deirdre@epa.gov*.

SUPPLEMENTARY INFORMATION:

I. General Information

A. Does this Action Apply to Me?

You may be potentially affected by this action if you are an agricultural producer, food manufacturer, or pesticide manufacturer. Potentially affected entities may include, but are not limited to:

- Crop production (NAICS code 111).
- Animal production (NAICS code 112).
- Food manufacturing (NAICS code 311).
- Pesticide manufacturing (NAICS code 32532).

This listing is not intended to be exhaustive, but rather provides a guide for readers regarding entities likely to be affected by this action. Other types of entities not listed in this unit could also be affected. The North American Industrial Classification System (NAICS) codes have been provided to assist you and others in determining whether this action might apply to certain entities. If you have any questions regarding the applicability of this action to a particular entity, consult the person listed under **FOR FURTHER INFORMATION CONTACT**.

B. How Can I Access Electronic Copies of this Document?

In addition to accessing electronically available documents at *http://www.regulations.gov*, you may access this **Federal Register** document electronically through the EPA Internet under the ''**Federal Register**'' listings at *http://www.epa.gov/fedrgstr*. You may also access a frequently updated electronic version of 40 CFR part 180 through the Government Printing Office's pilot e-CFR site at *http://www.gpoaccess.gov/ecfr*.

C. Can I File an Objection or Hearing Request?

Under section 408(g) of FFDCA, 21 U.S.C. 346a, any person may file an objection to any aspect of this regulation and may also request a hearing on those objections. The EPA procedural regulations which govern the submission of objections and requests for hearings appear in 40 CFR part 178. You must file your objection or request a hearing on this regulation in accordance with the instructions provided in 40 CFR part 178. To ensure proper receipt by EPA, you must identify docket ID number EPA–HQ–OPP–2008–0666. in the subject line on the first page of your submission. All requests must be in writing, and must be mailed or delivered to the Hearing Clerk on or before May 26, 2009.

In addition to filing an objection or hearing request with the Hearing Clerk as described in 40 CFR part 178, please submit a copy of the filing that does not contain any CBI for inclusion in the public docket that is described in **ADDRESSES**. Information not marked confidential pursuant to 40 CFR part 2 may be disclosed publicly by EPA without prior notice. Submit your copies, identified by docket ID number EPA–HQ–OPP–2008–0666, by one of the following methods.

- *Federal eRulemaking Portal*: *http://www.regulations.gov*. Follow the on-line instructions for submitting comments.
- *Mail*: Office of Pesticide Programs (OPP) Regulatory Public Docket (7502P), Environmental Protection Agency, 1200 Pennsylvania Ave., NW., Washington, DC 20460–0001.
- *Delivery*: OPP Regulatory Public Docket (7502P), Environmental Protection Agency, Rm. S–4400, One Potomac Yard (South Bldg.), 2777 S. Crystal Dr., Arlington, VA. Deliveries are only accepted during the Docket Facility's normal hours of operation (8:30 a.m. to 4 p.m., Monday through Friday, excluding legal holidays). Special arrangements should be made for deliveries of boxed information. The Docket Facility telephone number is (703) 305–5805.

II. Background and Statutory Findings

In the **Federal Register** of December 3, 2008 (73 FR 73640) (FRL–8390–4), EPA issued a notice pursuant to section 408 of FFDCA, 21 U.S.C. 346a, announcing the receipt of a pesticide petition (PP 8E7336) filed by Goldschmidt Chemical Company, Degussa, 710 South Sixth Avenue, Hopewell, VA 23860. The petition requested that 40 CFR 180.960 be amended by establishing an exemption from the requirement of a tolerance for residues of castor oil, ethoxylated, oleate, minimum number average molecular weight (in amu) 2,000; (CAS No. 220037–02–05). That notice included a summary of the petition prepared by the petitioner and solicited comments on the petitioner's request. The Agency did not receive any comments.

Section 408(c)(2)(A)(i) of FFDCA allows EPA to establish an exemption from the requirement for a tolerance (the legal limit for a pesticide chemical residue in or on a food) only if EPA determines that the tolerance is ''safe.'' Section 408(c)(2)(A)(ii) of FFDCA defines ''safe'' to mean that ''there is a reasonable certainty that no harm will result from aggregate exposure to the pesticide chemical residue, including all anticipated dietary exposures and all other exposures for which there is reliable information.'' This includes exposure through drinking water and use in residential settings, but does not include occupational exposure. Section 408(b)(2)(C) of FFDCA requires EPA to give special consideration to exposure of infants and children to the pesticide chemical residue in establishing an exemption from the requirement of a tolerance and to ''ensure that there is a reasonable certainty that no harm will result to infants and children from aggregate exposure to the pesticide chemical residue. . .'' and specifies factors EPA is to consider in establishing an exemption.

III. Risk Assessment and Statutory Findings

EPA establishes exemptions from the requirement of a tolerance only in those cases where it can be shown that the risks from aggregate exposure to pesticide chemical residues under reasonably foreseeable circumstances will pose no appreciable risks to human health. In order to determine the risks from aggregate exposure to pesticide inert ingredients, the Agency considers the toxicity of the inert in conjunction with possible exposure to residues of the inert ingredient through food, drinking water, and through other exposures that occur as a result of pesticide use in residential settings. If EPA is able to determine that a finite tolerance is not necessary to ensure that there is a reasonable certainty that no harm will result from aggregate exposure to the inert ingredient, an exemption from the requirement of a tolerance may be established.

Consistent with section 408(b)(2)(D) of FFDCA, EPA has reviewed the available scientific data and other relevant information in support of this action and considered its validity, completeness and reliability and the relationship of this information to human risk. EPA has also considered available information concerning the variability of the sensitivities of major identifiable subgroups of consumers, including infants and children. In the case of certain chemical substances that are defined as polymers, the Agency has

established a set of criteria to identify categories of polymers expected to present minimal or no risk. The definition of a polymer is given in 40 CFR 723.250(b) and the exclusion criteria for identifying these low-risk polymers are described in 40 CFR 723.250(d). Castor oil, ethoxylated, oleate conforms to the definition of a polymer given in 40 CFR 723.250(b) and meets the following criteria that are used to identify low-risk polymers.

1. The polymer is not a cationic polymer nor is it reasonably anticipated to become a cationic polymer in a natural aquatic environment.

2. The polymer does contain as an integral part of its composition the atomic elements carbon, hydrogen, and oxygen.

3. The polymer does not contain as an integral part of its composition, except as impurities, any element other than those listed in 40 CFR 723.250(d)(2)(ii).

4. The polymer is neither designed nor can it be reasonably anticipated to substantially degrade, decompose, or depolymerize.

5. The polymer is manufactured or imported from monomers and/or reactants that are already included on the TSCA Chemical Substance Inventory or manufactured under an applicable TSCA section 5 exemption.

6. The polymer is not a water absorbing polymer with a number average molecular weight (MW) greater than or equal to 10,000 daltons.

Additionally, the polymer also meets as required the following exemption criteria specified in 40 CFR 723.250(e).

7. The polymer's number average MW of 2,000 daltons is greater than 1,000 and less than 10,000 daltons. The polymer contains less than 10% oligomeric material below MW 500 and less than 25% oligomeric material below MW 1,000, and the polymer does not contain any reactive functional groups.

Thus, castor oil, ethoxylated, oleate meets the criteria for a polymer to be considered low risk under 40 CFR 723.250. Based on its conformance to the criteria in this unit, no mammalian toxicity is anticipated from dietary, inhalation, or dermal exposure to castor oil, ethoxylated, oleate.

IV. Aggregate Exposures

For the purposes of assessing potential exposure under this exemption, EPA considered that castor oil, ethoxylated, oleate could be present in all raw and processed agricultural commodities and drinking water, and that non-occupational non-dietary exposure was possible. The number average MW of castor oil, ethoxylated, oleate is 2,000 daltons. Generally, a polymer of this size would be poorly absorbed through the intact gastrointestinal tract or through intact human skin. Since castor oil, ethoxylated, oleate conform to the criteria that identify a low-risk polymer, there are no concerns for risks associated with any potential exposure scenarios that are reasonably foreseeable. The Agency has determined that a tolerance is not necessary to protect the public health.

V. Cumulative Effects

Section 408 (b)(2)(D)(v) of FFDCA requires that, when considering whether to establish, modify, or revoke a tolerance or tolerance exemption, the Agency consider ''available information'' concerning the cumulative effects of a particular chemical's residues and ''other substances that have a common mechanism of toxicity.'' For the purposes of this tolerance action, EPA has not assumed that castor oil, ethoxylated, oleate has a common mechanism of toxicity with other substances, based on the anticipated absence of mammalian toxicity. For information regarding EPA's efforts to determine which chemicals have a common mechanism of toxicity and to evaluate the cumulative effects of such chemicals, see the policy statements released by EPA's Office of Pesticide Programs concerning common mechanism determinations and procedures for cumulating effects from substances found to have a common mechanism on EPA's website at *http://www.epa.gov/pesticides/cumulative*.

VI. Additional Safety Factor for the Protection of Infants and Children

Section 408(b)(2)(C) of FFDCA provides that EPA shall apply an additional tenfold margin of safety for infants and children in the case of threshold effects to account for prenatal and postnatal toxicity and the completeness of the data base unless EPA concludes that a different margin of safety will be safe for infants and children. Due to the expected low toxicity of castor oil, ethoxylated, oleate, EPA has not used a safety factor analysis to assess the risk. For the same reasons the additional tenfold safety factor is unnecessary.

VII. Determination of Safety

Based on the conformance to the criteria used to identify a low-risk polymer, EPA concludes that there is a reasonable certainty of no harm to the U.S. population, including infants and children, from aggregate exposure to residues of castor oil, ethoxylated, oleate.

VIII. Other Considerations

A. Analytical Enforcement Methodology

An analytical method is not required for enforcement purposes since the Agency is establishing an exemption from the requirement of a tolerance without any numerical limitation.

B. International Tolerances

The Agency is not aware of any country requiring a tolerance for castor oil, ethoxylated, oleate nor have any CODEX Maximum Residue Levels been established for any food crops at this time.

IX. Conclusion

Accordingly, EPA finds that exempting residues of castor oil, ethoxylated, oleate from the requirement of a tolerance will be safe.

X. Statutory and Executive Order Reviews

This final rule establishes a tolerance under section 408(d) of FFDCA in response to a petition submitted to the Agency. The Office of Management and Budget (OMB) has exempted these rules from review under Executive Order 12866, entitled *Regulatory Planning and Review* (58 FR 51735, October 4, 1993). Because this final rule has been exempted from review under Executive Order 12866, this final rule is not subject to Executive Order 13211, entitled *Actions Concerning Regulations That Significantly Affect Energy Supply, Distribution, or Use* (66 FR 28355, May 22, 2001) or Executive Order 13045, entitled *Protection of Children from Environmental Health Risks and Safety Risks* (62 FR 19885, April 23, 1997). This final rule does not contain any information collections subject to OMB approval under the Paperwork Reduction Act (PRA), 44 U.S.C. 3501 *et seq.*, nor does it involve any technical standards that would require Agency consideration of voluntary consensus standards pursuant to section 12(d) of the National Technology Transfer and Advancement Act of 1995 (NTTAA), Public Law 104–113, section 12(d) (15 U.S.C. 272 note).

Since tolerances and exemptions that are established on the basis of a petition under section 408(d) of FFDCA, such as the tolerance in this final rule, do not require the issuance of a proposed rule, the requirements of the Regulatory Flexibility Act (RFA) (5 U.S.C. 601 *et seq.*) do not apply.

This final rule directly regulates growers, food processors, food handlers, and food retailers, not States or tribes,

nor does this action alter the relationships or distribution of power and responsibilities established by Congress in the preemption provisions of section 408(n)(4) of FFDCA. As such, the Agency has determined that this action will not have a substantial direct effect on States or tribal governments, on the relationship between the national government and the States or tribal governments, or on the distribution of power and responsibilities among the various levels of government or between the Federal Government and Indian tribes, or otherwise have any unique impacts or local governments. Thus, the Agency has determined that Executive Order 13132, entitled *Federalism* (64 FR 43255, August 10, 1999) and Executive Order 13175, entitled *Consultation and Coordination with Indian Tribal Governments* (65 FR 67249, November 9, 2000) do not apply to this final rule. In addition, this final rule does not impose any enforceable duty or contain any unfunded mandate as described under Title II of the Unfunded Mandates Reform Act of 1995 (UMRA) (Public Law 104–4).

Although this action does not require any special considerations under Executive Order 12898, entitled *Federal Actions to Address Environmental Justice in Minority Populations and Low-Income Populations* (59 FR 7629, February 16, 1994), EPA seeks to achieve environmental justice, the fair treatment and meaningful involvement of any group, including minority and/or low-income populations, in the development, implementation, and enforcement of environmental laws, regulations, and policies. As such, to the extent that information is publicly available or was submitted in comments to EPA, the Agency considered whether groups or segments of the population, as a result of their location, cultural practices, or other factors, may have atypical or disproportionately high and adverse human health impacts or environmental effects from exposure to the pesticide discussed in this document, compared to the general population.

XI. Congressional Review Act

The Congressional Review Act, 5 U.S.C. 801 *et seq.*, generally provides that before a rule may take effect, the agency promulgating the rule must submit a rule report to each House of the Congress and to the Comptroller General of the United States. EPA will submit a report containing this rule and other required information to the U.S. Senate, the U.S. House of Representatives, and the Comptroller General of the United States prior to publication of this rule in the **Federal Register**. This rule is not a ''major rule'' as defined by 5 U.S.C. 804(2).

List of Subjects in 40 CFR Part 180

Environmental protection, Administrative practice and procedure, Agricultural commodities, Pesticides and pests, Reporting and recordkeeping requirements.

Dated: February 24, 2009.

Lois Rossi,

Director, Registration Division, Office of Pesticide Programs.

■ Therefore, 40 CFR chapter I is amended as follows:

PART 180—[AMENDED]

■ 1. The authority citation for part 180 continues to read as follows:

Authority: 21 U.S.C. 321(q), 346a and 371.

■ 2. In §180.960, the table is amended by adding alphabetically the following polymer to read:

§ 180.960 Polymers; exemptions from the requirement of a tolerance.

* * * * *

Polymer	CAS No.
* * *	* *
Castor oil, ethoxylated, oleate, minimum number average molecular weight (in amu) 2,000.	220037–02–5
* * *	* *

[FR Doc. E9–6258 Filed 3–24–09; 8:45 am]

BILLING CODE 6560–50–S

ENVIRONMENTAL PROTECTION AGENCY

40 CFR Part 180

[EPA–HQ–OPP–2008–0845; FRL–8401–5]

Dinotefuran; Pesticide Tolerances for Emergency Exemptions

AGENCY: Environmental Protection Agency (EPA).

ACTION: Final rule.

SUMMARY: This regulation establishes time-limited tolerances for combined residues of dinotefuran, [*N* -methyl- *N* ′-nitro- *N*″ -((tetrahydro-3-furanyl)methyl)guanidine] and its metabolites DN [1-methyl-3-(tetrahydro-3-furylmethyl)guanidine] and UF [1-methyl-3-(tetrahydro-3-furylmethyl)urea], expressed as dinotefuran in or on rice, grain. This action is in response to EPA's granting of an emergency exemption under section 18 of the Federal Insecticide, Fungicide, and Rodenticide Act (FIFRA) authorizing use of the pesticide on rice. This regulation establishes a maximum permissible level for residues of dinotefuran in this food commodity. The time-limited tolerance expires and is revoked on December 31, 2009.

DATES: This regulation is effective March 25, 2009. Objections and requests for hearings must be received on or before May 26, 2009, and must be filed in accordance with the instructions provided in 40 CFR part 178 (see also Unit I.C. of the **SUPPLEMENTARY INFORMATION**).

ADDRESSES: EPA has established a docket for this action under docket identification (ID) number EPA–HQ–OPP–2008–0845. All documents in the docket are listed in the docket index available in *http://www.regulations.gov*. Although listed in the index, some information is not publicly available, e.g., Confidential Business Information (CBI) or other information whose disclosure is restricted by statute. Certain other material, such as copyrighted material, is not placed on the Internet and will be publicly available only in hard copy form. Publicly available docket materials are available in the electronic docket at *http://www.regulations.gov*, or, if only available in hard copy, at the OPP Regulatory Public Docket in Rm. S–4400, One Potomac Yard (South Bldg.), 2777 S. Crystal Dr., Arlington, VA. The Docket Facility is open from 8:30 a.m. to 4 p.m., Monday through Friday, excluding legal holidays. The Docket Facility telephone number is (703) 305–5805.

FOR FURTHER INFORMATION CONTACT: Libby Pemberton, Registration Division (7505P), Office of Pesticide Programs, Environmental Protection Agency, 1200 Pennsylvania Ave., NW., Washington, DC 20460–0001; telephone number: (703) 308–9364; e-mail address: *pemberton.libby@epa.gov*.

SUPPLEMENTARY INFORMATION:

I. General Information

A. Does this Action Apply to Me?

You may be potentially affected by this action if you are an agricultural producer, food manufacturer, or pesticide manufacturer. Potentially affected entities may include, but are not limited to:

- Crop production (NAICS code 111).
- Animal production (NAICS code 112).
- Food manufacturing (NAICS code 311).

• Pesticide manufacturing (NAICS code 32532).

This listing is not intended to be exhaustive, but rather provides a guide for readers regarding entities likely to be affected by this action. Other types of entities not listed in this unit could also be affected. The North American Industrial Classification System (NAICS) codes have been provided to assist you and others in determining whether this action might apply to certain entities. If you have any questions regarding the applicability of this action to a particular entity, consult the person listed under **FOR FURTHER INFORMATION CONTACT**.

B. How Can I Access Electronic Copies of this Document?

In addition to accessing electronically available documents at *http://www.regulations.gov*, you may access this **Federal Register** document electronically through the EPA Internet under the ''**Federal Register**'' listings at *http://www.epa.gov/fedrgstr*. You may also access a frequently updated electronic version of 40 CFR part 180 through the Government Printing Office's e-CFR cite at *http://www.gpoaccess.gov/ecfr*.

C. Can I File an Objection or Hearing Request?

Under section 408(g) of the Federal Food, Drug, and Cosmetic Act (FFDCA), 21 U.S.C. 346a, any person may file an objection to any aspect of this regulation and may also request a hearing on those objections. The EPA procedural regulations which govern the submission of objections and requests for hearings appear in 40 CFR part 178. You must file your objection or request a hearing on this regulation in accordance with the instructions provided in 40 CFR part 178. To ensure proper receipt by EPA, you must identify docket ID number EPA–HQ–OPP–2008–0845 in the subject line on the first page of your submission. All requests must be in writing, and must be mailed or delivered to the Hearing Clerk on or before May 26, 2009.

In addition to filing an objection or hearing request with the Hearing Clerk as described in 40 CFR part 178, please submit a copy of the filing that does not contain any CBI for inclusion in the public docket that is described in **ADDRESSES**. Information not marked confidential pursuant to 40 CFR part 2 may be disclosed publicly by EPA without prior notice. Submit your copies, identified by docket ID number EPA–HQ–OPP–2008–0845, by one of the following methods:

• *Federal eRulemaking Portal*: *http://www.regulations.gov*. Follow the on-line instructions for submitting comments.

• *Mail*: Office of Pesticide Programs (OPP) Regulatory Public Docket (7502P), Environmental Protection Agency, 1200 Pennsylvania Ave., NW., Washington, DC 20460–0001.

• *Delivery*: OPP Regulatory Public Docket (7502P), Environmental Protection Agency, Rm. S–4400, One Potomac Yard (South Bldg.), 2777 S. Crystal Dr., Arlington, VA. Deliveries are only accepted during the Docket Facility's normal hours of operation (8:30 a.m. to 4 p.m., Monday through Friday, excluding legal holidays). Special arrangements should be made for deliveries of boxed information. The Docket Facility telephone number is (703) 305–5805.

II. Background and Statutory Findings

EPA, on its own initiative, in accordance with sections 408(e) and 408(l)(6) of FFDCA, 21 U.S.C. 346a(e) and 346a(1)(6), is establishing time-limited tolerances for combined residues of dinotefuran. This time-limited tolerance expires and is revoked on December 31, 2009. EPA will publish a document in the **Federal Register** to remove the revoked tolerances for the combined residues of the insecticide, dinotefuran, [N -methyl- *N′*-nitro- *N″* -((tetrahydro-3-furanyl)methyl)guanidine] and its metabolites DN [1-methyl-3-(tetrahydro-3-furylmethyl)guanidine] and UF [1-methyl-3-(tetrahydro-3-furylmethyl)urea], expressed as dinotefuran from the CFR.

Section 408(l)(6) of FFDCA requires EPA to establish a time-limited tolerance or exemption from the requirement for a tolerance for pesticide chemical residues in food that will result from the use of a pesticide under an emergency exemption granted by EPA under section 18 of FIFRA. Such tolerances can be established without providing notice or period for public comment. EPA does not intend for its actions on section 18 related time-limited tolerances to set binding precedents for the application of section 408 of FFDCA and the new safety standard to other tolerances and exemptions. Section 408(e) of FFDCA allows EPA to establish a tolerance or an exemption from the requirement of a tolerance on its own initiative, i.e., without having received any petition from an outside party.

Section 408(b)(2)(A)(i) of FFDCA allows EPA to establish a tolerance (the legal limit for a pesticide chemical residue in or on a food) only if EPA determines that the tolerance is ''safe.'' Section 408(b)(2)(A)(ii) of FFDCA defines ''safe'' to mean that ''there is a reasonable certainty that no harm will result from aggregate exposure to the pesticide chemical residue, including all anticipated dietary exposures and all other exposures for which there is reliable information.'' This includes exposure through drinking water and in residential settings, but does not include occupational exposure. Section 408(b)(2)(C) of FFDCA requires EPA to give special consideration to exposure of infants and children to the pesticide chemical residue in establishing a tolerance and to ''ensure that there is a reasonable certainty that no harm will result to infants and children from aggregate exposure to the pesticide chemical residue. . . .''

Section 18 of FIFRA authorizes EPA to exempt any Federal or State agency from any provision of FIFRA, if EPA determines that ''emergency conditions exist which require such exemption.'' EPA has established regulations governing such emergency exemptions in 40 CFR part 166.

III. Emergency Exemption for Dinotefuran on Rice and FFDCA Tolerances

Texas declared a crisis exemption under FIFRA section 18 for the use of dinotefuran on rice for control of rice stink bug (*Oebalus pugnax (F.*).

As part of its evaluation of the emergency exemption application, EPA assessed the potential risks presented by the combined residues of dinotefuran, [*N* -methyl- *N′*-nitro- *N″* -((tetrahydro-3-furanyl)methyl)guanidine] and its metabolites DN [1-methyl-3-(tetrahydro-3-furylmethyl)guanidine] and UF [1-methyl-3-(tetrahydro-3-furylmethyl)urea], expressed as dinotefuran in or on rice, grain. In doing so, EPA considered the safety standard in section 408(b)(2) of FFDCA, and EPA decided that the necessary tolerance under section 408(l)(6) of FFDCA would be consistent with the safety standard and with FIFRA section 18. Consistent with the need to move quickly on the emergency exemption in order to address an urgent non-routine situation and to ensure that the resulting food is safe and lawful, EPA is issuing this tolerance without notice and opportunity for public comment as provided in section 408(l)(6) of FFDCA. Although these time-limited tolerances expire and are revoked on December 31, 2009, under section 408(l)(5) of FFDCA, residues of the pesticide not in excess of the amounts specified in the tolerance remaining in or on rice, grain after that date will not be unlawful, provided the pesticide was applied in a

manner that was lawful under FIFRA, and the residues do not exceed a level that was authorized by these time-limited tolerances at the time of that application. EPA will take action to revoke these time-limited tolerances earlier if any experience with, scientific data on, or other relevant information on this pesticide indicate that the residues are not safe.

Because these time-limited tolerances are being approved under emergency conditions, EPA has not made any decisions about whether dinotefuran meets FIFRA's registration requirements for use on rice or whether permanent tolerances for this use would be appropriate. Under these circumstances, EPA does not believe that this time-limited tolerance decision serves as a basis for registration of dinotefuran by a State for special local needs under FIFRA section 24(c). Nor does this tolerance serve as the basis for persons in any State other than Texas to use this pesticide on these crops under FIFRA section 18 absent the issuance of an emergency exemption applicable within that State. For additional information regarding the emergency exemption for dinotefuran, contact the Agency's Registration Division at the address provided under **FOR FURTHER INFORMATION CONTACT**.

IV. Aggregate Risk Assessment and Determination of Safety

Section 408(b)(2)(A)(i) of FFDCA allows EPA to establish a tolerance (the legal limit for a pesticide chemical residue in or on a food) only if EPA determines that the tolerance is ''safe.'' Section 408(b)(2)(A)(ii) of FFDCA defines ''safe'' to mean that ''there is a reasonable certainty that no harm will result from aggregate exposure to the pesticide chemical residue, including all anticipated dietary exposures and all other exposures for which there is reliable information.'' This includes exposure through drinking water and in residential settings, but does not include occupational exposure. Section 408(b)(2)(C) of FFDCA requires EPA to give special consideration to exposure of infants and children to the pesticide chemical residue in establishing a tolerance and to ''ensure that there is a reasonable certainty that no harm will result to infants and children from aggregate exposure to the pesticide chemical residue....''

Consistent with the factors specified in FFDCA section 408(b)(2)(D), EPA has reviewed the available scientific data and other relevant information in support of this action. EPA has sufficient data to assess the hazards of and to make a determination on aggregate exposure expected as a result of this emergency exemption request and the time-limited tolerances for combined residues of the insecticide, dinotefuran, [*N* -methyl- *N′*-nitro- *N″* -((tetrahydro-3-furanyl)methyl)guanidine] and its metabolites DN [1-methyl-3-(tetrahydro-3-furylmethyl)guanidine] and UF [1-methyl-3-(tetrahydro-3-furylmethyl)urea], expressed as dinotefuran. EPA's assessment of exposures and risks associated with establishing time-limited tolerances follows.

A. Toxicological Endpoints

For hazards that have a threshold below which there is no appreciable risk, a toxicological point of departure (POD) is identified as the basis for derivation of reference values for risk assessment. The POD may be defined as the highest dose at which no adverse effects are observed (the NOAEL) in the toxicology study identified as appropriate for use in risk assessment. However, if a NOAEL cannot be determined, the lowest dose at which adverse effects of concern are identified (the LOAEL) or a Benchmark Dose (BMD) approach is sometimes used for risk assessment. Uncertainty/safety factors (UFs) are used in conjunction with the POD to take into account uncertainties inherent in the extrapolation from laboratory animal data to humans and in the variations in sensitivity among members of the human population as well as other unknowns. Safety is assessed for acute and chronic dietary risks by comparing aggregate food and water exposure to the pesticide to the acute population adjusted dose (aPAD) and chronic population adjusted dose (cPAD). The aPAD and cPAD are calculated by dividing the POD by all applicable UFs. Aggregate short-term, intermediate-term, and chronic-term risks are evaluated by comparing food, water, and residential exposure to the POD to ensure that the margin of exposure (MOE) called for by the product of all applicable UFs is not exceeded. This latter value is referred to as the Level of Concern (LOC).

For non-threshold risks, the Agency assumes that any amount of exposure will lead to some degree of risk. Thus, the Agency estimates risk in terms of the probability of an occurrence of the adverse effect greater than that expected in a lifetime. For more information on the general principles EPA uses in risk characterization and a complete description of the risk assessment process, see *http://www.epa.gov/pesticides/factsheets/riskassess.htm*.

A summary of the toxicological endpoints for dinotefuran used for human risk assessment can be found at *http://www.regulations.gov* in document *Section 18 Emergency Exemptions for the Use of Dinotefuran on Rice in Texas to Control Stink Bugs*, on page number 6 in docket ID number EPA–HQ–OPP–2008–0845.

B. Exposure Assessment

1. *Dietary exposure from food and feed uses*. In evaluating dietary exposure to dinotefuran, EPA considered exposure under the time-limited tolerance established by this action as well as all existing dinotefuran tolerances in 40 CFR 180.603. EPA assessed dietary exposures from dinotefuran in food as follows:

i. *Acute exposure*. In estimating acute dietary exposure, EPA used food consumption information from the United States Department of Agriculture (USDA) 1994–1996 and 1998 Nationwide Continuing Surveys of Food Intake by Individuals (CSFII). As to residue levels in food, EPA assumed 100% crop treated (PCT) and tolerance level residues.

ii. *Chronic exposure*. In conducting the chronic dietary exposure assessment EPA used the food consumption data from the USDA insert 1994–1996 and 1998 CSFII. As to residue levels in food, EPA assumed 100 PCT and tolerance level residues.

iii. *Cancer*. Dinotefuran is classified as not likely to be a carcinogen, so no dietary assessment was performed for cancer.

iv. *Anticipated residue and PCT information*. EPA did not use anticipated residue or PCT information in the dietary assessment for dinotefuran. Tolerance level residues and/or 100 PCT were assumed for all food commodities.

2. *Dietary exposure from drinking water*. The Agency used screening level water exposure models in the dietary exposure analysis and risk assessment for dinotefuran in drinking water. These simulation models take into account data on the physical, chemical, and fate/transport characteristics of dinotefuran. Further information regarding EPA drinking water models used in pesticide exposure assessment can be found at *http://www.epa.gov/oppefed1/models/water/index.htm*.

Based on the First Index Reservoir Screening Tool (FIRST) and Screening Concentration in Ground Water (SCI-GROW) models, the estimated drinking water concentrations (EDWCs) of dinotefuran for surface water, the acute and chronic total EDWCs (parent + metabolites) are 281 parts per billion

(ppb) for acute and 139 ppb for chronic, respectively. The acute and chronic ground water total EDWC (parent + metabolites) is 4.9 ppb.

3. *From non-dietary exposure*. The term ''residential exposure'' is used in this document to refer to non-occupational, non-dietary exposure (e.g., for lawn and garden pest control, indoor pest control, termiticides, and flea and tick control on pets).

Dinotefuran is currently registered for uses that could result in residential exposures during the application of products containing dinotefuran and from entering areas previously treated with dinotefuran, such as lawns where children might play, or golf courses and home gardens that could lead to exposures for adults. The Agency combines risks resulting from exposures to individual chemicals when it is likely they can occur simultaneously based on the use pattern and the behavior associated with the exposed population. For this assessment, the Agency has added together risk values for adults applying dinotefuran to residential lawns and then being exposed to the treated lawn. For children, dermal and incidental oral exposures from activities on treated lawn were combined. These are considered to represent worst case scenarios for co-occurring residential exposures. The proposed section 18 uses of dinotefuran do not add any additional residential exposures or risks.

4. *Cumulative effects from substances with a common mechanism of toxicity*. Section 408(b)(2)(D)(v) of FFDCA requires that, when considering whether to establish, modify, or revoke a tolerance, the Agency consider ''available information'' concerning the cumulative effects of a particular pesticide's residues and'' other substances that have a common mechanism of toxicity.''

EPA has not found dinotefuran to share a common mechanism of toxicity with any other substances, and dinotefuran does not appear to produce a toxic metabolite produced by other substances. For the purposes of this tolerance action, therefore, EPA has assumed that dinotefuran does not have a common mechanism of toxicity with other substances. For information regarding EPA's efforts to determine which chemicals have a common mechanism of toxicity and to evaluate the cumulative effects of such chemicals, see the policy statements released by EPA's Office of Pesticide Programs concerning common mechanism determinations and procedures for cumulating effects from substances found to have a common mechanism on EPA's website at *http://www.epa.gov/pesticides/cumulative*.

C. Safety Factor for Infants and Children

1. *In general*. Section 408(b)(2)(C) of FFDCA provides that EPA shall apply an additional tenfold (10X) margin of safety for infants and children in the case of threshold effects to account for prenatal and postnatal toxicity and the completeness of the database on toxicity and exposure unless EPA determines based on reliable data that a different margin of safety will be safe for infants and children. This additional margin of safety is commonly referred to as the FQPA safety factor (SF). In applying this provision, EPA either retains the default value of 10X, or uses a different additional SF when reliable data available to EPA support the choice of a different factor.

2. *Prenatal and postnatal sensitivity*. EPA evaluated the potential for increased susceptibility of infants and children from exposure to dinotefuran. EPA concluded that the toxicology database for dinotefuran is adequate for FQPA assessment. Available studies include developmental toxicity studies in rats and rabbits, a reproductive toxicity study in rats, and acute and subchronic neurotoxicity studies in rats. EPA concluded that there is low concern for prenatal and/or postnatal toxicity resulting from exposure to dinotefuran. However, there is a concern for neurotoxicity and developmental neurotoxicity resulting from exposure to dinotefuran, and also a concern for immunotoxicity following exposure to dinotefuran during the period of organogenesis.

3. *Conclusion*. Considering the overall toxicity profile and the doses and endpoints selected for risk assessment for dinotefuran, the EPA characterized the degree of concern for the effects observed in the rat reproduction study as low, noting these effects occurred in the presence of parental toxicity and only at the highest dose tested. For all toxicity endpoints established for dinotefuran, a NOAEL lower than this offspring NOAEL is used. No residual uncertainties were identified.

The absence of a NOAEL for the chronic dog study and the need for a developmental immunotoxicity (DIT) study generate some uncertainty regarding the protectiveness of the chronic regulatory endpoint and long-term LOC. Accordingly, EPA does not have reliable data supporting adoption of a safety factor other than the default additional 10x factor as specified in FFDCA section 408(b)(2)(C). The chronic endpoint and long-term LOC have therefore been generated using an overall safety/uncertainty factor of 1,000 (representing 100x for inter-species extrapolation and intra-species variation, and an additional 10x pursuant to FFDCA section 408(b)(2)(C), i.e., use of a LOAEL). However, the Agency does not have similar concerns regarding acute, short-term, and intermediate-term risk assessments, since the absence of a NOAEL only occurred in a chronic study.

EPA concluded that there is concern for developmental neurotoxicity following exposure to dinotefuran, and recommended that a developmental neurotoxicity (DNT) study in rats be conducted. However, EPA determined that a database uncertainty factor (UFDB) is not needed to account for the lack of the DNT study. The Agency believes there are reliable data showing that the regulatory endpoints are protective of children despite the need for a developmental neurotoxicity study. Developmental neurotoxicity data received and reviewed for other compounds in this chemical class (i.e., neonicotinoids) including thiacloprid, clothianidin, and imidacloprid, indicate that the results of the required DNT study will not likely impact the regulatory doses selected for dinotefuran.

EPA also concluded that there is a concern for immunotoxicity following exposure to dinotefuran during the period of organogenesis. This concern was based on the decreases in absolute and adjusted thymus and spleen weights observed in several species in various studies. In addition, the available data indicate that the juvenile rats appeared to be more sensitive/susceptible to these effects than adults in the 2–generation reproduction study. Therefore, EPA recommended that testing be conducted to assess immune system function in adults and young animals following exposure during the period of organogenesis. A protocol for this testing was developed by the registrant and these studies are now ongoing.

D. Aggregate Risks and Determination of Safety

EPA determines whether acute and chronic pesticide exposures are safe by comparing aggregate exposure estimates to the aPAD and cPAD. The aPAD and cPAD represent the highest safe exposures, taking into account all appropriate SFs. EPA calculates the aPAD and cPAD by dividing the POD by all applicable UFs. For linear cancer risks, EPA calculates the probability of additional cancer cases given the estimated aggregate exposure. Short-term, intermediate-term, and chronic-

term risks are evaluated by comparing the estimated aggregate food, water, and residential exposure to the POD to ensure that the MOE called for by the product of all applicable UFs is not exceeded.

1. *Acute risk*. The aggregate acute risk estimates include exposure to residues of dinotefuran in food and drinking water. Since the acute dietary exposure assessment already includes the highest acute exposure from the drinking water modeling data, no further calculations are necessary. The acute risk estimate for all populations, resulting from aggregate exposure to dinotefuran in food and drinking water is below EPA's LOC. The food and drinking water exposure estimates for the most highly exposed subgroup, children 1–2 yrs old, is 4.4% of the aPAD.

2. *Chronic risk*. The aggregate chronic risk estimates include exposure to residues of dinotefuran in food and drinking water. Since the chronic dietary exposure assessment already includes the highest chronic exposure from the drinking water modeling data, no further calculations are necessary. The EPA concluded that dinotefuran exposure from food consumption will utilize 42% of the cPAD for the general U. S. population and 86% for children 1–2 years old, the most sensitive subgroup. Dinotefuran is not expected to pose a chronic dietary risk for the general population (including children and infants). The chronic risk estimate for all populations, resulting from aggregate exposure to dinotefuran in food and drinking water is below EPA's LOC.

3. *Short-term risk*. Short-term aggregate exposure takes into account short-term residential exposure plus chronic exposure to food and water (considered to be a background exposure level). Because there are existing residential uses of dinotefuran, short-term aggregate risk assessments based on exposure from oral, inhalation, and dermal routes were considered. However, the toxicological effects for oral and inhalation routes of exposure are different (i.e., neurotoxicity for oral and decrease in body weight for inhalation); and therefore, these exposure scenarios have not been combined. Also, because no systemic toxicity was seen at the limit dose in a 28–day dermal toxicity study, no quantification of short-term dermal risk is required. Therefore, a short-term aggregate risk assessment was not performed. An intermediate-term aggregate risk assessment was performed as a screening level assessment, which will apply to short-term aggregate risk.

4. *Intermediate-term risk*. An intermediate-term aggregate risk assessment was performed as a screening level assessment. Intermediate-term aggregate risk assessments were performed for adults and children. For children, the subgroup with the highest estimated chronic dietary exposure (children 1–2 years old) was aggregated with residential exposures to children playing on treated lawns (dermal and oral hand-to-mouth exposures) in order to calculate the worst case intermediate-term aggregate risk to children. The reciprocal MOE method was used to conduct the intermediate-term aggregate risk assessment for children, since the LOCs are identical for all MOEs in the calculation. For adults, the aggregate risk index (ARI) method was used, since LOC are not identical for all types of exposure in the calculation. For children, the aggregate MOE is 400 which is greater than 100, and therefore does not exceed EPA's LOC. For adults, the total aggregate ARI is 5.5 which is greater than 1, and therefore does not exceed EPA's LOC.

5. *Determination of safety*. Based on these risk assessments, EPA concludes that there is a reasonable certainty that no harm will result to the general population, or to infants and children, from aggregate exposure to dinotefuran residues.

V. Other Considerations

A. Analytical Enforcement Methodology

Adequate enforcement methodology (for plant commodities (High Performance Liquid Chromatography (HPLC)/Mass Spectrometry (MS); HPLC/Ultraviolet (UV); and HPLC/MS/MS)) is available to enforce the tolerance expression. The method may be requested from: Chief, Analytical Chemistry Branch, Environmental Science Center, 701 Mapes Rd., Ft. Meade, MD 20755–5350; telephone number: (410) 305–2905; e-mail address: *residuemethods@epa.gov.*

B. International Residue Limits

There are currently no established Codex, Canadian, or Mexican maximum residue limits for residues of dinotefuran in/on plant or livestock commodities.

VI. Conclusion

Therefore, time-limited tolerances are established for combined residues of the insecticide, dinotefuran, [*N* -methyl- *N* ′-nitro- *N*″ -((tetrahydro-3-furanyl)methyl)guanidine] and its metabolites DN [1-methyl-3-(tetrahydro-3-furylmethyl)guanidine] and UF [1-methyl-3-(tetrahydro-3-furylmethyl)urea], expressed as dinotefuran, in or on rice, grain at 2.8 parts per million (ppm). These tolerances expire and are revoked on December 31, 2011.

VII. Statutory and Executive Order Reviews

This final rule establishes tolerances under sections 408(e) and 408(l)(6) of FFDCA in response to a petition submitted to the Agency. The Office of Management and Budget (OMB) has exempted these types of actions from review under Executive Order 12866, entitled *Regulatory Planning and Review* (58 FR 51735, October 4, 1993). Because this final rule has been exempted from review under Executive Order 12866, this final rule is not subject to Executive Order 13211, entitled *Actions Concerning Regulations That Significantly Affect Energy Supply, Distribution, or Use* (66 FR 28355, May 22, 2001) or Executive Order 13045, entitled *Protection of Children from Environmental Health Risks and Safety Risks* (62 FR 19885, April 23, 1997). This final rule does not contain any information collections subject to OMB approval under the Paperwork Reduction Act (PRA), 44 U.S.C. 3501 *et seq.*, nor does it require any special considerations under Executive Order 12898, entitled *Federal Actions to Address Environmental Justice in Minority Populations and Low-Income Populations* (59 FR 7629, February 16, 1994).

Since tolerances and exemptions that are established in accordance with sections 408(e) and 408(l)(6) of FFDCA, such as the tolerances in this final rule, do not require the issuance of a proposed rule, the requirements of the Regulatory Flexibility Act (RFA) (5 U.S.C. 601 *et seq.*) do not apply.

This final rule directly regulates growers, food processors, food handlers, and food retailers, not States or tribes, nor does this action alter the relationships or distribution of power and responsibilities established by Congress in the preemption provisions of section 408(n)(4) of FFDCA. As such, the Agency has determined that this action will not have a substantial direct effect on States or tribal governments, on the relationship between the national government and the States or tribal governments, or on the distribution of power and responsibilities among the various levels of government or between the Federal Government and Indian tribes. Thus, the Agency has determined that Executive Order 13132, entitled *Federalism* (64 FR 43255, August 10, 1999) and Executive Order 13175,

entitled *Consultation and Coordination with Indian Tribal Governments* (65 FR 67249, November 9, 2000) do not apply to this final rule. In addition, this final rule does not impose any enforceable duty or contain any unfunded mandate as described under Title II of the Unfunded Mandates Reform Act of 1995 (UMRA) (Public Law 104–4).

This action does not involve any technical standards that would require Agency consideration of voluntary consensus standards pursuant to section 12(d) of the National Technology Transfer and Advancement Act of 1995 (NTTAA), Public Law 104–113, section 12(d) (15 U.S.C. 272 note).

VIII. Congressional Review Act

The Congressional Review Act, 5 U.S.C. 801 *et seq.*, generally provides that before a rule may take effect, the agency promulgating the rule must submit a rule report to each House of the Congress and to the Comptroller General of the United States. EPA will submit a report containing this rule and other required information to the U.S. Senate, the U.S. House of Representatives, and the Comptroller General of the United States prior to publication of this final rule in the **Federal Register**. This final rule is not a ''major rule'' as defined by 5 U.S.C. 804(2).

List of Subjects in 40 CFR Part 180

Environmental protection, Administrative practice and procedure, Agricultural commodities, Pesticides and pests, Reporting and recordkeeping requirements.

Dated: February 24, 2009.

Lois Rossi,

Director, Registration Division, Office of Pesticide Programs.

■ Therefore, 40 CFR chapter I is amended as follows:

PART 180—[AMENDED]

■ 1. The authority citation for part 180 continues to read as follows:

Authority: 21 U.S.C. 321(q), 346a and 371.

■ 2. Section 180.603 is amended by revising paragraph (b) to read as follows:

§ 180.603 Dinotefuran; tolerances for residues.

* * * * *

(b) *Section 18 emergency exemptions.* Time-limited tolerances specified in the following table are established for combined residues of Dinotefuran, [*N* -methyl- *N′*-nitro- *N″* -((tetrahydro-3-furanyl)methyl)guanidine] and its metabolites DN [1-methyl-3-(tetrahydro-3-furylmethyl)guanidine] and UF [1-methyl-3-(tetrahydro-3-furylmethyl)urea], expressed as dinotefuran in or on the specified agricultural commodities, resulting from use of the pesticide pursuant to FFIFRA section 18 emergency exemptions. The tolerances expire and are revoked on the date specified in the table.

Commodity	Parts per million	Expiration/ revocation date
Rice, grain	2.8	12/31/09

* * * * *

[FR Doc. E9–6253 Filed 3–24–09; 8:45 am]

BILLING CODE 6560–50–S

ENVIRONMENTAL PROTECTION AGENCY

40 CFR Part 180

[EPA–HQ–OPP–2006-0875; FRL–8400–8]

Fenpropathrin; Pesticide Tolerances

AGENCY: Environmental Protection Agency (EPA).

ACTION: Final rule.

SUMMARY: This regulation establishes tolerances for residues of fenpropathrin in or on almond, hulls at 4.5 parts per million (ppm); cherry, sweet, at 5.0 ppm; cherry, tart at 5.0 ppm; fruit, stone, crop group 12 (except cherry) at 1.4 ppm; nuts, tree, crop group 14 at 0.10 ppm; pistachio at 0.10 ppm, PP 4E6867; avocado at 1.0 ppm; black sapote at 1.0 ppm; canistel at 1.0 ppm; maney sapote at 1.0 ppm; mango at 1.0 ppm; papaya at 1.0 ppm; sapodilla at 1.0 ppm; star apple at 1.0 ppm, PP 6E7066; caneberry, subgroup 13-07A at 12 ppm; and olive at 5.0 ppm, PP 7E7298. In addition, the Agency is deleting a time-limited tolerance on currant at 15 ppm which had an expiration date of 12/31/2008. The Interregional Research Project Number 4 (IR-4) requested these tolerances under the Federal Food, Drug, and Cosmetic Act (FFDCA).

DATES: This regulation is effective March 25, 2009. Objections and requests for hearings must be received on or before May 26, 2009, and must be filed in accordance with the instructions provided in 40 CFR part 178 (see also Unit I.C. of the **SUPPLEMENTARY INFORMATION**).

ADDRESSES: EPA has established a docket for this action under docket identification (ID) number EPA–HQ–OPP–2006–0875. All documents in the docket are listed in the docket index available at *http://www.regulations.gov*. Although listed in the index, some information is not publicly available, e.g., Confidential Business Information (CBI) or other information whose disclosure is restricted by statute. Certain other material, such as copyrighted material, is not placed on the Internet and will be publicly available only in hard copy form. Publicly available docket materials are available in the electronic docket at *http://www.regulations.gov*, or, if only available in hard copy, at the OPP Regulatory Public Docket in Rm. S–4400, One Potomac Yard (South Bldg.), 2777 S. Crystal Dr., Arlington, VA. The Docket Facility is open from 8:30 a.m. to 4 p.m., Monday through Friday, excluding legal holidays. The Docket Facility telephone number is (703) 305–5805.

FOR FURTHER INFORMATION CONTACT: Sidney Jackson, Registration Division (7505P), Office of Pesticide Programs, Environmental Protection Agency, 1200 Pennsylvania Ave., NW., Washington, DC 20460–0001; telephone number: (703) 305–7610; e-mail address: *jackson.sidney@epa.gov*.

SUPPLEMENTARY INFORMATION:

I. General Information

A. Does this Action Apply to Me?

You may be potentially affected by this action if you are an agricultural producer, food manufacturer, or pesticide manufacturer. Potentially affected entities may include, but are not limited to those engaged in the following activities:

- Crop production (NAICS code 111).
- Animal production (NAICS code 112).
- Food manufacturing (NAICS code 311).
- Pesticide manufacturing (NAICS code 32532).

This listing is not intended to be exhaustive, but rather to provide a guide for readers regarding entities likely to be affected by this action. Other types of

entities not listed in this unit could also be affected. The North American Industrial Classification System (NAICS) codes have been provided to assist you and others in determining whether this action might apply to certain entities. If you have any questions regarding the applicability of this action to a particular entity, consult the person listed under **FOR FURTHER INFORMATION CONTACT**.

B. How Can I Access Electronic Copies of this Document?

In addition to accessing electronically available documents at *http://www.regulations.gov*, you may access this **Federal Register** document electronically through the EPA Internet under the ''**Federal Register**'' listings at *http://www.epa.gov/fedrgstr*. You may also access a frequently updated electronic version of EPA's tolerance regulations at 40 CFR part 180 through the Government Printing Office's e-CFR cite at *http://www.gpoaccess.gov/ecfr*.

C. Can I File an Objection or Hearing Request?

Under section 408(g) of FFDCA, 21 U.S.C. 346a, any person may file an objection to any aspect of this regulation and may also request a hearing on those objections. You must file your objection or request a hearing on this regulation in accordance with the instructions provided in 40 CFR part 178. To ensure proper receipt by EPA, you must identify docket ID number EPA–HQ–OPP–2006–0875 in the subject line on the first page of your submission. All requests must be in writing, and must be mailed or delivered to the Hearing Clerk as required by 40 CFR part 178 on or before May 26, 2009

In addition to filing an objection or hearing request with the Hearing Clerk as described in 40 CFR part 178, please submit a copy of the filing that does not contain any CBI for inclusion in the public docket that is described in **ADDRESSES**. Information not marked confidential pursuant to 40 CFR part 2 may be disclosed publicly by EPA without prior notice. Submit this copy, identified by docket ID number EPA–HQ–OPP–2006–0875, by one of the following methods:

• *Federal eRulemaking Portal*: *http://www.regulations.gov*. Follow the on-line instructions for submitting comments.

• *Mail*: Office of Pesticide Programs (OPP) Regulatory Public Docket (7502P), Environmental Protection Agency, 1200 Pennsylvania Ave., NW., Washington, DC 20460–0001.

• *Delivery*: OPP Regulatory Public Docket (7502P), Environmental Protection Agency, Rm. S–4400, One Potomac Yard (South Bldg.), 2777 S. Crystal Dr., Arlington, VA. Deliveries are only accepted during the Docket Facility's normal hours of operation (8:30 a.m. to 4 p.m., Monday through Friday, excluding legal holidays). Special arrangements should be made for deliveries of boxed information. The Docket Facility telephone number is (703) 305–5805.

II. Petitioned for Tolerance

In the **Federal Register** of November 15, 2006, (71 FR 66520) (FRL–8102–5), and February 6, 2008 (73 FR 6964) (FRL–8350–9), EPA issued a notice pursuant to section 408(d)(3) of FFDCA, 21 U.S.C. 346a(d)(3), announcing the filing of pesticide petitions (PP 4E6867, 6E7066, and 7E7298) by IR-4, 500 College Rd. East, Suite 201 W, Princeton, NJ 08540. The petitions requested that 40 CFR 180.466 be amended by establishing tolerances for residues of the insecticide, fenpropathrin, (alpha-cyano-3-phenoxy-benzyl 2,2,3,3-tetramethylcyclopropanecarboxylate), in or on fruit, stone, group 12 (except cherry) at 5.0 ppm; nut, tree, group 14 at 0.10 ppm, pistachio at 0.10 ppm, and almond hulls at 5.0 ppm, PP 4E6867; avocado, black sapote, canistel, mamey sapote, mango, papaya, sapodilla, star apple at 1.0 ppm; barley, grain at 0.30 ppm; barley, hay at 2.5 ppm; and barley, straw at 4.5 ppm, PP 6E7066; caneberry subgroup 13-07A at 12 ppm and olives at 5 ppm, PP 7E7298. That notice referenced a summary of the petition prepared by Valent, U.S.A., the registrant, which is available to the public in the docket, *http://www.regulations.gov*. There were no comments received in response to the notice of filings.

Based upon review of the data supporting the petitions listed in this Unit, EPA has made certain modifications including revisions to proposed tolerance levels, scope of proposed crop groups, existing tolerance levels, proposed commodity definitions, as follows: Changed the proposed tolerance for fruit, stone, group 12 to fruit, stone, group 12 (except cherry) and revised the tolerance level from 5.0 to 1.4 ppm; established an individual tolerance for cherry, sweet at 5.0 ppm, and cherry, tart at 5.0 ppm; changed the proposed tolerance for nut, tree, group 14 (including pistachio) to nut, tree, group 14; established an individual tolerance for pistachio at 0.10 ppm; revised the tolerance level for almond, hulls from 5.0 to 4.5 ppm, and corrected the commodity definition for caneberry, subgroup 13-07A. Additionally, at this time, the Agency is not making a decision on the proposed tolerances for barley, grain at 0.30 ppm, barley, hay at 2.5 ppm, and barley, straw at 4.5 ppm pending submission and review of a barley processing study. The reasons for these changes are explained in Unit IV.D.

III. Aggregate Risk Assessment and Determination of Safety

Section 408(b)(2)(A)(i) of FFDCA allows EPA to establish a tolerance (the legal limit for a pesticide chemical residue in or on a food) only if EPA determines that the tolerance is ''safe.'' Section 408(b)(2)(A)(ii) of FFDCA defines ''safe'' to mean that ''there is a reasonable certainty that no harm will result from aggregate exposure to the pesticide chemical residue, including all anticipated dietary exposures and all other exposures for which there is reliable information.'' This includes exposure through drinking water and in residential settings, but does not include occupational exposure. Section 408(b)(2)(C) of FFDCA requires EPA to give special consideration to exposure of infants and children to the pesticide chemical residue in establishing a tolerance and to ''ensure that there is a reasonable certainty that no harm will result to infants and children from aggregate exposure to the pesticide chemical residue.''

Consistent with section 408(b)(2)(D) of FFDCA, and the factors specified in section 408(b)(2)(D) of FFDCA, EPA has reviewed the available scientific data and other relevant information in support of this action. EPA has sufficient data to assess the hazards of, and to make a determination on, aggregate exposure for the petitioned-for tolerances for residues of fenpropathrin in or on almond, hulls at 4.5 ppm; cherry, sweet at 5.0 ppm; cherry, tart at 5.0 ppm; fruit, stone, group 12 at 1.4 ppm; nut, tree, group 14 at 0.10 ppm; avocado at 1.0 ppm; black sapote at 1.0 ppm; canistel at 1.0 ppm; maney sapote at 1.0 ppm; mango at 1.0 ppm; papaya at 1.0 ppm; sapodilla at 1.0 ppm; star apple at 1.0; caneberry, subgroup 13-07A at 12 ppm; olive at 5.0 ppm; and pistachio at 0.10 ppm. EPA's assessment of exposures and risks associated with establishing tolerances follows.

A. Toxicological Profile

The database for fenpropathrin is not complete, but it does provide adequate information to characterize toxicity. Acute neurotoxicity, subchronic neurotoxicity, and developmental neurotoxicity studies have been submitted and reviewed since the previous risk assessment. These studies were classified acceptable/guideline and

were considered during endpoint selection.

Fenpropathrin exhibits high toxicity through the oral and dermal routes of exposure. Acute inhalation toxicity has not been determined for fenpropathrin. Because of the chemical's low vapor pressure, sufficient test material could not be generated to elicit a toxic response during the inhalation studies. Fenpropathrin is a mild eye irritant, but does not cause dermal irritation in rabbits or skin sensitization in guinea pigs.

Clinical signs of toxicity observed in rats and dogs following subchronic exposure included tremors, ataxia, salivation, and hypersensitivity. Decreased body weights and food consumption are more general responses to dietary consumption in rats and dogs. Pregnant rabbits exposed to fenpropathrin during a developmental study also exhibited neurotoxic signs including tremors, shakiness, unsteadiness, and flicking limbs.

Chronic dietary exposure to fenpropathrin produced no treatment-related effects in mice. Following chronic exposure, rats and dogs showed evidence of neurotoxicity that was consistent with the effects that were seen after subchronic exposures. There was no evidence of carcinogenicity in either the rat or mouse long-term dietary studies. Fenpropathrin is not mutagenic in bacteria or cultured mammalian cells. This chemical is neither clastogenic nor damaging to DNA. Fenpropathrin is classified as ''not likely to be carcinogenic to humans.''

Developmental studies in rats and rabbits showed no evidence of increased susceptibility in fetuses as compared to maternal animals following exposure to fenpropathrin in utero. Maternal animals of both species exhibited clinical signs of neurotoxicity. In rats, reduced body weight gains were also present. In neither study did dose-related changes in fecundity, fertility, implantations, number of abortions, or early or late resorptions occur. The only anomaly noted for either species was an increased incidence of asymmetrical or incomplete ossification of the fifth or sixth sternebrae in rat fetuses. A two-generation reproduction study in rats, likewise, did not show an increased sensitivity to fenpropathrin in pups as compared to adults.

EPA has evaluated the available toxicity data and considered their validity, completeness, and reliability as well as the relationship of the results of the studies to human risk. EPA has also considered available information concerning the variability of the sensitivities of major identifiable subgroups of consumers, including infants and children. Specific information on the studies received and the nature of the adverse effects caused by fenpropathrin as well as the no-observed-adverse-effect-level (NOAEL) and the lowest-observed-adverse-effect-level (LOAEL) from the toxicity studies can be found at *http://www.regulations.gov* in document ''Fenpropathrin. Human health risk assessment for the proposed uses on barley, stone fruit (Crop Group 12), tree nuts (Crop Group 14), pistachio, caneberries (Crop Subgroup 13-07A), and star apple, dated 11/26/2008'', page 13 in docket ID number EPA–HQ–OPP–2006–0875–0005.

B. Toxicological Endpoints

For hazards that have a threshold below which there is no appreciable risk, a toxicological point of departure (POD) is identified as the basis for derivation of reference values for risk assessment. The POD may be defined as the highest dose at which no adverse effects are observed (the NOAEL) in the toxicology study identified as appropriate for use in risk assessment. However, if a NOAEL cannot be determined, the lowest dose at which adverse effects of concern are identified (the LOAEL) or a Benchmark Dose (BMD) approach is sometimes used for risk assessment. Uncertainty/safety factors (UFs) are used in conjunction with the POD to take into account uncertainties inherent in the extrapolation from laboratory animal data to humans and in the variations in sensitivity among members of the human population as well as other unknowns. Safety is assessed for acute and chronic dietary risks by comparing aggregate food and water exposure to the pesticide to the acute population adjusted dose (aPAD) and chronic population adjusted dose (cPAD). The aPAD and cPAD are calculated by dividing the POD by all applicable UFs. Aggregate short-, intermediate-, and chronic-term risks are evaluated by comparing food, water, and residential exposure to the POD to ensure that the margin of exposure (MOE) called for by the product of all applicable UFs is not exceeded. This latter value is referred to as the level of concern (LOC).

For non-threshold risks, the Agency assumes that any amount of exposure will lead to some degree of risk. Thus, the Agency estimates risk in terms of the probability of an occurrence of the adverse effect greater than that expected in a lifetime. For more information on the general principles EPA uses in risk characterization and a complete description of the risk assessment process, see *http://www.epa.gov/pesticides/factsheets/riskassess.htm*.

A summary of the toxicological endpoints for fenpropathrin used for human risk assessment can be found at *http://www.regulations.gov* in document ''Fenpropathrin. Human health risk assessment for the proposed uses on barley, stone fruit (Crop Group 12), tree nuts (Crop Group 14), pistachio, caneberries (Crop Subgroup 13-07A), and star apple, dated 11/26/2008, page 19 in docket ID number EPA–HQ–OPP–2006–0875–0005.

C. Exposure Assessment

1. *Dietary exposure from food and feed uses*. In evaluating dietary exposure to fenpropathrin, EPA considered exposure under the petitioned-for tolerances as well as all existing fenpropathrin tolerances in (40 CFR 180.466). EPA assessed dietary exposures from fenpropathrin in food as follows:

i. *Acute exposure*. Quantitative acute dietary exposure and risk assessments are performed for a food-use pesticide, if a toxicological study has indicated the possibility of an effect of concern occurring as a result of a 1–day or single exposure.

Acute dietary exposure assessments were conducted using the Dietary Exposure Evaluation Model (DEEM-FCID, Version 2.03), which uses food consumption information from the United States Department of Agriculture (USDA) 1994–1996 and 1998 Nationwide Continuing Surveys of Food Intake by Individuals (CSFII). A partially refined acute probabilistic dietary exposure analysis was performed for fenpropathrin. As to residue levels in food, EPA's analysis was based on tolerance level residues for some commodities, crop field trial data (only for apricots, nectarines, apples, cherries, grapes, peaches, pears, and plums), processing factors, and the assumption of 100% percent crop treated for all registered and proposed commodity uses. As a result, the Agency considers these analyses to be refined, but not highly refined.

ii. *Chronic exposure*. Chronic dietary exposure assessments were conducted using the DEEM-FCID, (Version 2.03), which uses food consumption data from the USDA 1994–1996 and 1998 CSFII. As to residue levels in food, EPA's analysis was based on tolerance level residues for some commodities, crop field trial data (only for apricots, nectarines, apples, cherries, grapes, peaches, pears, and plums), processing factors, and the assumption of 100% percent crop treated for all registered and proposed commodity uses. As a

result, the Agency considers these analyses to be refined, but not highly refined.

iii. *Cancer*. An exposure assessment to evaluate cancer risk is unnecessary. There is no evidence of carcinogenicity in either the rat or mouse long-term dietary studies. Fenpropathrin is not mutagenic in bacteria or cultured mammalian cells. The chemical is neither clastogenic nor damaging to DNA. Fenpropathrin is classified as ''not likely to be carcinogenic to humans.''

iv. *Anticipated residue and percent crop treated (PCT) information*. Section 408(b)(2)(E) of FFDCA authorizes EPA to use available data and information on the anticipated residue levels of pesticide residues in food and the actual levels of pesticide residues that have been measured in food. If EPA relies on such information, EPA must require pursuant to FFDCA section 408(f)(1) that data be provided 5 years after the tolerance is established, modified, or left in effect, demonstrating that the levels in food are not above the levels anticipated. For the present action, EPA will issue such data call-ins as are required by FFDCA section 408(b)(2)(E) and authorized under FFDCA section 408(f)(1). Data will be required to be submitted no later than 5 years from the date of issuance of these tolerances.

Section 408(b)(2)(F) of FFDCA states that the Agency may use data on the actual percent of food treated for assessing chronic dietary risk only if:

• Condition a: The data used are reliable and provide a valid basis to show what percentage of the food derived from such crop is likely to contain the pesticide residue.

• Condition b: The exposure estimate does not underestimate exposure for any significant subpopulation group.

• Condition c: Data are available on pesticide use and food consumption in a particular area, the exposure estimate does not understate exposure for the population in such area.

In addition, the Agency must provide for periodic evaluation of any estimates used. To provide for the periodic evaluation of the estimate of PCT as required by FFDCA section 408(b)(2)(F), EPA may require registrants to submit data on PCT.

The Agency used PCT information as follows:

The assumption of 100% PCT was made for all registered and proposed commodity uses.

2. *Dietary exposure from drinking water*. The Agency used screening level water exposure models in the dietary exposure analysis and risk assessment for fenpropathrin in drinking water. These simulation models take into account data on the physical, chemical, and fate/transport characteristics of fenpropathrin. Further information regarding EPA drinking water models used in pesticide exposure assessment can be found at *http://www.epa.gov/oppefed1/models/water/index.htm*.

Based on the First Index Reservoir Screening Tool (FIRST) Model for surface water and Screening Concentration in Ground Water (SCI-GROW) Model for ground water, the estimated drinking water concentrations (EWDC) of fenpropathrin for acute exposures are estimated to be 10.3 parts per billion (ppb) for surface water and 0.005 ppb for ground water. The EWDCs for chronic exposures is estimated to be 1.81 ppb for surface water and 0.005 ppb for ground water.

Modeled estimates of drinking water concentrations were directly entered into the DEEM-FCID. For acute dietary risk assessment, the peak water concentration value of 10.3 ppb was used to assess the contribution of drinking water. For chronic dietary risk assessment, the annual average concentration of 1.8 ppb was used to assess the contribution of drinking water.

3. *From non-dietary exposure*. The term ''residential exposure'' is used in this document to refer to non-occupational, non-dietary exposure (e.g., for lawn and garden pest control, indoor pest control, termiticides, and flea and tick control on pets).

Fenpropathrin is not registered for any specific use patterns that would result in residential exposure. No new residential uses are associated with the petitioned-for tolerances.

4. *Cumulative effects from substances with a common mechanism of toxicity*. Section 408(b)(2)(D)(v) of FFDCA requires that, when considering whether to establish, modify, or revoke a tolerance, the Agency considers ''available information'' concerning the cumulative effects of a particular pesticide's residues and ''other substances that have a common mechanism of toxicity.''

EPA has not found fenpropathrin to share a common mechanism of toxicity with any other substances, and fenpropathrin does not appear to produce a toxic metabolite produced by other substances.

Fenpropathrin is a member of the pyrethroid class of pesticides. Although all pyrethroids alter nerve function by modifying the normal biochemistry and physiology of nerve membrane sodium channels, EPA is not currently following a cumulative risk approach based on a common mechanism of toxicity for the pyrethroids. Although all pyrethroids interact with sodium channels, there are multiple types of sodium channels and it is currently unknown whether the pyrethroids have similar effects on all channels. The Agency does not have a clear understanding of effects on key downstream neuronal function, e.g., nerve excitability, nor does it understand how these key events interact to produce their compound-specific patterns of neurotoxicity. There is ongoing research by EPA and pyrethroid registrants to evaluate the differential biochemical and physiological actions of pyrethroids in mammals. When the results of the research are available, the Agency will consider this research and make a determination of common mechanism as a basis for assessing cumulative risk. Information regarding EPA's procedures for cumulating effects from substances found to have a common mechanism can be found on EPA's website at *http://www.epa.gov/pesticides/cumulative/*.

D. Safety Factor for Infants and Children

1. *In general*. Section 408(b)(2)(c) of FFDCA provides that EPA shall apply an additional tenfold (10X) margin of safety for infants and children in the case of threshold effects to account for prenatal and postnatal toxicity and the completeness of the database on toxicity and exposure unless EPA determines based on reliable data that a different margin of safety will be safe for infants and children. This additional margin of safety is commonly referred to as the Food Quality Protection Act (FQPA) safety factor (SF). In applying this provision, EPA either retains the default value of 10X, or uses a different additional safety factor when reliable data available to EPA support the choice of a different factor.

2. *Prenatal and postnatal sensitivity*. There are no concerns or residual uncertainties for pre-and/or post-natal toxicity resulting from exposure to fenpropathrin. There is no evidence (qualitative or quantitative) of increased susceptibility following *in utero* and/or pre-natal or post-natal exposure in adequate developmental toxicity studies in rats or rabbits, a 2-generation reproduction study in rats, and a developmental neurotoxicity study in rats.

3. *Conclusion*. EPA has determined that reliable data show the safety of infants and children would be adequately protected if the FQPA SF were reduced to 1X. That decision is based on the following findings:

i. The toxicity database for fenpropathrin is adequate for FQPA

determination. The database for fenpropathrin is not complete, but it does provide adequate information to characterize toxicity/endpoint selection for infants and children including acceptable acute neurotoxicity, subchronic neurotoxicity, and developmental neurotoxicity studies. Based on recently revised EPA Part 158 Guidelines, an immunotoxicology study in rats must be submitted to the Agency. However, because there was no indication of immunotoxicity in the toxicity database, an additional 10x database uncertainty factor is not considered necessary in order to be protective of potential immunotoxic effects.

ii. The toxicity data, including a developmental neurotoxicity study, showed no increase in qualitative or quantitative susceptibility in fetuses and pups with *in utero* and/or post-natal exposure to fenpropathrin.

iii. There are no residual uncertainties identified in the exposure databases. Dietary food exposure assessments were performed based on 100% PCT, tolerance-level residues for existing and proposed uses, and field trial data. The exposure databases (dietary food and drinking water) are complete and the exposure assessment for each potential exposure scenario includes all metabolites and/or degradates of concern and does not underestimate the potential exposure for infants and children. EPA made conservative (protective) assumptions in the ground and surface water modeling used to assess exposure to fenpropathrin in drinking water. These assessments will not underestimate the exposure and risks posed by fenpropathrin.

E. Aggregate Risks and Determination of Safety

EPA determines whether acute and chronic pesticide exposures are safe by comparing aggregate exposure estimates to the aPAD and cPAD. The aPAD and cPAD represent the highest safe exposures, taking into account all appropriate SFs. EPA calculates the aPAD and cPAD by dividing the POD by all applicable UFs. For linear cancer risks, EPA calculates the probability of additional cancer cases given the estimated aggregate exposure. Short-, intermediate-, and chronic-term risks are evaluated by comparing the estimated aggregate food, water, and residential exposure to the POD to ensure that the MOE called for by the product of all applicable UFs is not exceeded.

1. *Acute risk.* An acute aggregate risk assessment takes into account exposure estimates from acute dietary consumption of food and drinking water. Dietary (food + water) consumption is the only source of exposure to fenpropathrin that is expected to result in acute exposure. Therefore, the acute aggregate risk estimates are equivalent to the acute dietary exposure discussed in Unit III. Acute aggregate risk is below EPA's level of concern for the general U.S. population and all population subgroups. Using the exposure assumptions discussed in this unit for acute exposure, the acute dietary exposure from food and water to fenpropathrin will occupy 53% of the aPAD for children 1-2 years, the population group receiving the greatest exposure.

2. *Chronic risk.* Using the exposure assumptions described in this unit for chronic exposure, EPA has concluded that chronic exposure to fenpropathrin from food and water will utilize 41% of the cPAD for children 1-2 years, the population group receiving the greatest exposure. There are no residential uses for fenpropathrin.

3. *Short-term risk.* Short-term aggregate exposure takes into account short-term residential exposure plus chronic exposure to food and water (considered to be a background exposure level).

Fenpropathrin is not registered for any use patterns that would result in residential exposure. Therefore, the short-term aggregate risk is the sum of the risk from exposure to fenpropathrin through food and water and will not be greater than the chronic aggregate risk.

4. *Intermediate-term risk.* Intermediate-term aggregate exposure takes into account intermediate-term residential exposure plus chronic exposure to food and water (considered to be a background exposure level).

Fenpropathrin is not registered for any use patterns that would result in intermediate-term residential exposure. Therefore, the intermediate-term aggregate risk is the sum of the risk from exposure to fenpropathrin through food and water, which has already been addressed, and will not be greater than the chronic aggregate risk.

5. *Aggregate cancer risk for U.S. population.* Aggregate cancer risk is not a concern because fenpropathrin is classified as ''not likely to be carcinogenic to humans.''

6. *Determination of safety.* Based on these risk assessments, EPA concludes that there is a reasonable certainty that no harm will result to the general population, or to infants and children from aggregate exposure to fenpropathrin residues.

IV. Other Considerations

A. Analytical Enforcement Methodology

There are adequate enforcement methods for fenpropathrin. The methods use gas chromatography using an electron capture detector (GC/ECD), for the determination of fenpropathrin residues in/on plants (RM-22-4, revised 5/3/93) and animals (RM-22A-1). The limit of detection (LOD) for Method RM-22-4 is 0.01 ppm.

The methods may be requested from: Chief, Analytical Chemistry Branch, Environmental Science Center, 701 Mapes Rd., Ft. Meade, MD 20755–5350; telephone number: (410) 305–2905; e-mail address: *residuemethods@epa.gov*.

B. International Residue Limits

Codex and Mexican maximum residue limits (MRLs) are established for residues of fenpropathrin, but no limits are listed for the crop commodities addressed herein. No Canadian MRLs are established for fenpropathrin.

C. Revisions to Petitioned-For Tolerances

Based upon review of available data supporting these petitions, EPA revised the tolerance levels, added or deleted tolerances, corrected commodity definitions, or otherwise modified the petitions as proposed in the notice of filings, as follows:

- EPA did not include cherries in the proposed tolerance on fruit, stone, crop group 12 because of the significant difference in residue levels on cherries compared to other commodities in the crop group. Instead, EPA established an individual tolerance for cherry, sweet at 5.0 ppm, and cherry, tart at 5.0 ppm.
- Based on available field trials residue data, analyzed under the Guidance for Setting Pesticide Tolerances Based on Field Trial Data SOP, the Agency revised the tolerance level from 5.0 to 1.4 ppm for fruit, stone, group 12 (except cherry).
- EPA did not include pistachios in the proposed tolerance on tree nuts, crop group 14 because of pistachios are not currently part of that crop group. Instead EPA established an individual tolerance for pistachios at 0.10 ppm.
- Based on available field trials residue data, analyzed under the Guidance for Setting Pesticide Tolerances Based on Field Trial Data SOP, the Agency revised the tolerance level for almond, hulls from 5.0 to 4.5 ppm.
- Corrected commodity definition of the proposed tolerance on caneberry subgroup 13A to caneberry, subgroup 13-07A to reflect how the crop group is defined in the applicable regulations.

V. Conclusion

Therefore, tolerances are established for residues of the insecticide, fenpropathrin, (alpha-cyano-3-phenoxy-benzyl 2,2,3,3-tetramethylcyclopropanecarboxylate), in or on almond, hulls at 4.5 ppm; cherry, sweet at 5.0 ppm; cherry, tart at 5.0 ppm; fruit, stone, crop group 12 (except cherry) at 1.4 ppm; nut, tree, crop group 14 at 0.10 ppm; avocado at 1.0 ppm; black sapote at 1.0 ppm; canistel at 1.0 ppm; maney sapote at 1.0 ppm; mango at 1.0 ppm; papaya at 1.0 ppm; sapodilla at 1.0 ppm; star apple at 1.0; caneberry, subgroup 13-07A at 12.0 ppm; olive at 5.0 ppm; and pistachio at 0.10 ppm. In addition, the Agency is deleting a time-limited tolerance on currant at 15 ppm which had an expiration date of 12/31/2008.

VI. Statutory and Executive Order Reviews

This final rule establishes tolerances under section 408(d) of FFDCA in response to a petition submitted to the Agency. The Office of Management and Budget (OMB) has exempted these types of actions from review under Executive Order 12866, entitled *Regulatory Planning and Review* (58 FR 51735, October 4, 1993). Because this final rule has been exempted from review under Executive Order 12866, this final rule is not subject to Executive Order 13211, entitled *Actions Concerning Regulations That Significantly Affect Energy Supply, Distribution, or Use* (66 FR 28355, May 22, 2001) or Executive Order 13045, entitled *Protection of Children from Environmental Health Risks and Safety Risks* (62 FR 19885, April 23, 1997). This final rule does not contain any information collections subject to OMB approval under the Paperwork Reduction Act (PRA), 44 U.S.C. 3501 *et seq.*, nor does it require any special considerations under Executive Order 12898, entitled *Federal Actions to Address Environmental Justice in Minority Populations and Low-Income Populations* (59 FR 7629, February 16, 1994).

Since tolerances and exemptions that are established on the basis of a petition under section 408(d) of FFDCA, such as the tolerance in this final rule, do not require the issuance of a proposed rule, the requirements of the Regulatory Flexibility Act (RFA) (5 U.S.C. 601 *et seq.*) do not apply.

This final rule directly regulates growers, food processors, food handlers, and food retailers, not States or tribes, nor does this action alter the relationships or distribution of power and responsibilities established by Congress in the preemption provisions of section 408(n)(4) of FFDCA. As such, the Agency has determined that this action will not have a substantial direct effect on States or tribal governments, on the relationship between the national government and the States or tribal governments, or on the distribution of power and responsibilities among the various levels of government or between the Federal Government and Indian tribes. Thus, the Agency has determined that Executive Order 13132, entitled *Federalism* (64 FR 43255, August 10, 1999) and Executive Order 13175, entitled *Consultation and Coordination with Indian Tribal Governments* (65 FR 67249, November 9, 2000) do not apply to this final rule. In addition, this final rule does not impose any enforceable duty or contain any unfunded mandate as described under Title II of the Unfunded Mandates Reform Act of 1995 (UMRA) (Public Law 104–4).

This action does not involve any technical standards that would require Agency consideration of voluntary consensus standards pursuant to section 12(d) of the National Technology Transfer and Advancement Act of 1995 (NTTAA), Public Law 104–113, section 12(d) (15 U.S.C. 272 note).

VII. Congressional Review Act

The Congressional Review Act, 5 U.S.C. 801 *et seq.*, generally provides that before a rule may take effect, the agency promulgating the rule must submit a rule report to each House of the Congress and to the Comptroller General of the United States. EPA will submit a report containing this rule and other required information to the U.S. Senate, the U.S. House of Representatives, and the Comptroller General of the United States prior to publication of this final rule in the **Federal Register**. This final rule is not a ''major rule'' as defined by 5 U.S.C. 804(2).

List of Subjects in 40 CFR Part 180

Environmental protection, Administrative practice and procedure, Agricultural commodities, Pesticides and pests, Reporting and recordkeeping requirements.

Dated: February 24, 2009.

Lois Rossi,

Director, Registration Division, Office of Pesticide Programs.

■ Therefore, 40 CFR chapter I is amended as follows:

PART 180—[AMENDED]

■ 1. The authority citation for part 180 continues to read as follows:

Authority: 21 U.S.C. 321(q), 346a and 371.

■ 2. Section 180. 466 is amended by alphabetically adding the following commodities to the table in paragraph (a) and by removing the text in paragraph (b) and reserving the heading.

§ 180.466 Fenpropathrin; tolerances for residues.

* * * * *

Commodity	Parts per million
Almond, hulls	4.5
Avocado	1.0
* * *	* *
Caneberry subgroup 13-07A.	12
Canistel	1.0
* * *	* *
Cherry, sweet	5.0
Cherry, tart	5.0
* * *	* *
Fruit, stone, crop group 12, except cherry.	1.4
* * *	* *
Mango	1.0
* * *	* *
Nut, tree, crop group 14.	0.10
Olive	5.0
Papaya	1.0
* * *	* *
Pistachio	0.10
* * *	* *
Sapodilla	1.0
Sapote, black	1.0
Sapote, mamey	1.0
* * *	* *
Star apple	1.0

(b) *Section 18 emergency exemptions. [Reserved]*

* * * * *

[FR Doc. E9–6412 Filed 3–24–09; 8:45 am]

BILLING CODE 6560–50–S

ENVIRONMENTAL PROTECTION AGENCY

40 CFR Part 180

[EPA–HQ–OPP–2007–1202; FRL–8403–7]

Propiconazole; Pesticide Tolerances

AGENCY: Environmental Protection Agency (EPA).

ACTION: Final rule.

SUMMARY: This regulation establishes tolerances for combined residues of propiconazole in or on beet, garden, roots at 0.30 ppm; beet, garden, tops at

5.5 ppm; cilantro, leaves at 13 ppm; parsley, fresh leaves at 13 ppm; parsley, dried leaves at 35 ppm; pineapple at 4.5 ppm; and pineapple, process residue at 7.0 ppm. The Interregional Research Project Number 4 (IR-4) requested these tolerances under the Federal Food, Drug, and Cosmetic Act (FFDCA).

DATES: This regulation is effective March 25, 2009. Objections and requests for hearings must be received on or before May 26, 2009, and must be filed in accordance with the instructions provided in 40 CFR part 178 (see also Unit I.C. of the **SUPPLEMENTARY INFORMATION**).

ADDRESSES: EPA has established a docket for this action under docket identification (ID) number EPA–HQ–OPP–2007–1202. All documents in the docket are listed in the docket index available at *http://www.regulations.gov*. Although listed in the index, some information is not publicly available, e.g., Confidential Business Information (CBI) or other information whose disclosure is restricted by statute. Certain other material, such as copyrighted material, is not placed on the Internet and will be publicly available only in hard copy form. Publicly available docket materials are available in the electronic docket at *http://www.regulations.gov*, or, if only available in hard copy, at the OPP Regulatory Public Docket in Rm. S–4400, One Potomac Yard (South Bldg.), 2777 S. Crystal Dr., Arlington, VA. The Docket Facility is open from 8:30 a.m. to 4 p.m., Monday through Friday, excluding legal holidays. The Docket Facility telephone number is (703) 305–5805.

FOR FURTHER INFORMATION CONTACT: Sidney Jackson, Registration Division (7505P), Office of Pesticide Programs, Environmental Protection Agency, 1200 Pennsylvania Ave., NW., Washington, DC 20460–0001; telephone number: (703) 305–7610; e-mail address: *jackson.sidney@epa.gov.*

SUPPLEMENTARY INFORMATION:

I. General Information

A. Does this Action Apply to Me?

You may be potentially affected by this action if you are an agricultural producer, food manufacturer, or pesticide manufacturer. Potentially affected entities may include, but are not limited to those engaged in the following activities:

- Crop production (NAICS code 111).
- Animal production (NAICS code 112).
- Food manufacturing (NAICS code 311).
- Pesticide manufacturing (NAICS code 32532).

This listing is not intended to be exhaustive, but rather to provide a guide for readers regarding entities likely to be affected by this action. Other types of entities not listed in this unit could also be affected. The North American Industrial Classification System (NAICS) codes have been provided to assist you and others in determining whether this action might apply to certain entities. If you have any questions regarding the applicability of this action to a particular entity, consult the person listed under **FOR FURTHER INFORMATION CONTACT**.

B. How Can I Access Electronic Copies of this Document?

In addition to accessing electronically available documents at *http://www.regulations.gov*, you may access this **Federal Register** document electronically through the EPA Internet under the ''**Federal Register**'' listings at *http://www.epa.gov/fedrgstr*. You may also access a frequently updated electronic version of EPA's tolerance regulations at 40 CFR part 180 through the Government Printing Office's e-CFR cite at *http://www.gpoaccess.gov/ecfr.*.

C. Can I File an Objection or Hearing Request?

Under section 408(g) of FFDCA, 21 U.S.C. 346a, any person may file an objection to any aspect of this regulation and may also request a hearing on those objections. You must file your objection or request a hearing on this regulation in accordance with the instructions provided in 40 CFR part 178. To ensure proper receipt by EPA, you must identify docket ID number EPA–HQ–OPP–2007–1202 in the subject line on the first page of your submission. All requests must be in writing, and must be mailed or delivered to the Hearing Clerk as required by 40 CFR part 178 on or before May 26, 2009.

In addition to filing an objection or hearing request with the Hearing Clerk as described in 40 CFR part 178, please submit a copy of the filing that does not contain any CBI for inclusion in the public docket that is described in **ADDRESSES**. Information not marked confidential pursuant to 40 CFR part 2 may be disclosed publicly by EPA without prior notice. Submit this copy, identified by docket ID number EPA–HQ–OPP–2007–1202, by one of the following methods:

- *Federal eRulemaking Portal*: *http://www.regulations.gov*. Follow the on-line instructions for submitting comments.
- *Mail*: Office of Pesticide Programs (OPP) Regulatory Public Docket (7502P), Environmental Protection Agency, 1200 Pennsylvania Ave., NW., Washington, DC 20460–0001.
- *Delivery*: OPP Regulatory Public Docket (7502P), Environmental Protection Agency, Rm. S–4400, One Potomac Yard (South Bldg.), 2777 S. Crystal Dr., Arlington, VA. Deliveries are only accepted during the Docket Facility's normal hours of operation (8:30 a.m. to 4 p.m., Monday through Friday, excluding legal holidays). Special arrangements should be made for deliveries of boxed information. The Docket Facility telephone number is (703) 305–5805.

II. Petition for Tolerance

In the **Federal Register** of February 6, 2008 (73 FR 6964) (FRL– 8350–9), EPA issued a notice pursuant to section 408(d)(3) of FFDCA, 21 U.S.C. 346a(d)(3), announcing the filing of a pesticide petition (PP 7E7300) by the Interregional Research Project Number 4 (IR-4), 500 College Road East, Suite 201 W, Princeton, NJ 08540. The petition requested that 40 CFR 180.343 be amended by establishing tolerances for combined residues of the fungicide, propiconazole, 1-[[2-(2,4-dichlorophenyl)-4-propyl-1,3-dioxolan-2-yl] methyl]-1H-1,2,4-triazole and its metabolites determined as 2,4,-dichlorobenzoic acid and expressed as parent compound in or on food commodities beet, garden, roots at 0.6 ppm; parsley, leaves at 13 ppm; parsley, dried leaves at 60 ppm; coriander, fresh at 13 ppm; vegetable, leaves of root and tuber, group 2 at 8.0 ppm; pineapple (post harvest) at 0.9 ppm; and turnip, roots at 0.2 ppm. That notice referenced a summary of the petition prepared by Syngenta Crop Protection, the registrant, which is available to the public in the docket, *http://www.regulations.gov*. There were no comments received in response to the notice of filing.

Based upon review of the data supporting the petition, EPA has corrected commodity definition, revised, deleted and/or modified tolerances petitioned for as follows:

- Revised the tolerance level (adjusted for 1x application rate) for beet, garden, roots from 0.6 to 0.30 ppm and established a tolerance for beet, garden, tops at 5.5 ppm,
- Revised the tolerance level for parsley, dried from 60 to 35 ppm,
- Revised the tolerance level for pineapple from 0.9 to 4.5 ppm, replacing existing pineapple tolerance of 0.1 ppm, and establish a tolerance for pineapple, process residue at 7.0 ppm,
- Corrected the commodity name from ''coriander, fresh'' to ''cilantro, leaves''.

At this time, the Agency is not making a decision on the proposed tolerance for vegetable, leaves of root and tuber, group 2 at 8.0 ppm, and the proposed tolerance for turnip, roots at 0.2 ppm. That aspect of the petition remains pending. The reasons for these changes are explained in Unit IV.D.

III. Aggregate Risk Assessment and Determination of Safety

Section 408(b)(2)(A)(i) of FFDCA allows EPA to establish a tolerance (the legal limit for a pesticide chemical residue in or on a food) only if EPA determines that the tolerance is ''safe.'' Section 408(b)(2)(A)(ii) of FFDCA defines ''safe'' to mean that ''there is a reasonable certainty that no harm will result from aggregate exposure to the pesticide chemical residue, including all anticipated dietary exposures and all other exposures for which there is reliable information.'' This includes exposure through drinking water and in residential settings, but does not include occupational exposure. Section 408(b)(2)(C) of FFDCA requires EPA to give special consideration to exposure of infants and children to the pesticide chemical residue in establishing a tolerance and to ''ensure that there is a reasonable certainty that no harm will result to infants and children from aggregate exposure to the pesticide chemical residue....''

Consistent with section 408(b)(2)(D) of FFDCA, and the factors specified in section 408(b)(2)(D) of FFDCA, EPA has reviewed the available scientific data and other relevant information in support of this action. EPA has sufficient data to assess the hazards of and to make a determination on aggregate exposure for the petitioned-for tolerances for combined residues of propiconazole, 1-[[2-(2,4-dichlorophenyl)-4-propyl-1,3-dioxolan-2-yl] methyl]-1H-1,2,4-triazole and its metabolites determined as 2,4,-dichlorobenzoic acid and expressed as parent compound in or on food commodities: beet, garden, roots at 0.30 ppm; beet, garden, tops at 5.5 ppm, cilantro, leaves at 13 ppm; parsley, fresh at 13 ppm; parsley, dried at 35 ppm; pineapple at 4.5 ppm; and pineapple, process residue at 7.0 ppm. EPA's assessment of exposures and risks associated with establishing tolerances follows.

A. Toxicological Profile

Propiconazole has low to moderate toxicity in experimental animals by the oral, dermal and inhalation routes. It is moderately irritating to the eyes, and minimally irritating to the skin. It is a dermal sensitizer. Propiconazole is readily absorbed by the rat skin with 40% absorption within 10 hours of dermal application.

The primary target organ for propiconazole toxicity in animals is the liver. Increased liver weights were seen in mice after subchronic or chronic oral exposures to propiconazole at doses >50 mg/kg/day. Liver lesions such as vacuolation of hepatocytes, ballooned liver cells, foci of enlarged hepatocytes, hypertrophy and necrosis are characteristic of propiconazole toxicity in rats and mice. Mice appear to be more susceptible to its toxicity than rats. Decreased body weight gain in experimental animals was seen in subchronic, chronic, developmental and reproductive studies. Dogs appeared to be more sensitive to the localized toxicity of propiconazole as manifested by stomach irritation at 6 mg/kg/day and above.

In rabbits, developmental toxicity occurred at a higher dose than the maternal toxic dose, while in rats, developmental toxicity occurred at lower doses than maternal toxic doses. Increased incidences of rudimentary ribs occurred in rat and rabbit fetuses. Increased cleft palate malformations were noted in two studies in rats. In one published study in rats developmental effects (incomplete ossification of the skull, caudal vertebrae and digits, extra rib (14th rib) and missing sternebrae, malformations of the lung and kidneys) were reported at doses that were not maternally toxic.

In the 2–generation reproduction study in rats, offspring toxicity occurred at a higher dose than the parental toxic dose suggesting lower susceptibility of the offspring to the toxic doses of propiconazole in this study.

Propiconazole was negative for mutagenicity in the *in vitro* BALB/ C 3T3 cell transformation assay, bacterial reverse mutation assay, Chinese hamster bone marrow chromosomal aberration assay, unscheduled DNA synthesis studies in human fibroblasts and primary rat hepatocytes, mitotic gene conversion assay and the dominant lethal assay in mice. Hepatocellular proliferation studies in mice suggest that propiconazole induces cell proliferation followed by treatment-related hypertrophy in a manner similar to the known hypertrophic agent phenobarbital.

Propiconazole was carcinogenic to CD-1 male mice. Propiconazole was not carcinogenic to rats nor to female mice. The Agency classified propiconazole as Group C - possible human carcinogen and recommended that for the purpose of risk characterization the reference dose (RfD) approach be used for quantification of human risk. Propiconazole is not genotoxic and this fact, together with special mechanistic studies indicate that propiconazole is a threshold carcinogen. Propiconazole produced liver tumors in male mice only at a high dose that was toxic to the liver. At doses below the RfD liver toxicity is not expected, and therefore tumors are also not expected.

EPA has evaluated the available toxicity data and considered their validity, completeness, and reliability as well as the relationship of the results of the studies to human risk. EPA has also considered available information concerning the variability of the sensitivities of major identifiable subgroups of consumers, including infants and children. Specific information on the studies received and the nature of the adverse effects caused by propiconazole as well as the no-observed-adverse-effect-level (NOAEL) and the lowest-observed-adverse-effect-level (LOAEL) from the toxicity studies can be found at *http://www.regulations.gov* in document: ''Propiconazole FQPA Human Health Risk Assessment for the Section 3 Registrations on Garden Beets, Turnips, Parsley, Cilantro and Pineapple.'' Petition No. 7E7300, dated September 30, 2008, page 21 in Docket ID number: EPA–HQ–OPP–2007–1202–0003.

B. Toxicological Endpoints

For hazards that have a threshold below which there is no appreciable risk, a toxicological point of departure (POD) is identified as the basis for derivation of reference values for risk assessment. The POD may be defined as the highest dose at which the NOAEL in the toxicology study identified as appropriate for use in risk assessment. However, if a NOAEL cannot be determined, the LOAEL or a Benchmark Dose (BMD) approach is sometimes used for risk assessment. Uncertainty/ safety factors (UFs) are used in conjunction with the POD to take into account uncertainties inherent in the extrapolation from laboratory animal data to humans and in the variations in sensitivity among members of the human population as well as other unknowns. Safety is assessed for acute and chronic dietary risks by comparing aggregate food and water exposure to the pesticide to the acute population adjusted dose (aPAD) and chronic population adjusted dose (cPAD). The aPAD and cPAD are calculated by dividing the POD by all applicable UFs. Aggregate short-, intermediate-, and chronic-term risks are evaluated by comparing food, water, and residential exposure to the POD to ensure that the

margin of exposure (MOE) called for by the product of all applicable UFs is not exceeded. This latter value is referred to as the Level of Concern (LOC).

For non-threshold risks, the Agency assumes that any amount of exposure will lead to some degree of risk. Thus, the Agency estimates risk in terms of the probability of an occurrence of the adverse effect greater than that expected in a lifetime. For more information on the general principles EPA uses in risk characterization and a complete description of the risk assessment process, see *http://www.epa.gov/pesticides/factsheets/riskassess.htm*.

A summary of the toxicological endpoints for propiconazole used for human risk assessment can be found at *http://www.regulations.gov* in document: ''Propiconazole FQPA Human Health Risk Assessment for the Section 3 Registrations on Garden Beets, Turnips, Parsley, Cilantro and Pineapple.'' Petition No. 7E7300, dated September 30, 2008, page 21 in docket ID number EPA–HQ–OPP–2007–1202–0003.

C. Exposure Assessment

1. *Dietary exposure from food and feed uses*. In evaluating dietary exposure to propiconazole, EPA considered exposure under the petitioned-for tolerances as well as all existing propiconazole tolerances in (40 CFR 180.434). EPA assessed dietary exposures from propiconazole in food as follows:

i. *Acute exposure*. Quantitative acute dietary exposure and risk assessments are performed for a food-use pesticide, if a toxicological study has indicated the possibility of an effect of concern occurring as a result of a 1–day or single exposure.

In estimating acute dietary exposure, EPA used food consumption information from the United States Department of Agriculture (USDA) 1994–1996 and 1998 Nationwide Continuing Surveys of Food Intake by Individuals (CSFII). As to residue levels in food, EPA conducted acute dietary analysis for propiconazole using tolerance level residues and 100 percent crop treated (PCT) for all existing and proposed uses.

ii. *Chronic exposure*. In conducting the chronic dietary exposure assessment EPA used the food consumption data from the USDA 1994–1996 and 1998 CSFII. As to residue levels in food, EPA conducted chronic dietary analysis for propiconazole using tolerance level residues and 100 PCT for all existing and proposed uses.

iii. *Cancer*. As explained in this Unit, the chronic RfD is protective of propiconazole's cancer effects. For the purpose of assessing cancer risk under the chronic RfD, EPA used the same exposure estimates as discussed in Unit III.C.1.ii., chronic exposure.

iv. *Anticipated residue and PCT information*. EPA did not use anticipated residue and/or PCT information in the dietary assessment for propiconazole. Tolerance level residues and/or 100 PCT were assumed for all food commodities.

2. *Dietary exposure from drinking water*. The Agency used screening level water exposure models in the dietary exposure analysis and risk assessment for propiconazole in drinking water. These simulation models take into account data on the physical, chemical, and fate/transport characteristics of propiconazole. Further information regarding EPA drinking water models used in pesticide exposure assessment can be found at *http://www.epa.gov/oppefed1/models/water/index.htm*.

Based on the Pesticide Root Zone Model/Exposure Analysis Modeling System (PRZM/EXAMS) and Screening concentration in Ground Water (SCI-GROW) models, the estimated environmental concentrations (EECs) of propiconazole for acute exposures are estimated to be 55.8 parts per billion (ppb) for surface water and 0.64 ppb for ground water. The EECs for chronic exposures are estimated to be 21.6 ppb for surface water and 0.64 ppb for ground water.

Modeled estimates of drinking water concentrations were directly entered into the dietary exposure model (DEEM-FCID™). For acute dietary risk assessment, the peak water concentration value of 55.8 ppb was used to access the contribution to drinking water. For chronic dietary risk assessment, the annual average concentration of 21.6 ppb was used to access the contribution to drinking water.

3. *From non-dietary exposure*. The term ''residential exposure'' is used in this document to refer to non-occupational, non-dietary exposure (e.g., for lawn and garden pest control, indoor pest control, termiticides, and flea and tick control on pets).

Propiconazole is currently registered for the following uses that could result in residential exposures: Turf, ornamentals, and antimicrobial uses in wood preservation treatments and paint. No new residential uses are associated with the petitioned-for tolerances. However, adults, adolesescents and toddlers may be exposed to propiconazole from currently registered uses. EPA assessed residential exposure using the following assumptions: Homeowners can be exposed to propiconazole through dermal and inhalation routes while applying home use products. All risk calculations were conducted using the maximum turf application rate (1.8 lb ai/acre). The anticipated use patterns and current labeling indicate three major residential exposure scenarios based on the types of equipment and techniques that can potentially be used to make propiconazole applications. The quantitative exposure/risk assessment developed for residential handlers is based on these scenarios:

- Mixer/Loader/applying liquids and wettable powder in water soluble packets via low pressure handwand.
- Mixer/Loader/applying liquids and wettable powder in water soluble packets via hose-end sprayer.
- Applying treated paint using airless sprayer and hose-end spray.

Residential handler exposure scenarios are considered to be short-term only due to the infrequent uses associated with homeowner products.

The existing residential use patterns result in post application dermal exposures to adults, and dermal and oral exposures to infants and children. These exposure scenarios are considered short term only, due to the fact that:

i. Post-application exposures were calculated using propiconazole as the parent compound;

ii. Compound specific turf transferable residue (TTR) data indicate that at the Indiana, California, and Pennsylvania test sites, average total propiconazole residues declined to below the minimum quantifiable limit (MQL) by 14, 10 and 8 days after treatment, respectively. These dissipation rates, combined with label specific use rates and frequency of use specifications, reinforce the hand to mouth short-term exposure scenario; and

iii. For short term exposure to children 1–2 years old, the driving factors for this risk assessment are hand to mouth, object to mouth, and dermal exposure. Soil ingestion is insignificant (margin of exposure (MOE) >300,000) compared to these factors, indicating that the post application scenario should be short term only. Although both residential and antimicrobial uses result in incidental oral and dermal exposure to children, the highest incidental oral and dermal exposure scenarios are from residential use on turf, which were used in the short term aggregate risk assessment.

In addition to using the EPA's Standard Operational Procedure (SOP) for residential assessment, the study

specific turf transferable residue (TTR) was used to estimate exposures. The EPA combined exposures resulting from separate post-application exposure scenarios when it is likely they can occur simultaneously based on the use-pattern and the behavior associated with the exposed population. The assumptions used for each of the scenarios separately are considered to account for potential high levels of exposure (i.e., time spent outdoors, dislodgeable residues) therefore, combining all these activities together is considered a very high end estimate of exposure.

Propiconazole is classified as a non-volatile chemical; therefore a residential inhalation post-application assessment was not assessed.

The only residential use scenario that will result in potential intermediate term exposure to propiconazole is post application exposure to children from wood treatment (antimicrobial use) from incidental oral and dermal contact activities. Propiconazole is used on many different types of wood including playground structures. EPA assessed the risk to children playing on propiconazole-treated structures using screening level assessment.

4. *Cumulative effects from substances with a common mechanism of toxicity*. Section 408(b)(2)(D)(v) of FFDCA requires that, when considering whether to establish, modify, or revoke a tolerance, the Agency consider ''available information'' concerning the cumulative effects of a particular pesticide's residues and ''other substances that have a common mechanism of toxicity.''

Propiconazole is a member of the triazole-containing class of pesticides. Although conazoles act similarly in plants (fungi) by inhibiting ergosterol biosynthesis, there is not necessarily a relationship between their pesticidal activity and their mechanism of toxicity in mammals. Structural similarities do not constitute a common mechanism of toxicity. Evidence is needed to establish that the chemicals operate by the same, or essentially the same, sequence of major biochemical events. In conazoles, however, a variable pattern of toxicological responses is found. Some include hepatotoxic and hepatocarcinogenic in mice. Some induce thyroid tumors in rats. Some induce developmental, reproductive, and neurological effects in rodents. Furthermore, the conazoles produce a diverse range of biochemical events including altered cholesterol levels, stress responses, and altered DNA methylation. It is not clearly understood whether these biochemical events are directly connected to their toxicological outcomes. Thus, there is currently no evidence to indicate that conazoles share common mechanisms of toxicity and EPA is not following a cumulative risk approach based on a common mechanism of toxicity for the conazoles. For information regarding EPA's procedures for cumulating effects from substances found to have a common mechanism of toxicity, see EPA's website at *http://www.epa.gov/pesticides/cumulative*.

Propiconazole is a triazole-derived pesticide. This class of compounds can form the common metabolite 1,2,4-triazole and two triazole conjugates (triazolylalanine and triazolylacetic acid). To support existing tolerances and to establish new tolerances for triazole-derivative pesticides, including propiconazole, EPA conducted a human health risk assessment for exposure to 1,2,4-triazole, triazolylalanine, and triazolylacetic acid resulting from the use of all current and pending uses of any triazole-derived fungicide. The risk assessment is a highly conservative, screening-level evaluation in terms of hazards associated with common metabolites (e.g., use of a maximum combination of uncertainty factors) and potential dietary and non-dietary exposures (i.e., high end estimates of both dietary and non-dietary exposures). In addition, the Agency retained the additional 10X FQPA safety factor for the protection of infants and children. The assessment includes evaluations of risks for various subgroups, including those comprised of infants and children. The Agency's complete risk assessment is found in the propiconazole reregistration docket at *http://www.regulations.gov*, Docket Identification (ID) Number EPA–HQ–OPP–2005–0497. Also, see document: ''Common Triazole Metabolites: Updated Aggregate Human Health Risk Assessment to Address Tolerance Petitions for Metconazole, Propiconazole, Prothioconazole, and Tetraconazole,'' dated November 8, 2008, Docket: EPA–HQ–OPP–2007–1202–0006.

D. Safety Factor for Infants and Children

1. *In general*. Section 408(b)(2)(c) of FFDCA provides that EPA shall apply an additional tenfold (10X) margin of safety for infants and children in the case of threshold effects to account for prenatal and postnatal toxicity and the completeness of the database on toxicity and exposure unless EPA determines based on reliable data that a different margin of safety will be safe for infants and children. This additional margin of safety is commonly referred to as the FQPA safety factor (SF). In applying this provision, EPA either retains the default value of 10X, or uses a different additional safety factor when reliable data available to EPA support the choice of a different factor.

2. *Prenatal and postnatal sensitivity*. The Agency concluded that there is low concern for pre- and/or postnatal toxicity resulting from exposure to propiconazole. In the developmental toxicity study in rabbits, the EPA determined that neither quantitative nor qualitative evidence of increased susceptibility of fetuses to *in utero* exposure to propiconazole was observed in this study. In the 2–generation reproduction study in rats, EPA determined that neither quantitative nor qualitative evidence of increased susceptibility of neonates (as compared to adults) to pre- and/or postnatal exposure to propiconazole was observed in this study. In the developmental rat study, however, quantitative susceptibility was evidenced as increased incidence of rudimentary ribs, unossified sternebrae, as well as increased incidence of shortened and absent renal papillae and increased cleft palate at 90 mg/kg/day, a dose lower than that evoking maternal toxicity (severe clinical toxicity at 300 mg/kg/day). nsidering the overall toxicity profile and the doses and endpoints selected for risk assessment for propiconazole, the EPA characterized the degree of concern for the effects observed in this study as low, noting that there is a clear no observed adverse effect level (NOAEL) and well-characterized dose response for the developmental effects observed. No residual uncertainties were identified. The NOAEL for developmental effects in this study (30 mg/kg/day) is used as the basis for the acute reference dose (aRfD) for the female 13–50 population subgroup as well as for short-term incidental oral, dermal and inhalation endpoints. For all other toxicity endpoints established for propiconazole, a NOAEL lower than this developmental NOAEL is used.

3. *Conclusion*. EPA has determined that reliable data show the safety of infants and children would be adequately protected if the FQPA SF were reduced to 1X. That decision is based on the following findings:

i. The toxicity database for propiconazole is complete except for immunotoxicity testing. EPA began requiring functional immunotoxicity testing of all food and non-food use pesticides on December 26, 2007. Since this requirement went into effect after the tolerance petition was submitted,

these studies are not yet available for propiconazole. In the absence of specific immunotoxicity studies, EPA has evaluated the available propiconazole toxicity data to determine whether an additional database uncertainty factor is needed to account for potential immunotoxicity. There was no evidence of adverse effects on the organs of the immune system at the LOAEL in any study propiconazole. In addition, propiconazole does not belong to a class of chemicals (e.g., the organotins, heavy metals, or halogenated aromatic hydrocarbons) that would be expected to be immunotoxic. Based on the considerations in this Unit, EPA does not believe that conducting a special series 870.7800 immunotoxicity study will result in a point of departure less than the NOAEL of 10.0 mg/kg/day used in calculation the cPAD for propiconazole, and therefore, an additional database uncertainty factor is not needed to account for potential immunotoxicity.

ii. EPA also began requiring acute and subchronic neutotoxicity testing of all food and non-food use pesticides on December 26, 2007. An acute neurotoxicity study has been submitted to the Agency, but since the requirement for neurotoxicity testing went into effect after the tolerance petition was submitted, the subchronic neurotoxicity study is not yet available for propiconazole. In the absence of the subchronic neurotoxicity study, EPA has evaluated the available propiconazole toxicity data to determine whether an additional database uncertainty factor is needed to account for potential neurotoxicity after repeated exposures. With the exception of the developmental studies in the rat, there were no indications in any of the repeated dose studies that propiconazole is neurotoxic. In the developmental studies in the rat, there were some clinical signs of neurotoxicity at 300 mg/kg/day but not at lower doses. Based on the considerations in this Unit, EPA does not believe that conducting a series 870.6200b subchronic neurotoxicity study will result in a point of departure less than the NOAEL of 10 mg/kg/day used in calculation the cPAD for propiconazole, and therefore, an additional database uncertainty factor is not needed to account for potential neurotoxicity from repeated exposures. There is no indication in the developmental and reproduction studies, nor in the acute neurotoxicity study that a developmental neurotoxicity study should be required.

iii. There is no evidence that propiconazole results in increased susceptibility in *in utero* in rabbits in the rabbit prenatal developmental study or in young rats in the 2–generation reproduction study. Although quanititative susceptibility of the young was observed in the rat developmental study, there is low concern for the prenatal toxicity seen in this study for the reasons described in this Unit.

iv. There are no residual uncertainties identified in the exposure databases. Dietary food exposure assessments were performed based on 100 PCT and tolerance-level residues. The exposure databases (dietary food, drinking water, and residential) are complete and the risk assessment for each potential exposure scenario includes all metabolites and/or degradates of concern and does not underestimate the potential risk for infants and children. EPA made conservative (protective) assumptions in the ground and surface water modeling used to assess exposure to propiconazole in drinking water. EPA used similarly conservative assumptions to assess postapplication exposure of children as well as incidental oral exposure of toddlers. These assessments will not underestimate the exposure and risks posed by propiconazole.

E. Aggregate Risks and Determination of Safety

EPA determines whether acute and chronic pesticide exposures are safe by comparing aggregate exposure estimates to the aPAD and cPAD. The aPAD and cPAD represent the highest safe exposures, taking into account all appropriate SFs. EPA calculates the aPAD and cPAD by dividing the POD by all applicable UFs. For linear cancer risks, EPA calculates the probability of additional cancer cases given the estimated aggregate exposure. Short-, intermediate-, and chronic-term risks are evaluated by comparing the estimated aggregate food, water, and residential exposure to the POD to ensure that the MOE called for by the product of all applicable UFs is not exceeded.

Acute and chronic aggregate dietary (food and drinking water) exposure and risk assessments were conducted for parent propiconazole using the Dietary Exposure Evaluation Model DEEM-FCID™, Version 2.03 which use food consumption data from the U.S. Department of Agriculture's Continuing Surveys of Food Intakes by Individuals (CSFII) from 1994–1996 and 1998. This dietary assessment is for the parent propiconazole only. The common metabolites- triazole, triazolylalanine (TA), and triazolylacetic acid (TAA) are also residues of concern. Since these are common metabolites from several triazole pesticides, the risk assessment for triazoles was assessed separately. The updated risk assessment for triazole metabolites indicated that adding the new uses of propiconazole will not result in unacceptable risk to the triazole metabolites (see ''Common Triazole Metabolites: Updated Aggregate Human Health Risk Assessment to Address Tolerance Petitions for Metconazole, Propiconazole, Prothioconazole, and Tetraconazole,'' dated November 8, 2008, ID Docket Number: EPA–HQ–OPP–2007–1202–0006.

1. *Acute risk.* An acute aggregate risk assessment takes into account exposure estimates from acute dietary consumption of food and drinking water. Using the exposure assumptions discussed in this unit for acute exposure, the acute dietary exposure from food and water to propiconazole will occupy 16% of the aPAD for all infants <1 year old the population group receiving the greatest exposure.

2. *Chronic risk.* Using the exposure assumptions described in this unit for chronic exposure, EPA has concluded that chronic exposure to propiconazole from food and water will utilize 17% of the cPAD for children 1–2 years old the population group receiving the greatest exposure. Based on the explanation in Unit III.C.3., regarding residential use patterns, chronic residential exposure to residues of propiconazole is not expected.

3. *Short-term risk.* Short-term aggregate exposure takes into account short-term residential exposure plus chronic exposure to food and water (considered to be a background exposure level).

Propiconazole is currently registered for uses that could result in short-term residential exposure and the Agency has determined that it is appropriate to aggregate chronic exposure through food and water with short-term residential exposures to propiconazole.

An aggregated risk to toddlers from exposures to residential turf use including:

i. Hand-to-mouth activity,

ii. Object to mouth activity,

iii. Soil ingestion, and

iv. Turf-general high-contact activities

was evaluated and resulted in an aggregate MOE of 170 which is below the Agency's level of concern (MOE of 100 or less).

Using the exposure assumptions described in this unit for short-term exposures, EPA has concluded the combined short-term food, water, and residential and antimicrobial exposures aggregated result in aggregate combined MOE of 160 resulting from all exposure

scenarios (oral and dermal). The highest incidental oral and dermal exposure scenarios are from residential use on turf, which were used in the short-term aggregate risk assessment. The short-term aggregate risk does not exceed the Agency's level of concern.

4. *Intermediate-term risk.* Intermediate-term aggregate exposure takes into account intermediate-term residential exposure plus chronic exposure to food and water (considered to be a background exposure level).

Propiconazole is currently registered for uses that could result in intermediate-term residential exposure and the Agency has determined that it is appropriate to aggregate chronic exposure to propiconazole through food and water with intermediate-term exposures for propiconazole.

Using the exposure assumptions described in this unit for intermediate-term exposures, EPA has concluded that the combined intermediate-term food, water, and residential exposures aggregated result in aggregate MOEs of 120 (exposure to Children 1–2 years old), which is below the Agency's level of concern (MOE of 100 or less). The only residential use scenario that will result in potential intermediate term exposure to propiconazole is post application exposure to children from wood treatment (antimicrobial use).

5. *Aggregate cancer risk for U.S. population.* The Agency considers the chronic aggregate risk assessment, making use of the cPAD, to be protective of the aggregate cancer risk. See Unit III.A.

6. *Determination of safety.* Based on these risk assessments, EPA concludes that there is a reasonable certainty that no harm will result to the general population or to infants and children from aggregate exposure to propiconazole residues.

IV. Other Considerations

A. Analytical Enforcement Methodology

Adequate enforcement methodology (gas chromatography (GC) method using flame ionization detection (Method AG-354) is available to enforce the tolerance expression. The method may be requested from: Chief, Analytical Chemistry Branch, Environmental Science Center, 701 Mapes Rd., Ft. Meade, MD 20755–5350; telephone number: (410) 305–2905; e-mail address: *residuemethods@epa.gov*.

B. International Residue Limits

The Codex Alimentarius Commission has established several maximum residue limits (MRLs) for propiconazole in/on various raw agricultural commodities. In addition, both Canada and Mexico have established MRLs for propiconazole in/on various commodities. No Codex, Mexican, or Canadian MRLs have been established for any crop commodity associated with this petition.

C. Revisions to Petitioned-For Tolerances

Based upon review of available data supporting the petition, EPA revised the tolerance levels, added or deleted tolerances, or otherwise modified the petition as proposed in the notice of filing, as follows:

- Revised the tolerance level for beet, garden, roots from 0.6 to 0.30 ppm and established a tolerance for beet, garden, tops at 5.5 ppm, Adequate field trial residue data were submitted for garden beets at 1.5 times the proposed maximum treatment rate. Adjusting to the 1x rate, the Agency is setting a 0.30 ppm tolerance on garden beet roots and a 5.5 ppm tolerance on garden beet tops.
- Corrected the commodity name from ''coriander, fresh'' to ''cilantro, leaves'' based on the Agency's current crop naming guidelines,
- Revised the tolerance level for parsley, dried from 60 to 35 ppm. Available processing data show that propiconazole residues concentrate in parsley, dried (processing factor of 5.5). The highest average field trial (HAFT) value from field studies is 6.3 ppm. Multiplying the processing factor by the HAFT value indicates that a tolerance level of 35 is needed.
- Revised the proposed tolerance level for pineapple from 0.9 ppm to 4.5 ppm, replacing the existing pineapple tolerance of 0.1 ppm. The appropriate tolerance level for propiconzole in/on pineapple was calculated from HAFT values in a dataset of eighteen (18) samples from pineapple postharvest field trials using application rates within 25% of the maximum label use rate. These data indicate a propiconazole residue tolerance level for pineapple at 4.5 ppm is appropriate, and
- Established a tolerance for pineapple, process residue at 7.0 ppm. Propiconazole residues in pineapple process residue concentrate with a processing factor of 1.7. Multiplying the processing factor for pineapple by the HAFT value (3.6 ppm) indicates that a tolerance level of 7.0 ppm is needed.

V. Conclusion

Therefore, tolerances are established for combined residues of propiconazole, 1-[[2-(2,4-dichlorophenyl)-4-propyl-1,3-dioxolan-2-yl] methyl]-1H-1,2,4-triazole and its metabolites determined as 2,4,-dichlorobenzoic acid and expressed as parent compound in or on food commodities: Beet, garden, roots at 0.30 ppm; beet, garden, tops at 5.5 ppm; cilantro, leaves at 4.5 ppm; parsley, fresh at 13 ppm; parsley, dried at 35 ppm; pineapple at 4.5 ppm; and pineapple, process residue at 7.0 ppm.

VI. Statutory and Executive Order Reviews

This final rule establishes tolerances under section 408(d) of FFDCA in response to a petition submitted to the Agency. The Office of Management and Budget (OMB) has exempted these types of actions from review under Executive Order 12866, entitled *Regulatory Planning and Review* (58 FR 51735, October 4, 1993). Because this final rule has been exempted from review under Executive Order 12866, this final rule is not subject to Executive Order 13211, entitled *Actions Concerning Regulations That Significantly Affect Energy Supply, Distribution, or Use* (66 FR 28355, May 22, 2001) or Executive Order 13045, entitled *Protection of Children from Environmental Health Risks and Safety Risks* (62 FR 19885, April 23, 1997). This final rule does not contain any information collections subject to OMB approval under the Paperwork Reduction Act (PRA), 44 U.S.C. 3501 *et seq.*, nor does it require any special considerations under Executive Order 12898, entitled *Federal Actions to Address Environmental Justice in Minority Populations and Low-Income Populations* (59 FR 7629, February 16, 1994).

Since tolerances and exemptions that are established on the basis of a petition under section 408(d) of FFDCA, such as the tolerance in this final rule, do not require the issuance of a proposed rule, the requirements of the Regulatory Flexibility Act (RFA) (5 U.S.C. 601 *et seq.*) do not apply.

This final rule directly regulates growers, food processors, food handlers, and food retailers, not States or tribes, nor does this action alter the relationships or distribution of power and responsibilities established by Congress in the preemption provisions of section 408(n)(4) of FFDCA. As such, the Agency has determined that this action will not have a substantial direct effect on States or tribal governments, on the relationship between the national government and the States or tribal governments, or on the distribution of power and responsibilities among the various levels of government or between the Federal Government and Indian tribes. Thus, the Agency has determined that Executive Order 13132, entitled *Federalism* (64 FR 43255, August 10,

1999) and Executive Order 13175, entitled *Consultation and Coordination with Indian Tribal Governments* (65 FR 67249, November 9, 2000) do not apply to this final rule. In addition, this final rule does not impose any enforceable duty or contain any unfunded mandate as described under Title II of the Unfunded Mandates Reform Act of 1995 (UMRA) (Public Law 104–4).

This action does not involve any technical standards that would require Agency consideration of voluntary consensus standards pursuant to section 12(d) of the National Technology Transfer and Advancement Act of 1995 (NTTAA), Public Law 104–113, section 12(d) (15 U.S.C. 272 note).

VII. Congressional Review Act

The Congressional Review Act, 5 U.S.C. 801 *et seq.*, generally provides that before a rule may take effect, the agency promulgating the rule must submit a rule report to each House of the Congress and to the Comptroller General of the United States. EPA will submit a report containing this rule and other required information to the U.S. Senate, the U.S. House of Representatives, and the Comptroller General of the United States prior to publication of this final rule in the **Federal Register**. This final rule is not a ''major rule'' as defined by 5 U.S.C. 804(2).

List of Subjects in 40 CFR Part 180

Environmental protection, Administrative practice and procedure, Agricultural commodities, Pesticides and pests, Reporting and recordkeeping requirements.

Dated: February 27, 2009.

Daniel J. Rosenblatt,

Acting Director, Registration Division, Office of Pesticide Programs.

■ Therefore, 40 CFR chapter I is amended as follows:

PART 180—[AMENDED]

■ 1. The authority citation for part 180 continues to read as follows:

Authority: 21 U.S.C. 321(q), 346a and 371.

■ 2. Section 180.434 is amended by revising the tolerance for pineapple and by alphabetically adding the following commodities to the table in paragraph (a) to read as follows:

§180.434 Propiconazole; tolerance for residues.

(a) * * *

Commodity	Parts per million
* * * *	*
Beet, garden, roots	0.30
Beet, garden, tops	5.5
* * * *	*
Cilantro, leaves	13
* * * *	*
Parsley, fresh leaves	13
Parsley, dried leaves	35
* * * *	*
Pineapple	4.5
Pineapple, process residue	7.0

* * * * *

[FR Doc. E9–6273 Filed 3–24–09; 8:45 am]

BILLING CODE 6560–50–S

ENVIRONMENTAL PROTECTION AGENCY

40 CFR Part 180

[EPA–HQ–OPP–2007–0081; FRL–8404–4]

Thymol; Exemption from the Requirement of a Tolerance

AGENCY: Environmental Protection Agency (EPA).

ACTION: Final rule.

SUMMARY: This regulation establishes an exemption from the requirement of a tolerance for residues of thymol (as present in thyme oil) in or on food commodities when applied/used in/on public eating places, dairy processing equipment, and/or food processing equipment and utensils. Sensible Life Products submitted a petition to EPA under the Federal Food, Drug, and Cosmetic Act (FFDCA), as amended by the Food Quality Protection Act of 1996 (FQPA), requesting an exemption from the requirement of a tolerance. This regulation eliminates the need to establish a maximum permissible level for residues of thymol.

DATES: This regulation is effective March 25, 2009. Objections and requests for hearings must be received on or before May 26, 2009, and must be filed in accordance with the instructions provided in 40 CFR part 178 (see also Unit I.C. of the **SUPPLEMENTARY INFORMATION**).

ADDRESSES: EPA has established a docket for this action under docket identification (ID) number EPA–HQ–OPP–2007–0081. To access the electronic docket, go to *http://www.regulations.gov*, select ''Advanced Search,'' then ''Docket Search.'' Insert the docket ID number where indicated and select the ''Submit'' button. Follow the instructions on the regulations.gov website to view the docket index or access available documents. All documents in the docket are listed in the docket index available in regulations.gov. Although listed in the index, some information is not publicly available, e.g., Confidential Business Information (CBI) or other information whose disclosure is restricted by statute. Certain other material, such as copyrighted material, is not placed on the Internet and will be publicly available only in hard copy form. Publicly available docket materials are available in the electronic docket at *http://www.regulations.gov*, or, if only available in hard copy, at the OPP Regulatory Public Docket in Rm. S–4400, One Potomac Yard (South Bldg.), 2777 S. Crystal Dr., Arlington, VA. The Docket Facility is open from 8:30 a.m. to 4 p.m., Monday through Friday, excluding legal holidays. The Docket Facility telephone number is (703) 305–5805.

FOR FURTHER INFORMATION CONTACT: Mark Hartman, Antimicrobials Division (7510P), Environmental Protection Agency, 1200 Pennsylvania Ave., NW., Washington, DC 20460–0001; telephone number: (703) 308–0734; *hartman.mark@epa.gov*.

SUPPLEMENTARY INFORMATION:

I. General Information

A. Does this Action Apply to Me?

You may be potentially affected by this action if you are an agricultural producer, food manufacturer, or pesticide manufacturer. Potentially affected entities may include, but are not limited to:

- Crop production (NAICS code 111).
- Animal production (NAICS code 112).
- Food manufacturing (NAICS code 311).
- Pesticide manufacturing (NAICS code 32532).

This listing is not intended to be exhaustive, but rather provides a guide for readers regarding entities likely to be affected by this action. Other types of entities not listed in this unit could also be affected. The North American Industrial Classification System (NAICS) codes have been provided to assist you and others in determining whether this action might apply to certain entities. To determine whether you or your business may be affected by this action, you should carefully examine the applicability provisions. If you have any questions regarding the applicability of this action to a particular entity, consult the person

listed under **FOR FURTHER INFORMATION CONTACT**.

B. How Can I Access Electronic Copies of this Document?

In addition to accessing an electronic copy of this **Federal Register** document through the electronic docket at *http://www.regulations.gov*, you may access this ''**Federal Register**'' document electronically through the EPA Internet under the ''**Federal Register**'' listings at *http://www.epa.gov/fedrgstr*. You may also access a frequently updated electronic version of 40 CFR part 180 through the Government Printing Office's pilot e-CFR site at *http://www.gpoaccess.gov/ecfr*.

C. Can I File an Objection or Hearing Request?

Under section 408(g) of FFDCA, as amended by FQPA, any person may file an objection to any aspect of this regulation and may also request a hearing on those objections. The EPA procedural regulations which govern the submission of objections and requests for hearings appear in 40 CFR part 178. You must file your objection or request a hearing on this regulation in accordance with the instructions provided in 40 CFR part 178. To ensure proper receipt by EPA, you must identify docket ID number EPA–HQ–OPP–2007–0081 in the subject line on the first page of your submission. All requests must be in writing, and must be mailed or delivered to the Hearing Clerk on or before May 26, 2009.

In addition to filing an objection or hearing request with the Hearing Clerk as described in 40 CFR part 178, please submit a copy of the filing that does not contain any CBI for inclusion in the public docket that is described in **ADDRESSES**. Information not marked confidential pursuant to 40 CFR part 2 may be disclosed publicly by EPA without prior notice. Submit your copies, identified by docket ID number EPA–HQ–OPP–2007–0081, by one of the following methods.

- *Federal eRulemaking Portal*: *http://www.regulations.gov*. Follow the on-line instructions for submitting comments.
- *Mail*: Office of Pesticide Programs (OPP) Regulatory Public Docket (7502P), Environmental Protection Agency, 1200 Pennsylvania Ave., NW., Washington, DC 20460–0001.
- *Delivery*: OPP Regulatory Public Docket (7502P), Environmental Protection Agency, Rm. S–4400, One Potomac Yard (South Bldg.), 2777 S. Crystal Dr., Arlington, VA. Deliveries are only accepted during the Docket's normal hours of operation (8:30 a.m. to 4 p.m., Monday through Friday, excluding legal holidays). Special arrangements should be made for deliveries of boxed information. The Docket Facility telephone number is (703) 305–5805.

II. Background and Statutory Findings

In the **Federal Register** of July 6, 2007 (Vol. 72, No. 129 (FRL–8136–3), EPA issued a notice pursuant to section 408(d)(3) of FFDCA, 21 U.S.C. 346a(d)(3), announcing the filing of a pesticide tolerance petition (PP 6F7147) by Sensible Life Products (Division of LBD, Ltd.), 34-7 Innovation Dr, Ontario, Canada L9H7H9. The petition requested that 40 CFR part 180 be amended by establishing an exemption from the requirement of a tolerance for residues of thymol in or on food commodities when used as a hard surface disinfectant. This notice included a summary of the petition prepared by the petitioner.

A public comment has been received objecting to ''any tolerance, exemption, or waiver allowing more than zero residue of thymol on food.'' This comment is addressed in Unit VIII.C.

Section 408(c)(2)(A)(i) of FFDCA allows EPA to establish an exemption from the requirement for a tolerance (the legal limit for a pesticide chemical residue in or on a food) only if EPA determines that the exemption is ''safe.'' Section 408(c)(2)(A)(ii) of FFDCA defines ''safe'' to mean that ''there is a reasonable certainty that no harm will result from aggregate exposure to the pesticide chemical residue, including all anticipated dietary exposures and all other exposures for which there is reliable information.'' This includes exposure through drinking water and in residential settings, but does not include occupational exposure. Pursuant to section 408(c)(2)(B) of FFDCA, in establishing or maintaining in effect an exemption from the requirement of a tolerance, EPA must take into account the factors set forth in section 408(b)(2)(C) of FFDCA, which require EPA to give special consideration to exposure of infants and children to the pesticide chemical residue in establishing a tolerance and to ''ensure that there is a reasonable certainty that no harm will result to infants and children from aggregate exposure to the pesticide chemical residue. '' Additionally, section 408(b)(2)(D) of FFDCA requires that the Agency consider ''available information concerning the cumulative effects of a particular pesticide's residues'' and ''other substances that have a common mechanism of toxicity.''

EPA performs a number of analyses to determine the risks from aggregate exposure to pesticide residues. First, EPA determines the toxicity of pesticides. Second, EPA examines exposure to the pesticide through food, drinking water, and through other exposures that occur as a result of pesticide use in residential settings.

III. Toxicological Profile

Consistent with section 408(b)(2)(D) of FFDCA, EPA has reviewed the available scientific data and other relevant information in support of this action and considered its validity, completeness, and reliability and the relationship of this information to human risk. EPA has also considered available information concerning the variability of the sensitivities of major identifiable subgroups of consumers, including infants and children.

Thymol is an essential oil that is extracted from thyme and mandarine and tangerine oils and is FDA approved when used as a synthetic flavoring (21 CFR 172.515), a preservative, and indirect food additive of adhesives (21 CFR 175.105). Additionally, the source plant (thyme), from which thymol is extracted is acknowledged by FDA as generally recognized as safe (GRAS) (21 CFR 182.10, 21 CFR 182.20). Residues of thymol can be found in other food stuffs either naturally such as that found in lime honey or intentionally added to foods such as ice-cream, non-alcoholic beverages, candy, baked goods, and chewing gum.

Based on the following, the Agency has concluded that thymol has minimal potential toxicity and poses minimal risk:

1. Thymol is a normal constituent of the human diet and a component of many non-pesticidal consumer products currently marketed in the United States,
2. Thymol and the phenols of thymol are listed as food additives by the FDA (21 CFR 172.515; synthetic flavoring substances and adjuvants),
3. Thymol is found naturally occurring in thyme herb, a food seasoning ingredient that is generally recognized as safe (GRAS) by the FDA (21 CFR 182.10),
4. Thyme oil (for which thymol is a component) also is recognized as a GRAS essential oil by the FDA (21 CFR 182.20),
5. Thymol can be presumed non-persistent in the environment based on knowledge of its composition,
6. As a conventional pesticide, thymol repels vertebrate pests by a non-toxic mode of action,
7. The available toxicity information does not indicate toxic effects at the levels of potential exposure and

8. EPA is not aware of any adverse effects to humans or the environment in the scientific literature associated with any thymol related use.

IV. Aggregate Exposures

In examining aggregate exposure, section 408 of FFDCA directs EPA to consider available information concerning exposures from the pesticide residue in food and all other non-occupational exposures, including drinking water from ground water or surface water and exposure through pesticide use in gardens, lawns, or buildings (residential and other indoor uses).

A. Dietary Exposure

1. *Food*. Thymol is found naturally in food stuffs such as lime honey and cooking herbs and/or food stuffs derived from cranberry and mandarin and tangerine oils. Thymol is also added to food stuffs commonly consumed by humans such as ice cream, non-alcoholic beverages, candy, baked goods, and chewing gum. It is FDA approved when used as a synthetic flavoring, (21 CFR 172.515), a preservative and indirect food additive of adhesives (21 CFR 175.105) and the source plant (thyme), from which thymol is extracted is acknowledged by FDA as generally recognized as safe (GRAS) (21 CFR 182.10, 21 CFR 182.20). The information and/or data reviewed in support of this tolerance exemption demonstrate that the levels of thymol already present in foods or intentionally added to food stuffs will be at concentrations significantly higher than those levels expected from the use of thymol as a pesticidal product. For example, the U.S. population is potentially exposed to roughly 1,000 times more thymol from the consumption of foodstuffs such as ice cream, cola beverages and candy, to which thymol is intentionally added, than from thymol consumed in as a result of use as a pesticide in food handling establishments. Aggregate exposure to thymol in food, therefore, is primarily due to naturally-occurring thymol and thymol's use as a food additive.

2. *Drinking water exposure*. Exposure to thymol residues in drinking water is not expected since the use of this product is limited to application indoors and release to drinking water sources is unlikely.

B. Other Non-Occupational Exposure

The term ''residential exposure'' is used in this document to refer to non-occupational, non-dietary exposure (e.g., for lawn and garden pest control, indoor pest control, termiticides, and flea and tick control on pets). Thymol is not registered for any specific use patterns that would result in residential exposure.

V. Cumulative Effects

Section 408(b)(2)(D)(v) of FFDCA requires that, when considering whether to establish, modify, or revoke a tolerance, the Agency consider available information concerning the cumulative effects of a particular pesticide's residues and other substances that have a common mechanism of toxicity.

Unlike other pesticides for which EPA has followed a cumulative risk approach based on a common mechanism of toxicity, EPA has not made a common mechanism of toxicity finding as to thymol and any other substances and thymol does not appear to produce a toxic metabolite produced by other substances. Thymol has a novel mode of cellular action (GABAA receptor, sodium, potassium, and calcium channel modulator) compared to other currently registered active ingredients. In addition, there is no indication that toxic effects of thymol would be cumulative. For the purposes of this tolerance action, therefore, EPA has not assumed that thymol has a common mechanism of toxicity with other substances. For information regarding EPA's efforts to determine which chemicals have a common mechanism of toxicity and to evaluate the cumulative effects of such chemicals, see the policy statements released by EPA's Office of Pesticide Programs concerning common mechanism determinations and procedures for cumulating effects from substances found to have a common mechanism on EPA's website at *http://www.epa.gov/pesticides/cumulative./*

VI. Safety Factor for the Protection of Infants and Children

FFDCA section 408 provides that EPA shall apply an additional tenfold margin of exposure (safety) for infants and children in the case of threshold effects to account for prenatal and postnatal toxicity and the completeness of the data base unless the EPA determines that a different margin of exposure (safety) will be safe for infants and children. Based on all the reliable available information the Agency reviewed on thymol, the Agency concludes that there are no residual uncertainties for prenatal/postnatal toxicity resulting from thymol and that thymol has relatively low toxicity to mammals from a dietary standpoint, including infants and children. EPA has determined that a quantitative risk assessment using safety factors is not needed to assess thymol's safety for the general population due to thymol's low toxicity. For similar reasons, an additional safety factor is not necessary to protect infants and children.

VII. Determination of Safety for U.S. Population, Infants and Children

The Agency has determined that there is a reasonable certainty that no harm will result from aggregate exposure to residues of thymol to the U.S. population. This includes all anticipated dietary exposures and other non-occupational exposures for which there is reliable information. The Agency arrived at this conclusion based on the relatively low levels of mammalian dietary toxicity associated with thymol, its presence as a naturally-occurring substance in food, and its FDA approval as a direct food additive, a preservative and indirect food additive of adhesives and GRAS listing as a spice, natural oil, oleoresin, or natural extract.

VIII. Other Considerations

A. Endocrine Disruptors

No studies illustrating thymol-induced immune and endocrine toxicity were submitted by the registrant. EPA is required under FFDCA, as amended by FQPA, to develop a screening program to determine whether certain substances (including all pesticide active and other ingredients) ''may have an effect in humans that is similar to an effect produced by a naturally occurring estrogen, or other such endocrine effects as the Administrator may designate.'' Following the recommendations of its Endocrine Disruptor Screening and Testing Advisory Committee (EDSTAC), EPA determined that there were scientific bases for including, as part of the program, the androgen and thyroid hormone systems, in addition to the estrogen hormone system. EPA also adopted EDSTAC's recommendation that the Program include evaluations of potential effects in wildlife. For pesticide chemicals, EPA will use Federal Insecticide, Fungicide and Rodenticide Act (FIFRA) and, to the extent that effects in wildlife may help determine whether a substance may have an effect in humans, FFDCA has authority to require the wildlife evaluations. As the science develops and resources allow, screening of additional hormone systems may be added to the Endocrine Disruptor Screening Program (EDSP). When the appropriate screening and/or testing protocols being considered under the Agency's EDSP have been developed,

thymol may be subjected to additional screening and/or testing to better characterize effects related to endocrine disruption. Based on available data, no endocrine system-related effects have been identified with consumption of thymol. Information submitted from the public literature and reviewed by the Agency describe immunological endpoints in relation to short-term and chronic dosing. No effects were seen in the thymus, spleen, lymph nodes, white cell counts, red cell counts, hemoglobin counts, or hematocrits following the dosing of rats with 1,000 or 10,000 milligrams/kilograms (mg/kg) of food grade thymol for 19 weeks. (MRID 46282803; Ref. 21).

B. Codex Maximum Residue Level

There are no CODEX maximum residues levels for thymol .

C. Public Comments

1. A commenter argued that no greater than zero residues from thymol should be allowed because embryonic chickens have multiple malformations following thymol injection into the yolk or air sac.

EPA Response: The results from the chicken study are of questionable relevance to mammals. Currently, EPA does not use chickens (or intrayolk or intra-airsac exposure routes) as an animal model for developmental toxicity because of the differences in developmental physiology and anatomy (including absorption barriers and detoxification mechanisms) which are present in mammals. Developmental timing, duration, and potential environmental effects on developing young are also different in mammals and birds, again precluding this model for use in setting developmental toxicity endpoints for the regulation of pesticides.

Developmental malformations have not been found following thymol exposure to mammalian species such as mice, rats, hamsters, and rabbits (Environmental Risk Management Agency of New Zealand, 2005). In addition, Mortazavi *et al.* (2003) reported no external tissue abnormalities in fetuses following dosing of female rats with an infusion of the plant Satureja khuzestanica (which has the components thymol and carvacrol).

2. A commenter argued that no greater than zero residues from thymol should be allowed because thymol is mutagenic.

EPA Response: Although the Agency understands thymol did give statistically significant positive results in an unscheduled DNA synthesis test and a Sister Chromatid Exchange (SCE) test with Syrian hamster embryonic cells, these mutagenicity studies do not comply with the Agency's current test guideline requirements either because of a lack of positive controls, or because a treatment-related dose response was not demonstrated even when statistical significance was achieved. Based on the available toxicity information, its presence in the human diet and several non-pesticidal consumer products, and its long history of use with no known adverse effects to human health and the environment.The Agency reaffirms that there is no need to establish a maximum permissible level for residue of thymol.

IX. Conclusions

Based on the information/data submitted and other information available to the Agency, there is a reasonable certainty that no harm will result from aggregate exposure to residues of thymol to the U.S. population, including infants and children, under reasonable foreseeable circumstances. This includes all anticipated dietary exposures and all other non-occupational exposures for which there is reliable information. The Agency has arrived at this conclusion based on the information/data submitted (and publically available) demonstrating relatively low toxicity of thymol. Further, because thymol residues (as present in thyme oil) in or on food commodities do not pose any significant risk under reasonable foreseeable circumstances, EPA is establishing an exemption from the tolerance requirements pursuant to FFDCA 408(c) and (d) for residues of thymol in or on food commodities

X. Statutory and Executive Order Reviews

This final rule establishes a tolerance under section 408(d) of FFDCA in response to a petition submitted to the Agency. The Office of Management and Budget (OMB) has exempted these types of actions from review under Executive Order 12866, entitled *Regulatory Planning and Review* (58 FR 51735, October 4, 1993). Because this final rule has been exempted from review under Executive Order 12866, this final rule is not subject to Executive Order 13211, *Actions Concerning Regulations That Significantly Affect Energy Supply, Distribution, or Use* (66 FR 28355, May 22, 2001) or Executive Order 13045, entitled *Protection of Children from Environmental Health Risks and Safety Risks* (62 FR 19885, April 23, 1997). This final rule does not contain any information collections subject to OMB approval under the Paperwork Reduction Act (PRA), 44 U.S.C. 3501 *et seq.*, nor does it require any special considerations under Executive Order 12898, entitled *Federal Actions to Address Environmental Justice in Minority Populations and Low-Income Populations* (59 FR 7629, February 16, 1994).

Since tolerances and exemptions that are established on the basis of a petition under section 408(d) of FFDCA, such as the tolerance in this final rule, do not require the issuance of a proposed rule, the requirements of the Regulatory Flexibility Act (RFA) (5 U.S.C. 601 *et seq.*) do not apply.

This final rule directly regulates growers, food processors, food handlers, and food retailers, not States or tribes, nor does this action alter the relationships or distribution of power and responsibilities established by Congress in the preemption provisions of section 408(n)(4) of FFDCA. As such, the Agency has determined that this action will not have a substantial direct effect on States or tribal governments, on the relationship between the national government and the States or tribal governments, or on the distribution of power and responsibilities among the various levels of government or between the Federal Government and Indian tribes. Thus, the Agency has determined that Executive Order 13132, entitled *Federalism* (64 FR 43255, August 10, 1999) and Executive Order 13175, entitled *Consultation and Coordination with Indian Tribal Governments* (65 FR 67249, November 9, 2000) do not apply to this final rule. In addition, this final rule does not impose any enforceable duty or contain any unfunded mandate as described under Title II of the Unfunded Mandates Reform Act of 1995 (UMRA) (Public Law 104–4).

This action does not involve any technical standards that would require Agency consideration of voluntary consensus standards pursuant to section 12(d) of the National Technology Transfer and Advancement Act of 1995 (NTTAA), Public Law 104–113, section 12(d) (15 U.S.C. 272 note).

XI. Congressional Review Act

The Congressional Review Act, 5 U.S.C. 801 *et seq.*, generally provides that before a rule may take effect, the agency promulgating the rule must submit a rule report to each House of the Congress and to the Comptroller General of the United States. EPA will submit a report containing this rule and other required information to the U.S. Senate, the U.S. House of Representatives, and the Comptroller General of the United States prior to publication of this final rule in the **Federal Register**. This final rule is not

a ''major rule'' as defined by 5 U.S.C. 804(2).

List of Subjects in 40 CFR Part 180

Environmental protection, Administrative practice and procedure, Agricultural commodities, Pesticides and pests, Reporting and recordkeeping requirements.

Dated: March 3, 2009.

Joan Harrigan-Farrelly,

Director, Antimicrobials Division, Office of Pesticide Programs.

■ Therefore, 40 CFR chapter I is amended as follows:

PART 180—[AMENDED]

■ 1. The authority citation for part 180 continues to read as follows:

Authority: 21 U.S.C. 321(q), 346a and 371.

■ 2. Section 180.1240, paragraph (b) is revised to read as follows:

§ 180.1240 Thymol; exemption from the requirement of a tolerance.

* * * * *

(b) An exemption from the requirement of a tolerance for residues of the thymol (as present in thyme oil) in or on food commodities when applied/used in/on public eating places, dairy processing equipment, and/or food processing equipment and utensils.

[FR Doc. E9–6262 Filed 3–24–09; 8:45 am]

BILLING CODE 6560–50–S

ENVIRONMENTAL PROTECTION AGENCY

40 CFR Part 180

[EPA–HQ–OPP–2008–0346; FRL–8404–1]

Triethanolamine; Exemption from the Requirement of a Tolerance

AGENCY: Environmental Protection Agency (EPA).

ACTION: Final rule.

SUMMARY: This regulation establishes an exemption from the requirement of a tolerance for residues of triethanolamine (CAS Reg. No. 102–71–6) when used as an inert ingredient in pesticide formulations applied to growing crops under 40 CFR 180.920. Bayer CropScience, LP submitted a petition to EPA under the Federal Food, Drug, and Cosmetic Act (FFDCA), requesting an expansion of the existing § 180.920 exemption from the requirement of a tolerance. This regulation eliminates the need to establish a maximum permissible level for residues of triethanolamine.

DATES: This regulation is effective March 25, 2009. Objections and requests for hearings must be received on or before May 26, 2009, and must be filed in accordance with the instructions provided in 40 CFR part 178 (see also Unit I.C. of the **SUPPLEMENTARY INFORMATION**).

ADDRESSES: EPA has established a docket for this action under docket identification (ID) number EPA–HQ–OPP–2008–0346. All documents in the docket are listed in the docket index available at *http://www.regulations.gov*. Although listed in the index, some information is not publicly available, e.g., Confidential Business Information (CBI) or other information whose disclosure is restricted by statute. Certain other material, such as copyrighted material, is not placed on the Internet and will be publicly available only in hard copy form. Publicly available docket materials are available in the electronic docket at *http://www.regulations.gov*, or, if only available in hard copy, at the OPP Regulatory Public Docket in Rm. S–4400, One Potomac Yard (South Bldg.), 2777 S. Crystal Dr., Arlington, VA. The Docket Facility is open from 8:30 a.m. to 4 p.m., Monday through Friday, excluding legal holidays. The Docket Facility telephone number is (703) 305–5805.

FOR FURTHER INFORMATION CONTACT: Keri Grinstead, Registration Division (7505P), Office of Pesticide Programs, Environmental Protection Agency, 1200 Pennsylvania Ave., NW., Washington, DC 20460–0001; telephone number: (703) 308–8373; e-mail address: *grinstead.keri@epa.gov*.

SUPPLEMENTARY INFORMATION:

I. General Information

A. Does this Action Apply to Me?

You may be potentially affected by this action if you are an agricultural producer, food manufacturer, or pesticide manufacturer. Potentially affected entities may include, but are not limited to:

- Crop production (NAICS code 111).
- Animal production (NAICS code 112).
- Food manufacturing (NAICS code 311).
- Pesticide manufacturing (NAICS code 32532).

This listing is not intended to be exhaustive, but rather provides a guide for readers regarding entities likely to be affected by this action. Other types of entities not listed in this unit could also be affected. The North American Industrial Classification System (NAICS) codes have been provided to assist you and others in determining whether this action might apply to certain entities. If you have any questions regarding the applicability of this action to a particular entity, consult the person listed under **FOR FURTHER INFORMATION CONTACT**.

B. How Can I Access Electronic Copies of this Document?

In addition to accessing electronically available documents at *http://www.regulations.gov*, you may access this **Federal Register** document electronically through the EPA Internet under the ''**Federal Register**'' listings at *http://www.epa.gov/fedrgstr*. You may also access a frequently updated electronic version of 40 CFR part 180 through the Government Printing Office's e-CFR cite at *http://www.gpoaccess.gov/ecfr*.

C. Can I File an Objection or Hearing Request?

Under section 408(g) of FFDCA, 21 U.S.C. 346a, any person may file an objection to any aspect of this regulation and may also request a hearing on those objections. The EPA procedural regulations which govern the submission of objections and requests for hearings appear in 40 CFR part 178. You must file your objection or request a hearing on this regulation in accordance with the instructions provided in 40 CFR part 178. To ensure proper receipt by EPA, you must identify docket ID number EPA–HQ–OPP–2008–0346 in the subject line on the first page of your submission. All requests must be in writing, and must be mailed or delivered to the Hearing Clerk on or before May 26, 2009.

In addition to filing an objection or hearing request with the Hearing Clerk as described in 40 CFR part 178, please submit a copy of the filing that does not contain any CBI for inclusion in the public docket that is described in **ADDRESSES**. Information not marked confidential pursuant to 40 CFR part 2 may be disclosed publicly by EPA without prior notice. Submit your copies, identified by docket ID number EPA–HQ–OPP–2008–0346, by one of the following methods:

- *Federal eRulemaking Portal*: *http://www.regulations.gov*. Follow the on-line instructions for submitting comments.
- *Mail*: Office of Pesticide Programs (OPP) Regulatory Public Docket (7502P), Environmental Protection Agency, 1200 Pennsylvania Ave., NW., Washington, DC 20460–0001.
- *Delivery*: OPP Regulatory Public Docket (7502P), Environmental Protection Agency, Rm. S–4400, One

Potomac Yard (South Bldg.), 2777 S. Crystal Dr., Arlington, VA. Deliveries are only accepted during the Docket Facility's normal hours of operation (8:30 a.m. to 4 p.m., Monday through Friday, excluding legal holidays). Special arrangements should be made for deliveries of boxed information. The Docket Facility telephone number is (703) 305–5805.

II. Background and Statutory Findings

In the **Federal Register** of June 4, 2008 (73 FR 31862) (FRL–8365–3), EPA issued a notice pursuant to section 408 of FFDCA, 21 U.S.C. 346a, as amended by FQPA (Public Law 104–170), announcing the filing of a pesticide petition (PP 8E7332) by Bayer CropScience LP, P.O. Box 12014, 2 T.W. Alexander Dr., Research Triangle Park, NC 27709. The petition requested that the exemption in 40 CFR 180.920 for triethanolamine be amended by removing the restriction that triethanolamine could only be used in formulations applied before the crop emerged from the soil. That notice included a summary of the petition prepared by the petitioner. There were no comments received in response to the notice of filing.

Section 408(b)(2)(A)(i) of FFDCA allows EPA to establish an exemption from the requirement for a tolerance (the legal limit for a pesticide chemical residue in or on a food) only if EPA determines that the tolerance is ''safe.'' Section 408(b)(2)(A)(ii) of FFDCA defines ''safe'' to mean that ''there is a reasonable certainty that no harm will result from aggregate exposure to the pesticide chemical residue, including all anticipated dietary exposures and all other exposures for which there is reliable information.'' This includes exposure through drinking water and in residential settings, but does not include occupational exposure. Section 408(b)(2)(C) of FFDCA requires EPA to give special consideration to exposure of infants and children to the pesticide chemical residue in establishing a tolerance and to ''ensure that there is a reasonable certainty that no harm will result to infants and children from aggregate exposure to the pesticide chemical residue. . . .''

EPA performs a number of analyses to determine the risks from aggregate exposure to pesticide residues. First, EPA determines the toxicity of pesticides. Second, EPA examines exposure to the pesticide through food, drinking water, and through other exposures that occur as a result of pesticide use in residential settings.

III. Inert Ingredient Definition

Inert ingredients are all ingredients that are not active ingredients as defined in 40 CFR 153.125 and include, but are not limited to, the following types of ingredients (except when they have a pesticidal efficacy of their own): Solvents such as alcohols and hydrocarbons; surfactants such as polyoxyethylene ploymers and fatty acids; carriers such as clay and diatomaceous earth; thickeners such as carrageenan and modified cellulose; wetting, spreading, and dispersing agents; propellants in aerosol dispensers; microencapsulating agents; and emulsifiers. The term ''inert'' is not intended to imply nontoxicity; the ingredient may or may not be chemically active. Generally, EPA has exempted inert ingredients from the requirement of a tolerance based on the low toxicity of the individual inert ingredients.

IV. Toxicological Profile

Consistent with section 408(b)(2)(D) of FFDCA, EPA has reviewed the available scientific data and other relevant information in support of this action and considered its validity, completeness and reliability and the relationship of this information to human risk. EPA has also considered available information concerning the variability of the sensitivities of major identifiable subgroups of consumers, including infants and children. The nature of the toxic effects caused by triethanolamine are discussed in this unit.

Triethanolamine has an existing exemption from tolerance under 40 CFR 180.920 when used as an inert ingredient in pesticide formulations applied before the crop emerges from the soil. This exemption was reassessed by EPA in 2006 and the reassessment document can be found at *http://www.epa.gov/opprd001/inerts/decisiondoc_a2k.html*. For ease of reading, triethanolamine is referred to as TEA. Summaries of the assessment for TEA are presented in this final rule. For more detailed information, refer to the docket for the more comprehensive assessment/decision document.

In animal studies, TEA has low acute toxicity via the oral and dermal routes, was nonirritating in eye and skin irritation studies, and did not induce skin sensitization. In repeat-dose testing, the main effect was on the liver and kidney with adverse effects seen at oral doses > 170 milligrams/kilogram/day (mg/kg/day). TEA is unlikely to be carcinogenic and studies indicate it is not mutagenic or developmentally toxic. Reproductive parameters were not affected in rats and mice treated dermally with TEA. When ingested, TEA appears to be rapidly absorbed in the gastrointestinal tract. In rodent studies, TEA was eliminated largely unchanged in the urine and feces within 2 days.

V. Aggregate Exposures

In examining aggregate exposure, section 408 of FFDCA directs EPA to consider available information concerning exposures from the pesticide residue in food and all other non-occupational exposures, including drinking water from ground water or surface water and exposure through pesticide use in gardens, lawns, or buildings (residential and other indoor uses).

EPA establishes exemptions from the requirement of a tolerance only in those cases where it can be clearly demonstrated that the risks from aggregate exposure to pesticide chemical residues under reasonably foreseeable circumstances will pose no appreciable risks to human health. In order to determine the risks from aggregate exposure to pesticide inert ingredients, the Agency considers the toxicity of the inert in conjunction with possible exposure to residues of the inert ingredient through food, drinking water, and through other exposures that occur as a result of pesticide use in residential settings. If EPA is able to determine that a finite tolerance is not necessary to ensure that there is a reasonable certainty that no harm will result from aggregate exposure to the inert ingredient, an exemption from the requirement of a tolerance may be established.

The primary route of exposure to TEA from its use as an inert ingredient in pesticide products applied to growing crops would most likely be through consumption of food to which pesticide products containing TEA have been applied, and possibly through drinking water (from runoff). Residential (dermal and inhalation) exposures are also possible from the use of home garden pesticide products containing TEA as an inert ingredient.

There are no data provided regarding TEA residues in food or any other nonoccupational exposures to TEA. In the absence of actual residue data for TEA, the Agency performed a dietary (food and drinking water) exposure assessment for TEA when used as an inert ingredient in pesticide formulations applied to growing crops by using a series of very conservative assumptions. This exposure assessment was calculated based on the following

assumptions: (1) TEA would be used as an inert ingredient in all food use pesticide formulations applied to all crops, (2) 100% of all food crops would be treated with pesticide products containing TEA, (3) TEA residues would be present in all crops at levels equal to or exceeding the highest established tolerance levels for any pesticide active ingredient, and (4) TEA would be present in all sources of drinking water at concentrations equal to the highest established standards for drinking water contaminants established by EPA. This approach is highly conservative as it is extremely unlikely that TEA would have such use as a pesticide product inert ingredient and be present in food commodities and drinking water at such high levels. In addition, this highly conservative exposure assessment is protective of any possible non-occupational exposures to TEA, as it results in exposure estimates which are orders of magnitude greater than the high-end exposure estimates for residential uses of pesticides routinely used by EPA's Office of Pesticide Programs.

VI. Cumulative Effects

Section 408(b)(2)(D)(v) of the FFDCA requires that, when considering whether to establish, modify, or revoke a tolerance, the Agency consider ''available information'' concerning the cumulative effects of a particular pesticide's residues and ''other substances that have a common mechanism of toxicity.''

Unlike other pesticides for which EPA has followed a cumulative risk approach based on a common mechanism of toxicity, EPA has not made a common mechanism of toxicity finding as to TEA and any other substances and, TEA does not appear to produce a toxic metabolite produced by other substances. For the purposes of this tolerance action, therefore, EPA has not assumed that TEA has a common mechanism of toxicity with other substances. For information regarding EPA's efforts to determine which chemicals have a common mechanism of toxicity and to evaluate the cumulative effects of such chemicals, see the policy statements released by EPA's Office of Pesticide Programs concerning common mechanism determinations and procedures for cumulating effects from substances found to have a common mechanism on EPA's website at *http://www.epa.gov/pesticides/cumulative/*.

VII. Safety Factor for the Protection of Infants and Children

Section 408(b)(2)(c) of FFDCA provides that EPA shall apply an additional tenfold (10X) margin of safety for infants and children in the case of threshold effects to account for prenatal and postnatal toxicity and the completeness of the database on toxicity and exposure unless EPA determines based on reliable data that a different margin of safety will be safe for infants and children. This additional margin of safety is commonly referred to as the FQPA safety factor (SF). In applying this provision, EPA either retains the default value of 10X, or uses a different additional safety factor when reliable data available to EPA support the choice of a different factor. EPA has determined that reliable data show the safety of infants and children would be adequately protected if the FQPA SF were reduced to 1X. That decision is based on the following findings:

1. The database is considered adequate for FQPA assessment based on available subchronic (rats), chronic/carcinogenicity (rats and mice), developmental (rats and mice), and reproduction (rats and mice) toxicity studies. No acute or subchronic neurotoxicity studies are available, but there were no clinical signs of neurotoxicity observed in the available database. Therefore, the Agency concluded that these studies are not required. In addition, the developmental neurotoxicity study is not required because there is no evidence of increased susceptibility to infants and children in the available developmental and reproduction studies in rats and mice and no clinical signs of neurotoxicity in the available studies. Based on the overall evidence, the Agency concluded that the database for triethanolamine is adequate for FQPA.

2. Based on the developmental toxicity studies, EPA concludes that there is no evidence of increased susceptibility to infants and children. Developmental toxicity study in rats via the dermal route resulted in no biologically significant effects in the offspring or in the maternal animals. An oral Chernoff-Kavlock screening test resulted in a no observed adverse effect level (NOAEL) of 1,125 mg/kg/day in mice and it was determined that oral administration of the test material did not affect maternal mortality, the number of viable litters, length of gestation, litter size, percent survival of the pups or birth weight or weight gained by the pups. No quantitative or qualitative evidence of susceptibility was observed from any of the currently available toxicological data.

3. No reproductive parameters were affected in rat and mice treated dermally at doses up to 2,000 and 4,000 mg/kg/day, respectively.

4. No evidence of treatment related clinical signs of neurotoxicity was observed in the available toxicological studies. EPA concluded that the developmental neurotoxicity study is not required.

5. The highly conservative dietary exposure assessment using default assumptions would not underestimate the risk to infants and children.

VIII. Determination of Safety for U.S. Population

For hazards that have a threshold below which there is no appreciable risk, a toxicological point of departure (POD) is identified as the basis for derivation of reference values for risk assessment. The POD may be defined as the highest dose at which no adverse effects are observed (the NOAEL) in the toxicology study identified as appropriate for use in risk assessment. Uncertainty/safety factors (UFs) are used in conjunction with the POD to take into account uncertainties inherent in the extrapolation from laboratory animal data to humans and in the variations in sensitivity among members of the human population as well as other unknowns. Safety is assessed for acute and chronic dietary risks by comparing aggregate food and water exposure to the pesticide to the acute population adjusted dose (aPAD) and chronic population adjusted dose (cPAD). The aPAD and cPAD are calculated by dividing the POD by all applicable UFs.

Residues of concern are not anticipated for dietary exposure (food and drinking water) or for residential exposure (inhalation and dermal) from the use of TEA as an inert ingredient in pesticide products. The toxicology data indicate that TEA does not pose an acute risk. Chronic risk was assessed by comparing aggregate exposure to TEA to a cPAD of 1.70 mg/kg/day (based on the subchronic oral rat study with a NOAEL of 170 mg/kg/day and a safety/uncertainty factor of 100X). Utilizing the highly conservative aggregate exposure assessment described above, the resulting chronic exposure estimates do not exceed the Agency's level of concern (children 1–2 years were the most highly exposed population with the chronic exposure estimates occupying 26.6% of the cPAD). In addition, this highly conservative exposure assessment is protective of any possible non-occupational exposures to TEA, as it results in exposure estimates orders of magnitude greater than the high-end exposure estimates for residential uses of pesticides routinely used by EPA's Office of Pesticide Programs.

Taking into consideration all available information on TEA, EPA concludes that there is a reasonable certainty that no harm will result to the general population or to infants and children from aggregate exposure to TEA residues. Therefore, the establishment of an exemption from the requirement of a tolerance under 40 CFR 180.920 for residues of TEA when used as an inert ingredient in pesticide formulations applied to growing crops, is safe under section 408(q) of the FFDCA.

IX. Other Considerations

A. Analytical Method

An analytical method is not required for enforcement purposes since the Agency is establishing an exemption from the requirement of a tolerance without any numerical limitation.

B. Existing Exemptions

Triethanolamine has an existing exemption from the requirement of a tolerance under 40 CFR 180.920 for use as an inert ingredient in pesticide formulations applied before the crop emerges from the soil.

C. International Tolerances

The Agency is not aware of any country requiring a tolerance for triethanoloamine nor have any CODEX Maximum Residue Levels (MRLs) been established for any food crops at this time.

X. Conclusions

Therefore, an exemption from the requirement for a tolerance is established for triethanolamine when used as an inert ingredient in pesticide formulations applied to growing crops.

XI. Statutory and Executive Order Reviews

This final rule establishes a tolerance under section 408(d) of FFDCA in response to a petition submitted to the Agency. The Office of Management and Budget (OMB) has exempted these types of actions from review under Executive Order 12866, entitled *Regulatory Planning and Review* (58 FR 51735, October 4, 1993). Because this final rule has been exempted from review under Executive Order 12866, this final rule is not subject to Executive Order 13211, entitled *Actions Concerning Regulations That Significantly Affect Energy Supply, Distribution, or Use* (66 FR 28355, May 22, 2001) or Executive Order 13045, entitled *Protection of Children from Environmental Health Risks and Safety Risks* (62 FR 19885, April 23, 1997). This final rule does not contain any information collections subject to OMB approval under the Paperwork Reduction Act (PRA), 44 U.S.C. 3501 *et seq.*, nor does it require any special considerations under Executive Order 12898, entitled *Federal Actions to Address Environmental Justice in Minority Populations and Low-Income Populations* (59 FR 7629, February 16, 1994).

Since tolerances and exemptions that are established on the basis of a petition under section 408(d) of FFDCA, such as the tolerance in this final rule, do not require the issuance of a proposed rule, the requirements of the Regulatory Flexibility Act (RFA) (5 U.S.C. 601 *et seq.*) do not apply.

This final rule directly regulates growers, food processors, food handlers, and food retailers, not States or tribes, nor does this action alter the relationships or distribution of power and responsibilities established by Congress in the preemption provisions of section 408(n)(4) of FFDCA. As such, the Agency has determined that this action will not have a substantial direct effect on States or tribal governments, on the relationship between the national government and the States or tribal governments, or on the distribution of power and responsibilities among the various levels of government or between the Federal Government and Indian tribes. Thus, the Agency has determined that Executive Order 13132, entitled *Federalism* (64 FR 43255, August 10, 1999) and Executive Order 13175, entitled *Consultation and Coordination with Indian Tribal Governments* (65 FR 67249, November 9, 2000) do not apply to this final rule. In addition, this final rule does not impose any enforceable duty or contain any unfunded mandate as described under Title II of the Unfunded Mandates Reform Act of 1995 (UMRA) (Public Law 104–4).

This action does not involve any technical standards that would require Agency consideration of voluntary consensus standards pursuant to section 12(d) of the National Technology Transfer and Advancement Act of 1995 (NTTAA), Public Law 104–113, section 12(d) (15 U.S.C. 272 note).

XII. Congressional Review Act

The Congressional Review Act, 5 U.S.C. 801 *et seq.*, generally provides that before a rule may take effect, the agency promulgating the rule must submit a rule report to each House of the Congress and to the Comptroller General of the United States. EPA will submit a report containing this rule and other required information to the U.S. Senate, the U.S. House of Representatives, and the Comptroller General of the United States prior to publication of this final rule in the **Federal Register**. This final rule is not a ''major rule'' as defined by 5 U.S.C. 804(2).

List of Subjects in 40 CFR Part 180

Environmental protection, Administrative practice and procedure, Agricultural commodities, Pesticides and pests, Reporting and recordkeeping requirements.

Dated: March 3, 2009.

Lois Rossi,

Director, Registration Division, Office of Pesticide Programs.

■ Therefore, 40 CFR chapter I is amended as follows:

PART 180—[AMENDED]

■ 1. The authority citation for part 180 continues to read as follows:

Authority: 21 U.S.C. 321(q), 346a and 371.

■ 2. In § 180.920, the table is amended by revising the entry for ''Triethanolamine'' to read as follows:

§ 180.920 Inert ingredients used pre-harvest; exemptions from the requirement of a tolerance.

* * * * *

Inert ingredients	Limits	Uses
* *	* * *	
Triethanolamine (CAS Reg. No. 102–71–6)		Stabilizer, inhibitor
* *	* * *	

[FR Doc. E9–6263 Filed 3–24–09; 8:45 am]
BILLING CODE 6560–50–S

ENVIRONMENTAL PROTECTION AGENCY

40 CFR Part 180

[EPA–HQ–OPP–2008–0095; FRL–8404–7]

Tristyrylphenol Ethoxylates (CAS Reg. No. 70559-25-0) and (CAS Reg. No. 99734-09-5); Exemption from the Requirement of a Tolerance

AGENCY: Environmental Protection Agency (EPA).

ACTION: Final rule.

SUMMARY: This regulation establishes an exemption from the requirement of a tolerance for residues of poly(oxy-1,2-ethanediyl), α-[2,4,6-tris(1-phenylethyl)phenyl]-ω-hydroxy- (CAS Reg. No. 70559–25–0) and poly(oxy-1,2-ethanediyl), α-[tris(1-phenylethyl)phenyl]-ω-hydroxy-, (CAS Reg. No. 99734–09–5), herein referred to in this document as tristyrylphenol ethoxylates when used as inert ingredients in post-harvest applications to citrus crops, group 10, under 40 CFR 180.1288 at a maximum of 10.0% in pesticide formulations with azoxystrobin and fludioxonil. Syngenta Crop Protection, Inc. submitted a petition to EPA under the Federal Food, Drug, and Cosmetic Act (FFDCA), requesting an exemption from the requirement of a tolerance. This regulation eliminates the need to establish a maximum permissible level for residues of the tristyrylphenol ethoxylates.

DATES: This regulation is effective March 25, 2009. Objections and requests for hearings must be received on or before May 26, 2009, and must be filed in accordance with the instructions provided in 40 CFR part 178 (see also Unit I.C. of the **SUPPLEMENTARY INFORMATION**).

ADDRESSES: EPA has established a docket for this action under docket identification (ID) number EPA–HQ–OPP–2008–0095. All documents in the docket are listed in the docket index available at *http://www.regulations.gov*. Although listed in the index, some information is not publicly available, e.g., Confidential Business Information (CBI) or other information whose disclosure is restricted by statute. Certain other material, such as copyrighted material, is not placed on the Internet and will be publicly available only in hard copy form. Publicly available docket materials are available in the electronic docket at *http://www.regulations.gov*, or, if only available in hard copy, at the OPP Regulatory Public Docket in Rm. S–4400, One Potomac Yard (South Bldg.), 2777 S. Crystal Dr., Arlington, VA. The Docket Facility is open from 8:30 a.m. to 4 p.m., Monday through Friday, excluding legal holidays. The Docket Facility telephone number is (703) 305–5805.

FOR FURTHER INFORMATION CONTACT: Karen Samek, Registration Division (7505P), Office of Pesticide Programs, Environmental Protection Agency, 1200 Pennsylvania Ave., NW., Washington, DC 20460–0001; telephone number: (703) 347–8825; e-mail address: *samek.karen@epa.gov*.

SUPPLEMENTARY INFORMATION:

I. General Information

A. Does this Action Apply to Me?

You may be potentially affected by this action if you are an agricultural producer, food manufacturer, or pesticide manufacturer. Potentially affected entities may include, but are not limited to:

- Crop production (NAICS code 111).
- Animal production (NAICS code 112).
- Food manufacturing (NAICS code 311).
- Pesticide manufacturing (NAICS code 32532).

This listing is not intended to be exhaustive, but rather provides a guide for readers regarding entities likely to be affected by this action. Other types of entities not listed in this unit could also be affected. The North American Industrial Classification System (NAICS) codes have been provided to assist you and others in determining whether this action might apply to certain entities. If you have any questions regarding the applicability of this action to a particular entity, consult the person listed under **FOR FURTHER INFORMATION CONTACT**.

B. How Can I Access Electronic Copies of this Document?

In addition to accessing electronically available documents at *http://www.regulations.gov*, you may access this **Federal Register** document electronically through the EPA Internet under the **Federal Register** listings at *http://www.epa.gov/fedrgstr*. You may also access a frequently updated electronic version of 40 CFR part 180 through the Government Printing Office's e-CFR cite at *http://www.gpoaccess.gov/ecfr*.

C. Can I File an Objection or Hearing Request?

Under section 408(g) of FFDCA, 21 U.S.C. 346a, any person may file an objection to any aspect of this regulation and may also request a hearing on those objections. The EPA procedural regulations which govern the submission of objections and requests for hearings appear in 40 CFR part 178. You must file your objection or request a hearing on this regulation in accordance with the instructions provided in 40 CFR part 178. To ensure proper receipt by EPA, you must identify docket ID number EPA–HQ–OPP–2008–0095 in the subject line on the first page of your submission. All requests must be in writing, and must be mailed or delivered to the Hearing Clerk on or before May 26, 2009.

In addition to filing an objection or hearing request with the Hearing Clerk as described in 40 CFR part 178, please submit a copy of the filing that does not contain any CBI for inclusion in the public docket that is described in **ADDRESSES**. Information not marked confidential pursuant to 40 CFR part 2 may be disclosed publicly by EPA without prior notice. Submit your copies, identified by docket ID number EPA–HQ–OPP–2008–0095, by one of the following methods:

- *Federal eRulemaking Portal*: *http://www.regulations.gov*. Follow the on-line instructions for submitting comments.
- *Mail*: Office of Pesticide Programs (OPP) Regulatory Public Docket (7502P), Environmental Protection Agency, 1200 Pennsylvania Ave., NW., Washington, DC 20460–0001.
- *Delivery*: OPP Regulatory Public Docket (7502P), Environmental Protection Agency, Rm. S–4400, One Potomac Yard (South Bldg.), 2777 S. Crystal Dr., Arlington, VA. Deliveries are only accepted during the Docket Facility's normal hours of operation (8:30 a.m. to 4 p.m., Monday through Friday, excluding legal holidays). Special arrangements should be made for deliveries of boxed information. The Docket Facility telephone number is (703) 305–5805.

II. Background and Statutory Findings

In the **Federal Register** of March 12, 2008 (73 FR 13225) (FRL–8354–6), EPA issued a notice pursuant to section 408 of FFDCA, 21 U.S.C. 346a, as amended by FQPA (Public Law 104–170), announcing the filing of a pesticide petition (PP 7E7305) by Syngenta Crop Protection, Inc., P.O. Box 18300, Greensboro, NC 27409. The petition requested that 40 CFR 180.910 be amended by establishing an exemption

from the requirement of a tolerance for residues of the tristyrylphenol ethoxylates when used as inert ingredients in post-harvest applications at a maximum of 10.0% in pesticide formulations. That notice included a summary of the petition prepared by the petitioner. This request is specific for the post-harvest uses of these tristyrylphenol ethoxylates and does not impact the existing pre-harvest tolerance exemptions under 40 CFR 180.920 granted by the Agency for these tristyrylphenol ethoxylates with a limit of not more than 15% in pesticide formulations. There were no comments received in response to the notice of filing.

Section 408(b)(2)(A)(i) of FFDCA allows EPA to establish an exemption from the requirement for a tolerance (the legal limit for a pesticide chemical residue in or on a food) only if EPA determines that the tolerance is ''safe.'' Section 408(b)(2)(A)(ii) of FFDCA defines ''safe'' to mean that ''there is a reasonable certainty that no harm will result from aggregate exposure to the pesticide chemical residue, including all anticipated dietary exposures and all other exposures for which there is reliable information.'' This includes exposure through drinking water and in residential settings, but does not include occupational exposure. Section 408(b)(2)(C) of FFDCA requires EPA to give special consideration to exposure of infants and children to the pesticide chemical residue in establishing a tolerance and to ''ensure that there is a reasonable certainty that no harm will result to infants and children from aggregate exposure to the pesticide chemical residue. . . .''

EPA performs a number of analyses to determine the risks from aggregate exposure to pesticide residues. First, EPA determines the toxicity of pesticides. Second, EPA examines exposure to the pesticide through food, drinking water, and through other exposures that occur as a result of pesticide use in residential settings.

III. Inert Ingredient Definition

Inert ingredients are all ingredients that are not active ingredients as defined in 40 CFR 153.125 and include, but are not limited to, the following types of ingredients (except when they have a pesticidal efficacy of their own): Solvents such as alcohols and hydrocarbons; surfactants such as polyoxyethylene ploymers and fatty acids; carriers such as clay and diatomaceous earth; thickeners such as carrageenan and modified cellulose; wetting, spreading, and dispersing agents; propellants in aerosol dispensers; microencapsulating agents; and emulsifiers. The term ''inert'' is not intended to imply nontoxicity; the ingredient may or may not be chemically active. Generally, EPA has exempted inert ingredients from the requirement of a tolerance based on the low toxicity of the individual inert ingredients.

IV. Toxicological Profile

Consistent with section 408(b)(2)(D) of FFDCA, EPA has reviewed the available scientific data and other relevant information in support of this action and considered its validity, completeness and reliability and the relationship of this information to human risk. EPA has also considered available information concerning the variability of the sensitivities of major identifiable subgroups of consumers, including infants and children. The nature of the toxic effects caused by the tristyrylphenol ethoxylates are discussed in this unit.

In 2006, EPA reassessed the inert ingredient tolerance exemptions under 40 CFR 180.920 for the tristyrylphenol ethoxylates when used as inert ingredients at not more than 15% in pesticide formulations applied to growing crops. This tolerance reassessment document can be found at *http://www.epa.gov/opprd001/inerts/decisiondoc_a2k.html*. As stated in that document, the tristyrylphenol ethoxylates have similar use patterns, restrictions/limitations, and potential exposures. A Structure Activity Relationship (SAR) assessment for the tristyrylphenol ethoxylates was performed by the Agency's Office of Pollution Prevention and Toxics (OPPT) Structure Activity Team (SAT). In the 2006 document, the SAT determined that the data presented on the analog compounds within the tristyrylphenol ethoxalates are adequate to characterize the expected toxicity of subject chemicals (CAS Reg. Nos. 70559–25–0 and 99734–09–5) for the reasons set forth in Unit VII below. The available toxicity database for the tristyrylphenol ethoxylates consists of studies on some of the tristyrylphenol ethoxylate chemicals, such as CAS Reg. No. 90093–37–1 and 119432–41–6, and guideline studies on an analog chemical, CAS Reg. No. 105362–40–1. The studies on the tristyrylphenol ethoxylate chemicals and analog chemicals were considered appropriate to evaluate the toxicity of the tristyrylphenol ethoxylates because these chemicals share a common chemical structure and are members of the same chemical class. The tristyrylphenol ethoxylates and analog chemicals share a close structural similarity and same functional groups with the only difference being in the associated counterions. Therefore, the toxicity of these chemicals are expected to be similar.

An acute toxicity battery conducted on the tristyrylphenol ethoxylates resulted in low acute oral toxicity, slight skin irritation, and slight eye irritation. In subchronic toxicity studies, the primary toxicity appears to be to the kidney and thyroid in rats and the liver in dogs. The kidney effects in rats appear to be the most sensitive endpoint. In this study, there were minimal effects observed at 100 milligrams/kilogram/day (mg/kg/day) but these effects were not considered adverse effects. Therefore, the no observed effect level (NOEL) for the study was 30 mg/kg/day and the no observed adverse effect level (NOAEL) was 100 mg/kg/day. No neurotoxicity studies are available; however, no signs of neurotoxicity were observed in any of the available studies.

Based on the results of submitted mutagenicity studies, the tristyrylphenol ethoxylates are not likely to be mutagenic. There are no carcinogenicity studies available on the tristyrylphenol ethoxylates; however, the primary toxicity appears to be to the kidney and thyroid in rats and liver in dogs. The kidney effects in rats appear to be the most sensitive endpoint. The Agency has considerable knowledge of the intratubular mineralization toxic effect to the kidneys and has determined that by preventing the intratubular mineralization in the kidney, tumor formation is unlikely to occur. Since these kidney effects are the most sensitive endpoint, protective measures for kidney toxicity will be protective of any other long term effects. The thyroid toxicity in rats was observed at 1,500 mg/kg/day and the NOAEL was 500 mg/kg/day. The Agency has determined the mode of action of the compound causing thyroid toxicity and concluded that a dose preventing thyroid toxicity would be protective of both cancer and non cancer effects on the thyroid. In addition, the Agency also recognizes that the rats are more sensitive to thyroid effects than humans. The NOAEL used as the point of departure in calculating the chronic reference dose (cRfD) selected for this risk assessment is protective of any thyroid effects and is approximately 10 fold lower than the NOAEL established for the thyroid effects. There is not a concern for the liver toxicity seen in the dog study because the liver effects at dosages of 500 mg/kg/day were marginal and seen in only one dog out of six. The SAR models predicted low concern for the

carcinogenicity of the compounds. Considering the lack of mutagenicity, the lack of target organ toxicity in subchronic studies and known mode of action for the target organ toxicity seen, and the SAR prediction, the Agency concluded that carcinogenicity concerns are unlikely for the tristyrylphenol ethoxylates.

The developmental toxicity study in which rats were administered CAS Reg. No. 119432–41–6, resulted in a NOAEL of 300 mg/kg/day for maternal toxicity (based on reduced body weights and increase in liver weights and loose feces seen at the lowest observed adverse effect level (LOAEL) of 1,000 mg/kg/day) and a NOAEL of 300 mg/kg/day for developmental toxicity based on increased skeletal variations (increased incidence of all unossified proximal phalanges of the hind limb seen at the LOAEL of 1,000 mg/kg/day).

The cRfD of 0.5 mg/kg/day was established based on the 90–day subchronic toxicity study in dogs, with a NOAEL of 50 mg/kg/day and a safety factor of 100 (10x for interspecies and 10x for intraspecies variations). Since the Food Quality Protection Act (FQPA) safety factor is reduced from 10x to 1x, the chronic population adjusted dose (cPAD) is equal to the cRfD. In the dog study, the NOAEL of 50 mg/kg/day was based on equivocal liver toxicity seen at the LOAEL of 500 mg/kg/day. Therefore, in this dog study, the NOAEL would be between 50–500 mg/kg/day. Since the NOAEL for the subchronic rat studies is 100 mg/kg/day based on kidney and thyroid toxicity, choosing the NOAEL of 50 mg/kg/day would be protective of both the liver effects seen in the dog and the kidney and thyroid effects seen in the rat.

V. Aggregate Exposures

In examining aggregate exposure, section 408 of FFDCA directs EPA to consider available information concerning exposures from the pesticide residue in food and all other non-occupational exposures, including drinking water from ground water or surface water and exposure through pesticide use in gardens, lawns, or buildings (residential and other indoor uses).

EPA establishes exemptions from the requirement of a tolerance only in those cases where it can be clearly demonstrated that the risks from aggregate exposure to pesticide chemical residues under reasonably foreseeable circumstances will pose no appreciable risks to human health. In order to determine the risks from aggregate exposure to pesticide inert ingredients, the Agency considers the toxicity of the inert in conjunction with possible exposure to residues of the inert ingredient through food, drinking water, and through other exposures that occur as a result of pesticide use in residential settings. If EPA is able to determine that a finite tolerance is not necessary to ensure that there is a reasonable certainty that no harm will result from aggregate exposure to the inert ingredient, an exemption from the requirement of a tolerance may be established.

The primary route of exposure to these chemicals from their use as inert ingredients in pesticide products would most likely be through consumption of food to which pesticide products containing them have been applied, and possibly through drinking water (from runoff). Dermal and inhalation exposures are also possible from residential use of pesticide products containing these inert ingredients. However, the quantitative exposure assessment via inhalation and dermal routes of exposure was not performed because negligible inhalation and dermal absorption is expected based on the physicochemical properties of the compounds.

There are no data available on tristyrylphenol ethoxylates residues in food or on non-occupational exposures to tristyrylphenol ethoxylates. In the absence of actual residue data for tristyrylphenol ethoxylates, the Agency performed a dietary (food and drinking water) exposure assessment for tristyrylphenol ethoxylates that included both the existing pre-harvest uses and the proposed post-harvest use on citrus crops in formulations of azoxystrobin and fludioxonil using worst-case assumptions as detailed below. The dietary exposure was calculated as a percentage of the cRfD. The chronic dietary estimate for the U.S. Population was 12.2% (non-nursing infants were the most highly exposed population with a chronic exposure estimate occupying 35.6% of the cPAD). In addition, this exposure assessment assumed that:

- Tristyrylphenol ethoxylates would be used as an inert ingredient in all food use pesticide formulations applied to all crops.
- One hundred percent of all food crops would be treated with pesticides containing tristyrylphenol ethoxylates.
- Tristyrylphenol ethoxylates residues would be present in all crops at levels equal to or exceeding the highest established tolerance levels for any pesticide active ingredient for both the existing preharvest uses and the proposed postharvest use, and
- A conservative default value of 1,000 parts per billion (ppb) for the concentration of an inert ingredient in all sources of drinking water was used. This approach is highly conservative as it is extremely unlikely that tristyrylphenol ethoxylates would have such use as pesticide product inert ingredients and be present in food commodities and drinking water at such high levels. In addition, this highly conservative exposure assessment is protective of any possible non-occupational exposures to tristyrylphenol ethoxylates as it results in exposure estimates orders of magnitude greater than the high-end exposure estimates for residential uses of pesticides routinely used by the Office of Pesticide Programs.

VI. Cumulative Effects

Section 408(b)(2)(D)(v) of FFDCA requires that, when considering whether to establish, modify, or revoke a tolerance, the Agency consider ''available information'' concerning the cumulative effects of a particular pesticide's residues and ''other substances that have a common mechanism of toxicity.'' Unlike other pesticide ingredients for which EPA has followed a cumulative risk approach based on a common mechanism of toxicity, EPA has not made a common mechanism of toxicity finding as to tristyrylphenol ethoxylates and any other substances and tristyrylphenol ethoxylates do not appear to produce a toxic metabolite produced by other substances. For the purposes of this tolerance action, therefore, EPA has not assumed that tristyrylphenol ethoxylates have a common mechanism of toxicity with other substances. For information regarding EPA's efforts to determine which chemicals have a common mechanism of toxicity and to evaluate the cumulative effects of such chemicals, see the policy statements released by EPA's Office of Pesticide Programs concerning common mechanism determinations and procedures for cumulating effects from substances found to have a common mechanism on EPA's website at *http://www.epa.gov/pesticides/cumulative/*.

VII. Additional Safety Factor for the Protection of Infants and Children

Section 408 of the FFDCA provides that EPA shall apply an additional tenfold margin of safety for infants and children in the case of threshold effects to account for prenatal and postnatal toxicity and the completeness of the database on toxicity and exposure unless EPA determines that a different margin of safety will be safe for infants

and children. EPA concluded that the FQPA safety factor could be removed for tristyrylphenol ethoxylates for the following reasons:

1. EPA has sufficient data to assess the toxicity of tristyrylphenol ethoxylates. The data presented in the assessment on the tristyrylphenol ethoxylates are adequate to characterize the expected behavior of the subject chemicals. There are no carcinogenicity studies available on the tristyrylphenol ethoxylates; however, the primary toxicity appears to be to the kidney and thyroid in rats and liver in dogs. The kidney effects in rats appear to be the most sensitive endpoint. The Agency has considerable knowledge of the intratubular mineralization toxic effect to the kidneys and has determined that by preventing the intratubular mineralization in the kidney, tumor formation is unlikely to occur. Since these kidney effects are the most sensitive endpoint, protective measures for kidney toxicity will be protective of any other long term effects. Further, EPA concluded that there is no need for the additional FQPA safety factor for use of subchronic toxicity for long term exposure assessment. The critical effect seen in the subchronic study (intratubular mineralization in the kidney) is believed to occur as a result of precipitation of a chemical based on its physicochemical properties. Precipitation of a chemical based on its physiochemical properties is a function primarily of dose level rather than duration of dosing. Thus, once the threshold for precipitation of the chemical is established (as it was in the subchronic dog study), this threshold level would be considered protective of any short or long term exposure. Therefore, the additional safety factor for the lack of long term studies is not warranted.

2. EPA concluded that there is no evidence of increased susceptibility to infants and children. The developmental toxicity study in which rats were administered (CAS Reg. No. 119432–41–6) resulted in a NOAEL of 300 mg/kg/day for maternal toxicity (based on reduced body weights and increase in liver weights and loose feces seen at the LOAEL of 1,000 mg/kg/day) and a NOAEL of 300 mg/kg/day for developmental toxicity based on increased skeletal variations (increased incidence of all unossified proximal phalanges of the hind limb seen at the LOAEL of 1,000 mg/kg/day). Fetal effects were seen only at the limit dose and in the presence of maternal toxicity.

3. No rabbit developmental study or reproductive toxicity studies are available for these chemicals, however, the developmental toxicity study in rats indicates no robust developmental toxicity at the limit dose and none of the reproductive parameters were affected in the rat developmental study at the limit dose of 1,000 mg/kg/day. This endpoint in the developmental study is considered conservative since the incidence of skeletal variations seen at 1,000 mg/kg/day was marginal.

4. There is no indication in the database that the tristyrylphenol ethoxylates are neurotoxic chemicals and there is no evidence of increased susceptibility. Therefore, there is no need for a developmental neurotoxicity study.

5. There are no residual uncertainties identified in the exposure databases. In the absence of actual exposure data on tristyrylphenol ethoxylates, a highly conservative dietary exposure assessment would not underestimate the risk to infants and children. Based on overall weight of evidence, the FQPA factor of 10X was reduced to 1X.

VIII. Determination of Safety for U.S. Population

Residues of concern are not anticipated for dietary exposure (food and drinking water) or for residential exposure (inhalation and dermal). EPA determines whether pesticide chemical exposures are safe by comparing aggregate exposure estimates to the dose at which no adverse effects were seen in the most sensitive animal studies. In the case of tristyrylphenol ethoxylates, the estimated exposures are compared to a dose level equal to the chronic RfD of 0.5 mg/kg/day (based on the subchronic dog study). Utilizing a highly conservative aggregate exposure assessment, the resulting chronic exposure estimates do not exceed the Agency's level of concern (non-nursing infants were the most highly exposed population with the chronic exposure estimates occupying 35.6% of the cPAD). In addition, this highly conservative exposure assessment is protective of any possible non-occupational exposures to the tristyrylphenol ethoxylates as it results in exposure estimates orders of magnitude greater than the high-end exposure estimates for residential uses of pesticides routinely used by the Office of Pesticides Programs.

Taking into consideration all available information on the tristyrylphenol ethoxylates, it has been determined that there is a reasonable certainty that no harm to any population subgroup, including infants and children, will result from aggregate exposure to these chemicals when used as inert ingredients in post-harvest applications to citrus crops, group 10, at a maximum of 10.0% in pesticide formulations with azoxystrobin and fludioxonil, when considering dietary exposure and all other non-occupational sources of pesticide exposure for which there is reliable information. Therefore, the exemption from the requirement of a tolerance for residues of poly(oxy-1,2-ethanediyl), α-[2,4,6-tris(1-phenylethyl)phenyl]-ω-hydroxy- (CAS Reg. No. 70559–25–0) and poly(oxy-1,2-ethanediyl), α-[tris(1-phenylethyl)phenyl]-ω-hydroxy-, (CAS Reg. No. 99734–09–5), when used as inert ingredients in post-harvest applications to citrus crops, group 10, under 40 CFR 180.1288 at a maximum of 10.0% in pesticide formulations with azoxystrobin and fludioxonil can be considered safe under section 408 of the FFDCA.

IX. Other Considerations

A. Analytical Method

An analytical method is not required for enforcement purposes since the Agency is establishing an exemption from the requirement of a tolerance without any numerical limitation.

B. Existing Exemptions

The tristyrylphenol ethoxylates (CAS Reg. No. 70559–25–0 and CAS Reg. No. 99734–09–5) are exempted from the requirement of a tolerance under 40 CFR 180.920 when used as inert ingredients at not more than 15% in pesticide formulations applied to growing crops only.

C. International Tolerances

The Agency is not aware of any country requiring a tolerance for the tristyrylphenol ethoxylates nor have any CODEX Maximum Residue Levels (MRLs) been established for any food crops at this time.

X. Conclusions

Accordingly, an exemption from the requirement for a tolerance is established for poly(oxy-1,2-ethanediyl), α-[2,4,6-tris(1-phenylethyl)phenyl]-ω-hydroxy- (CAS Reg. No. 70559–25–0) and poly(oxy-1,2-ethanediyl), α-[tris(1-phenylethyl)phenyl]-ω-hydroxy-, (CAS Reg. No. 99734–09–5), when used as inert ingredients in post-harvest applications to citrus crops, group 10, under 40 CFR 180.1288 at a maximum of 10.0% in pesticide formulations with azoxystrobin and fludioxonil.

XI. Statutory and Executive Order Reviews

This final rule establishes a tolerance under section 408(d) of FFDCA in response to a petition submitted to the

Agency. The Office of Management and Budget (OMB) has exempted these types of actions from review under Executive Order 12866, entitled *Regulatory Planning and Review* (58 FR 51735, October 4, 1993). Because this final rule has been exempted from review under Executive Order 12866, this final rule is not subject to Executive Order 13211, entitled *Actions Concerning Regulations That Significantly Affect Energy Supply, Distribution, or Use* (66 FR 28355, May 22, 2001) or Executive Order 13045, entitled *Protection of Children from Environmental Health Risks and Safety Risks* (62 FR 19885, April 23, 1997). This final rule does not contain any information collections subject to OMB approval under the Paperwork Reduction Act (PRA), 44 U.S.C. 3501 *et seq.*, nor does it require any special considerations under Executive Order 12898, entitled *Federal Actions to Address Environmental Justice in Minority Populations and Low-Income Populations* (59 FR 7629, February 16, 1994).

Since tolerances and exemptions that are established on the basis of a petition under section 408(d) of FFDCA, such as the tolerance in this final rule, do not require the issuance of a proposed rule, the requirements of the Regulatory Flexibility Act (RFA) (5 U.S.C. 601 *et seq.*) do not apply.

This final rule directly regulates growers, food processors, food handlers, and food retailers, not States or tribes, nor does this action alter the relationships or distribution of power and responsibilities established by Congress in the preemption provisions of section 408(n)(4) of FFDCA. As such, the Agency has determined that this action will not have a substantial direct effect on States or tribal governments, on the relationship between the national government and the States or tribal governments, or on the distribution of power and responsibilities among the various levels of government or between the Federal Government and Indian tribes. Thus, the Agency has determined that Executive Order 13132, entitled *Federalism* (64 FR 43255, August 10, 1999) and Executive Order 13175, entitled *Consultation and Coordination with Indian Tribal Governments* (65 FR 67249, November 9, 2000) do not apply to this final rule. In addition, this final rule does not impose any enforceable duty or contain any unfunded mandate as described under Title II of the Unfunded Mandates Reform Act of 1995 (UMRA) (Public Law 104–4).

This action does not involve any technical standards that would require Agency consideration of voluntary consensus standards pursuant to section 12(d) of the National Technology Transfer and Advancement Act of 1995 (NTTAA), Public Law 104–113, section 12(d) (15 U.S.C. 272 note).

XII. Congressional Review Act

The Congressional Review Act, 5 U.S.C. 801 *et seq.*, generally provides that before a rule may take effect, the agency promulgating the rule must submit a rule report to each House of the Congress and to the Comptroller General of the United States. EPA will submit a report containing this rule and other required information to the U.S. Senate, the U.S. House of Representatives, and the Comptroller General of the United States prior to publication of this final rule in the **Federal Register**. This final rule is not a ''major rule'' as defined by 5 U.S.C. 804(2).

List of Subjects in 40 CFR Part 180

Environmental protection, Administrative practice and procedure, Agricultural commodities, Pesticides and pests, Reporting and recordkeeping requirements.

Dated: March 4, 2009.

Lois Rossi,

Director, Registration Division, Office of Pesticide Programs.

■ Therefore, 40 CFR chapter I is amended as follows:

PART 180—[AMENDED]

■ 1. The authority citation for part 180 continues to read as follows:

Authority: 21 U.S.C. 321(q), 346a and 371.

■ 2. Section 180.1288 is added to read as follows:

§ 180.1288 Tristyrylphenol ethoxylates; exemption from the requirement of a tolerance.

An exemption from the requirement of a tolerance is established for residues of poly(oxy-1,2-ethanediyl), α-[2,4,6-tris(1-phenylethyl)phenyl]-ω-hydroxy-, (CAS Reg. No. 70559–25–0) and poly(oxy-1,2-ethanediyl), α-[tris(1-phenylethyl)phenyl]-ω-hydroxy-, (CAS Reg. No. 99734–09–5) on citrus crops, group 10, when used as inert ingredients under the following conditions:

(a) They are applied post-harvest;

(b) They are used as inert ingredients in pesticide formulations with azoxystrobin and fludioxonil; and

(c) They constitute no more than 10.0% of the formulated pesticide product.

[FR Doc. E9–6259 Filed 3–24–09; 8:45 am]

BILLING CODE 6560–50–S

ENVIRONMENTAL PROTECTION AGENCY

40 CFR Part 271

[EPA–R06–RCRA–2008–0756–; FRL–8784–9]

New Mexico: Final Authorization of State Hazardous Waste Management Program Revision

AGENCY: Environmental Protection Agency (EPA).

ACTION: Immediate final rule.

SUMMARY: The State of New Mexico has applied to the EPA for final authorization to administer the provisions of the Used Oil program under the Resource Conservation and Recovery Act (RCRA). The EPA has determined that the statutes and regulations of the State of New Mexico Used Oil program satisfy all requirements needed to qualify for final authorization, and is authorizing the State's changes through this immediate final action. The EPA is publishing this rule to authorize the changes without a prior proposal because we believe this action is not controversial and do not expect comments that oppose it. Unless we receive written comments which oppose this authorization during the comment period, the decision to authorize New Mexico's changes to its hazardous waste program will take effect. If we receive comments that oppose this action, we will publish a document in the **Federal Register** withdrawing this rule before it takes effect, and a separate document in the proposed rules section of this **Federal Register** will serve as a proposal to authorize the changes.

DATES: This final authorization will become effective on May 26, 2009 unless the EPA receives adverse written comment by April 24, 2009. If the EPA receives such comment, it will publish a timely withdrawal of this immediate final rule in the **Federal Register** and inform the public that this authorization will not take effect.

ADDRESSES: Submit your comments by one of the following methods:

1. *Federal eRulemaking Portal: http://www.regulations.gov.* Follow the on-line instructions for submitting comments.

2. *E-mail: patterson.alima@epa.gov.*

3. *Mail:* Alima Patterson, Region 6, Regional Authorization Coordinator, State/Tribal Oversight Section (6PD–O), Multimedia Planning and Permitting Division, EPA Region 6, 1445 Ross Avenue, Dallas, Texas 75202–2733.

4. *Hand Delivery or Courier.* Deliver your comments to Alima Patterson,

Region 6, Regional Authorization Coordinator, State/Tribal Oversight Section (6PD–O), Multimedia Planning and Permitting Division, EPA Region 6, 1445 Ross Avenue, Dallas, Texas 75202–2733.

Instructions: Do not submit information that you consider to be CBI or otherwise protected through *regulations.gov*, or e-mail. The Federal *regulations.gov* Web site is an ''anonymous access'' system, which means the EPA will not know your identity or contact information unless you provide it in the body of your comment. If you send an e-mail comment directly to the EPA without going through *regulations.gov*, your e-mail address will be automatically captured and included as part of the comment that is placed in the public docket and made available on the Internet. If you submit an electronic comment, the EPA recommends that you include your name and other contact information in the body of your comment and with any disk or CD–ROM you submit. If the EPA cannot read your comment due to technical difficulties and cannot contact you for clarification, the EPA may not be able to consider your comment. Electronic files should avoid the use of special characters, any form of encryption, and be free of any defects or viruses. You can view and copy New Mexico's application and associated publicly available materials from 8:30 a.m. to 4 p.m. Monday through Friday at the following locations: New Mexico Environment Department, 2905 Rodeo Park Drive East, Building 1, Santa Fe, New Mexico 87505–6303, phone number (505) 476–6035 and EPA, Region 6, 1445 Ross Avenue, Dallas, Texas 75202–2733, phone number (214) 665–8533. Interested persons wanting to examine these documents should make an appointment with the office at least two weeks in advance.

FOR FURTHER INFORMATION CONTACT: Alima Patterson, Region 6 Regional Authorization Coordinator, State/Tribal Oversight Section (6PD–O), Multimedia Planning and Permitting Division, (214) 665–8533), EPA Region 1445 Ross Avenue, Dallas, Texas 75202–2733, and E-mail address *patterson.alima@epa.gov.*

SUPPLEMENTARY INFORMATION:

A. Why Are Revisions to State Programs Necessary?

States which have received final authorization from the EPA under RCRA section 3006(b), 42 U.S.C. 6926(b), must maintain a hazardous waste program that is equivalent to, consistent with, and no less stringent than the Federal program. As the Federal program changes, States must change their programs and ask the EPA to authorize the changes. Changes to State programs may be necessary when Federal or State statutory or regulatory authority is modified or when certain other changes occur. Most commonly, States must change their programs because of changes to the EPA's regulations in 40 Code of Federal Regulations (CFR) parts 124, 260 through 266, 268, 270, 273, and 279.

B. What Decisions Have We Made in This Rule?

We conclude that New Mexico's application to revise its authorized program meets all of the statutory and regulatory requirements established by RCRA. Therefore, we grant New Mexico final authorization to operate its hazardous waste program with the changes described in the authorization application. New Mexico has responsibility for permitting treatment, storage, and disposal facilities within its borders (except in Indian Country) and for carrying out the aspects of the RCRA program described in its revised program application, subject to the limitations of the Hazardous and Solid Waste Amendments of 1984 (HSWA). New Federal requirements and prohibitions imposed by Federal regulations that the EPA promulgates under the authority of HSWA take effect in authorized States before they are authorized for the requirements. Thus, the EPA will implement those requirements and prohibitions in New Mexico including issuing permits, until the State is granted authorization to do so.

C. What Is the Effect of Today's Authorization Decision?

The effect of this decision is that a facility in New Mexico subject to RCRA will now have to comply with the authorized State requirements instead of the equivalent Federal requirements in order to comply with RCRA. New Mexico has enforcement responsibilities under its State hazardous waste program for violations of such program, but the EPA retains its authority under RCRA sections 3007, 3008, 3013, and 7003, which include, among others, authority to:

—Do inspections, and require monitoring, tests, analyses, or reports;
—Enforce RCRA requirements and suspend or revoke permits; and
—Take enforcement actions after notice to and consultation with the State.

This action does not impose additional requirements on the regulated community because the regulations for which New Mexico is being authorized by today's action are already effective under State law, and are not changed by today's action.

D. Why Wasn't There a Proposed Rule Before Today's Rule?

The EPA did not publish a proposal before today's rule because we view this as a routine program change and do not expect comments that oppose this approval. We are providing an opportunity for public comment now. In addition to this rule, in the proposed rules section of today's **Federal Register** we are publishing a separate document that proposes to authorize the State program changes.

E. What Happens if the EPA Receives Comments That Oppose This Action?

If the EPA receives comments that oppose this authorization, we will withdraw this rule by publishing a document in the **Federal Register** before the rule becomes effective. The EPA will base any further decision on the authorization of the State program changes on the proposal mentioned in the previous paragraph. We will then address all public comments in a later final rule. You may not have another opportunity to comment. If you want to comment on this authorization, you must do so at this time. If we receive comments that oppose only the authorization of a particular change to the State hazardous waste program, we will withdraw only that part of this rule, but the authorization of the program changes that the comments do not oppose will become effective on the date specified above. The **Federal Register** withdrawal document will specify which part of the authorization will become effective, and which part is being withdrawn.

F. For What Has New Mexico Previously Been Authorized?

The State of New Mexico initially received final authorization on January 25, 1985, (50 FR 1515) to implement its base hazardous waste management program. New Mexico received authorization for revisions to its program on February 9, 1990 (55 FR 4604) effective April 10, 1990; March 19, 1990 (55 FR 10076); July 11, 1990 (55 FR 28397) effective July 25, 1990; October 5, 1992 (57 FR 45717) effective December 4, 1992; June 9, 1994 (59 FR 29734) effective August 23, 1994; October 7, 1994 (59 FR 51122) effective December 21, 1994; April 25, 1995 (60 FR 20238) effective July 10, 1995; (61 FR 2450) January 2, 1996; December 23, 1996 (61 FR 67474) effective March 10,

1997 and August 10, 2001 (66 FR 42140) effective October 9, 2001. The authorized New Mexico RCRA program was incorporated by reference to the CFR, effective December 13, 1993 (58 FR 52677); November 18, 1996 (61 FR 49265); July 13, 1998 (63 FR 23221); effective October 27, 2003 and (72 FR 46165) effective October 16, 2007. On August 22, 2008, New Mexico applied for approval of its program revisions for the Used Oil provisions which includes Rule Checklists 104, 107, 112, 122, 122.1, 130, 166, and 166.1 listed in this document in accordance with 40 CFR 271.21.

The NMED petitioned the New Mexico Environmental Improvement Board (EIB) on March 10, 2003 for a hearing to amend the HWMR, 20.4.1 for the EPA Federal rules promulgated through July 1, 2002, including the Used Oil program. The EIB adopted the amendments to Hazardous Waste Management Regulations (HWMR) on August 5, 2003 as permanent rules which included the Used Oil program.

Thus, 20.4.1 NMAC provides equivalent and no less stringent authority than the adoption of Federal RCRA Subtitle C program in effect through July 1, 2002. This is the version that is referred to in the Attorney General's Statement and Certification for submitted with this program revision. The 20 NMAC 4.1 became effective on October 1, 2003. New Mexico Statutes Annotated (NMAC) 1978 Sections 74–4–4A(1) and 74–4–4F (2002) provides New Mexico with authority to adopt Federal regulations by reference with exceptions to federal rules that are not delegated to the State of New Mexico. Since the latest authorization the scope, structure, coverage, and processes have not materially changed. The Used Oil program has been adopted within the Hazardous Waste Management Program, New Mexico does now have the statutory authority for criminal penalties as required by EPA for program authorization. Therefore, we are authorizing the State of New Mexico for the Used Oil regulations in this **Federal Register** document.

New Mexico, through the HWMR, has incorporated by reference the following federal RCRA regulations as amended through July 1, 2002: 40 CFR parts 260–270, 40 CFR Part 270; 40 CFR Part 273; and 40 CFR Part 279 with the exception of 40 CFR 260.1(b)(6), 260.20, 260.22, 260.30, 260.31, 260.32, 260.33, 263.20(e), 264.1(f), 264.149, 264.150, 264.301(l), 264.1030(d), 264.1050(g), 264.1080(e), 264.1080(f), 264.1080(g), 265.1(c)(4), 265.149, 265.150, 265.1030(c), 265.1050(f), 265.1080(e), 265.1080(f), 265.1080(g); 268.5, 268.6, 268.42(b), 268.44(a) through (g). New Mexico has incorporated by reference 40 CFR Part 124, §§ 124.31, 124.32, and 124.33 with exception to 40 CFR parts 124.1 and 124.2. Also, it has adopted regulations at 20.4.1.901 NMAC, Permitting Procedures, that are equivalent to and no less stringent than the procedures of 40 CFR part 124 and required by 40 CFR Part 271.14.

G. What Changes Are We Authorizing With Today's Action?

On August 22, 2008, New Mexico submitted a final complete program revision application, seeking authorization of their changes in accordance with 40 CFR 271.21. We now make an immediate final decision, subject to receipt of written comments that oppose this action, that New Mexico's hazardous waste program revision satisfies all of the requirements necessary to qualify for Final authorization. Therefore, we grant the State of New Mexico Final authorization for the following changes: The State of New Mexico's program revisions consist of regulations which specifically govern Checklists 112, 122, 122.1, 130, 166, and 166.1 are documented in this **Federal Register** document.

Description of federal requirement (include checklist #, if relevant)	**Federal Register** date and page (and/or RCRA statutory authority)	Analogous state authority
1. Recycled Used Oil Management Standards. (Checklist 112).	57 FR 41566–41626 September 10, 1992	New Mexico Statute Annotated (NMSA) 1978, Sections 74–4–4A(1) and 74–4–4F (2002). Hazardous Waste Regulations (HWMR), New Mexico Environmental Improvement Board, 20 NMAC, 20.4.1. 100, 20.4.1.200, 20.4.1.700 and 20.4.1.1002, as adopted August 5, 2003, effective October 1, 2003.
2. Recycled Used Oil Management Standards; Technical Amendments and Corrections 1. (Checklist 122).	58 FR 26420–26426 May 3, 1993	New Mexico Statute Annotated (NMSA) 1978, Sections 74–4–4A(1) and 74–4–4F (2002). Hazardous Waste Regulations (HWMR), New Mexico Environmental Improvement Board, 20 NMAC, 20.4.1. 200, 20.4.1.500, 20.4.1.600, and 20.4.1.1002 as adopted August 5, 2003, effective October 1, 2003.
3. Recycled Used Oil Management Standards; Technical Amendments and Corrections II. (Checklist 130).	59 FR 10550–10560 March 4, 1994	New Mexico Statute Annotated (NMSA) 1978, Sections 74–4–4A(1) and 74–4–4F (2002). Hazardous Waste Regulations (HWMR), New Mexico Environmental Improvement Board, 20 NMAC, 20.4.1. 1002, as adopted August 5, 2003, effective October 1, 2003.
4. Recycled Used Oil Management Standards; Technical Correction and Clarification. (Checklist 166 & 166.1).	63 FR 24963–24969 May 6, 1998; as amended July 14, 1998, at 63 FR 37780–37782.	New Mexico Statute Annotated (NMSA) 1978, Sections 74–4–4A(1) and 74–4–4F (2002). Hazardous Waste Regulations (HWMR), New Mexico Environmental Improvement Board, 20 NMAC, 20.4.1.200 and 20.4.1.1002, adopted August 5, 2003, effective October 1, 2003.

H. Where Are the Revised State Rules Different From the Federal Rules?

In this authorization of the State of New Mexico's program revisions for the Used Oil provisions, there are no provisions that are more stringent or broader in scope.

I. Who Handles Permits After the Authorization Takes Effect?

New Mexico will issue permits for all the provisions for which it is authorized and will administer the permits it issues. The EPA will continue to administer any RCRA hazardous waste permits or portions of permits which we issued prior to the effective date of this authorization. We will not issue any more new permits or new portions of permits for the provisions listed in the Table in this document after the effective date of this authorization. The EPA will continue to implement and issue permits for HSWA requirements for which New Mexico is not yet authorized.

J. What Is Codification and Is the EPA Codifying New Mexico's Hazardous Waste Program as Authorized in This Rule?

Codification is the process of placing the State's statutes and regulations that comprise the State's authorized hazardous waste program into the CFR. We do this by referencing the authorized State rules in 40 CFR part 272. We reserve the amendment of 40 CFR part 272, subpart T for this authorization of New Mexico's program changes until a later date. In this authorization application the EPA is not codifying the rules documented in this **Federal Register** notice.

K. Statutory and Executive Order Reviews

The Office of Management and Budget (OMB) has exempted this action from the requirements of Executive Order 12866 (58 FR 51735, October 4, 1993), and therefore this action is not subject to review by OMB. This action authorizes State requirements for the purpose of RCRA 3006 and imposes no additional requirements beyond those imposed by State law. Accordingly, I certify that this action will not have a significant economic impact on a substantial number of small entities under the Regulatory Flexibility Act (5 U.S.C. 601 *et seq.*). Because this action authorizes preexisting requirements under State law and does not impose any additional enforceable duty beyond that required by State law, it does not contain any unfunded mandate or significantly or uniquely affect small governments, as described in the Unfunded Mandates Reform Act of 1995 (Pub. L. 104–4). For the same reason, this action also does not significantly or uniquely affect the communities of Tribal governments, as specified by Executive Order 13175 (65 FR 67249, November 9, 2000). This action will not have substantial direct effects on the States, on the relationship between the national government and the States, or on the distribution of power and responsibilities among the various levels of government, as specified in Executive Order 13132 (64 FR 43255, August 10, 1999), because it merely authorizes State requirements as part of the State RCRA hazardous waste program without altering the relationship or the distribution of power and responsibilities established by RCRA. This action also is not subject to Executive Order 13045 (62 FR 19885, April 23, 1997), because it is not economically significant and it does not make decisions based on environmental health or safety risks. This rule is not subject to Executive Order 13211, ''Actions Concerning Regulations That Significantly Affect Energy Supply, Distribution, or Use'' (66 FR 28355 (May 22, 2001)) because it is not a significant regulatory action under Executive Order 12866.

Under RCRA 3006(b), the EPA grants a State's application for authorization as long as the State meets the criteria required by RCRA. It would thus be inconsistent with applicable law for the EPA, when it reviews a State authorization application, to require the use of any particular voluntary consensus standard in place of another standard that otherwise satisfies the requirements of RCRA. Thus, the requirements of section 12(d) of the National Technology Transfer and Advancement Act of 1995 (15 U.S.C. 272 note) do not apply. As required by section 3 of Executive Order 12988 (61 FR 4729, February 7, 1996), in issuing this rule, the EPA has taken the necessary steps to eliminate drafting errors and ambiguity, minimize potential litigation, and provide a clear legal standard for affected conduct. The EPA has complied with Executive Order 12630 (53 FR 8859, March 15,1988) by examining the takings implications of the rule in accordance with the ''Attorney General's Supplemental Guidelines for the Evaluation of Risk and Avoidance of Unanticipated Takings'' issued under the Executive Order. This rule does not impose an information collection burden under the provisions of the Paperwork Reduction Act of 1995 (44 U.S.C. 3501 *et seq.*). The Congressional Review Act, 5 U.S.C. 801 *et seq.*, as added by the Small Business Regulatory Enforcement Fairness Act of 1996, generally provides that before a rule may take effect, the agency promulgating the rule a rule must submit report, which includes a copy of the rule, to each House of the Congress and to the Comptroller General of the United States. The EPA will submit a report containing this document and other required information to the U.S. Senate, the U.S. House of Representatives, and the Comptroller General of the United States prior to publication in the **Federal Register**. A major rule cannot take effect until 60 days after it is published in the **Federal Register**. This action is not a ''major rule'' as defined by 5 U.S.C. 804(2). This action will be effective May 26, 2009.

List of Subjects in 40 CFR Part 271

Environmental protection, Administrative practice and procedure, Confidential business information, Hazardous waste, Hazardous waste transportation, Indian lands, Intergovernmental relations, Penalties, Reporting and recordkeeping requirements.

Authority: This action is issued under the authority of sections 2002(a), 3006, and 7004(b) of the Solid Waste Disposal Act as amended 42 U.S.C. 6912(a), 6926, 6974(b).

Dated: March 5, 2009.

Lawrence E. Starfield,

Acting Regional Administrator, Region 6.

[FR Doc. E9–6677 Filed 3–24–09; 8:45 am]

BILLING CODE 6560–50–P

DEPARTMENT OF HOMELAND SECURITY

Federal Emergency Management Agency

44 CFR Part 64

[Docket ID FEMA–2008–0020; Internal Agency Docket No. FEMA–8067]

Suspension of Community Eligibility

AGENCY: Federal Emergency Management Agency, DHS.

ACTION: Final rule.

SUMMARY: This rule identifies communities, where the sale of flood insurance has been authorized under the National Flood Insurance Program (NFIP), that are scheduled for suspension on the effective dates listed within this rule because of noncompliance with the floodplain management requirements of the program. If the Federal Emergency Management Agency (FEMA) receives

documentation that the community has adopted the required floodplain management measures prior to the effective suspension date given in this rule, the suspension will not occur and a notice of this will be provided by publication in the **Federal Register** on a subsequent date.

DATES: *Effective Dates:* The effective date of each community's scheduled suspension is the third date (''Susp.'') listed in the third column of the following tables.

FOR FURTHER INFORMATION CONTACT: If you want to determine whether a particular community was suspended on the suspension date or for further information, contact David Stearrett, Mitigation Directorate, Federal Emergency Management Agency, 500 C Street, SW., Washington, DC 20472, (202) 646–2953.

SUPPLEMENTARY INFORMATION: The NFIP enables property owners to purchase flood insurance which is generally not otherwise available. In return, communities agree to adopt and administer local floodplain management aimed at protecting lives and new construction from future flooding. Section 1315 of the National Flood Insurance Act of 1968, as amended, 42 U.S.C. 4022, prohibits flood insurance coverage as authorized under the NFIP, 42 U.S.C. 4001 *et seq.*; unless an appropriate public body adopts adequate floodplain management measures with effective enforcement measures. The communities listed in this document no longer meet that statutory requirement for compliance with program regulations, 44 CFR part 59. Accordingly, the communities will be suspended on the effective date in the third column. As of that date, flood insurance will no longer be available in the community. However, some of these communities may adopt and submit the required documentation of legally enforceable floodplain management measures after this rule is published but prior to the actual suspension date. These communities will not be suspended and will continue their eligibility for the sale of insurance. A notice withdrawing the suspension of the communities will be published in the **Federal Register**.

In addition, FEMA has identified the Special Flood Hazard Areas (SFHAs) in these communities by publishing a Flood Insurance Rate Map (FIRM). The date of the FIRM, if one has been published, is indicated in the fourth column of the table. No direct Federal financial assistance (except assistance pursuant to the Robert T. Stafford Disaster Relief and Emergency Assistance Act not in connection with a flood) may legally be provided for construction or acquisition of buildings in identified SFHAs for communities not participating in the NFIP and identified for more than a year, on FEMA's initial flood insurance map of the community as having flood-prone areas (section 202(a) of the Flood Disaster Protection Act of 1973, 42 U.S.C. 4106(a), as amended). This prohibition against certain types of Federal assistance becomes effective for the communities listed on the date shown in the last column. The Administrator finds that notice and public comment under 5 U.S.C. 553(b) are impracticable and unnecessary because communities listed in this final rule have been adequately notified.

Each community receives 6-month, 90-day, and 30-day notification letters addressed to the Chief Executive Officer stating that the community will be suspended unless the required floodplain management measures are met prior to the effective suspension date. Since these notifications were made, this final rule may take effect within less than 30 days.

National Environmental Policy Act. This rule is categorically excluded from the requirements of 44 CFR part 10, Environmental Considerations. No environmental impact assessment has been prepared.

Regulatory Flexibility Act. The Administrator has determined that this rule is exempt from the requirements of the Regulatory Flexibility Act because the National Flood Insurance Act of 1968, as amended, 42 U.S.C. 4022, prohibits flood insurance coverage unless an appropriate public body adopts adequate floodplain management measures with effective enforcement measures. The communities listed no longer comply with the statutory requirements, and after the effective date, flood insurance will no longer be available in the communities unless remedial action takes place.

Regulatory Classification. This final rule is not a significant regulatory action under the criteria of section 3(f) of Executive Order 12866 of September 30, 1993, Regulatory Planning and Review, 58 FR 51735.

Executive Order 13132, Federalism. This rule involves no policies that have federalism implications under Executive Order 13132.

Executive Order 12988, Civil Justice Reform. This rule meets the applicable standards of Executive Order 12988.

Paperwork Reduction Act. This rule does not involve any collection of information for purposes of the Paperwork Reduction Act, 44 U.S.C. 3501 *et seq.*

List of Subjects in 44 CFR Part 64

Flood insurance, Floodplains.

■ Accordingly, 44 CFR part 64 is amended as follows:

PART 64—[AMENDED]

■ 1. The authority citation for part 64 continues to read as follows:

Authority: 42 U.S.C. 4001 *et seq.*; Reorganization Plan No. 3 of 1978, 3 CFR, 1978 Comp.; p. 329; E.O. 12127, 44 FR 19367, 3 CFR, 1979 Comp.; p. 376.

§ 64.6 [Amended]

■ 2. The tables published under the authority of § 64.6 are amended as follows:

State and location	Community No.	Effective date authorization/cancellation of sale of flood insurance in community	Current effective map date	Date certain Federal assistance no longer available in SFHAs
Region III				
Pennsylvania:				
Camp Hill, Borough of, Cumberland County.	420357	October 20, 1972, Emerg; March 15, 1977, Reg; Date of publication in the **Federal Register**, Susp.	03/16/2009	Date of publication in the **Federal Register**.
Carlisle, Borough of, Cumberland County.	425382	May 14, 1971, Emerg; September 1, 1972, Reg; Date of publication in the **Federal Register**, Susp.	.....*do	Do.

State and location	Community No.	Effective date authorization/cancellation of sale of flood insurance in community	Current effective map date	Date certain Federal assistance no longer available in SFHAs
Dickinson, Township of, Cumberland County.	421580	November 20, 1975, Emerg; April 20, 1979, Reg; Date of publication in the **Federal Register**, Susp.	.....*do	Do.
East Pennsboro, Township of, Cumberland County.	420359	December 3, 1971, Emerg; April 15, 1977, Reg; Date of publication in the **Federal Register**, Susp.	.....do	Do.
Hampden, Township of, Cumberland County.	420360	April 14, 1972, Emerg; February 15, 1978, Reg; Date of publication in the **Federal Register**, Susp.	.....do	Do.
Hopewell, Township of, Cumberland County.	421581	September 8, 1982, Emerg; June 1, 1989, Reg; Date of publication in the **Federal Register**, Susp.	.....do	Do.
Lemoyne, Borough of, Cumberland County.	420361	May 22, 1973, Emerg; December 4, 1979, Reg; Date of publication in the **Federal Register**, Susp.	.....do	Do.
Lower Allen, Township of, Cumberland County.	421016	June 23, 1972, Emerg; September 30, 1977, Reg; Date of publication in the **Federal Register**, Susp.	.....do	Do.
Lower Frankford, Township of, Cumberland County.	421018	January 16, 1974, Emerg; March 16, 1988, Reg; Date of publication in the **Federal Register**, Susp.	.....do	Do.
Lower Mifflin, Township of, Cumberland County.	421582	May 23, 1977, Emerg; October 8, 1982, Reg; Date of publication in the **Federal Register**, Susp.	.....do	Do.
Mechanicsburg, Borough of, Cumberland County.	420362	October 15, 1971, Emerg; January 16, 1980, Reg; Date of publication in the **Federal Register**, Susp.	.....do	Do.
Middlesex, Township of, Cumberland County.	420363	January 26, 1973, Emerg; June 15, 1981, Reg; Date of publication in the **Federal Register**, Susp.	.....do	Do.
Monroe, Township of, Cumberland County.	420364	February 25, 1972, Emerg; December 4, 1979, Reg; Date of publication in the **Federal Register**, Susp.	.....do	Do.
Mount Holly Springs, Borough of, Cumberland County.	420365	February 25, 1972, Emerg; March 18, 1980, Reg; Date of publication in the **Federal Register**, Susp.	.....do	Do.
New Cumberland, Borough of, Cumberland County.	420366	November 5, 1971, Emerg; February 16, 1977, Reg; Date of publication in the **Federal Register**, Susp.	.....do	Do.
Newburg, Borough of, Cumberland County.	422405	March 10, 1976, Emerg; June 24, 1977, Reg; Date of publication in the **Federal Register**, Susp.	.....do	Do.
Newville, Borough of, Cumberland County.	421579	September 21, 1976, Emerg; December 14, 1979, Reg; Date of publication in the **Federal Register**, Susp.	.....do	Do.
North Middleton, Township of, Cumberland County.	420367	January 12, 1973, Emerg; April 1, 1982, Reg; Date of publication in the **Federal Register**, Susp.	.....do	Do.
North Newton, Township of, Cumberland County.	421583	February 6, 1976, Emerg; September 10, 1984, Reg; Date of publication in the **Federal Register**, Susp.	.....do	Do.
Penn, Township of, Cumberland County	421584	November 25, 1975, Emerg; October 15, 1985, Reg; Date of publication in the **Federal Register**, Susp.	.....do	Do.
Shippensburg, Borough of, Cumberland County.	420368	January 23, 1974, Emerg; March 15, 1979, Reg; Date of publication in the **Federal Register**, Susp.	.....do	Do.
Shippensburg, Township of, Cumberland County.	421585	January 13, 1981, Emerg; November 4, 1988, Reg; Date of publication in the **Federal Register**, Susp.	.....do	Do.
Shiremanstown, Borough of, Cumberland County.	420369	March 2, 1973, Emerg; January 5, 1979, Reg; Date of publication in the **Federal Register**, Susp.	.....do	Do.
Silver Spring, Township of, Cumberland County.	420370	March 2, 1973, Emerg; May 2, 1983, Reg; Date of publication in the **Federal Register**, Susp.	.....do	Do.
South Middleton, Township of, Cumberland County.	420371	April 19, 1973, Emerg; November 4, 1981, Reg; Date of publication in the **Federal Register**, Susp.	.....do	Do.

State and location	Community No.	Effective date authorization/cancellation of sale of flood insurance in community	Current effective map date	Date certain Federal assistance no longer available in SFHAs
South Newton, Township of, Cumberland County.	421586	April 25, 1977, Emerg; August 4, 1988, Reg; Date of publication in the **Federal Register**, Susp.	.....do	Do.
Southampton, Township of, Cumberland County.	421587	February 1, 1977, Emerg; August 4, 1988, Reg; Date of publication in the **Federal Register**, Susp.	.....do	Do.
Upper Allen, Township of, Cumberland County.	420372	December 10, 1971, Emerg; February 15, 1980, Reg; Date of publication in the **Federal Register**, Susp.	.....do	Do.
Upper Frankford, Township of, Cumberland County.	421588	August 22, 1975, Emerg; April 5, 1988, Reg; Date of publication in the **Federal Register**, Susp.	.....do	Do.
Upper Mifflin, Township of, Cumberland County.	421589	February 4, 1976, Emerg; November 26, 1982, Reg; Date of publication in the **Federal Register**, Susp.	.....do	Do.
West Pennsboro, Township of, Cumberland County.	421590	January 14, 1976, Emerg; March 4, 1988, Reg; Date of publication in the **Federal Register**, Susp.	.....do	Do.
Wormleysburg, Borough of, Cumberland County.	420374	August 18, 1972, Emerg; February 16, 1977, Reg; Date of publication in the **Federal Register**, Susp.	.....do	Do.
Virginia:				
Accomack County, Unincorporated Areas.	510001	January 10, 1974, Emerg; June 1, 1984, Reg; Date of publication in the **Federal Register**, Susp.	.....do	Do.
Belle Haven, Town of, Accomack County.	510242	Emerg; February 8, 2001, Reg; Date of publication in the **Federal Register**, Susp.	.....do	Do.
Charles City County, Unincorporated Areas.	510198	October 20, 1975, Emerg; September 5, 1990, Reg; Date of publication in the **Federal Register**, Susp.	.....do	Do.
Chincoteague, Town of, Accomack County.	510002	March 4, 1974, Emerg; March 1, 1977, Reg; Date of publication in the **Federal Register**, Susp.	.....do	Do.
Essex County, Unincorporated Areas ...	510048	March 15, 1974, Emerg; December 16, 1988, Reg; Date of publication in the **Federal Register**, Susp.	.....do	Do.
King George County, Unincorporated Areas.	510312	May 16, 1975, Emerg; December 15, 1990, Reg; Date of publication in the **Federal Register**, Susp.	.....do	Do.
Onancock, Town of, Accomack County	510298	February 17, 1976, Emerg; December 15, 1981, Reg; Date of publication in the **Federal Register**, Susp.	.....do	Do.
Saxis, Town of, Accomack County	510003	March 11, 1976, Emerg; November 17, 1982, Reg; Date of publication in the **Federal Register**, Susp.	.....do	Do.
Tangier, Town of, Accomack County	510004	March 28, 1975, Emerg; October 15, 1982, Reg; Date of publication in the **Federal Register**, Susp.	.....do	Do.
Tappahanock, Town of, Essex County	510049	June 3, 1974, Emerg; August 4, 1987, Reg; Date of publication in the **Federal Register**, Susp.	.....do	Do.
Wachapreague, Town of, Accomack County.	510005	January 28, 1975, Emerg; September 2, 1982, Reg; Date of publication in the **Federal Register**, Susp.	.....do	Do.
Region IV				
Alabama:				
Chilton County, Unincorporated Areas ..	010030	Emerg; February 7, 2006, Reg; Date of publication in the **Federal Register**, Susp.	.....do	Do.
Clanton, City of, Chilton County	010031	August 7, 1975, Emerg; May 1, 1984, Reg; Date of publication in the **Federal Register**, Susp.	.....do	Do.
Maplesville, Town of, Chilton County	010032	September 16, 1975, Emerg; February 1, 1984, Reg; Date of publication in the **Federal Register**, Susp.	.....do	Do.
Thorsby, Town of, Chilton County	010344	Emerg; November 28, 1997, Reg; Date of publication in the **Federal Register**, Susp.	.....do	Do.
Georgia:				

State and location	Community No.	Effective date authorization/cancellation of sale of flood insurance in community	Current effective map date	Date certain Federal assistance no longer available in SFHAs
Darien, City of, McIntosh County	130131	April 24, 1975, Emerg; July 2, 1981, Reg; Date of publication in the **Federal Register**, Susp.	.....do	Do.
McIntosh County, Unincorporated Areas	130130	December 16, 1975, Emerg; May 15, 1984, Reg; Date of publication in the **Federal Register**, Susp.	.....do	Do.
Kentucky: Booneville, City of, Owsley County.	210187	July 24, 1984, Emerg; August 5, 1985, Reg; Date of publication in the **Federal Register**, Susp.	.....do	Do.
Mississippi:				
Gautier, City of, Jackson County	280332	November 13, 1986, Emerg; November 13, 1986, Reg; Date of publication in the **Federal Register**, Susp.	.....do	Do.
Jackson County, Unincorporated Areas	285256	June 30, 1970, Emerg; April 3, 1978, Reg; Date of publication in the **Federal Register**, Susp.	.....do	Do.
Moss Point, City of, Jackson County	285258	September 11, 1970, Emerg; September 18, 1970, Reg; Date of publication in the **Federal Register**, Susp.	.....do	Do.
Ocean Springs, City of, Jackson County	285259	August 14, 1970, Emerg; September 18, 1970, Reg; Date of publication in the **Federal Register**, Susp.	.....do	Do.
Pascagoula, City of, Jackson County	285260	July 17, 1970, Emerg; September 18, 1970, Reg; Date of publication in the **Federal Register**, Susp.	.....do	Do.
North Carolina:				
Clemmons, Village of, Forsyth County	370531	Emerg;—June 27, 2000, Reg; Date of publication in the **Federal Register**, Susp.	.....do	Do.
Davidson County, Unincorporated Areas.	370307	July 23, 1976, Emerg; May 1, 1980, Reg; Date of publication in the **Federal Register**, Susp.	.....do	Do.
Davie County, Unincorporated Areas	370308	December 23, 1975, Emerg; March 21, 1980, Reg; Date of publication in the **Federal Register**, Susp.	.....do	Do.
Forsyth County, Unincorporated Areas	375349	March 19, 1971, Emerg; September 1, 1972, Reg; Date of publication in the **Federal Register**, Susp.	.....do	Do.
High Point, City of, Guilford County	370113	August 5, 1974, Emerg; November 1, 1979, Reg; Date of publication in the **Federal Register**, Susp.	.....do	Do.
Lexington, City of, Davidson County	370081	July 10, 1975, Emerg; November 1, 1979, Reg; Date of publication in the **Federal Register**, Susp.	.....do	Do.
Thomasville, City of, Davidson County	370082	December 3, 1974, Emerg; September 28, 1979, Reg; Date of publication in the **Federal Register**, Susp.	.....do	Do.
Winston-Salem, City of, Forsyth County	375360	March 19, 1971, Emerg; August 31, 1973, Reg; Date of publication in the **Federal Register**, Susp.	.....do	Do.
Region V				
Wisconsin:				
Baldwin, Village of, St. Croix County	550380	June 26, 1975, Emerg; August 15, 1990, Reg; Date of publication in the **Federal Register**, Susp.	.....do	Do.
Glenwood City, City of, St. Croix County.	550381	July 1, 1975, Emerg; September 4, 1986, Reg; Date of publication in the **Federal Register**, Susp.	.....do	Do.
Hammond, Village of, St. Croix County	550382	October 23, 1975, Emerg; July 16, 1987, Reg; Date of publication in the **Federal Register**, Susp.	.....do	Do.
Hudson, City of, St. Croix County	555558	April 23, 1971, Emerg; November 10, 1972, Reg; Date of publication in the **Federal Register**, Susp.	.....do	Do.
New Richmond, City of, St. Croix County.	550384	June 5, 1974, Emerg; July 16, 2004, Reg; Date of publication in the **Federal Register**, Susp.	.....do	Do.
North Hudson, Village of, St. Croix County.	555568	September 10, 1971, Emerg; January 12, 1973, Reg; Date of publication in the **Federal Register**, Susp.	.....do	Do.

State and location	Community No.	Effective date authorization/cancellation of sale of flood insurance in community	Current effective map date	Date certain Federal assistance no longer available in SFHAs
River Falls, City of, St. Croix County	550330	March 30, 1972, Emerg; December 15, 1982, Reg; Date of publication in the **Federal Register**, Susp.	.....do	Do.
Somerset, Village of, St. Croix County	550386	April 16, 1975, Emerg; June 1, 1987, Reg; Date of publication in the **Federal Register**, Susp.	.....do	Do.
Spring Valley, Village of, St. Croix County.	550331	July 2, 1975, Emerg; March 15, 1984, Reg; Date of publication in the **Federal Register**, Susp.	.....do	Do.
St. Croix County, Unincorporated Areas	555578	April 2, 1971, Emerg; April 27, 1973, Reg; Date of publication in the **Federal Register**, Susp.	.....do	Do.
Wilson, Village of, St. Croix County	550389	June 15, 1976, Emerg; May 1, 1987, Reg; Date of publication in the **Federal Register**, Susp.	.....do	Do.
Woodville, Village of, St. Croix County	550390	August 15, 1975, Emerg; May 4, 1989, Reg; Date of publication in the **Federal Register**, Susp.	.....do	Do.
Region VI				
Arkansas:				
Alma, City of, Crawford County	050236	March 25, 1974, Emerg; April 1, 1981, Reg; Date of publication in the **Federal Register**, Susp.	.....do	Do.
Altheimer, City of, Jefferson County	050107	September 16, 1975, Emerg; August 15, 1980, Reg; Date of publication in the **Federal Register**, Susp.	.....do	Do.
Cedarville, City of, Crawford County	050505	Emerg; June 26, 2006, Reg; Date of publication in the **Federal Register**, Susp.	.....do	Do.
Chester, Town of, Crawford County	050050	May 18, 1990, Emerg; August 5, 1991, Reg; Date of publication in the **Federal Register**, Susp.	.....do	Do.
Crawford County, Unincorporated Areas	050428	June 29, 1990, Emerg; August 5, 1991, Reg; Date of publication in the **Federal Register**, Susp.	.....do	Do.
Dyer, Town of, Crawford County	050408	Emerg; January 30, 2004, Reg; Date of publication in the **Federal Register**, Susp.	.....do	Do.
Humphrey, City of, Jefferson County	050108	July 31, 1975, Emerg; November 1, 1985, Reg; Date of publication in the **Federal Register**, Susp.	.....do	Do.
Jefferson County, Unincorporated Areas.	050440	September 6, 1978, Emerg; April 16, 1991, Reg; Date of publication in the **Federal Register**, Susp.	.....do	Do.
Kibler, City of, Crawford County	050337	Emerg; November 30, 2006, Reg; Date of publication in the **Federal Register**, Susp.	.....do	Do.
Mountainburg, City of, Crawford County	050051	April 15, 1981, Emerg; April 15, 1981, Reg; Date of publication in the **Federal Register**, Susp.	.....do	Do.
Mulberry, City of, Crawford County	050354	May 27, 1981, Emerg; May 27, 1981, Reg; Date of publication in the **Federal Register**, Susp.	.....do	Do.
Pine Bluff, City of, Jefferson County	050109	August 13, 1974, Emerg; July 16, 1981, Reg; Date of publication in the **Federal Register**, Susp.	.....do	Do.
Redfield, City of, Jefferson County	050282	April 13, 1976, Emerg; August 26, 1977, Reg; Date of publication in the **Federal Register**, Susp.	.....do	Do.
Rudy, City of, Crawford County	050052	April 14, 1975, Emerg; June 25, 1976, Reg; Date of publication in the **Federal Register**, Susp.	.....do	Do.
Sherrill, Town of, Jefferson County	050110	June 19, 1975, Emerg; June 30, 1976, Reg; Date of publication in the **Federal Register**, Susp.	.....do	Do.
Van Buren, City of, Crawford County	050053	January 16, 1974, Emerg; November 16, 1977, Reg; Date of publication in the **Federal Register**, Susp.	.....do	Do.
Wabbaseka, City of, Jefferson County	050111	June 26, 1975, Emerg; December 2, 1980, Reg; Date of publication in the **Federal Register**, Susp.	.....do	Do.

State and location	Community No.	Effective date authorization/cancellation of sale of flood insurance in community	Current effective map date	Date certain Federal assistance no longer available in SFHAs
White Hall, City of, Jefferson County	050375	August 11, 1975, Emerg; September 16, 1988, Reg; Date of publication in the **Federal Register**, Susp.	.....do	Do.

* do=Ditto.
Code for reading third column: Emerg. —Emergency; Reg. —Regular; Susp. —Suspension.

Dated: March 11, 2009.

Michael K. Buckley,

Acting Assistant Administrator, Mitigation Directorate, Department of Homeland Security, Federal Emergency Management Agency.

[FR Doc. E9–6671 Filed 3–24–09; 8:45 am]

BILLING CODE 9110–12–P

DEPARTMENT OF HOMELAND SECURITY

Federal Emergency Management Agency

44 CFR Part 64

[Docket ID FEMA–2008–0020; Internal Agency Docket No. FEMA–8061]

Suspension of Community Eligibility

AGENCY: Federal Emergency Management Agency, DHS.

ACTION: Final rule.

SUMMARY: This rule identifies communities, where the sale of flood insurance has been authorized under the National Flood Insurance Program (NFIP), that are scheduled for suspension from the NFIP on the effective dates listed within this rule because of noncompliance with the floodplain management requirements of the program. If the Federal Emergency Management Agency (FEMA) receives documentation that the community has adopted the required floodplain management measures prior to the effective suspension date given in this rule, the suspension will not occur and a notice of this will be provided by publication in the **Federal Register** on a subsequent date.

DATES: *Effective Dates:* The effective date of each community's scheduled suspension is the third date (''Susp.'') listed in the third column of the following tables.

FOR FURTHER INFORMATION CONTACT: If you want to determine whether a particular community was suspended on the suspension date or for further information, contact David Stearrett, Mitigation Directorate, Federal Emergency Management Agency, 500 C Street, SW., Washington, DC 20472, (202) 646–2953.

SUPPLEMENTARY INFORMATION: The NFIP enables property owners to purchase flood insurance which is generally not otherwise available. In return, communities agree to adopt and administer local floodplain management aimed at protecting lives and new construction from future flooding. Section 1315 of the National Flood Insurance Act of 1968, as amended, 42 U.S.C. 4022, prohibits flood insurance coverage as authorized under the NFIP, 42 U.S.C. 4001 *et seq.* unless an appropriate public body adopts adequate floodplain management measures with effective enforcement measures. The communities listed in this document no longer meet that statutory requirement for compliance with program regulations, 44 CFR part 59. Accordingly, FEMA is suspending these communities from the NFIP on the effective date identified in the third column of the chart below. As of that date, flood insurance will no longer be available in the community. However, some of these communities may adopt and submit the required documentation of legally enforceable floodplain management measures after this rule is published, but prior to the actual suspension date. These communities will not be suspended and will continue their eligibility for the sale of insurance. FEMA will publish in the **Federal Register** a notice withdrawing the suspension of those communities that submit the required documention before the applicable suspension date(s).

In addition, FEMA has identified the Special Flood Hazard Areas (SFHAs) in these communities by publishing a Flood Insurance Rate Map (FIRM). The date of the FIRM, if one has been published, is indicated in the fourth column of the table. No direct Federal financial assistance (except assistance pursuant to the Robert T. Stafford Disaster Relief and Emergency Assistance Act not in connection with a flood) may legally be provided for construction or acquisition of buildings in identified SFHAs for communities not participating in the NFIP and identified for more than a year on FEMA's initial flood insurance map of the community as having flood-prone areas (section 202(a) of the Flood Disaster Protection Act of 1973, 42 U.S.C. 4106(a), as amended). This prohibition against certain types of Federal assistance becomes effective for the communities listed on the date shown in the last column.

The Administrator finds that notice and public comment under 5 U.S.C. 553(b) are impracticable and unnecessary because communities listed in this final rule have been adequately notified. Each community receives 6-month, 90-day, and 30-day notification letters addressed to the Chief Executive Officer stating that the community will be suspended unless the required floodplain management measures are met prior to the effective suspension date. Since these notifications were made, this final rule may take effect within less than 30 days.

National Environmental Policy Act. This rule is categorically excluded from the requirements of 44 CFR part 10, Environmental Considerations. No environmental impact assessment has been prepared.

Regulatory Flexibility Act. The Administrator has determined that this rule is exempt from the requirements of the Regulatory Flexibility Act because the National Flood Insurance Act of 1968, as amended, 42 U.S.C. 4022, prohibits flood insurance coverage unless an appropriate public body adopts adequate floodplain management measures with effective enforcement measures. The communities listed no longer comply with the statutory requirements, and after the effective date, flood insurance will no longer be available in the communities unless remedial action takes place.

Regulatory Classification. This final rule is not a significant regulatory action under the criteria of section 3(f) of Executive Order 12866 of September 30, 1993, Regulatory Planning and Review, 58 FR 51735.

Executive Order 13132, Federalism. This rule involves no policies that have federalism implications under Executive Order 13132.

Executive Order 12988, Civil Justice Reform. This rule meets the applicable standards of Executive Order 12988.

Paperwork Reduction Act. This rule does not involve any collection of information for purposes of the Paperwork Reduction Act, 44 U.S.C. 3501 *et seq.*

List of Subjects in 44 CFR Part 64

Flood insurance, Floodplains.

■ Accordingly, 44 CFR part 64 is amended as follows:

PART 64—[AMENDED]

■ 1. The authority citation for part 64 continues to read as follows:

Authority: 42 U.S.C. 4001 *et seq.*; Reorganization Plan No. 3 of 1978, 3 CFR, 1978 Comp.; p. 329; E.O. 12127, 44 FR 19367, 3 CFR, 1979 Comp.; p. 376.

§ 64.6 [Amended]

■ 2. The tables published under the authority of § 64.6 are amended as follows:

State and location	Community No.	Effective date authorization/cancellation of sale of flood insurance in community	Current effective map date	Date certain Federal assistance no longer available in SFHAs
Region IV				
Alabama:				
Monroe County, Unincorporated Areas	010325	December 21, 1978, Emerg; June 4, 1990, Reg; March 25, 2009, Susp.	Feb. 04, 2009 ...	Mar. 25, 2009.
Monroeville, City of, Monroe County	010173	July 2, 1975, Emerg; March 18, 1985, Reg; March 25, 2009, Susp.	.....*do	Do.
Florida:				
Chattahoochee, City of, Gadsden County.	120092	June 21, 1974, Emerg; September 4, 1987, Reg; March 25, 2009, Susp.	.....do	Do.
Columbia County, Unincorporated Areas.	120070	December 16, 1975, Emerg; January 6, 1988, Reg; March 25, 2009, Susp.	.....do	Do.
Gadsden County, Unincorporated Areas	120091	July 10, 1975, Emerg; May 2, 1991, Reg; March 25, 2009, Susp.	.....do	Do.
Havana, Town of, Gadsden County	120411	June 12, 1979, Emerg; June 17, 1986, Reg; March 25, 2009, Susp.	.....do	Do.
Lake Butler, City of, Union County	120595	March 24, 1978, Emerg; July 3, 1986, Reg; March 25, 2009, Susp.	.....do	Do.
Lake City, City of, Columbia County	120406	October 2, 1975, Emerg; January 6, 1988, Reg; March 25, 2009, Susp.	.....do	Do.
Quincy, City of, Gadsden County	120093	July 11, 1975, Emerg; February 1, 1987, Reg; March 25, 2009, Susp.	.....do	Do.
Union County, Unincorporated Areas ...	120422	August 22, 1979, Emerg; August 4, 1988, Reg; March 25, 2009, Susp.	.....do	Do.
Worthington Springs, City of, Union County.	120594	May 29, 1980, Emerg; June 3, 1986, Reg; March 25, 2009, Susp.	.....do	Do.
North Carolina:				
Aulander, City of, Bertie County	370018	June 27, 2000, Emerg; — Reg; March 25, 2009, Susp.	.....do	Do.
Avery County, Unincorporated Areas	370010	February 12, 1976, Emerg; September 28, 1990, Reg; March 25, 2009, Susp.	.....do	Do.
Bakersville, Town of, Mitchell County ...	370162	October 16, 1979, Emerg; May 1, 1987, Reg; March 25, 2009, Susp.	.....do	Do.
Bertie County, Unincorporated Areas ...	370290	December 4, 1985, Emerg; December 4, 1985, Reg; March 25, 2009, Susp.	.....do	Do.
Chowan County, Unincorporated Areas	370301	August 25, 1977, Emerg; July 3, 1985, Reg; March 25, 2009, Susp.	.....do	Do.
Conway, Town of, Northampton County	370174	June 10, 1975, Emerg; August 1, 1987, Reg; March 25, 2009, Susp.	.....do	Do.
Gaston, Town of, Northampton County	370413	January 9, 1980, Emerg; — Reg; March 25, 2009, Susp.	.....do	Do.
Jackson, Town of, Northampton County	370175	March 29, 1976, Emerg; July 2, 1987, Reg; March 25, 2009, Susp.	.....do	Do.
Lasker, Town of, Northampton County	370580	February 10, 2006, Emerg; — Reg; March 25, 2009, Susp.	.....do	Do.
McDowell County, Unincorporated Areas.	370148	January 23, 1974, Emerg; July 15, 1988, Reg; March 25, 2009, Susp.	.....do	Do.
Mitchell County, Unincorporated Areas	370161	July 18, 1979, Emerg; September 4, 1986, Reg; March 25, 2009, Susp.	.....do	Do.
Northampton County, Unincorporated Areas.	370173	July 24, 1975, Emerg; November 4, 1988, Reg; March 25, 2009, Susp.	.....do	Do.
Roxobel, Town of, Bertie County	370605	November 26, 2002, Emerg; — Reg; March 25, 2009, Susp.	.....do	Do.
Severn, Town of, Northampton County	370422	February 13, 1984, Emerg; February 1, 1987, Reg; March 25, 2009, Susp.	.....do	Do.
Spruce Pine, Town of, Mitchell County	370163	July 7, 1975, Emerg; September 2, 1988, Reg; March 25, 2009, Susp.	.....do	Do.
Windsor, Town of, Bertie County	370019	March 14, 1974, Emerg; July 18, 1977, Reg; March 25, 2009, Susp.	.....do	Do.

State and location	Community No.	Effective date authorization/cancellation of sale of flood insurance in community	Current effective map date	Date certain Federal assistance no longer available in SFHAs
Woodland, Town of, Northampton County.	370177	March 27, 1979, Emerg; March 1, 1987, Reg; March 25, 2009, Susp.	.....do	Do.
South Carolina: James Island, Town of, Charleston County	450263	June 30, 1970, Emerg; April 23, 1971, Reg; March 25, 2009, Susp.	.....do.	
Tennessee:				
Jasper, Town of, Marion County	475429	July 30, 1971, Emerg; February 26, 1972, Reg; March 25, 2009, Susp.	.....do	Do.
Kimball, Town of, Marion County	470116	July 1, 1975, Emerg; May 19, 1987, Reg; March 25, 2009, Susp.	.....do	Do.
Marion County, Unincorporated Areas ..	470114	October 23, 1973, Emerg; May 15, 1980, Reg; March 25, 2009, Susp.	.....do	Do.
New Hope, City of, Marion County	470377	October 5, 1981, Emerg; September 27, 1985, Reg; March 25, 2009, Susp.	.....do	Do.
South Pittsburg, City of, Marion County	475447	July 9, 1971, Emerg; April 14, 1972, Reg; March 25, 2009, Susp.	.....do	Do.
Region V				
Illinois:				
Joliet, City of, Kendall County	170702	April 13, 1973, Emerg; February 4, 1981, Reg; March 25, 2009, Susp.	.....do	Do.
Kendall County, Unincorporated Areas	170341	July 5, 1973, Emerg; July 19, 1982, Reg; March 25, 2009, Susp.	.....do	Do.
Lisbon, Village of, Kendall County	170342	June 11, 1982, Emerg; June 11, 1982, Reg; March 25, 2009, Susp.	.....do	Do.
Millbrook, Village of, Kendall County	171193	— Emerg; — Reg; March 25, 2009, Susp.	.....do	Do.
Millington, Village of, Kendall County	170343	May 28, 1975, Emerg; June 1, 1982, Reg; March 25, 2009, Susp.	.....do	Do.
Minooka, Village of, Kendall County	171019	— Emerg; March 12, 1992, Reg; March 25, 2009, Susp.	.....do	Do.
Newark, Village of, Kendall County	170344	April 28, 1975, Emerg; June 1, 1982, Reg; March 25, 2009, Susp.	.....do	Do.
Oswego, Village of, Kendall County	170345	April 16, 1975, Emerg; June 1, 1982, Reg; March 25, 2009, Susp.	.....do	Do.
Plainfield, Village of, Kendall County	170771	May 21, 1975, Emerg; November 17, 1982, Reg; March 25, 2009, Susp.	.....do	Do.
Plano, City of, Kendall County	170346	March 7, 1975, Emerg; September 30, 1976, Reg; March 25, 2009, Susp.	.....do	Do.
Wisconsin:				
Appleton, City of, Calumet County	555542	April 23, 1971, Emerg; April 6, 1973, Reg; March 25, 2009, Susp.	.....do	Do.
Brillion, City of, Calumet County	550036	April 22, 1975, Emerg; June 15, 1981, Reg; March 25, 2009, Susp.	.....do	Do.
Calumet County, Unincorporated Areas	550035	November 26, 1976, Emerg; May 3, 1982, Reg; March 25, 2009, Susp.	.....do	Do.
Chilton, City of, Calumet County	550037	June 11, 1975, Emerg; March 16, 1981, Reg; March 25, 2009, Susp.	.....do	Do.
Kiel, City of, Calumet County	550239	July 10, 1975, Emerg; January 3, 1985, Reg; March 25, 2009, Susp.	.....do	Do.
Menasha, City of, Calumet County	550510	April 25, 1973, Emerg; April 3, 1978, Reg; March 25, 2009, Susp.	.....do	Do.
New Holstein, City of, Calumet County	550039	October 16, 1974, Emerg; July 2, 1981, Reg; March 25, 2009, Susp.	.....do	Do.
Potter, Village of, Calumet County	550609	— Emerg; July 30, 1996, Reg; March 25, 2009, Susp.	.....do	Do.
Stockbridge, Village of, Calumet County	550040	August 25, 1975, Emerg; May 3, 1982, Reg; March 25, 2009, Susp.	.....do	Do.
Region VII				
Nebraska:				
McCook, City of, Red Willow County	310181	February 6, 1978, Emerg; May 2, 1983, Reg; March 25, 2009, Susp.	.....do	Do.
Red Willow County, Unincorporated Areas.	310469	June 18, 1984, Emerg; May 1, 1988, Reg; March 25, 2009, Susp.	.....do	Do.

* do = Ditto.

Code for reading third column: Emerg. —Emergency; Reg. —Regular; Susp. —Suspension.

Dated: January 15, 2009.

Michael K. Buckley,

Acting Assistant Administrator, Mitigation Directorate, Department of Homeland Security, Federal Emergency Management Agency.

[FR Doc. E9–6587 Filed 3–24–09; 8:45 am]

BILLING CODE 9110–12–P

DEPARTMENT OF HOMELAND SECURITY

Federal Emergency Management Agency

44 CFR Part 64

[Docket ID FEMA–2008–0020; Internal Agency Docket No. FEMA–8065]

Suspension of Community Eligibility

AGENCY: Federal Emergency Management Agency, DHS.

ACTION: Final rule.

SUMMARY: This rule identifies communities, where the sale of flood insurance has been authorized under the National Flood Insurance Program (NFIP), that are scheduled for suspension from the NFIP on the effective dates listed within this rule because of noncompliance with the floodplain management requirements of the program. If the Federal Emergency Management Agency (FEMA) receives documentation that the community has adopted the required floodplain management measures prior to the effective suspension date given in this rule, the suspension will not occur and a notice of this will be provided by publication in the **Federal Register** on a subsequent date.

DATES: *Effective Dates:* The effective date of each community's scheduled suspension is the third date (''Susp.'') listed in the third column of the following tables.

FOR FURTHER INFORMATION CONTACT: If you want to determine whether a particular community was suspended on the suspension date or for further information, contact David Stearrett, Mitigation Directorate, Federal Emergency Management Agency, 500 C Street, SW., Washington, DC 20472, (202) 646–2953.

SUPPLEMENTARY INFORMATION: The NFIP enables property owners to purchase flood insurance which is generally not otherwise available. In return, communities agree to adopt and administer local floodplain management aimed at protecting lives and new construction from future flooding. Section 1315 of the National Flood Insurance Act of 1968, as amended, 42 U.S.C. 4022, prohibits flood insurance coverage as authorized under the NFIP, 42 U.S.C. 4001 *et seq.* unless an appropriate public body adopts adequate floodplain management measures with effective enforcement measures. The communities listed in this document no longer meet that statutory requirement for compliance with program regulations, 44 CFR part 59. Accordingly, FEMA is suspending these communities from the NFIP on the effective date identified in the third column of the chart below. As of that date, flood insurance will no longer be available in the community. However, some of these communities may adopt and submit the required documentation of legally enforceable floodplain management measures after this rule is published but prior to the actual suspension date. These communities will not be suspended and will continue their eligibility for the sale of insurance. FEMA will publish in the **Federal Register** a notice withdrawing the suspension of those communities that submit the required documentation before the applicable suspension date(s).

In addition, FEMA has identified the Special Flood Hazard Areas (SFHAs) in these communities by publishing a Flood Insurance Rate Map (FIRM). The date of the FIRM, if one has been published, is indicated in the fourth column of the table. No direct Federal financial assistance (except assistance pursuant to the Robert T. Stafford Disaster Relief and Emergency Assistance Act not in connection with a flood) may legally be provided for construction or acquisition of buildings in identified SFHAs for communities not participating in the NFIP and identified for more than a year on FEMA's initial flood insurance map of the community as having flood-prone areas (section 202(a) of the Flood Disaster Protection Act of 1973, 42 U.S.C. 4106(a), as amended). This prohibition against certain types of Federal assistance becomes effective for the communities listed on the date shown in the last column.

The Administrator finds that notice and public comment under 5 U.S.C. 553(b) are impracticable and unnecessary because communities listed in this final rule have been adequately notified. Each community receives 6-month, 90-day, and 30-day notification letters addressed to the Chief Executive Officer stating that the community will be suspended unless the required floodplain management measures are met prior to the effective suspension date. Since these notifications were made, this final rule may take effect within less than 30 days.

National Environmental Policy Act. This rule is categorically excluded from the requirements of 44 CFR part 10, Environmental Considerations. No environmental impact assessment has been prepared.

Regulatory Flexibility Act. The Administrator has determined that this rule is exempt from the requirements of the Regulatory Flexibility Act because the National Flood Insurance Act of 1968, as amended, 42 U.S.C. 4022, prohibits flood insurance coverage unless an appropriate public body adopts adequate floodplain management measures with effective enforcement measures. The communities listed no longer comply with the statutory requirements, and after the effective date, flood insurance will no longer be available in the communities unless remedial action takes place.

Regulatory Classification. This final rule is not a significant regulatory action under the criteria of section 3(f) of Executive Order 12866 of September 30, 1993, Regulatory Planning and Review, 58 FR 51735.

Executive Order 13132, Federalism. This rule involves no policies that have federalism implications under Executive Order 13132.

Executive Order 12988, Civil Justice Reform. This rule meets the applicable standards of Executive Order 12988.

Paperwork Reduction Act. This rule does not involve any collection of information for purposes of the Paperwork Reduction Act, 44 U.S.C. 3501 *et seq.*

List of Subjects in 44 CFR Part 64

Flood insurance, Floodplains.

■ Accordingly, 44 CFR part 64 is amended as follows:

PART 64—[AMENDED]

■ 1. The authority citation for part 64 continues to read as follows:

Authority: 42 U.S.C. 4001 *et seq.*; Reorganization Plan No. 3 of 1978, 3 CFR, 1978 Comp.; p. 329; E.O. 12127, 44 FR 19367, 3 CFR, 1979 Comp.; p. 376.

§ 64.6 [Amended]

■ 2. The tables published under the authority of § 64.6 are amended as follows:

State and location	Community No.	Effective date authorization/cancellation of sale of flood insurance in community	Current effective map date	Date certain Federal assistance no longer available in SFHAs
Region I				
Rhode Island:				
Burrville, Town of, Providence County ..	440013	June 11, 1975, Emerg; July 2, 1979, Reg; Date of publication in **Federal Register**, Susp.	Mar. 2, 2009	Date of publication in **Federal Register**
Cranston, City of, Providence County ...	445396	September 11, 1970, Emerg; August 27, 1971, Reg; Date of publication in **Federal Register**, Susp.	.....*do	Do.
Central Falls, City of, Providence County.	445394	November 6, 1970, Emerg; May 28, 1971, Reg; Date of publication in **Federal Register**, Susp.	.....do	Do.
Cumberland, Town of, Providence County.	440016	July 15, 1975, Emerg; December 16, 1980, Reg; Date of publication in **Federal Register**, Susp.	.....do	Do.
East Providence, City of, Providence County.	445398	June 5, 1970, Emerg; May 18, 1973, Reg; Date of publication in **Federal Register**, Susp.	.....do	Do.
Foster, Town of, Providence County	440033	May 14, 1975, Emerg; December 4, 1985, Reg; Date of publication in **Federal Register**, Susp.	.....*do	Do.
Glocester, Town of, Providence County	440034	December 29, 1975, Emerg; August 15, 1979, Reg; Date of publication in **Federal Register**, Susp.	.....do	Do.
Johnston, Town of, Providence County	440018	August 1, 1975, Emerg; September 1, 1978, Reg; Date of publication in **Federal Register**, Susp.	.....do	Do.
Lincoln, Town of, Providence County ...	445400	May 5, 1972, Emerg; November 30, 1973, Reg; Date of publication in **Federal Register**, Susp.	.....do	Do.
North Providence, Town of, Providence County.	440020	October 6, 1972, Emerg; December 15, 1977, Reg; Date of publication in **Federal Register**, Susp.	.....do	Do.
North Smithfield, Town of, Providence County.	440021	May 6, 1975, Emerg; August 1, 1978, Reg; Date of publication in **Federal Register**, Susp.	.....do	Do.
Pawtucket, City of, Providence County	440022	January 15, 1971, Emerg; July 16, 1971, Reg; Date of publication in **Federal Register**, Susp.	.....do	Do.
Providence, City of, Providence County	445406	September 11, 1970, Emerg; December 11, 1970, Reg; Date of publication in **Federal Register**, Susp.	.....do	Do.
Scituate, Town of, Providence County ..	440024	January 13, 1975, Emerg; January 2, 1981, Reg; Date of publication in **Federal Register**, Susp.	.....do	Do.
Smithfield, Town of, Providence County	440025	December 17, 1971, Emerg; March 1, 1977, Reg; Date of publication in **Federal Register**, Susp.	.....do	Do.
Region III				
Virginia:				
Caroline County, Unincorporated Areas	510249	June 3, 1974, Emerg; August 15, 1989, Reg; Date of publication in **Federal Register**, Susp.	.....do	Do.
Region IV				
North Carolina:				
Belmont, City of, Gaston County	370320	March 26, 1976, Emerg; November 1, 1979, Reg; Date of publication in **Federal Register**, Susp.	.....do	Do.
Charlotte, City of, Mecklenburg County	370159	April 12, 1973, Emerg; August 15, 1978, Reg; Date of publication in **Federal Register**, Susp.	.....do	Do.
Cornelius, Town of, Mecklenburg County.	370498	—, Emerg; September 30, 1997, Reg; Date of publication in **Federal Register**, Susp.	.....do	Do.
Davidson, Town of, Mecklenburg County.	370503	—, Emerg; October 16, 1997, Reg; Date of publication in **Federal Register**, Susp.	.....do	Do.
Gaston County, Unincorporated Areas	370099	April 16, 1976, Emerg; May 1, 1980, Reg; Date of publication in **Federal Register**, Susp.	.....do	Do.

State and location	Community No.	Effective date authorization/cancellation of sale of flood insurance in community	Current effective map date	Date certain Federal assistance no longer available in SFHAs
Huntersville, Town of, Mecklenburg County.	370478	January 11, 1995, Emerg; February 4, 2004, Reg; Date of publication in **Federal Register**, Susp.	.....do	Do.
Mathews, Town of, Mecklenburg County.	370310	January 11, 1995, Emerg; February 4, 2004, Reg; Date of publication in **Federal Register**, Susp.	.....do	Do.
Mecklenburg County, Unincorporated Areas.	370158	May 17, 1973, Emerg; June 1, 1981, Reg; Date of publication in **Federal Register**, Susp.	.....do	Do.
Mint Hill, Town of, Mecklenburg County	370539	—, Emerg; December 21, 2007, Reg; Date of publication in **Federal Register**, Susp.	.....do	Do.
North Wilkesboro, Town of, Wilkes County.	370257	December 28, 1973, Emerg; February 15, 1978, Reg; Date of publication in **Federal Register**, Susp.	.....do	Do.
Pineville, Town of, Mecklenburg County	370160	May 6, 1975, Emerg; March 18, 1987, Reg; Date of publication in **Federal Register**, Susp.	.....do	Do.
Stallings, Town of, Union County	370472	—, Emerg; April 5, 1994, Reg; Date of publication in **Federal Register**, Susp.	.....do	Do.
Union County, Unincorporated Areas ...	370234	August 9, 1983, Emerg; July 18, 1983, Reg; Date of publication in **Federal Register**, Susp.	.....do	Do.
Wilkes County, Unincorporated Areas ..	370256	May 28, 1976, Emerg; March 31, 2003, Reg; Date of publication in **Federal Register**, Susp.	.....do	Do.
Wilkesboro, Town of, Wilkes County	370259	April 15, 1974, Emerg; June 1, 1987, Reg; Date of publication in **Federal Register**, Susp.	.....do	Do.
Region V				
Wisconsin:				
Door County, Unincorporated Areas	550109	April 30, 1973, Emerg; April 3, 1978, Reg; Date of publication in **Federal Register**, Susp.	.....do	Do.
Ephraim, Village of, Door County	550611	December 26, 1986, Emerg; January 15, 1998, Reg; Date of publication in **Federal Register**, Susp.	.....do	Do.
Sturgeon Bay, City of, Door County	550111	May 13, 1975, Emerg; August 5, 1991, Reg; Date of publication in **Federal Register**, Susp.	.....do	Do.
Region VI				
Arkansas:				
Arkansas County, Unincorporated Areas.	050418	April 5, 1989, Emerg; December 1, 1989, Reg; Date of publication in **Federal Register**, Susp.	.....do	Do.
Dewitt, City of, Arkansas County	050001	June 18, 1975, Emerg; July 1, 1987, Reg; Date of publication in **Federal Register**, Susp.	.....do	Do.
Gillett, City of, Arkansas County	050325	May 23, 1975, Emerg; January 17, 1986, Reg; Date of publication in **Federal Register**, Susp.	.....do	Do.
Humphrey, City of, Arkansas County	050108	July 31, 1975, Emerg; November 1, 1985, Reg; Date of publication in **Federal Register**, Susp.	.....do	Do.
St. Charles, Town of, Arkansas County.	050285	August 26, 1975, Emerg; October 12, 1982, Reg; Date of publication in **Federal Register**, Susp.	.....do	Do.
Stuttgart, City of, Arkansas County	050002	April 11, 1975, Emerg; June 1, 1988, Reg; Date of publication in **Federal Register**, Susp.	.....do	Do.
Region VII				
Iowa:				
Bevington, City, Warren County	190273	November 30, 1976, Emerg; May 1, 1987, Reg; Date of publication in **Federal Register**, Susp.	.....do	Do.
Cumming, City of, Warren County	190946	—, Emerg; January 24, 2000, Reg; Date of publication in **Federal Register**, Susp.	.....do	Do.
Indianola, City of, Warren County	190275	June 1, 1977, Emerg; July 31, 1979, Reg; Date of publication in **Federal Register**, Susp.	.....do	Do.

State and location	Community No.	Effective date authorization/cancellation of sale of flood insurance in community	Current effective map date	Date certain Federal assistance no longer available in SFHAs
Lacona, City of, Warren County	190752	December 6, 1976, Emerg; July 1, 1987, Reg; Date of publication in **Federal Register**, Susp.	.....do	Do.
Martensdale, City of, Warren County.	190524	April 28, 1994, Emerg; September 1, 1996, Reg; Date of publication in **Federal Register**, Susp.	.....do	Do.
Norwalk, City of, Warren County	190631	March 3, 1993, Emerg; November 20, 1998, Reg; Date of publication in **Federal Register**, Susp.	.....do	Do.
Warren County, Unincorporated Areas	190912	November 19, 1990, Emerg; July 1, 1991, Reg; Date of publication in **Federal Register**, Susp.	.....do	Do.
Nebraska:				
Beaver City, City, Furnas County	310348	January 19, 1978, Emerg; August 1, 1986, Reg; Date of publication in **Federal Register**, Susp.	.....do	Do.
Cambridge, City of, Furnas County	310087	May 24, 1973, Emerg; March 28, 1980, Reg; Date of publication in **Federal Register**, Susp.	.....do	Do.
Wilsonville, Village of, Furnas County	310335	May 23, 1994, Emerg; November 7, 2001, Reg; Date of publication in **Federal Register**, Susp.	.....do	Do.
Region VIII				
Wyoming:				
Washakie County, Unincorporated Areas.	560089	October 30, 2000, Emerg;—, Reg; Date of publication in **Federal Register**, Susp.	.....do	Do.
Worland, City of, Washakie County	560056	April 30, 1975, Emerg; September 15, 1978, Reg; Date of publication in **Federal Register**, Susp.	.....do	Do.

* do = Ditto.
Code for reading third column: Emerg.—Emergency; Reg.—Regular; Susp.—Suspension.

Michael K. Buckley,

Acting Assistant Administrator, Mitigation Directorate, Department of Homeland Security, Federal Emergency Management Agency.

[FR Doc. E9–6667 Filed 3–24–09; 8:45 am]

BILLING CODE 9110–12–P

DEPARTMENT OF HOMELAND SECURITY

Federal Emergency Management Agency

44 CFR Part 65

[Docket ID FEMA–2008–0020; Internal Agency Docket No. FEMA–B–1030]

Changes in Flood Elevation Determinations

AGENCY: Federal Emergency Management Agency, DHS.

ACTION: Interim rule.

SUMMARY: This interim rule lists communities where modification of the Base (1% annual-chance) Flood Elevations (BFEs) is appropriate because of new scientific or technical data. New flood insurance premium rates will be calculated from the modified BFEs for new buildings and their contents.

DATES: These modified BFEs are currently in effect on the dates listed in the table below and revise the Flood Insurance Rate Maps (FIRMs) in effect prior to this determination for the listed communities.

From the date of the second publication of these changes in a newspaper of local circulation, any person has ninety (90) days in which to request through the community that the Mitigation Assistant Administrator of FEMA reconsider the changes. The modified BFEs may be changed during the 90-day period.

ADDRESSES: The modified BFEs for each community are available for inspection at the office of the Chief Executive Officer of each community. The respective addresses are listed in the table below.

FOR FURTHER INFORMATION CONTACT: William R. Blanton, Jr., Engineering Management Branch, Mitigation Directorate, Federal Emergency Management Agency, 500 C Street, SW., Washington, DC 20472, (202) 646–3151.

SUPPLEMENTARY INFORMATION: The modified BFEs are not listed for each community in this interim rule. However, the address of the Chief Executive Officer of the community where the modified BFE determinations are available for inspection is provided.

Any request for reconsideration must be based on knowledge of changed conditions or new scientific or technical data.

The modifications are made pursuant to section 201 of the Flood Disaster Protection Act of 1973, 42 U.S.C. 4105, and are in accordance with the National Flood Insurance Act of 1968, 42 U.S.C. 4001 *et seq.,* and with 44 CFR part 65.

For rating purposes, the currently effective community number is shown and must be used for all new policies and renewals.

The modified BFEs are the basis for the floodplain management measures that the community is required to either adopt or to show evidence of being already in effect in order to qualify or to remain qualified for participation in the National Flood Insurance Program (NFIP).

These modified BFEs, together with the floodplain management criteria required by 44 CFR 60.3, are the minimum that are required. They should not be construed to mean that the community must change any existing ordinances that are more

stringent in their floodplain management requirements. The community may at any time enact stricter requirements of its own, or pursuant to policies established by the other Federal, State, or regional entities. The changes BFEs are in accordance with 44 CFR 65.4.

National Environmental Policy Act. This interim rule is categorically excluded from the requirements of 44 CFR part 10, Environmental Consideration. An environmental impact assessment has not been prepared.

Regulatory Flexibility Act. As flood elevation determinations are not within the scope of the Regulatory Flexibility Act, 5 U.S.C. 601–612, a regulatory flexibility analysis is not required.

Regulatory Classification. This interim rule is not a significant regulatory action under the criteria of section 3(f) of Executive Order 12866 of September 30, 1993, Regulatory Planning and Review, 58 FR 51735.

Executive Order 13132, Federalism. This interim rule involves no policies that have federalism implications under Executive Order 13132, Federalism.

Executive Order 12988, Civil Justice Reform. This interim rule meets the applicable standards of Executive Order 12988.

List of Subjects in 44 CFR Part 65

Flood insurance, Floodplains, Reporting and recordkeeping requirements.

■ Accordingly, 44 CFR part 65 is amended to read as follows:

PART 65—[AMENDED]

■ 1. The authority citation for part 65 continues to read as follows:

Authority: 42 U.S.C. 4001 *et seq.* ; Reorganization Plan No. 3 of 1978, 3 CFR, 1978 Comp., p. 329; E.O. 12127, 44 FR 19367, 3 CFR, 1979 Comp., p. 376.

§ 65.4 [Amended]

■ 2. The tables published under the authority of § 65.4 are amended as follows:

State and county	Location and Case No.	Date and name of newspaper where notice was published	Chief executive officer of community	Effective date of modification	Community No.
Alabama:					
Elmore	City of Millbrook (08–04–3794P).	December 11, 2008, December 18, 2008, *The Millbrook Independent*.	The Honorable Al Kelley, Mayor, City of Millbrook, 5010 Brownswood Circle, Millbrook, AL 36054.	April 17, 2009	010370
Montgomery	City of Montgomery (07–04–3037P).	December 11, 2008, December 18, 2008, *Montgomery Advertiser*.	The Honorable Bobby N. Bright, Mayor, City of Montgomery, P.O. Box 1111, Montgomery, AL 36101.	April 17, 2009	010174
Arizona: Coconino	City of Flagstaff (08–09–1360P).	December 15, 2008, December 22, 2008, *Arizona Daily Sun*.	The Honorable Sara Presler, Mayor, City of Flagstaff, 211 West Aspen Avenue, Flagstaff, AZ 86001.	November 28, 2008	040020
Colorado:					
Garfield	Unincorporated areas of Garfield County (07–08–0852P).	August 14, 2008, August 21, 2008, *Citizen Telegram*.	The Honorable Trési Houpt, Chairman, Garfield County Board of Commissioners, 108 Eighth Street, Glenwood Springs, CO 81601.	December 19, 2008	080205
Garfield	City of Rifle (07–08–0852P).	August 14, 2008, August 21, 2008, *Citizen Telegram*.	The Honorable John Hier, City Manager, City of Rifle, 202 Railroad Avenue, Rifle, CO 81650.	December 19, 2008	085078
Florida: Collier	City of Marco Island (08–04–5939P).	December 8, 2008, December 15, 2008, *Naples Daily News*.	The Honorable William D. Trotter, Chairman, City Council, City of Marco Island, 50 Bald Eagle Drive, Marco Island, FL 34145.	April 14, 2009	120426
Georgia: Columbia	Unincorporated areas of Columbia County (08–04–4889P).	December 14, 2008, December 21, 2008, *The Columbia County News Times*.	The Honorable Ron C. Cross, Chairman, Columbia County Board of Commissioners, P.O. Box 498, Evans, GA 30809.	April 20, 2009	130059
Maryland:					
Carroll and Frederick.	Unincorporated areas of Carroll County (08–03–1713P).	December 15, 2008, December 22, 2008, *Carroll County Times*.	The Honorable Julia Gouge, President, Carroll County Board of Commissioners, 225 North Center Street, Westminster, MD 21157.	April 21, 2009	240015
Carroll and Frederick.	Unincorporated areas of Frederick County (08–03–1713P).	December 12, 2008, December 19, 2008, *Frederick News Post*.	The Honorable Jan Gardner, President, Frederick County Board of Commissioners, 12 East Church Street, Frederick, MD 21701.	April 21, 2009	240027
Missouri:					
Stoddard	City of Dexter (07–07–1785P).	February 14, 2008, February 21, 2008, *Daily Statesman*.	The Honorable Joe E. Weber, Mayor, City of Dexter, 301 East Stoddard Street, Dexter, MO 63841.	May 22, 2008	290424
Stoddard	Unincorporated areas of Stoddard County (07–07–1785P).	February 14, 2008, February 21, 2008, *Daily Statesman*.	Mr. Greg Mathis, Presiding Commissioner, Stoddard County, P.O. Box 110, Bloomfield, MO 63825–0110.	May 22, 2008	290845
New Hampshire: Cheshire.	City of Keene (08–01–0182P).	February 28, 2008, March 6, 2008, *The Keene Sentinel*.	The Honorable Philip Dale Pregent, Mayor, City of Keene, Three Washington Street, Keene, NH 03431.	March 20, 2008	330023
North Carolina:					
Alamance	Unincorporated areas of Alamance County (08–04–4817P).	December 10, 2008, December 17, 2008, *The Times-News*.	Mr. David I. Smith, Manager, Alamance County, Alamance County Office Building, 124 West Elm Street, Graham, NC 27253.	April 16, 2009	370001
Randolph	City of Archdale (08–04–4163P).	December 4, 2008, December 11, 2008, *The Archdale Trinity-News*.	The Honorable Bert Lance-Stone, Mayor, City of Archdale, 307 Balfour Drive, P.O. Box 14068, Archdale, NC 27263.	November 13, 2008	370273

State and county	Location and Case No.	Date and name of newspaper where notice was published	Chief executive officer of community	Effective date of modification	Community No.
Pennsylvania: Berks	Township of Colebrookdale (08–03–1560P).	December 11, 2008, December 18, 2008, *The Boyertown Area Times*.	The Honorable Todd Gamler, President, Township of Colebrookdale Board of Commissioners, 765 West Philadelphia Avenue, Boyertown, PA 19512.	April 17, 2009	421057
Texas:					
Denton	City of Denton (08–06–2890P).	December 10, 2008, December 17, 2008, *Denton Record-Chronicle*.	The Honorable Mark A. Burroughs, Mayor, City of Denton, 215 East McKinney Street, Denton, TX 76201.	April 16, 2009	480194
Harris	Unincorporated areas of Harris County (07–06–1885P).	December 11, 2008, December 18, 2008, *Houston Chronicle*.	The Honorable Ed Emmett, Harris County Judge, 1001 Preston Street, Suite 911, Houston, TX 77002.	November 28, 2008	480287
Harris	Unincorporated areas of Harris County (08–06–1677P).	December 4, 2008, December 11, 2008, *Houston Chronicle*.	The Honorable Ed Emmett, Harris County Judge, 1001 Preston Street, Suite 911, Houston, TX 77002.	April 10, 2009	480287
Johnson	City of Burleson (08–06–3114P).	December 10, 2008, December 17, 2008, *Burleson Star*.	The Honorable Kenneth Shetter, Mayor, City of Burleson, 141 West Renfro Street, Burleson, TX 76028.	April 16, 2009	485459
Johnson	Unincorporated areas of Johnson County (08–06–1603P).	December 10, 2008, December 17, 2008, *Cleburne Times-Review*.	The Honorable Roger Harmon, Judge, Johnson County, One North Main Street, Suite 304, Cleburne, TX 76031.	December 29, 2008	480879
Johnson	Unincorporated areas of Johnson County (08–06–3114P).	December 10, 2008, December 17, 2008, *Cleburne Times-Review*.	The Honorable Roger Harmon, Johnson County Judge, Two North Mill Street, Room 201, Cleburne, TX 76033.	April 16, 2009	480879

(Catalog of Federal Domestic Assistance No. 97.022, ''Flood Insurance.'')

Dated: January 6, 2009.

Michael K. Buckley,

Acting Assistant Administrator, Mitigation Directorate, Department of Homeland Security, Federal Emergency Management Agency.

[FR Doc. E9–6573 Filed 3–24–09; 8:45 am]

BILLING CODE 9110–12–P

DEPARTMENT OF HOMELAND SECURITY

Federal Emergency Management Agency

44 CFR Part 65

[Docket ID FEMA–2008–0020]

Changes in Flood Elevation Determinations

AGENCY: Federal Emergency Management Agency, DHS.

ACTION: Final rule.

SUMMARY: Modified Base (1% annual-chance) Flood Elevations (BFEs) are finalized for the communities listed below. These modified BFEs will be used to calculate flood insurance premium rates for new buildings and their contents.

DATES: The effective dates for these modified BFEs are indicated on the following table and revise the Flood Insurance Rate Maps (FIRMs) in effect for the listed communities prior to this date.

ADDRESSES: The modified BFEs for each community are available for inspection at the office of the Chief Executive Officer of each community. The respective addresses are listed in the table below.

FOR FURTHER INFORMATION CONTACT: William R. Blanton, Jr., Engineering Management Branch, Mitigation Directorate, Federal Emergency Management Agency, 500 C Street, SW., Washington, DC 20472, (202) 646–3151.

SUPPLEMENTARY INFORMATION: The Federal Emergency Management Agency (FEMA) makes the final determinations listed below of the modified BFEs for each community listed. These modified BFEs have been published in newspapers of local circulation and ninety (90) days have elapsed since that publication. The Mitigation Division Director of FEMA resolved any appeals resulting from this notification.

The modified BFEs are not listed for each community in this notice. However, this final rule includes the address of the Chief Executive Officer of the community where the modified BFEs determinations are available for inspection.

The modified BFEs are made pursuant to section 206 of the Flood Disaster Protection Act of 1973, 42 U.S.C. 4105, and are in accordance with the National Flood Insurance Act of 1968, 42 U.S.C. 4001 *et seq.,* and with 44 CFR part 65.

For rating purposes, the currently effective community number is shown and must be used for all new policies and renewals.

The modified BFEs are the basis for the floodplain management measures that the community is required to either adopt or to show evidence of being already in effect in order to qualify or to remain qualified for participation in the National Flood Insurance Program (NFIP).

These modified BFEs, together with the floodplain management criteria required by 44 CFR 60.3, are the minimum that are required. They should not be construed to mean that the community must change any existing ordinances that are more stringent in their floodplain management requirements. The community may at any time enact stricter requirements of its own, or pursuant to policies established by other Federal, State, or regional entities.

These modified BFEs are used to meet the floodplain management requirements of the NFIP and are also used to calculate the appropriate flood insurance premium rates for new buildings built after these elevations are made final, and for the contents in these buildings. The changes in BFEs are in accordance with 44 CFR 65.4.

National Environmental Policy Act. This final rule is categorically excluded from the requirements of 44 CFR part 10, Environmental Consideration. An environmental impact assessment has not been prepared.

Regulatory Flexibility Act. As flood elevation determinations are not within the scope of the Regulatory Flexibility Act, 5 U.S.C. 601–612, a regulatory flexibility analysis is not required.

Regulatory Classification. This final rule is not a significant regulatory action under the criteria of section 3(f) of

Executive Order 12866 of September 30, 1993, Regulatory Planning and Review, 58 FR 51735.

Executive Order 13132, Federalism. This final rule involves no policies that have federalism implications under Executive Order 13132, Federalism.

Executive Order 12988, Civil Justice Reform. This final rule meets the applicable standards of Executive Order 12988.

List of Subjects in 44 CFR Part 65

Flood insurance, Floodplains, Reporting and recordkeeping requirements.

■ Accordingly, 44 CFR part 65 is amended to read as follows:

PART 65—[AMENDED]

■ 1. The authority citation for part 65 continues to read as follows:

Authority: 42 U.S.C. 4001 *et seq.;* Reorganization Plan No. 3 of 1978, 3 CFR, 1978 Comp., p. 329; E.O. 12127, 44 FR 19367, 3 CFR, 1979 Comp., p. 376.

§ 65.4 [Amended]

■ 2. The tables published under the authority of § 65.4 are amended as follows:

State and county	Location and Case No.	Date and name of newspaper where notice was published	Chief executive officer of community	Effective date of modification	Community No.
Arizona:					
Maricopa (FEMA Docket No: B–1011).	Town of Cave Creek (08–09–0722P).	September 17, 2008, September 24, 2008, *Sonoran News.*	The Honorable Vincent Francia, Mayor, Town of Cave Creek, 5140 East New River Road, Cave Creek, AZ 85331.	January 22, 2009	040129
Maricopa (FEMA Docket No: B–1005).	City of Glendale (08–09–1010P).	August 7, 2008, August 14, 2008, *The Glendale Star.*	The Honorable Elaine M. Scruggs, Mayor, City of Glendale, 5850 West Glendale Avenue, Glendale, AZ 85301.	December 12, 2008	040045
Yavapai (FEMA Docket No: B–1005).	City of Prescott (08–09–0020P).	August 21, 2008, August 28, 2008, *Prescott Daily Courier.*	The Honorable Jack Wilson, Mayor, City of Prescott, 201 South Cortez Street, Prescott, AZ 86303.	December 26, 2008	040098
California:					
Sacramento (FEMA Docket No: B–1015).	City of Folsom (07–09–1657P).	September 17, 2008, September 24, 2008, *The Folsom Telegraph.*	The Honorable Eric King, Mayor, City of Folsom, 50 Natoma Street, Folsom, CA 95630.	January 15, 2009	060263
San Diego (FEMA Docket No: B–1005).	Unincorporated areas of San Diego County (08–09–0332P).	August 18, 2008, August 25, 2008, *San Diego Daily Transcript.*	Mr. Ron Roberts, San Diego County Board of Supervisors, 1600 Pacific Highway, Room 335, San Diego, CA 92101.	December 23, 2008	060284
San Luis Obispo (FEMA Docket No: B–1019).	City of Atascadero (08–09–0724P).	October 22, 2008, October 29, 2008, *Atascadero News.*	The Honorable Tom O'Malley, Mayor, City of Atascadero, 6907 El Camino Real, Atascadero, CA 93422.	October 6, 2008	060700
Colorado:					
.					
Boulder (FEMA Docket No: B–1023).	City of Boulder (08–08–0701P).	October 24, 2008, October 31, 2008, *The Daily Camera.*	The Honorable Shaun McGrath, Mayor, City of Boulder, P.O. Box 791, Boulder, CO 80306.	October 10, 2008	080024
Boulder (FEMA Docket No: B–1023).	Unincorporated areas of Boulder County (08–08–0701P).	October 24, 2008, October 31, 2008, *The Daily Camera.*	The Honorable Ben Pearlman, Chairman, Boulder County Board of Commissioners, P.O. Box 471, Boulder, CO 80306.	October 10, 2008	080023
Douglas (FEMA Docket No: B–1027).	Unincorporated areas of Douglas County (07–08–0862P).	February 14, 2008, February 21, 2008, *Douglas County News Press.*	The Honorable Steven A. Boand, Chairman, Douglas County Board of Commissioners, 100 Third Street, Castle Rock, CO 80104.	May 22, 2008	080049
Douglas (FEMA Docket No: B–1019).	Unincorporated areas of Douglas County (08–08–0553P).	October 2, 2008, October 9, 2008, *Douglas County News-Press.*	The Honorable Melanie A. Worley, Chairman, Douglas County Board of Commissioners, 100 Third Street, Castle Rock, CO 80104.	February 6, 2009	080049
Douglas (FEMA Docket No: B–1019).	Town of Parker (08–08–0553P).	October 2, 2008, October 9, 2008, *Douglas County News-Press.*	The Honorable David Casiano, Mayor, Town of Parker, 20120 East Main Street, Parker, CO 80138–7334.	February 6, 2009	080310
El Paso (FEMA Docket No: B–1019).	Unincorporated areas of El Paso County (08–08–0630P).	October 8, 2008, October 15, 2008, *El Paso County Advertiser.*	The Honorable Dennis Hisey, Chairman, El Paso County Board of Commissioners, 27 East Vermijo Avenue, Colorado Springs, CO 80903–2208.	September 24, 2008	080059
Delaware:					
Kent (FEMA Docket No: B–7788).	Unincorporated areas of Kent County (08–03–0601P).	May 21, 2008, May 28, 2008, *Dover Post.*	The Honorable P. Brooks Banta, President, Kent County, 555 Bay Road, Dover, DE 19901.	September 18, 2008	100001
Florida:					
Collier (FEMA Docket No: B–1005).	City of Marco Island (08–04–4259P).	August 14, 2008, August 21, 2008, *Naples Daily News.*	The Honorable William D. Trotter, Chairman, City Council, City of Marco Island, 50 Bald Eagle Drive, Marco Island, FL 34145.	July 31, 2008	120426
Collier (FEMA Docket No: B–1023).	City of Naples (08–04–4493P).	October 22, 2008, October 29, 2008, *Naples Daily News.*	The Honorable Bill Barnett, Mayor, City of Naples, 35 Eighth Street South, Naples, FL 34102.	October 15, 2008	125130
Lee (FEMA Docket No: B–1005).	Unincorporated areas of Lee County (08–04–2060P).	August 13, 2008, August 20, 2008, *Fort Meyer News Press.*	The Honorable Ray Judah, Chairman, Lee County Board of Commissioners, P.O. Box 398, Fort Myers, FL 33902.	August 29, 2008	125124

State and county	Location and Case No.	Date and name of newspaper where notice was published	Chief executive officer of community	Effective date of modification	Community No.
Miami-Dade (FEMA Docket No: B–1005).	City of Miami (08–04–2590P).	August 15, 2008, August 22, 2008, *Miami Herald*.	The Honorable Manuel A. Diaz, Mayor, City of Miami, 3500 Pan American Drive, Miami, FL 33133.	July 31, 2008	120650
Sarasota (FEMA Docket No: B–1011).	Unincorporated areas of Sarasota County (08–04–1962P).	September 12, 2008, September 19, 2008, *Sarasota Herald-Tribune*.	The Honorable Shannon Staub, Chair, Sarasota County Commission, 1660 Ringling Boulevard, Sarasota, FL 34236.	January 20, 2009	125144
Georgia:					
Barrow (FEMA Docket No: B–1005).	Unincorporated areas of Barrow County (08–04–3647P).	August 6, 2008, August 13, 2008, *The Barrow County News*.	The Honorable Douglas H. Garrison, Chairman, Barrow County, Board of Commissioners, 233 East Broad Street, Winder, GA 30680.	December 11, 2008	130497
Gwinnett (FEMA Docket No: B–1005).	City of Duluth (08–04–3497P).	August 14, 2008, August 21, 2008, *Gwinnett Daily Post*.	The Honorable Nancy Harris, Mayor, City of Duluth, 3167 Main Street, Duluth, GA 30096.	August 12, 2008	130098
Muscogee County Consolidated Government (FEMA Docket No: B–1005).	City of Columbus (08–04–4426P).	May 22, 2008, May 29, 2008, *Columbus Ledger-Enquirer*.	The Honorable Jim Wetherington, Mayor, City of Columbus—Muscogee County, Consolidated Government, P.O. Box 1340, Columbus, GA 31902.	August 27, 2008	135158
Illinois:					
Cook (FEMA Docket No: B–1019).	Unincorporated areas of Cook County (08–05–2074P).	October 14, 2008, October 21, 2008, *Southtown Star*.	The Honorable Todd H. Stroger, President, Cook County Board of Commissioners, 118 North Clark Street, Room 537, Chicago, IL 60602.	November 7, 2008	170054
Cook (FEMA Docket No: B–1019).	Village of Ford Heights (08–05–2074P).	October 14, 2008, October 21, 2008, *Southtown Star*.	The Honorable Saul L. Beck, Mayor, Village of Ford Heights, 1343 Ellis Avenue, Ford Heights, IL 60411.	November 7, 2008	170084
Cook (FEMA Docket No: B–1019).	Village of Sauk Village (08–05–2074P).	October 14, 2008, October 21, 2008, *Southtown Star*.	The Honorable Roger G. Peckham, Mayor, Village of Sauk Village, 21701 Torrence Avenue, Sauk Village, IL 60411.	November 7, 2008	170157
Dupage (FEMA Docket No: B–1019).	Village of Bensenville (08–05–0178P).	October 15, 2008, October 22, 2008, *Daily Herald*.	The Honorable John C. Geils, President, Village of Bensenville, 12 South Center Street, Bensenville, IL 60106.	September 29, 2008	170200
Dupage (FEMA Docket No: B–1019).	Village of Elk Grove (08–05–0178P).	October 15, 2008, October 22, 2008, *Daily Herald*.	The Honorable Craig B. Johnson, Mayor, Village of Elk Grove, 901 Wellington Avenue, Elk Grove Village, IL 60007.	September 29, 2008	170088
DuPage (FEMA Docket No: B–1011).	Village of Lisle (08–05–3888P).	September 16, 2008, September 23, 2008, *Daily Herald*.	The Honorable Joseph Broda, Mayor, Village of Lisle, 925 Burlington Avenue, Lisle, IL 60532.	January 21, 2009	170211
Lake (FEMA Docket No: B–1015).	City of Park City (08–05–3860P).	September 26, 2008, October 2, 2008, *Lake County News-Sun*.	The Honorable Steve Pannell, Mayor, City of Park City, 3420 Kehm Boulevard, Park City, IL 60085.	February 2, 2009	170386
Massachusetts:					
Essex (FEMA Docket No: B–1005).	City of Beverly (08–01–0002P).	August 13, 2008, August 20, 2008, *The Salem News*.	The Honorable William Scanlon, Jr., Mayor, City of Beverly, 191 Cabot Street, Beverly, MA 01915.	August 1, 2008	250077
Suffolk (FEMA Docket No: B–1001).	City of Boston (08–01–1020P).	July 24, 2008, July 31, 2008, *Boston Herald*.	The Honorable Thomas Menino, Mayor, City of Boston, One City Hall Square, Boston, MA 02201.	December 5, 2008	250286
Montana:					
Flathead (FEMA Docket No: B–1005).	Unincorporated areas of Flathead County (08–08–0149P).	August 15, 2008, August 22, 2008, *Daily Inter Lake*.	The Honorable Gary D. Hall, Chairman, Flathead County, Board of Commissioners, 800 South Main Street, Kalispell, MT 59901.	July 31, 2008	300023
Nevada:					
Clark (FEMA Docket No: B–1019).	Unincorporated areas of Clark County (08–09–0253P).	October 10, 2008, October 17, 2008, *Las Vegas Review Journal*.	The Honorable Rory Reid, Chair, Clark County Board of Commissioners, 500 South Grand Central Parkway, Las Vegas, NV 89106.	September 26, 2008	320003
Clark (FEMA Docket No: B–1019).	Unincorporated areas of Clark County (08–09–0919P).	October 10, 2008, October 17, 2008, *Las Vegas Review Journal*.	The Honorable Rory Reid, Chair, Clark County Board of Commissioners, 500 South Grand Central Parkway, Las Vegas, NV 89106.	September 30, 2008	320003
Oregon:					
Multnomah, Clackamas, and Washington (FEMA Docket No: B–1011).	City of Portland (08–10–0276P).	September 16, 2008, September 23, 2008, *Daily Journal of Commerce*.	The Honorable Tom Potter, Mayor, City of Portland, 1221 Southwest Fourth Avenue, Suite 340, Portland, OR 97204.	January 21, 2009	410183
Pennsylvania:					
York (FEMA Docket No: B–1019).	Township of Dover (08–03–1498P).	October 10, 2008, October 17, 2008, *York Daily Record*.	The Honorable Shane Patterson, Chairman, Board of Supervisors Dover Township, 2480 West Canal Road, Dover, PA 17315.	September 30, 2008	420920
South Carolina:					

State and county	Location and Case No.	Date and name of newspaper where notice was published	Chief executive officer of community	Effective date of modification	Community No.
Richland (FEMA Docket No: B–1005).	City of Columbia (08–04–0847P).	August 15, 2008, August 22, 2008, *The Columbia Star*.	The Honorable Robert D. Coble, Mayor, City of Columbia, P.O. Box 147, Columbia, SC 29217.	August 30, 2008	450172
Richland (FEMA Docket No: B–1005).	City of Forest Acres (08–04–0847P).	August 15, 2008, August 22, 2008, *The Columbia Star*.	The Honorable Frank Brunson, Mayor, City of Forest Acres, 5205 North Trenholm Road, Forest Acres, SC 29206.	August 30, 2008	450174
Richland (FEMA Docket No: B–1005).	Unincorporated areas of Richland County (08–04–2062P).	August 22, 2008, August 29, 2008, *The Columbia Star*.	The Honorable Joseph McEachern, Chairman, Richland County Council, Richland County Administrative Building, 2020 Hampton Street, Second Floor, Columbia, SC 29202.	July 31, 2008	450170
Tennessee:					
Williamson (FEMA Docket No: B–1027).	City of Spring Hill (07–04–6295P).	September 2, 2008, September 9, 2008, *The Daily Herald*.	The Honorable Danny M. Laverette, Mayor, City of Spring Hill, 199 Town Center Parkway, Spring Hill, TN 37174.	August 22, 2008	470278
Texas:					
Bexar (FEMA Docket No: B–1005).	Unincorporated areas of Bexar County (08–06–0467P).	August 1, 2008, August 8, 2008, *Daily Commercial Recorder*.	The Honorable Nelson W. Wolff, Bexar County Judge, 100 Dolorosa Street, Suite 1.20, San Antonio, TX 78205.	December 8, 2008	480035
Bexar (FEMA Docket No: B–1005).	City of San Antonio (08–06–0206P).	July 31, 2008, August 7, 2008, *San Antonio Express News*.	The Honorable Phil Hardberger, Mayor, City of San Antonio, P.O. Box 839966, San Antonio, TX 78283.	December 5, 2008	480045
Bexar (FEMA Docket No: B–1019).	City of San Antonio (08–06–1356P).	October 9, 2008, October 16, 2008, *San Antonio Express News*.	The Honorable Phil Hardberger, Mayor, City of San Antonio, P.O. Box 839966, San Antonio, TX 78283.	September 24, 2008	480045
Denton (FEMA Docket No: B–1005).	City of Denton (08–06–1636P).	August 13, 2008, August 20, 2008, *Denton Record-Chronicle*.	The Honorable Mark Burroughs, Mayor, City of Denton, 215 East Mckinney Street, Denton, TX 76201.	December 18, 2008	480194
Denton (FEMA Docket No: B–1005).	Unincorporated areas of Denton County (08–06–1636P).	August 13, 2008, August 20, 2008, *Denton Record-Chronicle*.	The Honorable Mary Horn, Denton County Judge, 110 West Hickory Street, 2nd Floor, Denton, TX 76201.	December 18, 2008	480774
Harris (FEMA Docket No: B–1005).	Unincorporated areas of Harris County (08–06–0268P).	August 18, 2008, August 25, 2008, *Houston Chronicle*.	The Honorable Ed Emmett, Harris County Judge, 1001 Preston Street, Suite 911, Houston, TX 77002.	December 23, 2008	480287
Kendall (FEMA Docket No: B–1023).	City of Boerne (08–06–1974P).	October 14, 2008, October 21, 2008, *The Boerne Star*.	The Honorable Dan Heckler, Mayor, City of Boerne, P.O. Box 1677, Boerne, TX 78006.	September 24, 2008	480418
Montgomery (FEMA Docket No: B–1015).	Unincorporated areas of Montgomery County (07–06–0641P).	September 23, 2008, September 30, 2008, *Conroe Courier*.	The Honorable Alan B. Sadler, Montgomery County Judge, 301 North Thompson Street, Suite 210, Conroe, TX 77301.	January 28, 2009	480483
Montgomery (FEMA Docket No: B–1015).	City of Panorama Village (07–06–0641P).	September 23, 2008, September 30, 2008, *Conroe Courier*.	The Honorable Howard Kravetz, Mayor, City of Panorama Village, 98 Hiwon Drive, Panorama Village, TX 77304.	January 28, 2009	481263
Tarrant (FEMA Docket No: B–1027).	City of Fort Worth (08–06–0062P).	August 21, 2008, August 28, 2008, *Fort Worth Star Telegram*.	The Honorable Mike J. Moncrief, Mayor, City of Fort Worth, 1000 Throckmorton Street, Fort Worth, TX 76102.	December 26, 2008	480596
Tarrant (FEMA Docket No: B–1027).	City of Fort Worth (07–06–1996P) (08–06–2520P).	August 21, 2008, August 28, 2008, *Fort Worth Star Telegram*.	The Honorable Mike J. Moncrief, Mayor, City of Fort Worth, 1000 Throckmorton Street, Fort Worth, TX 76102.	December 26, 2008	480596
Travis (FEMA Docket No: B–1011).	City of Austin (08–06–1041P).	September 16, 2008, September 23, 2008, *Austin American-Statesman*.	The Honorable Will Wynn, Mayor, City of Austin, P.O. Box 1088, Austin, TX 78767.	January 21, 2009	480624
Utah:					
Davis (FEMA Docket No: B–1005).	City of Kaysville (08–08–0369P).	August 21, 2008, August 28, 2008, *Standard Examiner*.	The Honorable Neka Roundy, Mayor, City of Kaysville, 23 East Center Street, Kaysville, UT 84037.	December 26, 2008	490046

(Catalog of Federal Domestic Assistance No. 97.022, ''Flood Insurance.'')

Dated: March 2, 2009.

Michael K. Buckley,

Acting Assistant Administrator, Mitigation Directorate, Department of Homeland Security, Federal Emergency Management Agency.

[FR Doc. E9–6584 Filed 3–24–09; 8:45 am]

BILLING CODE 9110–12–P

DEPARTMENT OF HOMELAND SECURITY

Federal Emergency Management Agency

44 CFR Part 65

[Docket ID FEMA–2008–0020; Internal Agency Docket No. FEMA–B–1036]

Changes in Flood Elevation Determinations

AGENCY: Federal Emergency Management Agency, DHS.

ACTION: Interim rule.

SUMMARY: This interim rule lists communities where modification of the Base (1 % annual-chance) Flood Elevations (BFEs) is appropriate because of new scientific or technical data. New flood insurance premium rates will be calculated from the modified BFEs for new buildings and their contents.

DATES: These modified BFEs are currently in effect on the dates listed in the table below and revise the Flood Insurance Rate Maps (FIRMs) in effect prior to this determination for the listed communities.

From the date of the second publication of these changes in a newspaper of local circulation, any person has ninety (90) days in which to request through the community that the Mitigation Assistant Administrator of FEMA reconsider the changes. The modified BFEs may be changed during the 90-day period.

ADDRESSES: The modified BFEs for each community are available for inspection at the office of the Chief Executive Officer of each community. The respective addresses are listed in the table below.

FOR FURTHER INFORMATION CONTACT: William R. Blanton, Jr., Engineering Management Branch, Mitigation Directorate, Federal Emergency Management Agency, 500 C Street, SW., Washington, DC 20472, (202) 646–3151.

SUPPLEMENTARY INFORMATION: The modified BFEs are not listed for each community in this interim rule. However, the address of the Chief Executive Officer of the community where the modified BFE determinations are available for inspection is provided.

Any request for reconsideration must be based on knowledge of changed conditions or new scientific or technical data.

The modifications are made pursuant to section 201 of the Flood Disaster Protection Act of 1973, 42 U.S.C. 4105, and are in accordance with the National Flood Insurance Act of 1968, 42 U.S.C. 4001 *et seq.,* and with 44 CFR part 65.

For rating purposes, the currently effective community number is shown and must be used for all new policies and renewals.

The modified BFEs are the basis for the floodplain management measures that the community is required to either adopt or to show evidence of being already in effect in order to qualify or to remain qualified for participation in the National Flood Insurance Program (NFIP).

These modified BFEs, together with the floodplain management criteria required by 44 CFR 60.3, are the minimum that are required. They should not be construed to mean that the community must change any existing ordinances that are more stringent in their floodplain management requirements. The community may at any time enact stricter requirements of its own, or pursuant to policies established by the other Federal, State, or regional entities. The changes BFEs are in accordance with 44 CFR 65.4.

National Environmental Policy Act. This interim rule is categorically excluded from the requirements of 44 CFR part 10, Environmental Consideration. An environmental impact assessment has not been prepared.

Regulatory Flexibility Act. As flood elevation determinations are not within the scope of the Regulatory Flexibility Act, 5 U.S.C. 601–612, a regulatory flexibility analysis is not required.

Regulatory Classification. This interim rule is not a significant regulatory action under the criteria of section 3(f) of Executive Order 12866 of September 30, 1993, Regulatory Planning and Review, 58 FR 51735.

Executive Order 13132, Federalism. This interim rule involves no policies that have federalism implications under Executive Order 13132, Federalism.

Executive Order 12988, Civil Justice Reform. This interim rule meets the applicable standards of Executive Order 12988.

List of Subjects in 44 CFR Part 65

Flood insurance, Floodplains, Reporting and recordkeeping requirements.

■ Accordingly, 44 CFR part 65 is amended to read as follows:

PART 65—[AMENDED]

■ 1. The authority citation for part 65 continues to read as follows:

Authority: 42 U.S.C. 4001 *et seq.*; Reorganization Plan No. 3 of 1978, 3 CFR, 1978 Comp., p. 329; E.O. 12127, 44 FR 19367, 3 CFR, 1979 Comp., p. 376.

§ 65.4 [Amended]

■ 2. The tables published under the authority of § 65.4 are amended as follows:

State and county	Location and case No.	Date and name of newspaper where notice was published	Chief executive officer of community	Effective date of modification	Community No.
Alabama: St. Clair	Town of Moody (08–04–4404P).	January 9, 2009; January 16, 2009; *The Birmingham News.*	The Honorable Joe Lee, Mayor, Town of Moody, 670 Park Avenue, Moody, AL 35004.	May 18, 2009	010187
Arizona:					
Maricopa	Unincorporated areas of Maricopa County (08–09–1420P).	December 25, 2008; January 1, 2009; *Arizona Business Gazette.*	The Honorable Andrew W. Kunasek, Chairman, Maricopa County, Board of Supervisors301 West Jefferson, 10th Floor, Phoenix, AZ 85003.	May 4, 2009	040037
Pinal	City of Apache Junction (08–09–1318P).	January 12, 2009; January 19, 2009; *Apache Junction News.*	The Honorable Douglas Coleman, Mayor, City of Apache Junction, 300 East Superstition Boulevard, Apache Junction, AZ 85219.	May 19, 2009	040120
California: Monterey	City of Salinas (08–09–1361P).	January 12, 2009; January 19, 2009; *The Salinas Californian.*	The Honorable Dennis Donohue, Mayor, City of Salinas, 200 Lincoln Avenue, Salinas, CA 93901.	May 19, 2009	060202

State and county	Location and case No.	Date and name of newspaper where notice was published	Chief executive officer of community	Effective date of modification	Community No.
Colorado: Jefferson	Unincorporated areas of Jefferson County (08–08–0667P).	January 7, 2009; January 14, 2009; *High Timber Times*.	The Honorable Kathy Hartman, Chairman, Jefferson County, Board of Commissioners, 100 Jefferson County Parkway, Golden, CO 80419–5550.	May 14, 2009	080087
Florida:					
Lake	Town of Lady Lake (08–04–5093P).	January 12, 2009; January 19, 2009; *The Villages Daily Sun*.	The Honorable Jim Richards, Mayor, Town of Lady Lake, 409 Fennell Boulevard, Lady Lake, FL 32159.	January 30, 2009	120613
Miami-Dade	City of Coral Gables (09–04–0251P).	January 12, 2009; January 20, 2009; *Miami Daily Business Review*.	The Honorable Don Slesnick, II, Mayor, City of Coral Gables, 405 Biltmore Way, Second Floor, Coral Gables, FL 33134.	December 31, 2008	120639
Georgia: Barrow	Unincorporated areas of Barrow County (08–04–5850P).	January 7, 2009; January 14, 2009; *The Barrow County News*.	Mr. Douglas H. Garrison, Chairman, Barrow County, Board of Commissioners, 233 East Broad Street, Winder, GA 30680.	May 14, 2009	130497
Illinois:					
DuPage	Unincorporated areas of DuPage County (08–05–0519P).	March 7, 2008; March 14, 2008; *Daily Herald*.	The Honorable Robert J. Schillerstorm, Chairman, DuPage County Board, 505 North County Farm Road, Wheaton, IL 60187.	July 14, 2008	170197
DuPage	City of Elmhurst (08–05–0519P).	March 7, 2008; March 14, 2008; *Daily Herald*.	The Honorable Thomas D. Marcucci, Mayor, City of Elmhurst, 209 North York Street, Elmhurst, IL 60126.	July 14, 2008	170205
Kansas: Pottawatomie.	Unincorporated areas of Pottawatomie County (08–07–1722P).	January 8, 2009; January 15, 2009; *The Wamego Times*.	The Honorable Corwin Seamans, Chairman, Pottawatomie County Commissioners, 207 North First Street, Westmoreland, KS 66549.	May 15, 2009	200621
Missouri: St. Charles	Unincorporated areas of St. Charles County (09–07–0032P).	January 12, 2009; January 19, 2009; *St. Charles County Business Record*.	The Honorable Steve Ehlmann, County Executive, St. Charles County, Administration Building, 201 North Second Street, St. Charles, MO 63301.	May 19, 2009	290315
New Jersey:					
Somerset	Borough of Bound Brook (09–02–0051P).	January 9, 2009; January 16, 2009; *Courier News*.	The Honorable Carey Pilato, Mayor, Borough of Bound Brook, 230 Hamilton Street, Bound Brook, NJ 08805.	December 24, 2008	340430
Somerset	Township of Bridgewater (09–02–0051P).	January 9, 2009; January 16, 2009; *Courier News*.	The Honorable Patricia Flannery, Mayor, Township of Bridgewater, P.O. Box 6300, Bridgewater, NJ 08807.	December 24, 2008	340432
North Carolina: Onslow.	City of Jacksonville (08–04–3999P).	December 23, 2008; December 30, 2008; *The Daily News*.	The Honorable Sammy Phillips, Mayor, City of Jacksonville, P.O. Box 128, Jacksonville, NC 28541.	January 14, 2009	370178
Oklahoma:					
Oklahoma	Town of Arcadia (08–06–2651P).	January 7, 2009; January 14, 2009; *The Oklahoman*.	The Honorable Marilyn Murrell, Mayor, Town of Arcadia, P.O. Box 268, Arcadia, OK 73004.	December 23, 2008	400551
Tulsa	City of Broken Arrow (08–06–2075P).	January 9, 2009; January 16, 2009; *Tulsa Daily Commerce & Legal News*.	The Honorable Wade McCaleb, Mayor, City of Broken Arrow, P.O. Box 610, Broken Arrow, OK 74013.	December 24, 2008	400236
Pennsylvania: Allegheny.	Municipality of Monroeville (09–03–0036P).	January 12, 2009; January 19, 2009; *Pittsburgh Post Gazette*.	The Honorable Gregory Rosenko, Mayor, Municipality of Monroeville, 2700 Monroeville Boulevard, Monroeville, PA 15146.	December 31, 2008	420054
Puerto Rico: Puerto Rico.	Commonwealth of Puerto Rico (08–02–1455P).	January 9, 2009; January 16, 2009; *Puerto Rico Daily Sun*.	The Honorable Anibal Acevedo-Vila, Governor, Commonwealth of Puerto Rico, P.O. Box 82, La Fortaleza, San Juan, PR 00901.	May 18, 2009	720000
Tennessee: Rutherford.	City of Murfreesboro (08–04–3762P).	January 11, 2009; January 18, 2009; *The Murfreesboro Post*.	The Honorable Tommy Bragg, Mayor, City of Murfreesboro, 111 West Vine Street, Murfreesboro, TN 37130.	May 18, 2009	470168
Texas:					
Bexar	City of San Antonio (08–06–0269P).	January 12, 2009; January 19, 2009; *San Antonio Express News*.	The Honorable Phil Hardberger, Mayor, City of San Antonio, P.O. Box 839966, San Antonio, TX 78283.	May 19, 2009	480045
Caldwell	Unincorporated areas of Caldwell County (07–06–2617P).	October 9, 2008; October 16, 2008; *Lockhart Post Register*.	The Honorable H.T. Wright, Caldwell County Judge, 110 South Main Street, Lockhart, TX 78644.	February 20, 2009	480094
Caldwell	Town of Martindale (07–06–2617P).	October 9, 2008; October 16, 2008; *Lockhart Post Register*.	The Honorable Patricia Peterson, Mayor, Town of Martindale, P.O. Box 365, Martindale, TX 78655.	February 20, 2009	481587
Dallas	City of Garland (08–06–0905P).	January 5, 2009; January 12, 2009; *Dallas Morning News*.	The Honorable Ronald E. Jones, Mayor, City of Garland, P.O. Box 469002, Garland, TX 75046–9002.	May 12, 2009	485471
Fort Bend	Fort Bend County M.U.D. #23 (08–06–2237P).	January 9, 2009; January 16, 2009; *Fort Bend Herald*.	The Honorable Ellen Hughes, Board President, Fort Bend County Municipal Utility District No. 23, 1715 Misty Fawn Lane, Fresno, TX 77545.	December 31, 2008	481590

State and county	Location and case No.	Date and name of newspaper where notice was published	Chief executive officer of community	Effective date of modification	Community No.
Guadalupe	Unincorporated areas of Guadalupe County (07–06–2617P).	October 16, 2008; October 23, 2008; *Seguin Gazette Enterprise*.	The Honorable Mike Wiggins, Guadalupe County Judge, 307 West Court Street, Seguin, Texas 78155.	February 20, 2009	480266
Harris	Unincorporated areas of Harris County (08–06–2044P).	January 9, 2009; January 16, 2009; *Houston Chronicle*.	The Honorable Ed Emmett, Harris County Judge, 1001 Preston Street, Suite 911, Houston, TX 77002.	January 30, 2009	480287
Hays	Unincorporated areas of Hays County (07–06–2617P).	October 16, 2008; October 23, 2008; *San Marcos Daily Record*.	The Honorable Liz Sumter, Hays County Judge, 111 East San Antonio Street, Suite 300, San Marcos, TX 78666.	February 20, 2009	480321
McLennan	Unincorporated areas of McLennan County (09–06–0208P).	January 9, 2009; January 16, 2009; *Waco Tribune-Herald*.	The Honorable Jim Lewis, McLennan County Judge, P.O. Box 1728, Waco, TX 76701.	May 18, 2009	480456
McLennan	City of Waco (09–06–0208P).	January 9, 2009; January 16, 2009; *Waco Tribune-Herald*.	The Honorable Virginia Dupuy, Mayor, City of Waco, P.O. Box 2570, Waco, TX 76702.	May 18, 2009	480461
Tarrant	Unincorporated areas of Tarrant County (08–06–1292P).	January 9, 2009; January 16, 2009; *Commercial Recorder*.	The Honorable B. Glen Whitley, Tarrant County Judge, 100 East Weatherford Street, Fort Worth, TX 76196.	May 18, 2009	480582

(Catalog of Federal Domestic Assistance No. 97.022, ''Flood Insurance.'')

Dated: February 6, 2009.

Michael K. Buckley,

Acting Assistant Administrator, Mitigation Directorate, Department of Homeland Security, Federal Emergency Management Agency.

[FR Doc. E9–6575 Filed 3–24–09; 8:45 am]

BILLING CODE 9110–12–P

DEPARTMENT OF HOMELAND SECURITY

Federal Emergency Management Agency

44 CFR Part 65

[Docket ID FEMA–2008–0020]

Changes in Flood Elevation Determinations

AGENCY: Federal Emergency Management Agency, DHS.

ACTION: Final rule.

SUMMARY: Modified Base (1% annual-chance) Flood Elevations (BFEs) are finalized for the communities listed below. These modified BFEs will be used to calculate flood insurance premium rates for new buildings and their contents.

DATES: The effective dates for these modified BFEs are indicated on the following table and revise the Flood Insurance Rate Maps (FIRMs) in effect for the listed communities prior to this date.

ADDRESSES: The modified BFEs for each community are available for inspection at the office of the Chief Executive Officer of each community. The respective addresses are listed in the table below.

FOR FURTHER INFORMATION CONTACT: William R. Blanton, Jr., Engineering Management Branch, Mitigation Directorate, Federal Emergency Management Agency, 500 C Street, SW., Washington, DC 20472, (202) 646–3151.

SUPPLEMENTARY INFORMATION: The Federal Emergency Management Agency (FEMA) makes the final determinations listed below of the modified BFEs for each community listed. These modified BFEs have been published in newspapers of local circulation and ninety (90) days have elapsed since that publication. The Mitigation Division Director of FEMA resolved any appeals resulting from this notification.

The modified BFEs are not listed for each community in this notice. However, this final rule includes the address of the Chief Executive Officer of the community where the modified BFEs determinations are available for inspection.

The modified BFEs are made pursuant to section 206 of the Flood Disaster Protection Act of 1973, 42 U.S.C. 4105, and are in accordance with the National Flood Insurance Act of 1968, 42 U.S.C. 4001 *et seq.,* and with 44 CFR part 65.

For rating purposes, the currently effective community number is shown and must be used for all new policies and renewals.

The modified BFEs are the basis for the floodplain management measures that the community is required to either adopt or to show evidence of being already in effect in order to qualify or to remain qualified for participation in the National Flood Insurance Program (NFIP).

These modified BFEs, together with the floodplain management criteria required by 44 CFR 60.3, are the minimum that are required. They should not be construed to mean that the community must change any existing ordinances that are more stringent in their floodplain management requirements. The community may at any time enact stricter requirements of its own, or pursuant to policies established by other Federal, State, or regional entities.

These modified BFEs are used to meet the floodplain management requirements of the NFIP and are also used to calculate the appropriate flood insurance premium rates for new buildings built after these elevations are made final, and for the contents in these buildings. The changes in BFEs are in accordance with 44 CFR 65.4.

National Environmental Policy Act. This final rule is categorically excluded from the requirements of 44 CFR part 10, Environmental Consideration. An environmental impact assessment has not been prepared.

Regulatory Flexibility Act. As flood elevation determinations are not within the scope of the Regulatory Flexibility Act, 5 U.S.C. 601–612, a regulatory flexibility analysis is not required.

Regulatory Classification. This final rule is not a significant regulatory action under the criteria of section 3(f) of Executive Order 12866 of September 30, 1993, Regulatory Planning and Review, 58 FR 51735.

Executive Order 13132, Federalism. This final rule involves no policies that have federalism implications under Executive Order 13132, Federalism.

Executive Order 12988, Civil Justice Reform. This final rule meets the

applicable standards of Executive Order 12988.

List of Subjects in 44 CFR Part 65

Flood insurance, Floodplains, Reporting and recordkeeping requirements.

■ Accordingly, 44 CFR part 65 is amended to read as follows:

PART 65—[AMENDED]

■ 1. The authority citation for part 65 continues to read as follows:

Authority: 42 U.S.C. 4001 *et seq.;* Reorganization Plan No. 3 of 1978, 3 CFR, 1978 Comp., p. 329; E.O. 12127, 44 FR 19367, 3 CFR, 1979 Comp., p.376.

§ 65.4 [Amended]

■ 2. The tables published under the authority of § 65.4 are amended as follows:

State and county	Location and Case No.	Date and name of newspaper where notice was published	Chief executive officer of community	Effective date of modification	Community No.
Arizona: Cochise (FEMA Docket No: B–1005).	Unincorporated areas of Cochise County (06–09–B939P).	July 31, 2008, August 7, 2008, *Sierra Vista Herald*.	The Honorable Richard Searle, Chairman, Cochise County Board of Supervisors, 1415 West Melody Lane, Building G, Bisbee, AZ 85603.	September 2, 2008 ...	040012
Arizona: Cochise (FEMA Docket No: B–1005).	City of Sierra Vista (06–09–B939P).	July 31, 2008, August 7, 2008, *Sierra Vista Herald*.	The Honorable Bob Strain, Mayor, City of Sierra Vista, 1011 North Coronado Drive, Sierra Vista, AZ 85635.	September 2, 2008 ...	040017
Arizona: Pima (FEMA Docket No: B–1005).	Unincorporated areas of Pima County (08–09–0454P).	August 7, 2008, August 14, 2008, *The Daily Territorial*.	The Honorable Richard Elias, Chairman, Pima County Board of Supervisors, 130 West Congress, 11th Floor, Tucson, AZ 85701.	July 21, 2008	040073
Arizona: Pima (FEMA Docket No: B–1005).	City of Tucson (08–09–0454P).	August 7, 2008, August 14, 2008, *The Daily Territorial*.	The Honorable Bob Walkup, Mayor, City of Tucson, P.O. Box 27210, Tucson, AZ 85726.	July 21, 2008	040076
Arizona: Santa Cruz (FEMA Docket No: B–1011).	Unincorporated areas of Santa Cruz County (07–09–1052P).	September 5, 2008, September 12, 2008, *Nogales International*.	The Honorable Manny Ruiz, Chairman, Santa Cruz County Board of Supervisors, 2150 North Congress Drive, Nogales, AZ 85621.	January 12, 2009	040090
Arizona: Yavapai (FEMA Docket No: B–1011).	Unincorporated areas of Yavapai County (08–09–1638P).	September 17, 2008, September 24, 2008, *Prescott Daily Courier*.	The Honorable Chip Davis, Chairman, Yavapai County Board of Supervisors, 1015 Fair Street, Prescott, AZ 86305.	October 6, 2008	040093
California: San Bernadino (FEMA Docket No: B–1027).	City of San Bernadino (07–09–1656P).	February 14, 2008, February 21, 2008, *San Bernadino County Sun*.	The Honorable Patrick J. Morris, Mayor, City of San Bernadino, 300 North "D" Street, San Bernardino, CA 92418.	January 31, 2008	060281
California: San Diego (FEMA Docket No: B–1008).	Unincorporated areas of San Diego County (08–09–0782P).	August 18, 2008, August 25, 2008, *San Diego Union-Tribune*.	The Honorable Greg Cox, Chairman, San Diego County Board of Supervisors, 1600 Pacific Highway, Room 335, San Diego, CA 92101.	December 23, 2008 ..	060284
Colorado: Douglas (FEMA Docket No: B–1015).	Unincorporated areas of Douglas County (08–08–0334P).	September 4, 2008, September 11, 2008, *Douglas County News-Press*.	The Honorable Melanie A. Worley, Chair, Douglas County Board of Commissioners, 100 Third Street, Castle Rock, CO 80104.	January 9, 2008	080049
Colorado: Douglas (FEMA Docket No: B–1015).	Unincorporated areas of Douglas County (08–08–0607P).	September 4, 2008, September 11, 2008, *Douglas County News-Press*.	The Honorable Melanie A. Worley, Chairman, Douglas County Board of Commissioners, 100 Third Street, Castle Rock, CO 80104.	August 21, 2008	080049
Colorado: Douglas (FEMA Docket No: B–1015).	Town of Parker (08–08–0334P).	September 4, 2008, September 11, 2008, *Douglas County News-Press*.	The Honorable David Casiano, Mayor, Town of Parker, 20120 East Main Street, Parker, CO 80138–7334.	January 9, 2008	080310
Colorado: El Paso (FEMA Docket No: B–1008).	City of Colorado Springs (07–08–0958P).	September 2, 2008, September 9, 2008, *The Gazette*.	The Honorable Lionel Rivera, Mayor, City of Colorado Springs, P.O. Box 1575, Colorado Springs, CO 80901.	August 15, 2008	080060
Florida: Dixie (FEMA Docket No: B–1027).	Town of Horseshoe Beach (08–04–0954P) (08–04–2115X).	January 31, 2008, February 7, 2008, *Dixie County Advocate*.	The Honorable George T. Kight, Mayor, Town of Horseshoe Beach, P.O. Box 86, Horseshoe Beach, FL 32648.	March 19, 2008	120326
Georgia: Athens-Clarke (FEMA Docket No: B–1011).	Unincorporated areas of Athens-Clarke County (08–04–4142P).	September 12, 2008, September 19, 2008, *Athens Banner Herald*.	The Honorable Heidi Davison, Mayor, Athens-Clarke County, 235 Wells Drive, Athens, GA 30606.	August 29, 2008	130040
Georgia: DeKalb (FEMA Docket No: B–1011).	Unincorporated areas of DeKalb County (08–04–3686P).	September 18, 2008, September 25, 2008, *The Champion*.	The Honorable Vernon Jones, Chief Executive Officer, DeKalb County, 1300 Commerce Drive, Decatur, GA 30030.	August 29, 2008	130065
Georgia: Muscogee County Consolidated Government (FEMA Docket No: B–1023).	City of Columbus—Muscogee County Consolidated Government (08–04–3155P).	May 21, 2008, May 29, 2008, *The Columbus Times*.	The Honorable Jim Wetherington, Mayor, City of Columbus—Muscogee County Consolidated Government, P.O. Box 1340, Columbus, GA 31902.	August 25, 2008	135158
Hawaii: Honolulu (FEMA Docket No: B–1027).	City and County of Honolulu (08–09–0558P).	July 14, 2008, July 21, 2008, *Honolulu Star Bulletin*.	The Honorable Mufi Hannemann, Mayor, City and County of Honolulu, 530 South King Street, Room 300, Honolulu, HI 96813.	November 18, 2008 ..	150001
Idaho: Blaine (FEMA Docket No: B–1011).	Unincorporated areas of Blaine County (08–10–0169P).	September 17, 2008, September 24, 2008, *Idaho Mountain Express*.	The Honorable Tom Bowman, Chairman, Blaine County Board of Commissioners, 206 First Street South Suite 300, Hailey, ID 83333.	August 29, 2008	165167
Illinois: Will (FEMA Docket No: B–1005).	Village of Shorewood (08–05–1099P).	August 12, 2008, August 19, 2008, *The Herald News*.	The Honorable Richard E. Chapman, Village President, Village of Shorewood, One Towne Center Boulevard, Shorewood, IL 60404.	July 31, 2008	170712

State and county	Location and Case No.	Date and name of newspaper where notice was published	Chief executive officer of community	Effective date of modification	Community No.
Maine: Lincoln (FEMA Docket No: B–1015).	Town of Southport (08–01–0451P).	September 18, 2008, September 25, 2008, *Boothbay Register*.	The Honorable Gerald Gamage, First Selectman, Town of Southport, P.O. Box 149, Southport, ME 04576.	August 26, 2008	230221
Maine: Waldo (FEMA Docket No: B–1019).	Town of Lincolnville (08–01–0911P).	September 18, 2008, September 25, 2008, *The Republican Journal*.	The Honorable Rosendel Gerry, Selectman, Town of Lincolnville, 493 Hope Road, Lincolnville, ME 04849.	August 29, 2008	230172
Massachusetts: Worcester (FEMA Docket No: B–1015).	Town of Westborough (08–01–0865P).	September 16, 2008, September 23, 2008, *Worcester Telegram & Gazette*.	The Honorable George Thompson, Chairman, Town of Westborough, Board of Selectmen, 34 West Main Street, Westborough, MA 01581.	September 26, 2008	250344
Mississippi: Madison (FEMA Docket No: B–1019).	Unincorporated areas of Madison County (07–04–5199P).	August 14, 2008, August 21, 2008, *Madison County Journal*.	The Honorable Timothy L. Johnson, President, Madison County Board of Supervisors, P.O. Box 608, Canton, MS 39046.	December 22, 2008 ..	280228
Nevada: Clark (FEMA Docket No: B–1015).	Unincorporated areas of Clark County (07–09–0831P).	September 23, 2008, September 30, 2008, *Las Vegas Review-Journal*.	The Honorable Rory Reid, Chair, Clark County Board of Commissioners, 500 South Grand Central Parkway, Las Vegas, NV 89106.	October 14, 2008	320003
New Jersey: Passaic (FEMA Docket No: B–1023).	Township of Little Falls (08–02–0616P).	April 4, 2008, April 11, 2008, *Herald News*.	The Honorable Eugene Kulick, Mayor, Township of Little Falls, 225 Main Street, Little Falls, NJ 07424.	August 11, 2008	340401
New Mexico: Dona Ana (FEMA Docket No: B–1011).	City of Las Cruces (08–06–1760P).	September 5, 2008, September 12, 2008, *Las Cruces Bulletin*.	The Honorable Ken Miyagishima, Mayor, City of Las Cruces, P.O. Box 20000, Las Cruces, NM 88004.	August 25, 2008	355332
North Carolina: Alamance (FEMA Docket No. B–1005).	City of Burlington (07–04–6274P).	August 8, 2008, August 15, 2008, *The Times-News*.	The Honorable Ronnie K. Wall, Mayor, City of Burlington, Municipal Building, P.O. Box 1358, 425 South Lexington Avenue, Burlington, NC 27216.	December 15, 2008 ..	370002
North Carolina: Orange (FEMA Docket No.: B–1011).	Orange County (Unincorporated Areas) (08–04–1666P).	August 15, 2008, August 22, 2008, *Chapel Hill Herald*.	Mr. Barry Jacobs, Chair, Board of Commissioners, Orange County, 2105 Moorefields Road, Hillsborough, North Carolina 27278.	December 22, 2008 ..	370342
Ohio: Franklin (FEMA Docket No: B–1011).	City of Columbus (07–05–3141P).	August 21, 2008, August 28, 2008, *The Columbus Dispatch*.	The Honorable Michael B. Coleman, Mayor, City of Columbus, 90 West Broad Street, Columbus, OH 43215.	December 26, 2008 ..	390170
Ohio: Franklin (FEMA Docket No: B–1011).	Unincorporated areas of Franklin County (07–05–3141P).	August 21, 2008, August 28, 2008, *The Columbus Dispatch*.	The Honorable Mary Jo Kilroy, President, Franklin County Board of Commissioners, 373 South High Street, 26th Floor, Columbus, OH 43215.	December 26, 2008 ..	390167
Ohio: Franklin (FEMA Docket No: B–1011).	City of Grove City (07–05–3141P).	August 21, 2008, August 28, 2008, *The Columbus Dispatch*.	The Honorable Richard L. Stage, Mayor, City of Grove City, 4035 Broadway Street, Grove City, OH 43123.	December 26, 2008 ..	390173
Oklahoma: Carter (FEMA Docket No: B–1027).	City of Ardmore (08–06–1238P).	July 17, 2008, July 24, 2008, *Daily Ardmoreite*.	The Honorable Martin Dyer, Mayor, City of Ardmore, P.O. Box 249, Ardmore, OK 73402.	November 21, 2008 ..	400031
South Carolina: Sumter (FEMA Docket No: B–1015).	Unincorporated areas of Sumter County (08–04–5092P).	September 10, 2008, September 17, 2008, *The Item*.	The Honorable William T. Noonan, Sumter County Administrator, 13 East Canal Street, Sumter, SC 29150.	January 15, 2009	450182
Tennessee: Knox (FEMA Docket No: B–1005).	Unincorporated areas of Knox County (08–04–3371P).	August 13, 2008, August 20, 2008, *The Knoxville News-Sentinel*.	The Honorable Mike Ragsdale, Mayor, Knox County, 400 Main Street, Suite 615, Knoxville, TN 37902.	September 2, 2008 ...	475433
Texas: Bexar (FEMA Docket No: B–1011).	City of San Antonio (07–06–2565P).	September 5, 2008, September 12, 2008, *San Antonio Express News*.	The Honorable Phil Hardberger, Mayor, City of San Antonio, P.O. Box 839966, San Antonio, TX 78283.	January 12, 2009	480045
Texas: Collin (FEMA Docket No: B–1011).	Town of Prosper (08–06–0479P).	September 11, 2008, September 18, 2008, *Dallas Morning News*.	The Honorable Charles Niswanger, Mayor, Town of Prosper, P.O. Box 307, Prosper, TX 75078.	August 29, 2008	480141
Texas: Dallas (FEMA Docket No: B–1005).	City of Desoto (08–06–0205P).	August 1, 2008, August 8, 2008, *Focus Daily News*.	The Honorable Bobby Waddle, Mayor, City of Desoto, 211 East Pleasant Run Road, Desoto, TX 75115.	November 28, 2008 ..	480172
Texas: Guadalupe (FEMA Docket No: B–1008).	City of Cibolo (08–06–0784P).	August 20, 2008, August 27, 2008, *Seguin Gazette-Enterprise*.	The Honorable Jennifer Hartman, Mayor, City of Cibolo, P.O. Box 826, Cibolo, TX 78108–0826.	December 26, 2008 ..	480267
Texas: Palo Pinto and Parker (FEMA Docket No: B–1008).	City of Mineral Wells (08–06–2504P).	September 2, 2008, September 9, 2008, *Mineral Wells Index*.	The Honorable Clarence Holliman, Mayor, City of Mineral Wells, 115 Southwest First Street, Mineral Wells, TX 76067.	January 7, 2009	480517
Texas: Tarrant and Denton (FEMA Docket No: B–1011).	City of Fort Worth (08–06–2456P).	September 5, 2008, September 12, 2008, *Fort Worth Star-Telegram*.	The Honorable Mike J. Moncrief, Mayor, City of Fort Worth, 1000 Throckmorton Street, Fort Worth, TX 76102.	August 19, 2008	480596
Texas: Tarrant (FEMA Docket No: B–1027).	City of Arlington (07–06–0980P).	March 6, 2008, March 13, 2008, *Star Telegram*.	The Honorable Robert Cluck, M.D., Mayor, City of Arlington, 101 West Abram Street, Arlington, TX 76004–0231.	July 11, 2008	485454
Texas: Tarrant (FEMA Docket No: B–1011).	City of Fort Worth (07–06–0534P).	September 5, 2008, September 12, 2008, *Fort Worth Star Telegram*.	The Honorable Mike J. Moncrief, Mayor, City of Fort Worth, 1000 Throckmorton Street, Fort Worth, TX 76102.	January 12, 2009	480596
Texas: Tarrant (FEMA Docket No: B–1027).	City of Fort Worth (07–06–0931P).	May 1, 2008, May 8, 2008, *Fort Worth Star Telegram*.	The Honorable Mike J Moncrief, Mayor, City of Fort Worth, 1000 Throckmorton Street, Fort Worth, TX 76102.	April 28, 2008	480596
Texas: Tarrant (FEMA Docket No: B–1027).	City of Fort Worth (08–06–0542P).	May 1, 2008, May 8, 2008, *Fort Worth Star Telegram*.	The Honorable Mike J Moncrief, Mayor, City of Fort Worth, 1000 Throckmorton Street, Fort Worth, TX 76102.	September 11, 2008	480596

State and county	Location and Case No.	Date and name of newspaper where notice was published	Chief executive officer of community	Effective date of modification	Community No.
Texas: Tarrant (FEMA Docket No: B–1027).	City of Fort Worth (08–06–1494P).	July 24, 2008, July 31, 2008, *Fort Worth Star Telegram*.	The Honorable Mike J Moncrief, Mayor, City of Fort Worth, 1000 Throckmorton Street, Fort Worth, TX 76102.	November 21, 2008 ..	480596
Texas: Tarrant (FEMA Docket No: B–1027).	Unincorporated areas of Tarrant County (08–06–0542P).	May 1, 2008, May 8, 2008, *Fort Worth Star Telegram*.	The Honorable B. Glen Whitley, Tarrant County Judge, 100 East Weatherford Street, Suite 501, Fort Worth, TX 76196.	September 11, 2008	480582
Texas: Tarrant (FEMA Docket No: B–1027).	Unincorporated areas of Tarrant County (08–06–1494P).	July 24, 2008, July 31, 2008, *Fort Worth Star Telegram*.	The Honorable Glen Whitley, Tarrant County Judge, 100 East Weatherford, Suite 501, Fort Worth, TX 76196.	November 21, 2008 ..	480582
Texas: Webb (FEMA Docket No: B–1023).	City of Laredo (08–06–0322P).	July 4, 2008, July 11, 2008, *Laredo Morning Times*.	The Honorable Raul G. Salinas, Mayor, City of Laredo, 1110 Houston Street, Laredo, TX 78040.	November 10, 2008 ..	480651
Utah: Washington (FEMA Docket No: B–1023).	City of St. George (08–08–0509P).	July 3, 2008, July 10, 2008, *The Spectrum*.	The Honorable Daniel D. McArthur, Mayor, City of St. George, 175 East 200 North, St. George, UT 84770.	November 7, 2008	490177
Virginia: Fauquier (FEMA Docket No: B–1005).	Unincorporated areas of Fauquier County (08–03–0544P).	August 13, 2008, August 20, 2008, *Fauquier Times Democrat*.	The Honorable Chester Stribling, Chairman, Board of Supervisors, Fauquier County, 10 Hotel Street, Warrenton, VA 20186.	July 31, 2008	510055
Virginia: Roanoke (FEMA Docket No: B–1008).	Unincorporated areas of Roanoke County (08–03–0782P).	August 15, 2008, August 22, 2008, *The Roanoke Times*.	The Honorable Richard Flora, Chairman, Roanoke County Board of Supervisors, P.O. Box 29800, Roanoke, VA 24018.	December 22, 2008 ..	510190
Washington: King (FEMA Docket No: B–1011).	City of Burien (07–10–0686P).	September 8, 2008, September 15, 2008, *The Seattle Times*.	The Honorable Joan McGilton, Mayor, City of Burien, 15811 Ambaum Boulevard Southwest, Suite C, Burien, WA 98168.	January 13, 2009	530321

(Catalog of Federal Domestic Assistance No. 97.022, ''Flood Insurance.'')

Dated: February 6, 2009.

Michael K. Buckley,

Acting Assistant Administrator, Mitigation Directorate, Department of Homeland Security, Federal Emergency Management Agency.

[FR Doc. E9–6579 Filed 3–24–09; 8:45 am]

BILLING CODE 9110–12–P

DEPARTMENT OF HOMELAND SECURITY

Federal Emergency Management Agency

44 CFR Part 65

[Docket ID FEMA–2008–0020; Internal Agency Docket No. FEMA–B–1039]

Changes in Flood Elevation Determinations

AGENCY: Federal Emergency Management Agency, DHS.

ACTION: Interim rule.

SUMMARY: This interim rule lists communities where modification of the Base (1% annual-chance) Flood Elevations (BFEs) is appropriate because of new scientific or technical data. New flood insurance premium rates will be calculated from the modified BFEs for new buildings and their contents.

DATES: These modified BFEs are currently in effect on the dates listed in the table below and revise the Flood Insurance Rate Maps (FIRMs) in effect prior to this determination for the listed communities.

From the date of the second publication of these changes in a newspaper of local circulation, any person has ninety (90) days in which to request through the community that the Mitigation Assistant Administrator of FEMA reconsider the changes. The modified BFEs may be changed during the 90-day period.

ADDRESSES: The modified BFEs for each community are available for inspection at the office of the Chief Executive Officer of each community. The respective addresses are listed in the table below.

FOR FURTHER INFORMATION CONTACT: William R. Blanton, Jr., Engineering Management Branch, Mitigation Directorate, Federal Emergency Management Agency, 500 C Street SW., Washington, DC 20472, (202) 646–3151.

SUPPLEMENTARY INFORMATION: The modified BFEs are not listed for each community in this interim rule. However, the address of the Chief Executive Officer of the community where the modified BFE determinations are available for inspection is provided.

Any request for reconsideration must be based on knowledge of changed conditions or new scientific or technical data.

The modifications are made pursuant to section 201 of the Flood Disaster Protection Act of 1973, 42 U.S.C. 4105, and are in accordance with the National Flood Insurance Act of 1968, 42 U.S.C. 4001 *et seq.*, and with 44 CFR part 65.

For rating purposes, the currently effective community number is shown and must be used for all new policies and renewals.

The modified BFEs are the basis for the floodplain management measures that the community is required to either adopt or to show evidence of being already in effect in order to qualify or to remain qualified for participation in the National Flood Insurance Program (NFIP).

These modified BFEs, together with the floodplain management criteria required by 44 CFR 60.3, are the minimum that are required. They should not be construed to mean that the community must change any existing ordinances that are more stringent in their floodplain management requirements. The community may at any time enact stricter requirements of its own, or pursuant to policies established by the other Federal, State, or regional entities. The changes BFEs are in accordance with 44 CFR 65.4.

National Environmental Policy Act. This interim rule is categorically excluded from the requirements of 44 CFR part 10, Environmental Consideration. An environmental impact assessment has not been prepared.

Regulatory Flexibility Act. As flood elevation determinations are not within the scope of the Regulatory Flexibility Act, 5 U.S.C. 601–612, a regulatory flexibility analysis is not required.

Regulatory Classification. This interim rule is not a significant regulatory action under the criteria of section 3(f) of Executive Order 12866 of September 30, 1993, Regulatory Planning and Review, 58 FR 51735.

Executive Order 13132, Federalism. This interim rule involves no policies

that have federalism implications under Executive Order 13132, Federalism.

Executive Order 12988, Civil Justice Reform. This interim rule meets the applicable standards of Executive Order 12988.

List of Subjects in 44 CFR Part 65

Flood insurance, Floodplains, Reporting and recordkeeping requirements.

■ Accordingly, 44 CFR part 65 is amended to read as follows:

PART 65—[AMENDED]

■ 1. The authority citation for part 65 continues to read as follows:

Authority: 42 U.S.C. 4001 *et seq.*; Reorganization Plan No. 3 of 1978, 3 CFR, 1978 Comp., p. 329; E.O. 12127, 44 FR 19367, 3 CFR, 1979 Comp., p. 376.

§ 65.4 [Amended]

■ 2. The tables published under the authority of § 65.4 are amended as follows:

State and county	Location and Case No.	Date and name of newspaper where notice was published	Chief executive officer of community	Effective date of modification	Community No.
Arizona:					
Maricopa	Unincorporated areas of Maricopa County (09–09–0381P).	January 8, 2009; January 15, 2009; *Arizona Business Gazette*.	The Honorable Andrew W. Kunasek, Chairman, Maricopa County Board of Supervisors, 301 West Jefferson Street, 10th Floor, Phoenix, AZ 85003.	May 15, 2009	040037
Maricopa	City of Tolleson (09–09–0381P).	January 8, 2009; January 15, 2009; *Arizona Business Gazette*.	The Honorable Charles P. Hayes, Mayor, City of Tolleson, 9555 West Van Buren Street, Tolleson, AZ 85353.	May 15, 2009	040055
California:					
Riverside	City of La Quinta (08–09–0307P).	January 10, 2008; January 17, 2008; *The Press Enterprise*.	The Honorable Donald Adolph, Mayor, City of La Quinta, P.O. Box 1504, La Quinta, CA 92247.	December 18, 2007	060709
San Diego	City of San Diego (08–09–1767P).	January 23, 2009; January 30, 2009; *San Diego Transcript*.	The Honorable Jerry Sanders, Mayor, City of San Diego, 202 C Street, 11th Floor, San Diego, CA 92101.	June 2, 2009	060295
Colorado:					
Denver	City and County of Denver (08–08–0948P).	December 17, 2008; December 24, 2008; *Rocky Mountain News*.	The Honorable John W. Hickenlooper, Mayor, City and County of Denver, 1437 Bannock Street, Suite 350, Denver, CO 80202.	December 9, 2008	080046
Indiana: Hamilton	Town of Fishers (08–05–0876P).	January 22, 2009; January 29, 2009; *Noblesville Ledger*.	The Honorable Christine Altman, Hamilton County Board of Commissioners, One Hamilton County Square, Noblesville, IN 46060.	January 13, 2009	180423
Missouri: Phelps	City of Rolla (08–07–0803P).	October 10, 2008; October 16, 2008; *Rolla Daily News*.	The Honorable William Jenks III, Mayor, City of Rolla, P.O. Box 979, Rolla, MO 65401.	February 20, 2009	290285
North Carolina: Iredell.	Iredell County (Unincorporated Areas) (08–04–2756P).	January 7, 2009; January 14, 2009; *Statesville Record & Landmark*.	Mr. Joel Mashburn, Manager, Iredell County, P.O. Box 788, Statesville, NC 28687.	May 14, 2009	370313
Ohio: Montgomery	Unincorporated areas of Montgomery County (08–05–2057P).	July 23, 2008; July 30, 2008; *Englewood Independent*.	The Honorable Deborah A. Lieberman, County Commissioner, 451 West Third Street, 11th Floor, Dayton, OH 45422.	November 27, 2008	390775
Tennessee: Wilson	City of Mount Juliet (08–04–4369P).	January 9, 2009; January 16, 2009; *Lebanon Democrat*.	The Honorable Linda C. Elam, Mayor, City of Mt. Juliet, P.O. Box 256, Mt. Juliet, TN 37121.	May 18, 2009	470290
Texas:					
Ellis	City of Waxahachie (08–06–1778P).	October 1, 2008; October 8, 2008; *Waxahachie Daily Light*.	The Honorable Ron Wilkinson, Mayor, City of Waxahachie, P.O. Box 757, Waxahachie, TX 75168–0757.	February 5, 2009	480211
Hays	City of Buda (07–06–1994P re-issues 0.6–06–B986P).	May 9, 2007; May 16, 2007; *Hays County Free Press*.	The Honorable John Trube, Mayor, City of Buda, P. O. Box 1218, Buda, TX 78610.	August 15, 2007	481640
Hays	Unincorporated areas of Hays County (07–06–1994P re-issues 0.6–06–B986P).	May 9, 2007; May 16, 2007; *Hays County Free Press*.	The Honorable Jim Powers, Hays County Judge, 111 East San Antonio Street, Suite 300, San Marcos, TX 78666.	August 15, 2007	480321

(Catalog of Federal Domestic Assistance No. 97.022, ''Flood Insurance.'')

Dated: February 25, 2009.

Michael K. Buckley,

Acting Assistant Administrator, Mitigation Directorate, Department of Homeland Security, Federal Emergency Management Agency.

[FR Doc. E9–6676 Filed 3–24–09; 8:45 am]

BILLING CODE 9110–12–P

DEPARTMENT OF HOMELAND SECURITY

Federal Emergency Management Agency

44 CFR Part 65

[Docket ID FEMA–2008–0020; Internal Agency Docket No. FEMA–B–1042]

Changes in Flood Elevation Determinations

AGENCY: Federal Emergency Management Agency, DHS.

ACTION: Interim rule.

SUMMARY: This interim rule lists communities where modification of the Base (1% annual-chance) Flood Elevations (BFEs) is appropriate because of new scientific or technical data. New flood insurance premium rates will be calculated from the modified BFEs for new buildings and their contents.

DATES: These modified BFEs are currently in effect on the dates listed in the table below and revise the Flood Insurance Rate Maps (FIRMs) in effect prior to this determination for the listed communities.

From the date of the second publication of these changes in a newspaper of local circulation, any person has ninety (90) days in which to request through the community that the Mitigation Assistant Administrator of FEMA reconsider the changes. The modified BFEs may be changed during the 90-day period.

ADDRESSES: The modified BFEs for each community are available for inspection at the office of the Chief Executive Officer of each community. The respective addresses are listed in the table below.

FOR FURTHER INFORMATION CONTACT: William R. Blanton, Jr., Engineering Management Branch, Mitigation Directorate, Federal Emergency Management Agency, 500 C Street, SW., Washington, DC 20472, (202) 646–3151.

SUPPLEMENTARY INFORMATION: The modified BFEs are not listed for each community in this interim rule. However, the address of the Chief Executive Officer of the community where the modified BFE determinations are available for inspection is provided.

Any request for reconsideration must be based on knowledge of changed conditions or new scientific or technical data.

The modifications are made pursuant to section 201 of the Flood Disaster Protection Act of 1973, 42 U.S.C. 4105, and are in accordance with the National Flood Insurance Act of 1968, 42 U.S.C. 4001 *et seq.*, and with 44 CFR part 65.

For rating purposes, the currently effective community number is shown and must be used for all new policies and renewals.

The modified BFEs are the basis for the floodplain management measures that the community is required to either adopt or to show evidence of being already in effect in order to qualify or to remain qualified for participation in the National Flood Insurance Program (NFIP).

These modified BFEs, together with the floodplain management criteria required by 44 CFR 60.3, are the minimum that are required. They should not be construed to mean that the community must change any existing ordinances that are more stringent in their floodplain management requirements. The community may at any time enact stricter requirements of its own, or pursuant to policies established by the other Federal, State, or regional entities. The changes BFEs are in accordance with 44 CFR 65.4.

National Environmental Policy Act. This interim rule is categorically excluded from the requirements of 44 CFR part 10, Environmental Consideration. An environmental impact assessment has not been prepared.

Regulatory Flexibility Act. As flood elevation determinations are not within the scope of the Regulatory Flexibility Act, 5 U.S.C. 601–612, a regulatory flexibility analysis is not required.

Regulatory Classification. This interim rule is not a significant regulatory action under the criteria of section 3(f) of Executive Order 12866 of September 30, 1993, Regulatory Planning and Review, 58 FR 51735.

Executive Order 13132, Federalism. This interim rule involves no policies that have federalism implications under Executive Order 13132, Federalism.

Executive Order 12988, Civil Justice Reform. This interim rule meets the applicable standards of Executive Order 12988.

List of Subjects in 44 CFR Part 65

Flood insurance, Floodplains, Reporting and recordkeeping requirements.

■ Accordingly, 44 CFR part 65 is amended to read as follows:

PART 65—[AMENDED]

■ 1. The authority citation for part 65 continues to read as follows:

Authority: 42 U.S.C. 4001 *et seq.*; Reorganization Plan No. 3 of 1978, 3 CFR, 1978 Comp., p. 329; E.O. 12127, 44 FR 19367, 3 CFR, 1979 Comp., p. 376.

§ 65.4 [Amended]

■ 2. The tables published under the authority of § 65.4 are amended as follows:

State and county	Location and case No.	Date and name of newspaper where notice was published	Chief executive officer of community	Effective date of modification	Community No.
Alabama: Madison	Unincorporated areas of Madison County (09–04–0502P).	February 6, 2009; February 13, 2009; *Madison County Record.*	The Honorable Mike Gillespie, Chairman, Madison County Commission, 6994 Courthouse 700, 100 Northside Square, Huntsville, AL 35801.	June 15, 2009	010151
Arkansas: Craighead	City of Jonesboro (07–06–2616P).	August 11, 2008; August 18, 2008; *The Jonesboro Sun.*	The Honorable Doug Forman, Mayor, City of Jonesboro, 515 West Washington Avenue, Jonesboro, AR 72401.	December 16, 2008	050048
Colorado:					
Boulder	City of Boulder (08–08–0790P).	February 6, 2009; February 13, 2009; *The Daily Camera.*	The Honorable Shaun McGrath, Mayor, City of Boulder, P.O. Box 791, Boulder, CO 80306.	January 28, 2009	080024
Boulder	Unincorporated areas of Boulder County (08–08–0790P).	February 6, 2009; February 13, 2009; *The Daily Camera.*	The Honorable Ben Pearlman, Chairman, Boulder County Board of Commissioners, P.O. Box 471 Boulder, CO 80306.	January 28, 2009	080023

State and county	Location and case No.	Date and name of newspaper where notice was published	Chief executive officer of community	Effective date of modification	Community No.
Connecticut: New Haven.	Town of Hamden (08–01–0419P).	July 24, 2008; July 31, 2008; *New Haven Register*.	The Honorable Craig Henrici, Mayor, Town of Hamden, Town Hall, 2750 Dixwell Avenue, Hamden, CT 06518.	July 30, 2008	090078
Florida					
Miami-Dade	City of Miami (08–04–6874P).	February 9, 2009; February 16, 2009; *Miami Herald*.	The Honorable Manual A. Diaz, Mayor, City of Miami, 3500 Pan American Drive, Miami, FL 33133–5595.	January 30, 2009	120650
Pinellas	City of Clearwater (08–04–6704P).	February 6, 2009; February 13, 2009; *St. Petersburg Times*.	The Honorable Frank V. Hibbard, Mayor, City of Clearwater, P.O. Box 4748, Clearwater, FL 33758.	January 28, 2009	125096
Georgia:					
Liberty	City of Flemington (08–04–4998P).	January 25, 2009; February 1, 2009; *Coastal Courier*.	The Honorable Sandra S. Martin, Mayor, City of Flemington, P.O. Box 46, Hinesville, GA 31310.	June 2, 2009	130124
Liberty	City of Hinesville (08–04–4998P).	January 25, 2009; February 1, 2009; *Coastal Courier*.	The Honorable James Thomas, Mayor, City of Hinesville, 115 East Martin Luther King, Jr. Drive, Hinesville, GA 31313.	June 2, 2009	130125
Idaho:					
Ada	Unincorporated areas of Ada County (08–10–0658P).	February 6, 2009; February 13, 2009; *Idaho Statesman*.	The Honorable Fred Tilman, Chairman, Ada County Board of Commissioners, 200 West Front Street, Boise, ID 83702.	June 15, 2009	160001
Ada	City of Meridian (08–10–0658P).	February 6, 2009; February 13, 2009; *Idaho Statesman*.	The Honorable Tammy de Weerd, Mayor, City of Meridian, Meridian City Hall, Suite 300, 33 East Broadway Avenue, Meridian, ID 83702.	June 15, 2009	160180
Teton	Unincorporated areas of Teton County (07–10–0061P).	March 20, 2008; March 27, 2009; *Teton Valley News*.	The Honorable Larry Young, Chairman, Teton County Board of Commissioners, P.O. Box 756, Driggs, ID 83422.	March 13, 2008	160230
Teton	Unincorporated areas of Teton County (07–10–0770P).	May 8, 2008; May 15, 2008; *Teton Valley News*.	The Honorable Larry Young, Chairman, Teton County Board of Commissioners, P.O. Box 756, Driggs, ID 83422.	September 12, 2008	160230
Iowa: Dubuque	Unincorporated areas of Dubuque County (08–07–0804P).	February 6, 2009; February 13, 2009; *Telegraph Herald*.	The Honorable Donna Smith, Supervisor, Dubuque County Board of Supervisors, 720 Central Avenue, Dubuque, IA 52001.	June 15, 2009	190534
Maine: Cumberland	Town of Falmouth (09–01–0124P).	February 6, 2009; February 13, 2009; *Portland Press Herald*.	The Honorable William Armitage, Chair, Falmouth Town Council, 271 Falmouth Road, Falmouth, ME 04105.	June 15, 2009	230045
Missouri: Clay, Platte, and Jackson.	City of Kansas City (08–07–0725P).	February 12, 2009; February 19, 2009; *The Daily Record*.	the Honorable Mark W. Funkhouser, Mayor, City of Kansas City, City Hall, 29th Floor, 414 East 12th Street, Kansas City, MO 64106.	June 19, 2009	290173
New Mexico: Sandoval.	City of Rio Rancho (08–06–3060P).	February 6, 2009; February 13, 2009; *The Albuquerque Journal*.	The Honorable Thomas E. Swisstack, Mayor, City of Rio Rancho, 3200 Civic Center Circle Northeast, Rio Rancho, NM 87144.	June 15, 2009	350146
Pennsylvania: Lehigh.	Township of Upper Macungie (08–03–1442P).	February 6, 2009; February 13, 2009; *The Morning Call*.	The Honorable Edward Earley, Chairman, Upper Macungie Township, 8330 Schantz Rd., Breinigsville, PA 18031.	January 29, 2009	421044
Texas:					
Brazos	City of Bryan (08–06–2045P).	February 12, 2009; February 19, 2009; *Bryan College Station Eagle*.	The Honorable Mark Conlee, Mayor, City of Bryan, 300 South Texas Avenue, Bryan, TX 77803.	June 19, 2009	480082
Collin	City of Frisco (09–06–0212P).	February 6, 2009; February 13, 2009; *Frisco Enterprise*.	The Honorable Maher Maso, Mayor, City of Frisco, 6101 Frisco Square Boulevard, Frisco, TX 75034.	June 15, 2009	480134
Guadalupe	City of Cibolo (08–06–2221P).	February 12, 2009; February 19, 2009; *Seguin Gazette Enterprise*.	The Honorable Johnny Sutton, Mayor, City of Cibolo, P.O. Box 826, Cibolo, TX 78108.	June 18, 2009	480267
Guadalupe	Unincorporated areas of Guadalupe County (08–06–2221P).	February 23, 2009; February 19, 2009; *Seguin Gazette Enterprise*.	The Honorable Mike Wiggins, Guadalupe County Judge, 307 West Court Street, Seguin, TX 78155.	June 18, 2009	480266
Hunt	City of Greenville (08–06–1111P).	July 30, 2008; August 6, 2008; *Herald Banner*.	The Honorable Tom Oliver, Mayor, City of Greenville, P.O. Box 1049, Greenville, TX 75401.	December 4, 2008	485473

(Catalog of Federal Domestic Assistance No. 97.022, ''Flood Insurance.'')

Dated: March 2, 2009.

Michael K. Buckley,

Acting Assistant Administrator, Mitigation Directorate, Department of Homeland Security, Federal Emergency Management Agency.

[FR Doc. E9–6629 Filed 3–24–09; 8:45 am]

BILLING CODE 9110–12–P

DEPARTMENT OF HOMELAND SECURITY

Federal Emergency Management Agency

44 CFR Part 65

[Docket ID FEMA–2008–0020; Internal Agency Docket No. FEMA–B–1033]

Changes in Flood Elevation Determinations

AGENCY: Federal Emergency Management Agency, DHS.

ACTION: Interim rule.

SUMMARY: This interim rule lists communities where modification of the Base (1% annual-chance) Flood Elevations (BFEs) is appropriate because of new scientific or technical data. New flood insurance premium rates will be calculated from the modified BFEs for new buildings and their contents.

DATES: These modified BFEs are currently in effect on the dates listed in the table below and revise the Flood Insurance Rate Maps (FIRMs) in effect prior to this determination for the listed communities.

From the date of the second publication of these changes in a newspaper of local circulation, any person has ninety (90) days in which to request through the community that the Mitigation Assistant Administrator of FEMA reconsider the changes. The modified BFEs may be changed during the 90-day period.

ADDRESSES: The modified BFEs for each community are available for inspection at the office of the Chief Executive Officer of each community. The respective addresses are listed in the table below.

FOR FURTHER INFORMATION CONTACT: William R. Blanton, Jr., Engineering Management Branch, Mitigation Directorate, Federal Emergency Management Agency, 500 C Street SW., Washington, DC 20472, (202) 646–3151.

SUPPLEMENTARY INFORMATION: The modified BFEs are not listed for each community in this interim rule. However, the address of the Chief Executive Officer of the community where the modified BFE determinations are available for inspection is provided.

Any request for reconsideration must be based on knowledge of changed conditions or new scientific or technical data.

The modifications are made pursuant to section 201 of the Flood Disaster Protection Act of 1973, 42 U.S.C. 4105, and are in accordance with the National Flood Insurance Act of 1968, 42 U.S.C. 4001 *et seq.*, and with 44 CFR part 65.

For rating purposes, the currently effective community number is shown and must be used for all new policies and renewals.

The modified BFEs are the basis for the floodplain management measures that the community is required to either adopt or to show evidence of being already in effect in order to qualify or to remain qualified for participation in the National Flood Insurance Program (NFIP).

These modified BFEs, together with the floodplain management criteria required by 44 CFR 60.3, are the minimum that are required. They should not be construed to mean that the community must change any existing ordinances that are more stringent in their floodplain management requirements. The community may at any time enact stricter requirements of its own, or pursuant to policies established by the other Federal, State, or regional entities. The changes BFEs are in accordance with 44 CFR 65.4.

National Environmental Policy Act. This interim rule is categorically excluded from the requirements of 44 CFR part 10, Environmental Consideration. An environmental impact assessment has not been prepared.

Regulatory Flexibility Act. As flood elevation determinations are not within the scope of the Regulatory Flexibility Act, 5 U.S.C. 601–612, a regulatory flexibility analysis is not required.

Regulatory Classification. This interim rule is not a significant regulatory action under the criteria of section 3(f) of Executive Order 12866 of September 30, 1993, Regulatory Planning and Review, 58 FR 51735.

Executive Order 13132, Federalism. This interim rule involves no policies that have federalism implications under Executive Order 13132, Federalism.

Executive Order 12988, Civil Justice Reform. This interim rule meets the applicable standards of Executive Order 12988.

List of Subjects in 44 CFR Part 65

Flood insurance, Floodplains, Reporting and recordkeeping requirements.

■ Accordingly, 44 CFR part 65 is amended to read as follows:

PART 65—[AMENDED]

■ 1. The authority citation for part 65 continues to read as follows:

Authority: 42 U.S.C. 4001 *et seq.*; Reorganization Plan No. 3 of 1978, 3 CFR, 1978 Comp., p. 329; E.O. 12127, 44 FR 19367, 3 CFR, 1979 Comp., p. 376.

§ 65.4 [Amended]

■ 2. The tables published under the authority of § 65.4 are amended as follows:

State and county	Location and Case No.	Date and name of newspaper where notice was published	Chief executive officer of community	Effective date of modification	Community No.
Arizona: Apache ...	Town of Eager (08–09–0712P).	October 24, 2008; October 31, 2008; *White Mountain Independent*.	The Honorable Bill Greenwood, Town Manager, Town of Eager, P.O. Box 1300, Eager, AZ 85925.	March 2, 2009	040103
Arizona: Maricopa	Town of Cave Creek (08–09–1202P).	December 18, 2008; December 25, 2008; *Arizona Business Gazette*.	The Honorable Vincent Francia, Mayor, Town of Cave Creek, 5140 East New River Road, Cave Creek, AZ 85331.	April 24, 2009	040129
Arizona: Maricopa	Unincorporated areas of Maricopa County (08–09–1202P).	December 18, 2008; December 25, 2008; *Arizona Business Gazette*.	The Honorable Andrew W. Kunasek, Chairman, Maricopa County, Board of Supervisors, 301 West Jefferson Street, 10th Floor, Phoenix, AZ 85003.	April 24, 2009	040037

State and county	Location and Case No.	Date and name of newspaper where notice was published	Chief executive officer of community	Effective date of modification	Community No.
Arizona: Maricopa	City of Phoenix (08–09–1412P).	December 18, 2008; December 25, 2008; *Arizona Business Gazette*.	The Honorable Phil Gordon, Mayor, City of Phoenix, 200 West Washington Street, 11th Floor, Phoenix, AZ 85003.	November 28, 2008.	040051
Colorado: Douglas	Unincorporated areas of Douglas County (07–08–0979P).	December 4, 2008; December 11, 2008; *Douglas County News-Press*.	The Honorable Melanie A. Worley, Chairperson, Douglas County, Board of County Commissioners, 100 Third Street, Castle Rock, CO 80104.	April 10, 2009	080049
Colorado: El Paso	Town of Palmer Lake (07–08–0979P).	December 3, 2008; December 10, 2008; *The Tribune*.	The Honorable John Cressman, Mayor, Town of Palmer Lake, P.O. Box 208, Palmer Lake, CO 80133.	April 10, 2009	080065
Delaware: New Castle.	Unincorporated areas of New Castle County (08–03–1537P).	December 18, 2008; December 25, 2008; *The News Journal*.	The Honorable Christopher Coons, New Castle County Executive, 87 Reads Way, New Castle, DE 19720.	April 17, 2009	105085
Florida: Duval	City of Jacksonville Beach (08–04–6323P).	December 26, 2008; January 2, 2009; *The Beaches Leader*.	The Honorable Fland Sharp, Mayor, City of Jacksonville Beach, 11 North Third Street, Jacksonville Beach, FL 32250.	December 22, 2008.	120078
Georgia: Barrow ...	Unincorporated areas of Barrow County (08–04–5370P).	December 10, 2008; December 17, 2008; *The Barrow County News*.	Mr. Douglas H. Garrison, Chairman, Barrow County, Board of Commissioners 233 East Broad Street, Winder, GA 30680.	April 16, 2009	130497
Georgia: Hall	Unincorporated areas of Hall County (08–04–4322P).	December 11, 2008; December 18, 2008; *Gainesville Times*.	Mr. Tom Oliver, Chairman, Hall County, Board of Commissioners, P.O. Box 1435, Gainesville, GA 30503.	April 17, 2009	130466
Georgia: Jackson	Unincorporated areas of Jackson County (08–04–4322P).	December 10, 2008; December 17, 2008; *The Jackson Herald*.	Ms. Pat Bell, Chairperson, Jackson County Board of Commissioners, 67 Athens Street, Jefferson, GA 30549.	April 17, 2009	130345
Georgia: Jackson	Unincorporated areas of Jackson County (08–04–5370P).	December 10, 2008; December 17, 2008; *The Jackson Herald*.	Ms. Pat Bell, Chairman, Jackson County Board of Commissioners, 67 Athens Street, Jefferson, GA 30549.	April 16, 2009	130345
Idaho: Ada	Unincorporated areas of Ada County (08–10–0528P).	December 22, 2008; December 29, 2008; *Idaho Statesman*.	The Honorable Fred Tilman, Chairman, Ada County Board of Commissioners, 200 West Front Street, Boise, ID 83702.	April 28, 2009	160001
Idaho: Ada	City of Eagle (08–10–0528P).	December 22, 2008; December 29, 2008; *Idaho Statesman*.	The Honorable Phil Brandy, Mayor, City of Eagle, P.O. Box 1520, Eagle, ID 83616.	April 28, 2009	160003
Ohio: Licking	City of Newark (08–05–4680P).	December 8, 2008; December 15, 2008; *The Newark Advocate*.	The Honorable Bob Diebold, Mayor, City of Newark, 40 West Main Street, Newark, OH 43055.	April 14, 2009	390335
Pennsylvania: Chester.	Township of Birmingham (08–03–1499P).	December 30, 2008; January 6, 2009; *The Daily Local News*.	The Honorable John L. Conklin, Chairman, Birmingham Township Board of Supervisors, 1040 West Street Road, West Chester, PA 19382–8012.	May 6, 2009	421474
Texas: Collin	Unincorporated areas of Collin County (08–06–1493P).	December 5, 2008; December 12, 2008; *McKinney Courier-Gazette*.	The Honorable Keith Self, Collin County Judge, 210 South McDonald Street, Suite 626, McKinney, TX 75069.	April 13, 2009	480130
Texas: Collin	City of Lowry Crossing (08–06–1493P).	December 5, 2008; December 12, 2008; *McKinney Courier-Gazette*.	The Honorable Gary Piatt, Mayor, City of Lowry Crossings, 1405 South Bridge Farmer Rd, McKinney, TX 75069.	April 13, 2009	481631
Texas: Collin	City of McKinney (08–06–1493P).	December 5, 2008; December 12, 2008; *McKinney Courier-Gazette*.	The Honorable Bill Whitfield, Mayor, City of McKinney, 222 North Tennessee, McKinney, TX 75069.	April 13, 2009	480135
Texas: Collin	City of McKinney (08–06–1994P).	December 8, 2008; December 15, 2008; *McKinney Courier-Gazette*.	The Honorable Bill Whitfield, Mayor, City of McKinney, 222 North Tennessee, McKinney, TX 75069.	April 14, 2009	480135

(Catalog of Federal Domestic Assistance No. 97.022, ''Flood Insurance.'')

Dated: January 22, 2009.

Michael K. Buckley,

Acting Assistant Administrator, Mitigation Directorate, Department of Homeland Security, Federal Emergency Management Agency.

[FR Doc. E9–6672 Filed 3–24–09; 8:45 am]

BILLING CODE 9110–12–P

DEPARTMENT OF HOMELAND SECURITY

Federal Emergency Management Agency

44 CFR Part 65

[Docket ID FEMA–2008–0020]

Changes in Flood Elevation Determinations

AGENCY: Federal Emergency Management Agency, DHS.

ACTION: Final rule.

SUMMARY: Modified Base (1% annual-chance) Flood Elevations (BFEs) are finalized for the communities listed below. These modified BFEs will be used to calculate flood insurance premium rates for new buildings and their contents.

DATES: The effective dates for these modified BFEs are indicated on the following table and revise the Flood Insurance Rate Maps (FIRMs) in effect for the listed communities prior to this date.

ADDRESSES: The modified BFEs for each community are available for inspection at the office of the Chief Executive Officer of each community. The respective addresses are listed in the table below.

FOR FURTHER INFORMATION CONTACT: William R. Blanton, Jr., Engineering Management Branch, Mitigation Directorate, Federal Emergency Management Agency, 500 C Street SW., Washington, DC 20472, (202) 646–3151.

SUPPLEMENTARY INFORMATION: The Federal Emergency Management Agency (FEMA) makes the final determinations listed below of the modified BFEs for each community listed. These modified BFEs have been published in newspapers of local circulation and ninety (90) days have elapsed since that publication. The Mitigation Division Director of FEMA resolved any appeals resulting from this notification.

The modified BFEs are not listed for each community in this notice. However, this final rule includes the address of the Chief Executive Officer of the community where the modified BFEs determinations are available for inspection.

The modified BFEs are made pursuant to section 206 of the Flood Disaster Protection Act of 1973, 42 U.S.C. 4105, and are in accordance with the National Flood Insurance Act of 1968, 42 U.S.C. 4001 *et seq.*, and with 44 CFR part 65.

For rating purposes, the currently effective community number is shown and must be used for all new policies and renewals.

The modified BFEs are the basis for the floodplain management measures that the community is required to either adopt or to show evidence of being already in effect in order to qualify or to remain qualified for participation in the National Flood Insurance Program (NFIP).

These modified BFEs, together with the floodplain management criteria required by 44 CFR 60.3, are the minimum that are required. They should not be construed to mean that the community must change any existing ordinances that are more stringent in their floodplain management requirements. The community may at any time enact stricter requirements of its own, or pursuant to policies established by other Federal, State, or regional entities.

These modified BFEs are used to meet the floodplain management requirements of the NFIP and are also used to calculate the appropriate flood insurance premium rates for new buildings built after these elevations are made final, and for the contents in these buildings. The changes in BFEs are in accordance with 44 CFR 65.4.

National Environmental Policy Act. This final rule is categorically excluded from the requirements of 44 CFR part 10, Environmental Consideration. An environmental impact assessment has not been prepared.

Regulatory Flexibility Act. As flood elevation determinations are not within the scope of the Regulatory Flexibility Act, 5 U.S.C. 601–612, a regulatory flexibility analysis is not required.

Regulatory Classification. This final rule is not a significant regulatory action under the criteria of section 3(f) of Executive Order 12866 of September 30, 1993, Regulatory Planning and Review, 58 FR 51735.

Executive Order 13132, Federalism. This final rule involves no policies that have federalism implications under Executive Order 13132, Federalism.

Executive Order 12988, Civil Justice Reform. This final rule meets the applicable standards of Executive Order 12988.

List of Subjects in 44 CFR Part 65

Flood insurance, Floodplains, Reporting and recordkeeping requirements.

■ Accordingly, 44 CFR part 65 is amended to read as follows:

PART 65—[AMENDED]

■ 1. The authority citation for part 65 continues to read as follows:

Authority: 42 U.S.C. 4001 *et seq.*; Reorganization Plan No. 3 of 1978, 3 CFR, 1978 Comp., p. 329; E.O. 12127, 44 FR 19367, 3 CFR, 1979 Comp., p.376.

§ 65.4 [Amended]

■ 2. The tables published under the authority of § 65.4 are amended as follows:

State and county	Location and case No.	Date and name of newspaper where notice was published	Chief executive officer of community	Effective date of modification	Community No.
Arizona: Maricopa (FEMA Docket No.: B–1019).	City of Phoenix (06–09-B582P).	December 27, 2007; January 3, 2008; *Arizona Business Gazette*.	The Honorable Phil Gordon, Mayor, City of Phoenix, 200 West Washington Street, 11th Floor, Phoenix, AZ 85003–1611.	April 3, 2008	040051
California:					
Fresno (FEMA Docket No.: B–1015).	Unincorporated areas of Fresno County (07–09–1791P).	August 26, 2008; September 2, 2008; *The Fresno Bee*.	The Honorable Henry Perea, Chairman, Fresno County, Board of Supervisors 2281 Tulare Street, Room 300 Fresno, CA 93721.	June 16, 2008	065029
San Diego (FEMA Docket No.: B–1001).	City of Escondido (07–09–1345P).	July 24, 2008; July 31, 2008; *San Diego Transcript*.	The Honorable Lori Holt Pfeiler Mayor, City of Escondido 201 North Broadway Escondido, CA 92025.	November 28, 2008	060290
Colorado:					

State and county	Location and case No.	Date and name of newspaper where notice was published	Chief executive officer of community	Effective date of modification	Community No.
Arapahoe (FEMA Docket No.: B–1001).	Unincorporated areas of Arapahoe County (08–08–0536P).	July 17, 2008; July 24, 2008; *Aurora Sentinel*.	The Honorable Susan Beckman, Chair, Arapahoe County, Board of Commissioners, 5334 South Prince Street, Littleton, CO 80166–0001.	November 21, 2008	080011
Arapahoe (FEMA Docket No.: B–1001).	City of Aurora (08–08–0536P).	July 17, 2008; July 24, 2008; *Aurora Sentinel*.	The Honorable Ed Tauer Mayor, City of Aurora, 15151 East Alameda Parkway, Aurora, CO 80012.	November 21, 2008	080002
Arapahoe (FEMA Docket No.: B–1001).	City of Centennial (08–08–0536P).	July 17, 2008; July 24, 2008; *Aurora Sentinel*.	The Honorable Randy Pye, Mayor, City of Centennial, City of Centennial Office, 12503 East Euclid Drive, Suite 200 Centennial, CO 80111.	November 21, 2008	080315
Connecticut:					
Fairfield (FEMA Docket No.: B–1019).	City of Stamford (08–01–0709P).	June 20, 2008; June 27, 2008; *The Advocate*.	The Honorable Dannel P. Malloy, Mayor, City of Stamford, 888 Washington Boulevard, Stamford, CT 06904.	May 30, 2008	090015
Florida: Polk (FEMA Docket No.: B–1001).	City of Winter Haven (08–04–2591P).	July 17, 2008; July 24, 2008; *Winter Haven News Chief*.	The Honorable Nathaniel Birdsong, Jr., Mayor, City of Winter Haven, 451 Third Street, Northwest, Winter Haven, FL 33881.	November 21, 2008	120271
Georgia: Columbia (FEMA Docket No.: B–1001).	Unincorporated areas of Columbia County (08–04–0423P).	July 27, 2008; August 3, 2008; *Columbia County News-Times*.	The Honorable Ron C. Cross, Chairman, Columbia County, Board of Commissioners, P.O. Box 498, Evans, GA 30809.	December 2, 2008	130059
Idaho:					
Ada (FEMA Docket No.: B–7776).	Unincorporated areas of Ada County (07–10–0624P).	February 28, 2008; March 6, 2008; *Idaho Statesman*.	The Honorable Fred Tilman, Chairman, Ada County, Board of Commissioners, 200 West Front Street, Boise, ID 83702.	July 7, 2008	160001
Ada (FEMA Docket No.: B–7776).	City of Meridian (07–10–0624P).	February 28, 2008; March 6, 2008; *Idaho Statesman*.	The Honorable Tammy De Weerd, Mayor, City of Meridian, 33 East Idaho Avenue, Meridian, ID 83642–2300.	July 7, 2008	160180
Illinois: Cook (FEMA Docket No.: B–1019).	Village of Barrington Hills (08–05–2649P).	May 22, 2008; May 29, 2008; *Barrington Courier Review*.	The Honorable Robert G. Abboud, President, Village of Barrington Hills, 112 Algonquin Road, Barrington Hills, IL 60010.	April 30, 2008	170058
Iowa: Dallas (FEMA Docket No.: B–1008).	City of Grainger (08–07–0907P).	August 21, 2008; August 28, 2008; *Northeast Dallas Record*.	The Honorable James Doyle, Mayor, City of Granger, 1906 Main Street, Granger, IA 50109.	July 31, 2008	190104
Maryland:					
Carroll (FEMA Docket No.: B–1001).	Unincorporated areas of Carroll County (08–03–0973P).	July 31, 2008; August 7, 2008; *Carroll County Times*.	The Honorable Julia Gouge, Commissioner, Carroll County, 225 North Center Street, Westminster, MD 21157.	December 5, 2008	240015
Carroll (FEMA Docket No.: B–1001).	City of Westminster (08–03–0973P).	July 31, 2008; August 7, 2008; *Carroll County Times*.	The Honorable Thomas K. Ferguso,n Mayor, City of Westminster, 1838 Emerald Hill Lane, Westminster, MD 21158.	December 5, 2008	240018
New Mexico:					
Sandoval (FEMA Docket No.: B–1001).	Town of Bernalillo (08–06–0693P).	July 17, 2008; July 24, 2008; *Santa Fe New Mexican*.	The Honorable Patricia A. Chavez, Mayor, Town of Bernalillo, P.O. Box 638, Bernalillo, NM 87004.	November 21, 2008	350056
Sandoval (FEMA Docket No.: B–1001).	City of Rio Rancho (08–06–0693P).	July 17, 2008; July 24, 2008; *Santa Fe New Mexican*.	The Honorable Thomas E. Swisstack, Mayor, City of Rio Rancho, 3200 Civic Center Circle, Northeast, Rio Rancho, NM 87144.	November 21, 2008	350146
Sandoval (FEMA Docket No.: B–1001).	Unincorporated areas of Sandoval County (08–06–0693P).	July 17, 2008; July 24, 2008; *Santa Fe New Mexican*.	The Honorable Joshua Madalena, Chairman, Sandoval County Commission, Sandoval County Courthouse, 711 Camino Del Pueblo, Bernalillo, NM 87004.	November 21, 2008	350055
Ohio:					
Franklin (FEMA Docket No.: B–1015).	Unincorporated areas of Franklin County (08–05–0337P).	August 20, 2008; August 27, 2008; *Hilliard News*.	The Honorable Mary Jo Kilroy, Commissioner, Franklin County, 373 South High Street, 26th Floor, Columbus, OH 43215.	August 4, 2008	390167
Franklin (FEMA Docket No.: B–1015).	City of Hilliard (08–05–0337P).	August 20, 2008; August 27, 2008; *Hilliard News*.	The Honorable Donald J. Schonhardt, Mayor, City of Hilliard, 3800 Municipal Way, Hilliard, OH 43026.	August 4, 2008	390175
Texas:					
Bastrop (FEMA Docket No.: B–1019).	City of Bastrop (08–06–0048P).	July 9, 2008; July 16, 2008; *Elgin Courier*.	The Honorable Terry Orr, Mayor, City of Bastrop, P.O. Box 427, Bastrop, TX 78602.	November 13, 2008	480022
Bastrop (FEMA Docket No.: B–1019).	Unincorporated areas of Bastrop County (08–06–0048P).	July 9, 2008; July 16, 2008; *Elgin Courier*.	The Honorable Ronnie McDonald, Bastrop County Judge, 804 Pecan Street, Bastrop, TX 78602.	November 13, 2008	481193
Brazos (FEMA Docket No.: B–1008).	City of Bryan (08–06–0692P).	August 7, 2008; August 14, 2008; *Bryan College Station Eagle*.	The Honorable D. Mark Conlee, Mayor, City of Bryan, 300 South Texas Avenue, Bryan, TX 77803.	July 25, 2008	480082

State and county	Location and case No.	Date and name of newspaper where notice was published	Chief executive officer of community	Effective date of modification	Community No.
Brazos (FEMA Docket No.: B–1008).	City of College Station (08–06–1882P).	July 31, 2008; August 7, 2008; *Bryan College Station Eagle*.	The Honorable Ben White, Mayor, City of College Station, 1101 Texas Avenue, College Station, TX 77840.	December 5, 2008	480083
Johnson (FEMA Docket No.: B–1011).	City of Burleson (08–06–0660P).	August 6, 2008; August 13, 2008; *Burleson Star*.	The Honorable Kenneth Shetter, Mayor, City of Burleson, 141 West Renfro Street, Burleson, TX 76028.	December 11, 2008	485459
Travis (FEMA Docket No.: B–7785).	City of Austin (08–06–0658P).	May 1, 2008; May 8, 2008; *Austin American Statesman*.	The Honorable Will Wynn, Mayor, City of Austin, P.O. Box 1088, Austin, TX 78767.	September 5, 2008	480624
Utah: Uintah (FEMA Docket No.: B–1001).	Unincorporated areas of Uintah County (08–08–0264P).	July 22, 2008; July 29, 2008; *Uintah Basin Standard*.	The Honorable Mike McKee, Chairman, Uintah County, Board of Commissioners, 152 East 100 North, Vernal, UT 84078.	November 26, 2008	490147
Virginia:					
Frederick (FEMA Docket No.: B–1001).	Unincorporated areas of Frederick County (08–03–1051P).	July 28, 2008; August 4, 2008; *The Winchester Star*.	The Honorable Richard C. Shickle, Chairman At-Large, Frederick County, Board of Supervisors, 292 Green Spring Road, Winchester, VA 22603.	December 2, 2008	510063
Independent City (FEMA Docket No.: B–1019).	City of Lynchburg (08–03–0310P).	July 18, 2008; July 25, 2008; *The Lynchburg Ledger*.	The Honorable Joan F. Foster, 900 Church Street, Lynchburg, VA 24504.	November 21, 2008	510093
Independent City (FEMA Docket No.: B–1001).	City of Winchester (08–03–1051P).	July 28, 2008; August 4, 2008; *The Winchester Star*.	The Honorable Elizabeth Minor, Mayor, City of Winchester 231, East Piccadilly Street, Suite 310, Winchester, VA 22601.	December 2, 2008	510173
Independent City (FEMA Docket No.: B–7797).	City of Winchester (08–03–0801P).	May 8, 2008; May 15, 2008; *The Winchester Star*.	The Honorable Elizabeth Minor, Mayor, City of Winchester, 231 East Piccadilly Street, Suite 310, Winchester, VA 22601.	September 12, 2008	510173
Wisconsin: Dane (FEMA Docket No.: B–1019).	Village of Waunakee (08–05–1363P).	August 14, 2008; August 21, 2008; *Waunakee Tribune*.	Mr. Kim Wilde, Village Administrator, Village of Waunakee, 500 West Main Street, Waunakee, WI 53597.	November 26, 2008	550093
Wyoming:					
Sweetwater (FEMA Docket No.: B–7761).	City of Rock Springs (07–08–0796P).	September 22, 2007; September 27, 2007; *Rock Springs Daily Rocket-Miner*.	The Honorable Timothy A. Kaumo, Mayor, City of Rock Springs, 212 D Street, Rock Springs, WY 82901.	October 1, 2007	560051
Sweetwater (FEMA Docket No.: B–7761).	Unincorporated areas of Sweetwater County (07–08–0796P).	September 22, 2007; September 27, 2007; *Rock Springs Daily Rocket-Miner*.	The Honorable Wally Johnson, Chairman, Sweetwater County, Board of Commissioners, 80 West Flamingo, Gorge Way Green River, WY 82935.	October 1, 2007	560087

(Catalog of Federal Domestic Assistance No. 97.022, ''Flood Insurance.'')

Dated: January 6, 2009.

Michael K. Buckley,

Acting Assistant Administrator, Mitigation Directorate, Department of Homeland Security, Federal Emergency Management Agency.

[FR Doc. E9–6630 Filed 3–24–09; 8:45 am]

BILLING CODE 9110–12–P

DEPARTMENT OF HOMELAND SECURITY

Federal Emergency Management Agency

44 CFR Part 67

[Docket ID FEMA–2008–0020]

Final Flood Elevation Determinations

AGENCY: Federal Emergency Management Agency, DHS.

ACTION: Final rule.

SUMMARY: Base (1% annual chance) Flood Elevations (BFEs) and modified BFEs are made final for the communities listed below. The BFEs and modified BFEs are the basis for the floodplain management measures that each community is required either to adopt or to show evidence of being already in effect in order to qualify or remain qualified for participation in the National Flood Insurance Program (NFIP).

DATES: The date of issuance of the Flood Insurance Rate Map (FIRM) showing BFEs and modified BFEs for each community. This date may be obtained by contacting the office where the maps are available for inspection as indicated on the table below.

ADDRESSES: The final BFEs for each community are available for inspection at the office of the Chief Executive Officer of each community. The respective addresses are listed in the table below.

FOR FURTHER INFORMATION CONTACT: William R. Blanton, Jr., Engineering Management Branch, Mitigation Directorate, Federal Emergency Management Agency, 500 C Street SW., Washington, DC 20472, (202) 646–3151.

SUPPLEMENTARY INFORMATION: The Federal Emergency Management Agency (FEMA) makes the final determinations listed below for the modified BFEs for each community listed. These modified elevations have been published in newspapers of local circulation and ninety (90) days have elapsed since that publication. The Assistant Administrator of the Mitigation Directorate has resolved any appeals resulting from this notification.

This final rule is issued in accordance with section 110 of the Flood Disaster Protection Act of 1973, 42 U.S.C. 4104, and 44 CFR part 67. FEMA has developed criteria for floodplain management in floodprone areas in accordance with 44 CFR part 60.

Interested lessees and owners of real property are encouraged to review the proof Flood Insurance Study and FIRM available at the address cited below for each community.

The BFEs and modified BFEs are made final in the communities listed below. Elevations at selected locations in each community are shown.

National Environmental Policy Act. This final rule is categorically excluded

from the requirements of 44 CFR part 10, Environmental Consideration. An environmental impact assessment has not been prepared.

Regulatory Flexibility Act. As flood elevation determinations are not within the scope of the Regulatory Flexibility Act, 5 U.S.C. 601–612, a regulatory flexibility analysis is not required.

Regulatory Classification. This final rule is not a significant regulatory action under the criteria of section 3(f) of Executive Order 12866 of September 30, 1993, Regulatory Planning and Review, 58 FR 51735.

Executive Order 13132, Federalism. This final rule involves no policies that have federalism implications under Executive Order 13132.

Executive Order 12988, Civil Justice Reform. This final rule meets the applicable standards of Executive Order 12988.

List of Subjects in 44 CFR Part 67

Administrative practice and procedure, Flood insurance, Reporting and recordkeeping requirements.

■ Accordingly, 44 CFR part 67 is amended as follows:

PART 67—[AMENDED]

■ 1. The authority citation for part 67 continues to read as follows:

Authority: 42 U.S.C. 4001 *et seq.*; Reorganization Plan No. 3 of 1978, 3 CFR, 1978 Comp., p. 329; E.O. 12127, 44 FR 19367, 3 CFR, 1979 Comp., p. 376.

§ 67.11 [Amended]

■ 2. The tables published under the authority of § 67.11 are amended as follows:

State	City/town/county	Source off looding	Location	*Elevation in feet(NGVD) +Elevation in feet (NAVD) #Depth in feet above ground Modified
City of Norfolk, Virginia FEMA Docket No.: B–1002				
Virginia	City of Norfolk	Chesapeake Bay	Approximately 320 feet north of the intersection of Ocean Avenue and 20th Street.	+9.1
Virginia	City of Norfolk	Eastern Branch Elizabeth River.	Approximately 500 feet southwest of Atlantic Street and Waterfront Avenue.	+9.1
Virginia	City of Norfolk	Elizabeth River	Approximately 1650 feet west of the intersection of Redgate Avenue and Norfolk Southern Railroad Yard Access Road	+9.1
			Approximately at the waterfront edge of the Norfolk and Southern Railyard.	+9.1

* National Geodetic Vertical Datum.
# Depth in feet above ground.
+ North American Vertical Datum.

ADDRESSES

City of Norfolk
Maps are available for inspection at 400 Granby StreetS, Norfolk, VA 23510.

Flooding source(s)	Location of referenced elevation	*Elevation in feet (NGVD) +Elevation in feet (NAVD) # Depth in feet above ground Modified	Communities affected
Trinity County, California and Incorporated Areas, Docket No.: FEMA–B–7762			
Carter Gulch	At the confluence with Hayfork Creek	*2,304	Unincorporated Areas of Trinity County.
	Approximately 960 feet upstream of Highway 3	*2,340	
Ewing Gulch	At the confluence with Hayfork Creek	*2,305	Unincorporated Areas of Trinity County.
	Approximately 770 feet upstream of State Highway 3	*2,343	
Hayfork Creek	Approximately 260 feet downstream of the confluence of Salt Creek.	*2,280	Unincorporated Areas of Trinity County.
	Approximately 300 feet upstream of Bridge Street	*2,322	
Kellogg Gulch	At the confluence with Hayfork Creek	*2,302	Unincorporated Areas of Trinity County.
	Approximately 980 feet upstream of State Highway 3	*2,343	

Depth in feet above ground.
* National Geodetic Vertical Datum.
+ North American Vertical Datum.

ADDRESSES

Unincorporated Areas of Trinity County
Maps are available for inspection at the Trinity County Planning Department and Planning Commission, 61 Airport Road, Weaverville, California.

Flooding source(s)	Location of referenced elevation	*Elevation in feet (NGVD) +Elevation in feet (NAVD) # Depth in feet above ground Modified	Communities affected
Oconee County, Georgia, and Incorporated Areas, FEMA Docket No.: B–7794			
Calls Creek	Approximately 3,100 feet downstream of U.S. Highway 441/State Highway 15.	+612	Unincorporated Areas of Oconee County, City of Watkinsville.
	At U.S. Highway 441/U.S. Highway 129 Bypasses/State Highway 24/186.	+669	
Lampkin Branch	At confluence with Calls Creek	+637	City of Watkinsville.
	Approximately 1,280 feet upstream of confluence with Calls Creek.	+642	
Porters Creek	At confluence with Oconee River	+527	Unincorporated Areas of Oconee County.
	Approximately 550 feet upstream of confluence with Oconee River.	+527	

* National Geodetic Vertical Datum.
# Depth in feet above ground.
+ North American Vertical Datum.

ADDRESSES

City of Watkinsville
Maps are available for inspection at City Hall, 191 VFW Drive, Watkinsville, GA 30677.
Unincorporated Areas of Oconee County
Maps are available for inspection at Oconee County Planning Department, 22 North Main Street, Watkinsville, GA 30677.

McCreary County, Kentucky, and Incorporated Areas, FEMA Docket No.: B–7787			
South Fork Cumberland River	At confluence with Cooper Creek (At north western county boundary).	+760	Unincorporated Areas of McCreary County.
	Approximately 8,000 feet upstream Alum Creek	+760	

* National Geodetic Vertical Datum.
# Depth in feet above ground.
+ North American Vertical Datum.

ADDRESSES

Unincorporated Areas of Mccreary County
Maps are available for inspection at 1 N Main St, Whitley City, KY 42563.

Union County, Kentucky, and Incorporated Areas FEMA Docket No.: B–7794			
Ohio River	At confluence with Tradewater River (At Union County/Crittenden County boundary).	+362	Town of Uniontown, Unincorporated Areas of Union County.
	Approximately at 9.9 miles upstream confluence with Higland Creek (At Union County/Henderson County).	+371	

* National Geodetic Vertical Datum.
# Depth in feet above ground.
+ North American Vertical Datum.

ADDRESSES

Town of Uniontown
Maps are available for inspection at Third and Main Streets, Uniontown, KY 42461.
Unincorporated Areas of Union County
Maps are available for inspection at 100 West Main Street, Morganfield, KY 42437.

Wayne County, Kentucky and Incorporated Areas, FEMA Docket No.: B–7794			
Lake Cumberland	At Wolfe Creek Dam	+760	City of Monticello, Unincorporated Areas of Wayne County.
	Approximately at 7,600 feet upstream Dugger Branch (North eastern county boundary).	+760	

* National Geodetic Vertical Datum.
# Depth in feet above ground.
+ North American Vertical Datum.

ADDRESSES

City of Monticello
Maps are available for inspection at 157 South Main Street, Monticello, KY 42633.
Unincorporated Areas of Wayne County

Flooding source(s)	Location of referenced elevation	*Elevation in feet (NGVD) +Elevation in feet (NAVD) # Depth in feet above ground Modified	Communities affected
Maps are available for inspection at 109 N. Main St., Monticello, KY 42633.			
Alleghany County, North Carolina and Incorporated Areas, Docket No.: FEMA–B–1004			
Bledsoe Creek	At the confluence with Little River	+2,752	Alleghany County, Town of Sparta.
	Approximately 920 feet upstream of Green Needles Lane	+2,919	
Bledsoe Creek Tributary 1	At the confluence with Bledsoe Creek	+2,759	Town of Sparta.
	Approximately 110 feet upstream of Cherry Street	+2,896	
Brush Creek	At the confluence with Little River	+2,443	Alleghany County.
	Approximately 1.6 miles upstream of Fox Ridge Road.	+2,522	
Crab Creek	At the confluence with Little River	+2,337	Alleghany County.
	Approximately 0.6 mile upstream of the confluence with Little River.	+2,366	
Cranberry Creek	At the Alleghany/Ashe County boundary	+2,739	Alleghany County.
	Approximately 850 feet upstream of the Alleghany/Ashe County boundary.	+2,743	
Glade Creek	At the confluence with Little River	+2,499	Alleghany County.
	Approximately 1.4 miles upstream of the confluence of Glade Creek Tributary 2.	+2,529	
Glade Creek Tributary 1	At the confluence with Glade Creek	+2,501	Alleghany County.
	Approximately 0.4 mile upstream of Fox Den Lane	+2,565	
Glade Creek Tributary 2	At the confluence with Glade Creek	+2,509	Alleghany County.
	Approximately 0.8 mile upstream of the confluence with Glade Creek.	+2,579	
Little River	Approximately 1,100 feet downstream of the confluence of Crab Creek.	+2,333	Alleghany County, Town of Sparta.
	Approximately 1.0 mile upstream of the confluence of Little River Tributary 2.	+2,851	
Little River Tributary 1	At the confluence with Little River	+2,587	Alleghany County.
	Approximately 1,950 feet upstream of the confluence with Little River.	+2,660	
Little River Tributary 2	At the confluence with Little River	+2,829	Alleghany County, Town of Sparta.
	Approximately 0.7 mile upstream of the confluence with Little River.	+2,905	
Moccasin Creek	At the confluence with Little River	+2,431	Alleghany County.
	Approximately 0.6 mile upstream of the confluence with Little River.	+2,480	
New River	Approximately 0.4 mile downstream of the confluence with New River Tributary 1.	+2,318	Alleghany County.
	At the confluence of South Fork New River and North Fork New River.	+2,487	
New River Tributary 1	Approximately 200 feet upstream of the confluence with New River.	+2,319	Alleghany County.
	Approximately 0.7 mile upstream of the confluence with New River.	+2,364	
New River Tributary 2	At the confluence with New River	+2,339	Alleghany County.
	Approximately 1,720 feet upstream of Riverwood Lane	+2,390	
Pine Swamp Creek	At the confluence with Little River	+2,803	Alleghany County.
	Approximately 0.7 mile upstream of Grandview Drive (State Road 1172).	+2,818	
South Fork New River	At the confluence with New River	+2,487	Alleghany County.
	Approximately 1.4 miles upstream of the confluence of South Fork New River Tributary 2.	+2,526	
South Fork New River Tributary 1.	At the confluence with South Fork New River	+2,509	Alleghany County.
	Approximately 0.5 mile upstream of the confluence with South Fork New River.	+2,535	
South Fork New River Tributary 2.	At the confluence with South Fork New River	+2,516	Alleghany County.
	Approximately 0.7 mile upstream of the confluence with South Fork New River.	+2,572	
Vile Creek	At the confluence with Little River	+2,674	Alleghany County, Town of Sparta.
	Approximately 1,660 feet upstream of NC Highway 18	+2,759	

Flooding source(s)	Location of referenced elevation	*Elevation in feet (NGVD) +Elevation in feet (NAVD) # Depth in feet above ground Modified	Communities affected
Vile Creek Tributary 1	At the confluence with Vile Creek	+2,695	Alleghany County, Town of Sparta.
	Approximately 0.4 mile upstream of the confluence with Vile Creek.	+2,751	

Depth in feet above ground.
* National Geodetic Vertical Datum.
+ North American Vertical Datum.

ADDRESSES

Alleghany County
Maps are available for inspection at Alleghany County Planning Department, County Administration Building, 348 South Main Street, Sparta, North Carolina.
Town of Sparta
Maps are available for inspection at Sparta Town Hall, 304 South Main Street, Sparta, North Carolina.

Hanson County, South Dakota and Incorporated Areas, FEMA Docket No.: B1014

James River	1,050 feet upstream from 262nd St	+1215	Unincorporated Areas of Hanson County.
	540 feet upstream from Interstate 90	+1223	

* National Geodetic Vertical Datum.
# Depth in feet above ground.
+ North American Vertical Datum.

ADDRESSES

Unincorporated Areas of Hanson County
Maps are available for inspection at P.O. Box 500, Alexandria, SD 57311.

Hutchinson County, South Dakota, and Incorporated Areas, FEMA Docket No.: B–7796

James River	Approximately 50 feet upstream of Maxwell Road	+1189	Unincorporated Areas of Hutchinson County, Town of Olivet.
	Approximately 2,600 feet downstream of 269th Street	+1210	

* National Geodetic Vertical Datum.
# Depth in feet above ground.
+ North American Vertical Datum.

ADDRESSES

Town of Olivet
Maps are available for inspection at P.O. Box 490, Parkston, SD 57366.
Unincorporated Areas of Hutchinson County
Maps are available for inspection at P.O. Box 490, Parkston, SD 57366.

Lake County, South Dakota and Incorporated Areas FEMA Docket No.: B–1016

Park Creek	1,720 feet downstream of 4th Street S.	+1657	City of Madison.
	75 feet upstream from Washington Ave N.	+1671	
	50 feet upstream of 9th Street NE.	+1684	
Park Creek Tributary	150 feet downstream from Union Ave.	+1681	City of Madison.
	150 feet upstream from Chicago Ave.	+1684	
	50 feet upstream of U.S. Highway 81	+1695	
Silver Creek	At confluence with Park Creek	+1659	City of Madison.
	100 feet downstream from Egan Ave.	+1665	
	50 feet upstream of Highland Avenue.	+1671	

* National Geodetic Vertical Datum.
# Depth in feet above ground.
+ North American Vertical Datum.

ADDRESSES

City of Madison
Maps are available for inspection at 116 W Center, Madison, SD 57042.

Minnehaha County, South Dakota and Incorporated Areas, FEMA Docket No.: B–7781

Big Sioux River	Approximately 7,120 feet downstream from South Dakota Highway 42.	+1286	Unincorporated Areas of Minnehaha County.
	Approximately 1,000 feet downstream from South Dakota Highway 42.	+1289	

Flooding source(s)	Location of referenced elevation	*Elevation in feet (NGVD) +Elevation in feet (NAVD) # Depth in feet above ground Modified	Communities affected
Big Sioux River	Approximately 2,500 feet downstream from Burlington Northern Santa Fe Railroad.	+1305	City of Sioux Falls, Unincorporated Areas of Minnehaha County.
	Approximately 1,000 feet downstream from West 60th Street	+1431	
Cherry Creek	Approximately 70 feet downstream from South Sertoma Avenue.	+1434	City of Sioux Falls, Unincorporated Areas of Minnehaha County.
	Approximately 1,000 feet upstream from East 266th Street	+1458	
Skunk Creek	2,750 feet downstream from Interstate 29	+1422	City of Sioux Falls, Unincorporated Areas of Minnehaha County.
	Approximately 50 feet downstream from South 467th Avenue	+1459	
Willow Creek	Approximately 1,130 feet upstream from North Lamesa Drive	+1438	Unincorporated Areas of Minnehaha County, City of Sioux Falls.
	Approximately 1,300 feet upstream from Highway 38	+1475	

* National Geodetic Vertical Datum.
# Depth in feet above ground.
+ North American Vertical Datum.

ADDRESSES

City of Sioux Falls
Maps are available for inspection at 224 West 9th Street, P.O. Box 7402, Sioux Falls, SD 57117–7402.
Unincorporated Areas of Minnehaha County
Maps are available for inspection at County Administration Building, 415 N. Dakota Avenue, Sioux Falls, SD 57106.

Comal County, Texas and Incorporated Areas, FEMA Docket Nos.: B–7736 and D–7820

Alligator Creek	Approximately 4,500 feet downstream from the intersection with FM 1101 Road.	+643	City of New Braunfels.
	Intersection with Hoffman Lane	+717	
Alligator Creek Tributary No. 6	Confluence with Alligator Creek	+715	City of New Braunfels, Unincorporated Areas of Comal County.
	Intersection with FM 306	+795	
Bear Creek (Dry Comal Watershed).	Confluence of Bear Creek and Dry Comal Watershed	+730	City of Garden Ridge, Unincorporated Areas of Comal County.
	Confluence of Bear Creek and Bear Creek Tributary 14	+831	
Blieder's Creek	Intersection with River Road	+663	City of New Braunfels, Unincorporated Areas of Comal County.
	Intersection with Schoenthal Road	+892	
Bracken Tributary	Confluence with Cibolo Creek	+772	City of Garden Ridge, Unincorporated Areas of Comal County.
	Approximately 2,075 feet upstream from the intersection with Garden North Drive.	+899	
Cibolo Creek	Intersection with Lookout Road	+763	Unincorporated Areas of Comal County, City of Fair Oaks Ranch, City of Selma.
	Approximately 1.1 mile upstream from the confluence with Postoak Creek.	+1276	
Dry Comal Creek	At Altgelt Lane	+646	City of New Braunfels, Unincorporated Areas of Comal County.
	Confluence of West Fork Dry Comal Creek and Upper Comal Creek.	+780	
Garden Ridge Tributary	Confluence of HID Tributary of Garden Ridge Tributary and Garden Ridge Tributary.	+784	City of Garden Ridge, Unincorporated Areas of Comal County.
	Intersection with Water Wood Drive	+903	
Guadalupe River (Lower Reach).	Approximately 300 feet upstream from the intersection with Missouri Kansas Texas Railroad.	+634	Unincorporated Areas of Comal County.
	Confluence with Canyon Dam Emergency Spillway Channel	+760	
West Fork Tributary	Confluence with West Fork Dry Comal Creek	+799	Unincorporated Areas of Comal County.

Flooding source(s)	Location of referenced elevation	*Elevation in feet (NGVD) +Elevation in feet (NAVD) # Depth in feet above ground Modified	Communities affected
	Approximately 774 feet downstream of Schoenthal Rd.	+852	

* National Geodetic Vertical Datum.
# Depth in feet above ground.
+ North American Vertical Datum.

ADDRESSES

City of Fair Oaks Ranch
Maps are available for inspection at 7286 Dietz Elkhorn, Fair Oaks Ranch, TX 78015.
City of Garden Ridge
Maps are available for inspection at 9357 Schoenthal Road, Garden Ridge, TX 78266.
City of New Braunfels
Maps are available for inspection at 424 South Castell, New Braunfels, TX 78130.
City of Selma
Maps are available for inspection at 9375 Corporate, Selma, TX 78154.
Unincorporated Areas of Comal County
Maps are available for inspection at 195 David Jonas Drive, New Braunfels, TX 78132.

(Catalog of Federal Domestic Assistance No. 97.022, ''Flood Insurance.'')

Dated: March 13, 2009.

Michael K. Buckley,

Acting Assistant Administrator, Mitigation Directorate, Department of Homeland Security, Federal Emergency Management Agency.

[FR Doc. E9–6577 Filed 3–24–09; 8:45 am]

BILLING CODE 9110–12–P

DEPARTMENT OF HOMELAND SECURITY

Federal Emergency Management Agency

44 CFR Part 67

[Docket ID FEMA–2008–0020]

Final Flood Elevation Determinations

AGENCY: Federal Emergency Management Agency, DHS.

ACTION: Final rule.

SUMMARY: Base (1% annual chance) Flood Elevations (BFEs) and modified BFEs are made final for the communities listed below. The BFEs and modified BFEs are the basis for the floodplain management measures that each community is required either to adopt or to show evidence of being already in effect in order to qualify or remain qualified for participation in the National Flood Insurance Program (NFIP).

DATES: The date of issuance of the Flood Insurance Rate Map (FIRM) showing BFEs and modified BFEs for each community. This date may be obtained by contacting the office where the maps are available for inspection as indicated on the table below.

ADDRESSES: The final BFEs for each community are available for inspection at the office of the Chief Executive Officer of each community. The respective addresses are listed in the table below.

FOR FURTHER INFORMATION CONTACT: William R. Blanton, Jr., Engineering Management Branch, Mitigation Directorate, Federal Emergency Management Agency, 500 C Street SW., Washington, DC 20472, (202) 646–3151.

SUPPLEMENTARY INFORMATION: The Federal Emergency Management Agency (FEMA) makes the final determinations listed below for the modified BFEs for each community listed. These modified elevations have been published in newspapers of local circulation and ninety (90) days have elapsed since that publication. The Assistant Administrator of the Mitigation Directorate has resolved any appeals resulting from this notification.

This final rule is issued in accordance with section 110 of the Flood Disaster Protection Act of 1973, 42 U.S.C. 4104, and 44 CFR part 67. FEMA has developed criteria for floodplain management in floodprone areas in accordance with 44 CFR part 60.

Interested lessees and owners of real property are encouraged to review the proof Flood Insurance Study and FIRM available at the address cited below for each community. The BFEs and modified BFEs are made final in the communities listed below. Elevations at selected locations in each community are shown.

National Environmental Policy Act. This final rule is categorically excluded from the requirements of 44 CFR part 10, Environmental Consideration. An environmental impact assessment has not been prepared.

Regulatory Flexibility Act. As flood elevation determinations are not within the scope of the Regulatory Flexibility Act, 5 U.S.C. 601–612, a regulatory flexibility analysis is not required.

Regulatory Classification. This final rule is not a significant regulatory action under the criteria of section 3(f) of Executive Order 12866 of September 30, 1993, Regulatory Planning and Review, 58 FR 51735.

Executive Order 13132, Federalism. This final rule involves no policies that have federalism implications under Executive Order 13132.

Executive Order 12988, Civil Justice Reform. This final rule meets the applicable standards of Executive Order 12988.

List of Subjects in 44 CFR Part 67

Administrative practice and procedure, Flood insurance, Reporting and recordkeeping requirements.

■ Accordingly, 44 CFR part 67 is amended as follows:

PART 67—[AMENDED]

■ 1. The authority citation for part 67 continues to read as follows:

Authority: 42 U.S.C. 4001 *et seq.*; Reorganization Plan No. 3 of 1978, 3 CFR, 1978 Comp., p. 329; E.O. 12127, 44 FR 19367, 3 CFR, 1979 Comp., p. 376.

§ 67.11 [Amended]

■ 2. The tables published under the authority of § 67.11 are amended as follows:

Flooding source(s)	Location of referenced elevation	* Elevation in feet (NGVD) + Elevation in feet (NAVD) # Depth in feet above ground Modified	Communities affected
Gates County, North Carolina and Incorporated Areas Docket No.: FEMA–B–7792			
Acorn Hill Millpond	Approximately 0.5 mile downstream of U.S. Highway 158	+20	Unincorporated Areas of Gates County.
	Approximately 1.0 mile upstream of the confluence with Acorn Hill Millpond Tributary 1.	+32	
Beaverdam Creek	Approximately 0.8 mile downstream of confluence of Beaverdam Creek Tributary 1.	+12	Unincorporated Areas of Gates County.
	Approximately 1.4 miles upstream of Saunders Road (State Road 1208).	+44	
Beaverdam Creek Tributary 1	At the confluence with Beaverdam Creek	+19	Unincorporated Areas of Gates County.
	Approximately 500 feet downstream of Saunders Road (State Road 1208).	+24	
Beaverdam Creek Tributary 2	At the confluence with Beaverdam Creek	+28	Unincorporated Areas of Gates County.
	Approximately 0.7 mile upstream of the confluence with Beaverdam Creek.	+34	
Beaverdam Creek Tributary 3	At the confluence with Beaverdam Creek	+31	Unincorporated Areas of Gates County.
	Approximately 0.9 mile upstream of the confluence of Beaverdam Creek.	+38	
Bennetts Creek	Approximately 3.0 miles upstream of the confluence with Chowan River.	+7	Unincorporated Areas of Gates County, Town of Gatesville.
	At the confluence of Harrell Swamp and Raynor Swamp	+19	
Bennetts Creek Tributary 1	At the confluence with Bennetts Creek	+7	Unincorporated Areas of Gates County.
	Approximately 1.5 miles upstream of the confluence with Bennetts Creek Tributary 1A.	+12	
Bennetts Creek Tributary 10	At the confluence with Bennetts Creek	+19	Unincorporated Areas of Gates County.
	Approximately 0.6 mile upstream of Gatlin Road (State Road 1407).	+37	
Bennetts Creek Tributary 1A	At the confluence with Bennetts Creek Tributary 1	+7	Unincorporated Areas of Gates County.
	Approximately 1.2 miles upstream of the confluence with Bennetts Creek Tributary 1A1.	+16	
Bennetts Creek Tributary 1A1	At the confluence with Bennetts Creek Tributary 1A	+7	Unincorporated Areas of Gates County.
	Approximately 60 feet downstream of Hoarce Carter Road (State Road 1106).	+11	
Bennetts Creek Tributary 2	At the confluence with Bennetts Creek	+8	Unincorporated Areas of Gates County.
	Approximately 1.1 miles upstream of the confluence with Bennetts Creek.	+12	
Bennetts Creek Tributary 3	At the confluence with Bennetts Creek	+12	Unincorporated Areas of Gates County.
	Approximately 0.7 mile upstream of the confluence with Bennetts Creek.	+36	
Bennetts Creek Tributary 4	At the confluence with Bennetts Creek	+12	Unincorporated Areas of Gates County.
	Approximately 1.3 miles upstream of U.S. Highway 158	+24	
Bennetts Creek Tributary 4A	At the confluence with Bennetts Creek Tributary 4	+12	Unincorporated Areas of Gates County.
	Approximately 180 feet upstream of U.S. Highway 158	+31	
Bennetts Creek Tributary 4B	At the confluence with Bennetts Creek Tributary 4	+12	Unincorporated Areas of Gates County.
	Approximately 1,750 feet upstream of the confluence with Bennetts Creek Tributary 4.	+15	
Bennetts Creek Tributary 5	At the confluence with Bennetts Creek	+12	Unincorporated Areas of Gates County.

Flooding source(s)	Location of referenced elevation	* Elevation in feet (NGVD) + Elevation in feet (NAVD) # Depth in feet above ground Modified	Communities affected
	Approximately 0.5 mile upstream of Silver Spring Road (State Road 1404).	+31	
Bennetts Creek Tributary 5A	At the confluence with Bennetts Creek Tributary 5	+12	Unincorporated Areas of Gates County.
	Approximately 0.8 mile upstream of the confluence with Bennetts Creek Tributary 5.	+30	
Bennetts Creek Tributary 6	At the confluence with Bennetts Creek	+13	Unincorporated Areas of Gates County.
	Approximately 75 feet downstream of U.S. Highway 158	+33	
Bennetts Creek Tributary 7	At the confluence with Bennetts Creek	+15	Unincorporated Areas of Gates County.
	Approximately 900 feet upstream of Silver Spring Road (State Road 1404).	+20	
Bennetts Creek Tributary 8	At the confluence with Bennetts Creek	+15	Unincorporated Areas of Gates County.
	Approximately 650 feet downstream of Silver Spring Road (Sate Road 1404).	+21	
Bennetts Creek Tributary 9	At the confluence with Bennetts Creek	+15	Unincorporated Areas of Gates County.
	Approximately 600 feet upstream of Gatlin Road (State Road 1407).	+23	
Blackwater River	At the confluence with Chowan River	+13	Unincorporated Areas of Gates County.
	Approximately 0.6 mile upstream of the confluence with Chowan River.	+13	
Buckland Mill Branch	At the confluence with Cole Creek And Hackley Swamp	+23	Unincorporated Areas of Gates County.
	Approximately 1,600 feet upstream of Gates Bank Road (State Road 1302).	+39	
Buckland Mill Branch Tributary 1.	At the confluence with Buckland Mill Branch	+28	Unincorporated Areas of Gates County.
	Approximately 0.6 mile upstream of Willeytown Road (State Road 1304).	+31	
Buckland Mill Branch Tributary 2.	At the confluence with Buckland Mill Branch	+29	Unincorporated Areas of Gates County.
	Approximately 0.4 mile upstream of the confluence with Buckland Mill Branch.	+40	
Chowan River	Approximately 0.5 mile upstream of the confluence with Chowan River Tributary 1.	+7	Unincorporated Areas of Gates County, Town of Gatesville.
	At the confluence of Blackwater River and Nottoway River	+13	
Cole Creek	At the confluence with Sarem Creek	+7	Unincorporated Areas of Gates County.
	At the confluence of Buckland Mill Branch and Hackley Swamp.	+23	
Cole Creek Tributary 1	At the confluence with Cole Creek	+7	Unincorporated Areas of Gates County.
	Approximately 0.8 mile upstream of Turner Road (State Road 1114).	+25	
Cole Creek Tributary 2	At the confluence with Cole Creek	+8	Unincorporated Areas of Gates County.
	Approximately 780 feet upstream of U.S. Highway Business 158.	+30	
Cole Creek Tributary 3	At the confluence with Cole Creek	+9	Unincorporated Areas of Gates County.
	Approximately 0.8 mile upstream of the confluence with Cole Creek.	+17	
Cole Creek Tributary 4	At the confluence with Cole Creek	+11	Unincorporated Areas of Gates County.
	Approximately 0.6 mile upstream of the confluence with Cole Creek.	+16	
Cole Creek Tributary 5	At the confluence with Cole Creek	+12	Unincorporated Areas of Gates County.
	Approximately 550 feet upstream of U.S. Highway 158	+33	
Cole Creek Tributary 6	At the confluence with Cole Creek	+18	Unincorporated Areas of Gates County.
	Approximately 375 feet downstream of Cotton Gin Road (State Road 1315).	+24	

Flooding source(s)	Location of referenced elevation	* Elevation in feet (NGVD) + Elevation in feet (NAVD) # Depth in feet above ground Modified	Communities affected
Corapeake Swamp	Approximately 500 feet downstream of Daniels Road (State Road 1332).	+22	Unincorporated Areas of Gates County.
	At the confluence of Corapeake Swamp Tributary 1	+33	
Corapeake Swamp Tributary 1	At the confluence with Corapeake Swamp	+33	Unincorporated Areas of Gates County.
	Approximately 0.9 mile upstream of the confluence with Corapeake Swamp.	+35	
Cypress Swamp	Just upstream of NC Highway 137	+16	Unincorporated Areas of Gates County.
	Approximately 0.6 mile upstream of NC Highway 137	+16	
Duke Swamp	At the confluence with Harrell Swamp	+21	Unincorporated Areas of Gates County.
	Approximately 1.5 miles upstream of the confluence with Duke Swamp Tributary 5.	+47	
Duke Swamp Tributary 1	At the confluence with Duke Swamp	+23	Unincorporated Areas of Gates County.
	Approximately 0.6 mile upstream of the confluence with Duke Swamp.	+33	
Duke Swamp Tributary 2	At the confluence with Duke Swamp	+24	Unincorporated Areas of Gates County.
	Approximately 240 feet downstream of NC Highway 32	+37	
Duke Swamp Tributary 3	At the confluence with Duke Swamp	+25	Unincorporated Areas of Gates County.
	Approximately 0.8 mile upstream of the confluence with Duke Swamp.	+28	
Duke Swamp Tributary 4	At the confluence with Duke Swamp	+27	Unincorporated Areas of Gates County.
	Approximately 0.8 mile upstream of Union Branch Road (State Road 1305).	+31	
Duke Swamp Tributary 5	At the confluence with Duke Swamp	+37	Unincorporated Areas of Gates County.
	Approximately 1,000 feet upstream of Drum Hill Road (State Road 1308).	+49	
Ellis Swamp	At the confluence with Jady Branch	+22	Unincorporated Areas of Gates County.
	Approximately 300 feet upstream of Corner High Road (State Road 1126).	+22	
Ellis Swamp Tributary 1	At the confluence with Ellis Swamp	+22	Unincorporated Areas of Gates County.
	Approximately 1.3 miles upstream of the confluence with Ellis Swamp.	+24	
Flat Branch	At the confluence with Hackley Swamp	+24	Unincorporated Areas of Gates County.
	Approximately 150 feet downstream of U.S. Highway 13	+34	
Folly Swamp	Approximately 1.5 miles downstream of NC Highway 32	+26	Unincorporated Areas of Gates County.
	Approximately 1.9 miles upstream of the confluence with Folly Swamp Tributary 1.	+38	
Folly Swamp Tributary 1	At the confluence with Folly Swamp	+31	Unincorporated Areas of Gates County.
	Approximately 1,750 feet upstream of Maryland Lane	+38	
Goodman Swamp	At the confluence with Duke Swamp	+31	Unincorporated Areas of Gates County.
	Approximately 1.3 miles upstream of the confluence of Goodman Swamp Tributary 2.	+47	
Goodman Swamp Tributary 1	At the confluence with Goodman Swamp	+34	Unincorporated Areas of Gates County.
	Approximately 0.7 mile upstream of Union Branch Road (State Road 1305).	+41	
Goodman Swamp Tributary 2	At the confluence with Goodman Swamp	+36	Unincorporated Areas of Gates County.
	Approximately 1.0 mile upstream of Union Branch Road (State Road 1305).	+48	
Goose Creek	Approximately 0.7 mile downstream of Folly Road (State Road 1002).	+25	Unincorporated Areas of Gates County.
	Approximately 1.3 miles upstream of the confluence of Goose Creek Tributary 1.	+36	

Flooding source(s)	Location of referenced elevation	* Elevation in feet (NGVD) + Elevation in feet (NAVD) # Depth in feet above ground Modified	Communities affected
Goose Creek Tributary 1	At the confluence with Goose Creek	+33	Unincorporated Areas of Gates County.
	Approximately 0.9 mile upstream of the confluence with Goose Creek.	+40	
Gum Branch	Approximately 500 feet upstream of the confluence with Jady Branch.	+11	Unincorporated Areas of Gates County.
	Approximately 0.8 mile upstream of Taylor Mill Road (State Road 1118).	+24	
Hackley Swamp	At the confluence with Cole Creek and Buckland Mill Branch.	+23	Unincorporated Areas of Gates County.
	Approximately 0.8 mile upstream of Gates School Road (State Road 1202).	+39	
Hackley Swamp Tributary 1	At the confluence with Hackley Swamp	+26	Unincorporated Areas of Gates County.
	Approximately 0.5 mile upstream of Sarem Road (State Road 1219).	+33	
Harrell Swamp	At the confluence with Bennetts Creek and Raynor Swamp.	+19	Unincorporated Areas of Gates County.
	Approximately 0.8 mile upstream of the confluence of Duke Swamp.	+25	
Jady Branch	Just upstream of NC Highway 137	+19	Unincorporated Areas of Gates County.
	Approximately 0.5 mile upstream of Hill Lane Road (State Road 1122).	+24	
Jernigan Branch	At the confluence with Somerton Creek	+12	Unincorporated Areas of Gates County.
	Approximately 3.1 miles upstream of Gatlington Road (State Road 1302).	+31	
Licking Branch	At the confluence with Jady Branch	+19	Unincorporated Areas of Gates County.
	Approximately 0.5 mile upstream of Hill Lane Road (State Road 1122).	+26	
Middle Swamp	At the confluence with Duke Swamp	+27	Unincorporated Areas of Gates County.
	Approximately 0.5 mile upstream of Black Mingle Road (State Road 1312).	+32	
Mill Branch	At the confluence with Buckland Mill Branch	+35	Unincorporated Areas of Gates County.
	Approximately 500 feet upstream of Paige Riddick Road (State Road 1330).	+47	
Mill Swamp	Approximately 2.0 miles downstream of U.S. Highway 13	+28	Unincorporated Areas of Gates County.
	Approximately 400 feet upstream of Drum Hill Road (State Road 1308).	+48	
Mill Swamp Tributary 1	At the North Carolina/Virginia boundary	+25	Unincorporated Areas of Gates County.
	Approximately 0.5 mile upstream of North Carolina/Virginia boundary.	+39	
Mill Swamp Tributary 2	At the confluence with Mill Swamp	+40	Unincorporated Areas of Gates County.
	Approximately 1.3 miles upstream of the confluence with Mill Swamp Tributary 2A.	+49	
Mill Swamp Tributary 2A	At the confluence with Mill Swamp Tributary 2	+40	Unincorporated Areas of Gates County.
	Approximately 800 feet downstream of Paige Riddick Road (State Road 1330).	+42	
Mill Swamp Tributary 3	At the confluence with Mill Swamp	+41	Unincorporated Areas of Gates County.
	Approximately 950 feet upstream of Mallory Buck Road (State Road 1309).	+52	
Perquimans River	Approximately 0.7 mile downstream of the Gates/Perquimans County boundary.	+11	Unincorporated Areas of Gates County.
	Approximately 390 feet upstream of the Gates/Perquimans County boundary.	+11	
Raynor Swamp	At the confluence with Bennetts Creek and Harrell Swamp	+19	Unincorporated Areas of Gates County.
	Approximately 0.4 mile upstream of the confluence with Raynor Swamp Tributary 6.	+39	

Flooding source(s)	Location of referenced elevation	* Elevation in feet (NGVD) + Elevation in feet (NAVD) # Depth in feet above ground Modified	Communities affected
Raynor Swamp Tributary 1	At the confluence with Raynor Swamp	+19	Unincorporated Areas of Gates County.
	Approximately 0.6 mile upstream of Silver Spring Lane (State Road 1404).	+36	
Raynor Swamp Tributary 2	At the confluence with Raynor Swamp	+24	Unincorporated Areas of Gates County.
	Approximately 865 feet upstream of St. Paul Road (State Road 1338).	+35	
Raynor Swamp Tributary 2A	At the confluence with Raynor Swamp Tributary 2	+28	Unincorporated Areas of Gates County.
	Approximately 1.1 miles upstream of the confluence with Raynor Swamp Tributary 2.	+38	
Raynor Swamp Tributary 3	At the confluence with Raynor Swamp	+27	Unincorporated Areas of Gates County.
	Approximately 0.7 mile upstream of Sugar Run Road (State Road 1429).	+36	
Raynor Swamp Tributary 4	At the confluence with Raynor Swamp	+28	Unincorporated Areas of Gates County.
	Approximately 0.7 mile upstream of the confluence with Raynor Swamp.	+31	
Raynor Swamp Tributary 5	At the confluence with Raynor Swamp	+31	Unincorporated Areas of Gates County.
	Approximately 1,360 feet upstream of Kees Cross Road (State Road 1427).	+35	
Raynor Swamp Tributary 6	At the confluence with Raynor Swamp	+37	Unincorporated Areas of Gates County.
	Approximately 0.5 mile upstream of the confluence with Raynor Swamp.	+41	
Sarem Creek	At the confluence with Chowan River	+7	Unincorporated Areas of Gates County.
	At the confluence with Jady Branch	+10	
Somerton Creek	At the confluence with Chowan River	+12	Unincorporated Areas of Gates County.
	Approximately 1.8 miles upstream of the confluence of Jernigan Branch.	+12	
Taylor Mill Pond	At the confluence with Jady Branch	+22	Unincorporated Areas of Gates County.
	Approximately 50 feet downstream of Hill Lane Road (State Road 1122).	+22	
Taylor Swamp	At the confluence with Corapeake Swamp	+29	Unincorporated Areas of Gates County.
	Approximately 1,130 feet upstream of Brinkley Road (State Road 1307).	+39	
Taylor Swamp Tributary 1	At the confluence with Taylor Swamp	+30	Unincorporated Areas of Gates County.
	Approximately 1.0 mile upstream of the confluence with Taylor Swamp.	+34	
Trotman Creek	Approximately 350 feet downstream of Carters Road (State Road 1100).	+7	Unincorporated Areas of Gates County.
	Approximately 0.5 mile upstream of Hobbsville Road (State Road 1414).	+33	
Trotman Creek Tributary	At the confluence with Trotman Creek	+10	Unincorporated Areas of Gates County.
	Approximately 0.4 mile upstream from the confluence with Trotman Creek.	+13	
Walton Pond	At the confluence with Trotman Creek	+8	Unincorporated Areas of Gates County.
	Approximately 0.8 mile upstream of NC Highway 37	+22	

* National Geodetic Vertical Datum.
+ North American Vertical Datum.
# Depth in feet above ground.

ADDRESSES

Town of Gatesville

Maps are available for inspection at Gatesville Town Hall, 127 Main Street, Gatesville, North Carolina.

Flooding source(s)	Location of referenced elevation	* Elevation in feet (NGVD) + Elevation in feet (NAVD) # Depth in feet above ground Modified	Communities affected
Unincorporated Areas of Gates County			
Maps are available for inspection at Gates County Building Inspection Office, 105 New Ferry Road, Gatesville, North Carolina.			
Summit County, Ohio, and Incorporated Areas FEMA Docket No.: B–7773			
Brandywine Creek	Approximately 2,700 feet above confluence with Cuyahoga River.	+649	Unincorporated Areas of Summit County, City of Macedonia, Village of Boston Heights, Village of Hudson.
	Approximately 100 feet upstream Ashley Drive	+1093	
Brandywine Creek Tributary	Approximately 500 feet downstream of Prospect Street	+1033	Village of Hudson.
	Approximately 900 feet upstream of Ravenna Street	+1070	
Brandywine Creek Tributary 5	At confluence with Brandywine Creek	+965	City of Macedonia.
	Approximately 2,200 feet above confluence with Brandywine Creek.	+969	
Brandywine Creek Tributary Overflow.	Approximately 450 feet above Boston Mills Road	+1025	Village of Hudson.
	Approximately 100 feet downstream from divergence from Brandywine Creek Tributary.	+1053	
Indian Creek	At confluence with Brandywine Creek	+959	Unincorporated Areas of Summit County, City of Macedonia
	Approximately 3,700 feet upstream of Ledge Road	+1031	
Indian Creek Tributary 3	At confluence with Indian Creek	+1010	City of Macedonia.
	Approximately 1,700 feet upstream of Ledge Road	+1016	
Indian Creek Tributary 4	Mouth at Indian Creek	+977	City of Macedonia.
	Approximately 760 feet upstream of Bedford Road	+986	
Mud Brook	At mouth at Cuyahoga River	+748	City of Akron, City of Cuyahoga Falls, City of Stow, Village of Hudson.
	Approximately 3,400 feet upstream of Streetsboro Road	+999	
Mud Brook Tributary 1	At confluence with Mud Brook	+985	City of Stow.
	Approximately 2,480 feet upstream of Hudson Street	+988	
Mud Brook Tributary 1B	At confluence with Mud Brook Tributary 1	+986	Village of Silver Lake, City of Stow.
	Approximately 100 feet upstream of Carter Lumber Drive	+999	
Mud Brook Tributary 3	Approximately 1,300 feet downstream of Allen Road	+991	City of Stow.
	Approximately 700 feet upstream of Allen Road	+1006	
North Fork Yellow Creek	Just downstream of Granger Road	+913	Unincorporated Areas of Summit County.
	Approximately 75 feet upstream of Bath Road	+951	
North Fork Yellow Creek Tributary.	Approximately 100 feet above confluence with North Fork Yellow Creek.	+923	Unincorporated Areas of Summit County.
	Approximately 100 feet upstream of Bath Road	+977	
Powers Brook	Approximately 100 feet downstream of Railroad	+1001	Village of Hudson, City of Stow.
	Approximately 100 feet upstream of Norton Road	+1074	
Powers Brook Tributary 2	At confluence with Powers Brook	+1051	City of Stow.
	Approximately 1,120 feet upstream of Stow Road	+1058	
Yellow Creek	Approximately 550 feet downstream of Riverview Road	+735	Unincorporated Areas of Summit County, City of Akron, City of Cuyahoga Falls.
	Approximately 50 feet upstream of Medina Line Road	+1066	
Yellow Creek Overflow	Approximately 70 feet above confluence with Yellow Creek.	+1039	Unincorporated Areas of Summit County.
	Approximately 1,600 feet above confluence with Yellow Creek.	+1050	

* National Geodetic Vertical Datum.
+ North American Vertical Datum.
# Depth in feet above ground.

ADDRESSES

City of Akron

Maps are available for inspection at 166 South High Street, Suite 100, Akron, OH 44308.

City of Cuyahoga Falls

Flooding source(s)	Location of referenced elevation	* Elevation in feet (NGVD) + Elevation in feet (NAVD) # Depth in feet above ground Modified	Communities affected

Maps are available for inspection at 2310 Second Street, Cuyahoga Falls, OH 44221.

City of Macedonia

Maps are available for inspection at 9691 Valley View Road, Macedonia, OH 44056.

City of Stow

Maps are available for inspection at 3760 Darrow Road, Stow, OH 44224.

Unincorporated Areas of Summit County

Maps are available for inspection at 1030 East Tallmadge Avenue, Akron, OH 44310.

Village of Boston Heights

Maps are available for inspection at 5595 Transportation Boulevard, Suite 100, Hudson, OH 44236.

Village of Hudson

Maps are available for inspection at 27 East Main Street, Hudson, OH 44236.

Village of Silver Lake

Maps are available for inspection at 2961 Kent Road, Silver Lake, OH 44224.

Comanche County, Oklahoma, and Incorporated Areas
FEMA Docket No.: B–7753

East Branch Wolf Creek	Approximately 3435 feet downstream from intersection with Cache Road.	+1121	Unincorporated Areas of Comanche County, City of Lawton.
	Approximately 145 feet downstream from intersection with Interstate 62.	+1142	
East Cache Creek	Approximately 1390 feet downstream from intersection with SE Coombs Rd.	+1060	Unincorporated Areas of Comanche County, City of Lawton.
	Approximately 2930 feet downstream from confluence with Wratton Creek.	+1090	
East Cache Creek Tributary A	At confluence with East Cache Tributary A–1	+1076	City of Lawton.
	Approximately 2190 feet upstream from intersection with Flower Mound Rd.	+1133	
East Cache Creek Tributary B	Approximately 5275 feet upstream from confluence with East Cache Creek.	+1077	City of Lawton.
	Approximately 4090 feet upstream from intersection with Flower Mound Rd.	+1112	
Meadowbrook Creek	Approximately 137 feet downstream from intersection Meadow Brook Dr.	+1124	City of Lawton.
	Approximately 2230 feet upstream from intersection with Northwest Creek Hollar Dr.	+1170	
Mission Creek	Approximately 6088 feet downstream from intersection with Lawrie Tatum Rd.	+1090	City of Lawton.
	Approximately 110 feet upstream from intersection with Interstate 62.	+1134	
Nine Mile Creek Tributary	Approximately 170 feet upstream from intersection with Highway 7.	+1131	Unincorporated Areas of Comanche County, City of Lawton.
	Approximately 2665 feet downstream from intersection with NE Cache Rd.	+1171	
Squaw Creek	Approximately 127 feet upstream from intersection with Highway 44.	+1072	Unincorporated Areas of Comanche County, City of Lawton
	Approximately 1015 feet downstream from intersection with NW Denver Avenue.	+1161	
Squaw Creek East Tributary B	Approximately at the intersection of Avenue I and 11 Street.	+1099	City of Lawton.
	Approximately 220 feet downstream from intersection with Dearborn Avenue.	+1134	
West Branch Squaw Creek	Approximately 245 feet downstream from intersection with Arbuckle Avenue.	+1078	Unincorporated Areas of Comanche County, City of Lawton.
	Approximately 1743 upstream from confluence with West Branch Squaw Creek Tributary 4.	+1107	
West Branch Wolf Creek	Approximately 710 feet downstream from intersection with 53rd Street.	+1119	Unincorporated Areas of Comanche County, City of Lawton.
	Approximately 255 feet downstream from intersection with NW Roger Lane.	+1226	

Flooding source(s)	Location of referenced elevation	* Elevation in feet (NGVD) + Elevation in feet (NAVD) # Depth in feet above ground Modified	Communities affected
West Branch Wolf Creek Tributary A.	Approximately 1092 feet upstream from confluence with West Branch Wolf Creek.	+1128	City of Lawton.
	At the intersection with Cache Rd	+1178	
West Branch Wolf Creek Tributary B.	Approximately 5750 feet upstream from confluence with West Branch Wolf Creek.	+1180	City of Lawton.
	Approximately 144 feet downstream from intersection with NW Rogers Lane.	+1265	
Wolf Creek	Approximately 887 feet downstream from intersection with Highway 44.	+1058	Unincorporated Areas of Comanche County, City of Lawton.
	Approximately 1050 feet downstream from intersection with Lee Boulevard.	+1094	
Wratton Creek	Approximately 411 feet downstream from intersection with Wratton Creek Tributary.	+1102	Unincorporated Areas of Comanche County, City of Lawton.
	Approximately 5447 feet upstream from intersection with Flower Mound Rd.	+1122	
Wratton Creek Tributary	At the intersection with Flower Mound Rd	+1111	City of Lawton.
	Approximately 9175 feet upstream from intersection with Flower Mound Rd.	+1143	

* National Geodetic Vertical Datum.
+ North American Vertical Datum.
# Depth in feet above ground.

ADDRESSES

City of Lawton

Maps are available for inspection at City Hall, 103 Southwest 4th Street, Lawton, OK 73501.

Unincorporated Areas of Comanche County

Maps are available for inspection at Comanche County. Court House, 315 SW., 5th Street, Lawton, OK 73501.

(Catalog of Federal Domestic Assistance No. 97.022, ''Flood Insurance.'')

Dated: February 6, 2009.

Michael K. Buckley,

Acting Assistant Administrator, Mitigation Directorate, Department of Homeland Security, Federal Emergency Management Agency.

[FR Doc. E9–6680 Filed 3–24–09; 8:45 am]

BILLING CODE 9110–12–P

DEPARTMENT OF HOMELAND SECURITY

Federal Emergency Management Agency

44 CFR Part 67

[Docket ID FEMA–2008–0020]

Final Flood Elevation Determinations

AGENCY: Federal Emergency Management Agency, DHS.

ACTION: Final rule.

SUMMARY: Base (1% annual chance) Flood Elevations (BFEs) and modified BFEs are made final for the communities listed below. The BFEs and modified BFEs are the basis for the floodplain management measures that each community is required either to adopt or to show evidence of being already in effect in order to qualify or remain qualified for participation in the National Flood Insurance Program (NFIP).

DATES: The date of issuance of the Flood Insurance Rate Map (FIRM) showing BFEs and modified BFEs for each community. This date may be obtained by contacting the office where the maps are available for inspection as indicated on the table below.

ADDRESSES: The final BFEs for each community are available for inspection at the office of the Chief Executive Officer of each community. The respective addresses are listed in the table below.

FOR FURTHER INFORMATION CONTACT: William R. Blanton, Jr., Engineering Management Branch, Mitigation Directorate, Federal Emergency Management Agency, 500 C Street, SW., Washington, DC 20472, (202) 646–3151.

SUPPLEMENTARY INFORMATION: The Federal Emergency Management Agency (FEMA) makes the final determinations listed below for the modified BFEs for each community listed. These modified elevations have been published in newspapers of local circulation and ninety (90) days have elapsed since that publication. The Assistant Administrator of the Mitigation Directorate has resolved any appeals resulting from this notification.

This final rule is issued in accordance with section 110 of the Flood Disaster Protection Act of 1973, 42 U.S.C. 4104, and 44 CFR part 67. FEMA has developed criteria for floodplain management in floodprone areas in accordance with 44 CFR part 60.

Interested lessees and owners of real property are encouraged to review the proof Flood Insurance Study and FIRM available at the address cited below for each community.

The BFEs and modified BFEs are made final in the communities listed below. Elevations at selected locations in each community are shown.

National Environmental Policy Act. This final rule is categorically excluded from the requirements of 44 CFR part 10, Environmental Consideration. An environmental impact assessment has not been prepared.

Regulatory Flexibility Act. As flood elevation determinations are not within the scope of the Regulatory Flexibility

Act, 5 U.S.C. 601–612, a regulatory flexibility analysis is not required.

Regulatory Classification. This final rule is not a significant regulatory action under the criteria of section 3(f) of Executive Order 12866 of September 30, 1993, Regulatory Planning and Review, 58 FR 51735.

Executive Order 13132, Federalism. This final rule involves no policies that have federalism implications under Executive Order 13132.

Executive Order 12988, Civil Justice Reform. This final rule meets the applicable standards of Executive Order 12988.

List of Subjects in 44 CFR Part 67

Administrative practice and procedure, Flood insurance, Reporting and recordkeeping requirements.

■ Accordingly, 44 CFR part 67 is amended as follows:

PART 67—[AMENDED]

■ 1. The authority citation for part 67 continues to read as follows:

Authority: 42 U.S.C. 4001 *et seq.*; Reorganization Plan No. 3 of 1978, 3 CFR, 1978 Comp., p. 329; E.O. 12127, 44 FR 19367, 3 CFR, 1979 Comp., p. 376.

§ 67.11 [Amended]

■ 2. The tables published under the authority of § 67.11 are amended as follows:

State	City/town/county	Source of flooding	Location	* Elevation in feet (NGVD) + Elevation in feet (NAVD) # Depth in feet above ground Modified
Ashland County, Ohio FEMA Docket No.: B–7795				
Ohio	Ashland County	Lang Creek	Approximately 200 feet upstream of eastern corporate limit of the City of Ashland.	+983
			At Orange Street	+990
Ohio	Ashland County	Town Run	Approximately 410 feet downstream of Brookside Golf Course Drive.	+1,126
			At Brookside Golf Course Drive	+1,144

* National Geodetic Vertical Datum.
+ North American Vertical Datum.
# Depth in feet above ground.

ADDRESSES

Ashland County
Maps are available for inspection at 110 Cottage Street, Ashland, OH 44805.

Flooding source(s)	Location of referenced elevation	* Elevation in feet (NGVD) + Elevation in feet (NAVD) # Depth in feet above ground Modified	Communities affected
Leon County, Florida, and Incorporated Areas FEMA Docket No.: B–7781			
East Drainage Ditch	Approximately 400 feet upstream of South Blair Stone Road.	+90	City of Tallahassee.
	Approximately 1,000 feet upstream of Paul Russell Road	+94	
Indianhead Branch 2	Just downstream of Putnam Drive	+63	City of Tallahassee.
	Just upstream of East Magnolia Drive	+67	
Northeast Drainage Ditch Tributary 1.	Approximately 200 feet upstream of the confluence of Northeast Drainage Ditch.	+91	City of Tallahassee.
	Just downstream of Lonnbladh Road	+95	
Northeast Drainage Ditch Tributary 2.	Approximately 450 feet upstream of the confluence of Northeast Drainage Ditch.	+60	City of Tallahassee.
	Just upstream of U.S. Route 319	+95	

* National Geodetic Vertical Datum.
+ North American Vertical Datum.
# Depth in feet above ground.

ADDRESSES

City of Tallahassee
Maps are available for inspection at Tallahassee City Hall, 300 South Adams Street, Tallahassee, FL.

Pinellas County, Florida, and Incorporated Areas FEMA Docket No.: B–7794			
Channel 1	Approximately 160 feet downstream of 90th Avenue N	+11	City of Pinellas Park, Unincorporated Areas of Pinellas County.

Flooding source(s)	Location of referenced elevation	* Elevation in feet (NGVD) + Elevation in feet (NAVD) # Depth in feet above ground Modified	Communities affected
	Approximately 1,980 feet upstream of 102nd Avenue N	+14	
Channel 2	Approximately 290 feet upstream of Gandy Boulevard	+10	City of Pinellas Park.
	Just downstream of Highway 19	+12	
Channel 3	At 68th Avenue N	+10	Unincorporated Areas of Pinellas County, City of Pinellas Park.
	Just downstream of 49th Street N	+17	
Joe's Creek Tributary 4 (Channel 4).	Approximately 2,400 feet upstream of the confluence with Joe's Creek.	+12	City of Pinellas Park, Unincorporated Areas of Pinellas County.
	Approximately 1,000 feet upstream of 62nd Street N	+28	
Lake Parcel	Flooding area bound by 96th Terrace N to the north, 34th Way N to the west, Gateway Boulevard to the south, and MCI Drive to the east.	+9	City of Pinellas Park.
	Flooding area bound by 97th Avenue N to the north, 37th Street N to the west, 93rd Avenue N to the south, and Mainlands Boulevard E to the east.	+10	
Lake Tamarac	Flooding area bound by Mainlands Boulevard N to the north, Mainlands Boulevard W to the west, 96th Terrace Lane N to the south, and 41st Street N to the east.	+11	City of Pinellas Park.
Ponding Area	Ponding area bound by 102nd Avenue N to the north, 64th Street N to the west, 98th Avenue N to the south, and 62nd Street N to the east.	+14	City of Pinellas Park.
	Ponding area bound by 99 Circle N to the north, 66th Street N to the west, 94th Avenue N to the south, and 61st Way N to the east.	+13	
	Ponding area bound by 94th Avenue N to the north, 66th Street N to the west, 90th Avenue N to the south, and 62nd Street N to the east.	+13	
	Ponding area bound by CSX Railroad to the north, 63rd Way N to the west, 82nd Avenue N to the south, and CSX Railroad to the east.	+12	
	Ponding area bound by 86th Avenue N to the north, CSX Railroad to the west, 82nd Avenue N to the south, and 62nd Street N to the east.	+11	
	Ponding area bound by 82nd Avenue N to the north, 63rd Street N to the west, 80th Avenue N to the south, and 61st Lane N to the east.	+13	
	Ponding area bound by 80th Avenue N to the north, 62nd Street N to the west, 78th Avenue N to the south, and 60th Street N to the east.	+12	
	Ponding area bound by 102nd Avenue N to the north, Highway 19 to the west, Highway 19 to the south, and 45th Way N to the east.	+12	
	Ponding area bound by Mainlands Boulevard N to the north, 41st Street N to the west, 96th Terrace N to the south, and 40th Street N to the east.	+11	
	Ponding area bound by Mainlands Boulevard W to the north, Highway 19 to the west, Gateway Boulevard to the south, and 40th Street N to the east.	+11	
	Ponding area bound by 86th Avenue N to the north, 44th Street N to the west, 78th Avenue N to the south, and Highway 19 to the east.	+14	
	Ponding area bound by Highway 19 to the north, 46th Street N to the west, 85th Terrace N to the south, and Highway 19 to the east.	+11	
	Ponding area bound by 94th Avenue N to the north, 49th Street N to the west, 86th Avenue N to the south, and Highway 19 to the east.	+12	
	Ponding area bound by 94th Avenue N to the north, 49th Street N to the west, 90th Avenue N to the south, and Highway 19 to the east.	+12	
	Ponding area bound by 82nd Avenue N to the north, 52nd Street N to the west, 78th Avenue N to the south, and 47th Street N to the east.	+14	
	Ponding area bound by 87th Terrace N to the north, 53rd Way N to the west, 82nd Terrace N to the south, and 52nd Way N to the east.	+11	

Flooding source(s)	Location of referenced elevation	* Elevation in feet (NGVD) + Elevation in feet (NAVD) # Depth in feet above ground Modified	Communities affected
	Ponding area bound by 86th Avenue N to the north, 60th Street N to the west, 78th Avenue N to the south, and 52nd Street N to the east.	+13	
	Ponding area bound by 70th Avenue N to the north, 65th Street N to the west, 67th Avenue N to the south, and 63rd Way N to the east.	+15	
	Ponding area bound by 80th Avenue N to the north, 47th Street N to the west, Park Boulevard N to the south, and 40th Street N to the east.	+15	
	Ponding area bound by Park Boulevard N to the north, CSX Railroad to the west, 68th Avenue N to the south, and 41st Street N to the east.	+16	
	Ponding area bound by 76th Avenue N, 56th Street N to the west, 71st Avenue N to the south, and 52nd Street N to the east.	+15	
	Ponding area bound by 68th Avenue N to the north, 51st Way N to the west, 65th Avenue N to the south, and 49th Way N to the east.	+15	
	Ponding area bound by 66th Avenue N to the north, 47th Street N to the west, 58th Avenue N to the south, and 35th Street N to the east.	+27	
	Ponding area bound by Gateway Center Parkway to the north, 34th Street N to the west, Grand Avenue to the south, and 28th Street N to the east.	+10	
	Ponding area bounded by Gateway Boulevard to the north, 37th Street to the west, Grand Avenue to the south, and Gateway Center Parkway to the east.	+10	
	Ponding area bound by Mainlands Boulevard N to the north, 40th Street N to the west, 99th Terrace N to the south, and 38th Way N to the east.	+11	
	Ponding area bound by 103rd Avenue N to the north, 39th Street N to the west, 101st Avenue N to the south, and 36th Court to the east.	+10	
	Ponding area bound by 99th Place N to the north, Mainlands Boulevard E to the west, 98th Terrace N to the south, and 34th Way N to the east.	+10	
Ponding Area	Ponding area bound by 62nd Avenue N to the north, 66th Street N to the west, 54th Avenue N to the south, and 54th Street N to the east.	+14	Unincorporated Areas of Pinellas County.
	Ponding area bound by 54th Avenue N to the north, 69th Way N to the west, 49th Avenue N to the south, and 68th Way N to the east.	+15	

* National Geodetic Vertical Datum.
+ North American Vertical Datum.
# Depth in feet above ground.

ADDRESSES

City of Pinellas Park

Maps are available for inspection at Pinellas Park City Hall, 5141 78th Avenue, Pinellas Park, FL 33781.

Unincorporated Areas of Pinellas County

Maps are available for inspection at Pinellas County Development Review, 310 Court Street, Clearwater, FL 33756.

Douglas County, Georgia, and Incorporated Areas
FEMA Docket No.: B–7753

Alexander Branch	At confluence with Bear Creek	+957	Unincorporated Areas of Douglas County.
	Approximately 3,630 feet upstream of the confluence of Alexander Branch Tributary B.	+1,094	
Alexander Branch Tributary A	At confluence with Alexander Branch	+1,000	Unincorporated Areas of Douglas County.
	Approximately 1,080 feet upstream of Cougar Trail	+1,040	
Alexander Branch Tributary B	At confluence with Alexander Branch	+1,026	Unincorporated Areas of Douglas County.
	Approximately 1,030 feet upstream of confluence with Alexander Branch.	+1,060	
Amber Creek	At confluence with Anneewakee Creek	+789	Unincorporated Areas of Douglas County.

Flooding source(s)	Location of referenced elevation	* Elevation in feet (NGVD) + Elevation in feet (NAVD) # Depth in feet above ground Modified	Communities affected
	Approximately 4,610 feet upstream of Jan Drive	+934	
Amber Creek Tributary A	At confluence with Amber Creek	+823	Unincorporated Areas of Douglas County.
	Approximately 2,540 feet upstream of Jan Drive	+902	
Anneewakee Creek	Approximately 670 feet upstream of State Highway 166	+747	Unincorporated Areas of Douglas County, City of Douglasville.
	Approximately 2,480 feet upstream of the confluence of Anneewakee Creek Tributary L.	+1,147	
Anneewakee Creek Tributary A	At confluence with Anneewakee Creek	+747	Unincorporated Areas of Douglas County.
	Approximately 2,880 feet upstream of confluence with Anneewakee Creek.	+799	
Anneewakee Creek Tributary B	At confluence with Anneewakee Creek	+747	Unincorporated Areas of Douglas County.
	Approximately 2,320 feet upstream of confluence with Anneewakee Creek.	+811	
Anneewakee Creek Tributary C	At confluence with Anneewakee Creek	+776	Unincorporated Areas of Douglas County.
	Approximately 1,400 feet upstream of confluence with Anneewakee Creek.	+866	
Anneewakee Creek Tributary D	At confluence with Anneewakee Creek	+844	Unincorporated Areas of Douglas County.
	Approximately 2,150 feet upstream of confluence with Anneewakee Creek.	+906	
Anneewakee Creek Tributary E	At confluence with Anneewakee Creek	+873	Unincorporated Areas of Douglas County.
	Approximately 2,910 feet upstream of confluence with Anneewakee Creek.	+894	
Anneewakee Creek Tributary F	At confluence with Anneewakee Creek	+879	Unincorporated Areas of Douglas County.
	Approximately 4,000 feet upstream of confluence with Anneewakee Creek.	+913	
Anneewakee Creek Tributary G	At confluence with Anneewakee Creek	+892	Unincorporated Areas of Douglas County.
	Approximately 4,270 feet upstream of confluence with Anneewakee Creek.	+980	
Anneewakee Creek Tributary H	At confluence with Anneewakee Creek	+894	Unincorporated Areas of Douglas County, City of Douglasville.
	Approximately 2,450 feet upstream of confluence with Anneewakee Creek.	+915	
Anneewakee Creek Tributary I	At confluence with Anneewakee Creek	+895	Unincorporated Areas of Douglas County.
	Approximately 840 feet upstream of Warren Road	+948	
Anneewakee Creek Tributary J	At confluence with Anneewakee Creek	+945	Unincorporated Areas of Douglas County, City of Douglasville.
	Approximately 2,690 feet upstream of confluence with Anneewakee Creek.	+1010	
Anneewakee Creek Tributary K	At confluence with Anneewakee Creek	+1,063	City of Douglasville.
	Approximately 1,560 feet upstream of Rose Lake Circle	+1,128	
Anneewakee Creek Tributary L	At confluence with Anneewakee Creek	+1,108	City of Douglasville.
	Approximately 300 feet upstream of Gurley Road	+1,131	
Arbor Branch	At confluence with Anneewakee Creek	+995	Unincorporated Areas of Douglas County, City of Douglasville.
	Approximately 160 feet upstream of Pine Lane	+1,125	
Arbor Branch Tributary A	At confluence with Arbor Branch	+1,084	City of Douglasville.
	Approximately 1,310 feet upstream of Interstate Highway 20/Tom Murphy Freeway.	+1,127	
Austin Creek	At confluence with Anneewakee Creek	+935	Unincorporated Areas of Douglas County.
	Approximately 210 feet upstream of Mill Glen Drive	+1,083	
Baldwin Creek	At confluence with Little Bear Creek	+763	Unincorporated Areas of Douglas County.
	Approximately 820 feet upstream of North Bear Drive	+1,049	

Flooding source(s)	Location of referenced elevation	* Elevation in feet (NGVD) + Elevation in feet (NAVD) # Depth in feet above ground Modified	Communities affected
Baldwin Creek Tributary A	At confluence with Baldwin Creek	+941	Unincorporated Areas of Douglas County.
	Approximately 2,450 feet upstream of Dorsett Shoals Road.	+1,084	
Bear Creek	Approximately 300 feet upstream of confluence with Chattahoochee River.	+741	Unincorporated Areas of Douglas County.
	Approximately 630 feet upstream of Ridge Way	+1,128	
Bear Creek Tributary A	At confluence with Bear Creek	+741	Unincorporated Areas of Douglas County.
	Approximately 1,190 feet upstream of confluence with Bear Creek.	+752	
Bear Creek Tributary B	At confluence with Bear Creek	+741	Unincorporated Areas of Douglas County.
	Approximately 530 feet upstream of State Highway 166	+780	
Bear Creek Tributary C	At confluence with Bear Creek	+756	Unincorporated Areas of Douglas County.
	Approximately 390 feet upstream of Fouts Mill Road	+782	
Bear Creek Tributary D	At confluence with Bear Creek	+761	Unincorporated Areas of Douglas County.
	Approximately 420 feet upstream of Fox Glove Court	+820	
Bear Creek Tributary E	At confluence with Bear Creek	+774	Unincorporated Areas of Douglas County.
	Approximately 2,140 feet upstream of confluence with Bear Creek.	+827	
Bear Creek Tributary F	At confluence with Bear Creek	+818	Unincorporated Areas of Douglas County.
	Approximately 400 feet upstream of Yorktown Road	+901	
Bear Creek Tributary G	At confluence with Bear Creek	+822	Unincorporated Areas of Douglas County.
	Approximately 330 feet upstream of Kings Highway	+967	
Bomar Branch	Approximately 50 feet upstream of confluence with Anneewakee Creek.	+881	Unincorporated Areas of Douglas County.
	Approximately 230 feet upstream of Appaloosa Trail	+939	
Chapel Farms Creek	At confluence with Anneewakee Creek	+769	Unincorporated Areas of Douglas County.
	Approximately 760 feet upstream of confluence of Chapel Farms Creek Tributary A.	+917	
Chapel Farms Creek Tributary A.	At confluence with Chapel Farms Creek	+908	Unincorporated Areas of Douglas County.
	Approximately 1,020 feet upstream of confluence with Chapel Farms Creek.	+920	
Coursey Creek	At confluence with Little Bear Creek	+813	Unincorporated Areas of Douglas County.
	Approximately 4,510 feet upstream of Dorsett Shoals Road.	+944	
Crooked Creek	At confluence with Anneewakee Creek	+875	Unincorporated Areas of Douglas County.
	Approximately 4,070 feet upstream of Bomar Road	+1,021	
Crooked Creek Tributary A	At confluence with Crooked Creek	+897	Unincorporated Areas of Douglas County.
	Approximately 4,270 feet upstream of confluence with Crooked Creek.	+943	
Crooked Creek Tributary B	At confluence with Crooked Creek	+909	Unincorporated Areas of Douglas County.
	Approximately 290 feet upstream of Pilgrim Drive	+938	
Crooked Creek Tributary C	At confluence with Crooked Creek	+914	Unincorporated Areas of Douglas County.
	Approximately 430 feet upstream of Tara Woods Drive	+934	
Crooked Creek Tributary D	At confluence with Crooked Creek	+930	Unincorporated Areas of Douglas County.
	Approximately 2,880 feet upstream of confluence with Crooked Creek.	+969	
Crossing Branch	At confluence with Anneewakee Creek	+905	Unincorporated Areas of Douglas County, City of Douglasville.
	Approximately 6,340 feet upstream of confluence with Anneewakee Creek.	+984	

Flooding source(s)	Location of referenced elevation	* Elevation in feet (NGVD) + Elevation in feet (NAVD) # Depth in feet above ground Modified	Communities affected
Dorsett Creek	At confluence with Bear Creek	+936	Unincorporated Areas of Douglas County.
	Approximately 440 feet upstream of Dorsett Shoals Road	+1,059	
Douglas County Water Reservoir.	Entire shoreline	+760	Unincorporated Areas of Douglas County.
Farm Branch	At confluence with Anneewakee Creek	+885	Unincorporated Areas of Douglas County.
	Approximately 290 feet upstream of Camel Drive	+927	
Farm Branch Tributary A	At confluence with Farm Branch	+888	Unincorporated Areas of Douglas County.
	Approximately 2,350 feet upstream of Bomar Road	+942	
Gothards Creek	Approximately 12,900 feet downstream of confluence of Gothards Creek Tributary 3.	+923	Unincorporated Areas of Douglas County.
	Approximately 10,000 feet downstream of confluence of Gothards Creek Tributary 3.	+926	
Knollwood Branch	At confluence with Anneewakee Creek	+972	Unincorporated Areas of Douglas County, City of Douglasville.
	Approximately 310 feet upstream of State Highway 5	+1,143	
Knollwood Branch Tributary A	At confluence with Knollwood Branch	+1,105	Unincorporated Areas of Douglas County.
	Approximately 200 feet upstream of Pinehurst Way	+1,137	
Little Anneewakee Creek	At confluence with Anneewakee Creek	+897	Unincorporated Areas of Douglas County, City of Douglasville.
	Approximately 450 feet upstream of East Big B Road	+1,058	
Little Anneewakee Creek Tributary A.	At confluence with Little Anneewakee Creek	+905	Unincorporated Areas of Douglas County, City of Douglasville.
	Approximately 1,610 feet upstream of Bedford Place	+1,043	
Little Anneewakee Creek Tributary B.	At confluence with Little Anneewakee Creek	+910	City of Douglasville.
	Approximately 940 feet upstream of Logan Lane	+967	
Little Anneewakee Creek Tributary C.	At confluence with Little Anneewakee Creek	+925	Unincorporated Areas of Douglas County, City of Douglasville.
	Approximately 1,910 feet upstream of confluence with Little Anneewakee Creek.	+955	
Little Anneewakee Creek Tributary D.	At confluence with Little Anneewakee Creek	+948	Unincorporated Areas of Douglas County, City of Douglasville.
	Approximately 300 feet upstream of Cindy Drive (2nd crossing).	+1,003	
Little Anneewakee Creek Tributary E.	At confluence with Little Anneewakee Creek	+958	Unincorporated Areas of Douglas County, City of Douglasville.
	Approximately 2,020 feet upstream of Little Anneewakee Creek.	+1,040	
Little Bear Creek	At confluence with Bear Creek	+756	Unincorporated Areas of Douglas County.
	Approximately 7,350 feet upstream of Smokestone Drive	+1,019	
Little Bear Creek Tributary A	At confluence with Little Bear Creek	+776	Unincorporated Areas of Douglas County.
	Approximately 3,520 feet upstream of confluence of Little Bear Creek Tributary B.	+880	
Little Bear Creek Tributary B	At confluence with Little Bear Creek Tributary A	+806	Unincorporated Areas of Douglas County.
	Approximately 1,340 feet upstream of confluence with Little Bear Creek Tributary A.	+841	
Little Bear Creek Tributary C	At confluence with Little Bear Creek	+791	Unincorporated Areas of Douglas County.
	Approximately 4,760 feet upstream of confluence with Little Bear Creek.	+882	
Little Bear Creek Tributary D	At confluence with Little Bear Creek	+817	Unincorporated Areas of Douglas County.
	Approximately 3,160 feet upstream of confluence with Little Bear Creek.	+923	

Flooding source(s)	Location of referenced elevation	* Elevation in feet (NGVD) + Elevation in feet (NAVD) # Depth in feet above ground Modified	Communities affected
Little Bear Creek Tributary E	At confluence with Little Bear Creek	+827	Unincorporated Areas of Douglas County.
	Approximately 7,500 feet upstream of confluence with Little Bear Creek.	+917	
Little Bear Creek Tributary F	At confluence with Little Bear Creek	+920	Unincorporated Areas of Douglas County.
	Approximately 2,080 feet upstream of confluence with Little Bear Creek.	+941	
Mobley Creek Tributary 6	Approximately 20 feet upstream of confluence with Mobley Creek.	+934	Unincorporated Areas of Douglas County.
	Approximately 450 feet upstream of confluence with Mobley Creek.	+935	
Panther Creek	At confluence with Chapel Farms Creek	+773	Unincorporated Areas of Douglas County.
	Approximately 1,230 feet upstream of Chapel Hill Farms Drive.	+933	
Panther Creek Tributary A	At confluence with Panther Creek	+826	Unincorporated Areas of Douglas County.
	Approximately 1,320 feet upstream of confluence with Panther Creek.	+851	
Simon Creek	At confluence with Anneewakee Creek	+878	Unincorporated Areas of Douglas County.
	Approximately 1,660 feet upstream of Harvest Ridge Drive.	+934	
Slater Mill Creek	At confluence with Little Anneewakee Creek	+942	Unincorporated Areas of Douglas County, City of Douglasville.
	Approximately 400 feet upstream of Village Court	+1,059	
Slater Mill Creek Tributary A	At confluence with Slater Mill Creek	+1,031	City of Douglasville.
	Approximately 360 feet upstream of East Spring Street	+1,171	
Slater Mill Creek Tributary B	At confluence with Slater Mill Creek	+1,032	Unincorporated Areas of Douglas County, City of Douglasville.
	Approximately 1,360 feet upstream of Fairburn Road/State Highway 92.	+1,069	
Sweetwater Creek	Approximately 5,900 feet downstream of State Highway 61/Dallas Highway.	+972	Unincorporated Areas of Douglas County.
	Approximately 2,450 feet upstream of State Highway 61/Dallas Highway.	+979	
Tanyard Branch	At confluence with Little Bear Creek	+805	Unincorporated Areas of Douglas County.
	Approximately 210 feet upstream of Canterbury Walk Way	+1,132	
Tanyard Branch Tributary A	At confluence with Tanyard Branch	+1,003	Unincorporated Areas of Douglas County.
	Approximately 380 feet upstream of Twin Oak Drive	+1,081	
Tiger Creek	At confluence with Anneewakee Creek	+1,045	City of Douglasville.
	Approximately 650 feet upstream of Rose Avenue	+1,152	
Tiger Creek Tributary A	At confluence with Tiger Creek	+1,086	City of Douglasville.
	Approximately 880 feet upstream of confluence with Tiger Creek.	+1,097	

* National Geodetic Vertical Datum.
+ North American Vertical Datum.
# Depth in feet above ground.

ADDRESSES

City of Douglasville

Maps are available for inspection at 6695 Church Street, Douglasville, GA 30134.

Unincorporated Areas of Douglas County

Maps are available for inspection at 8700 Hospital Drive, Douglasville, GA 30134.

Morgan County, Illinois, and Incorporated Areas
FEMA Docket No.: B–7798

Illinois River	From the Scott/Morgan County Border; Smith Lake Road extended.	+447	Unincorporated Areas of Morgan County, Village of Meredosia.
	To the Cass/Morgan County Border; Morgan Cass County Line Road.	+448	

Flooding source(s)	Location of referenced elevation	* Elevation in feet (NGVD) + Elevation in feet (NAVD) # Depth in feet above ground Modified	Communities affected
Mauvaise Terre Creek	From approximately Michigan Avenue extended	+595	Village of S. Jacksonville.
	To approximately 50 feet downstream of Vandalia Road; approximately 60 feet upstream of Country Club Road.	+595	
Town Brook	From Massey Lane	+603	Unincorporated Areas of Morgan County.
	To the limit of Detailed Study; approximately 650 feet upstream of Massey Lane.	+603	

* National Geodetic Vertical Datum.
+ North American Vertical Datum.
# Depth in feet above ground.

ADDRESSES

Unincorporated Areas of Morgan County

Maps are available for inspection at Morgan County Regional Planning Commission, 345 West State Street, Jacksonville, IL 62650.

Village of Meredosia

Maps are available for inspection at Meredosia Village Hall, 315 Main Street, Meredosia, IL 62665.

Village of S. Jacksonville

Maps are available for inspection at South Jacksonville Village Hall, 301 Dewey Street, South Jacksonville, IL 62650.

Scott County, Illinois, and Incorporated Areas
FEMA Docket No.: B–7798

Illinois River	From river mile 67.0, approximately 500 feet upstream of the confluence with Coon Run.	+447	Unincorporated Areas of Scott County.
	To the Morgan/Scott county boundary at river mile 68.0—approximately Smith Lake Road extended.	+447	

* National Geodetic Vertical Datum.
+ North American Vertical Datum.
# Depth in feet above ground.

ADDRESSES

Unincorporated Areas of Scott County

Maps are available for inspection at Scott County Courthouse, 35 East Market Street, Winchester, IL 62694.

Leavenworth County, Kansas, and Incorporated Areas
FEMA Docket No.: B–7786

Stranger Creek	At Highway 32	+796	Unincorporated Areas of Leavenworth County, City of Easton, City of Linwood.
	At Tonganoxie Road	+842	
	At Millwood Road	+914	

* National Geodetic Vertical Datum.
+ North American Vertical Datum.
# Depth in feet above ground.

ADDRESSES

City of Easton

Maps are available for inspection at City Hall, 300 W. Riley, Easton, KS 66020.

City of Linwood

Maps are available for inspection at City Hall, 306 Main Street, Linwood, KS 66052.

Unincorporated Areas of Leavenworth County

Maps are available for inspection at Leavenworth County Courthouse, 4th and Walnut, Leavenworth, KS 66048.

Surry County, North Carolina and Incorporated Areas
Docket No.: FEMA–B–7795

Ararat River	At the confluence with Yadkin River	+803	Unincorporated Areas of Surry County, City of Mount Airy.
	Approximately 1,500 feet upstream of Riverside Drive (State Road 104).	+1,094	
Ararat River Tributary 1	At the confluence with Ararat River	+810	Unincorporated Areas of Surry County.
	Approximately 0.5 mile upstream of the confluence with Ararat River.	+870	
Ararat River Tributary 2	At the confluence with Ararat River	+813	Unincorporated Areas of Surry County.

Flooding source(s)	Location of referenced elevation	* Elevation in feet (NGVD) + Elevation in feet (NAVD) # Depth in feet above ground Modified	Communities affected
	Approximately 0.4 mile upstream of John Scott Road (State Road 2079).	+842	
Ararat River Tributary 3	At the confluence with Ararat River	+818	Unincorporated Areas of Surry County.
	Approximately 0.6 mile upstream of Reeves Road (State Road 2083).	+856	
Ararat River Tributary 4	At the confluence with Ararat River	+818	Unincorporated Areas of Surry County.
	Approximately 1.2 miles upstream of Pilot Church Road (State Road 2057).	+913	
Ararat River Tributary 5	At the confluence with Ararat River	+825	Unincorporated Areas of Surry County.
	Approximately 0.6 mile upstream of the confluence with Ararat River.	+900	
Ararat River Tributary 6	At the confluence with Ararat River	+841	Unincorporated Areas of Surry County.
	Approximately 20 feet upstream of Nichols Road (State Road 2105).	+872	
Ararat River Tributary 6A	At the confluence with Ararat River Tributary 6	+862	Unincorporated Areas of Surry County.
	Approximately 530 feet upstream of the confluence with Ararat River Tributary 6.	+869	
Ararat River Tributary 7	At the confluence with Ararat River	+867	Unincorporated Areas of Surry County.
	Approximately 0.4 mile upstream of the confluence with Ararat River.	+884	
Ararat River Tributary 8	At the downstream side of Riverside Drive	+1,037	City of Mount Airy.
	Approximately 130 feet downstream of Springs Road	+1,135	
Ararat River Tributary 9	At the confluence with Ararat River	+1,089	Unincorporated Areas of Surry County.
	Approximately 0.9 mile upstream of the confluence with Ararat River.	+1,135	
Bear Creek	At the confluence with Fisher River	+886	Unincorporated Areas of Surry County.
	Approximately 1.5 miles upstream of the confluence with Fisher River.	+940	
Beaver Creek	At the confluence with Fisher River	+955	Unincorporated Areas of Surry County.
	Approximately 1.0 mile upstream of Simpson Mill Road (State Road 2200).	+1,046	
Beaverdam Creek	At the confluence with Little Fisher River	+1,078	Unincorporated Areas of Surry County.
	Approximately 1.2 miles upstream of the confluence with Hatchers Creek.	+1,130	
Benson Creek	At the upstream side of Sparger Road	+1,068	Unincorporated Areas of Surry County.
	Approximately 0.9 mile upstream of Sparger Road	+1,109	
Brendle Branch	At the confluence with Camp Creek	+944	Unincorporated Areas of Surry County.
	Approximately 0.9 mile of Interstate 77	+1,000	
Brushy Fork	Approximately 700 feet upstream of the confluence with Pauls Creek.	+1,118	Unincorporated Areas of Surry County, City of Mount Airy.
	Approximately 0.5 mile upstream of White Pines Country Club Road (State Road 1627).	+1,175	
Brushy Fork Tributary 1	At the confluence with Brushy Fork	+1,130	Unincorporated Areas of Surry County.
	Approximately 0.6 mile upstream of the confluence with Brushy Fork.	+1,171	
Bull Creek	At the confluence with Ararat River	+875	Unincorporated Areas of Surry County.
	Approximately 1.0 mile upstream of Ararat Road (State Road 2019).	+1,024	
Butler Creek	At the confluence with Mitchell River	+1,248	Unincorporated Areas of Surry County.
	Approximately 210 feet upstream of Luffman Road	+1,279	
Caddle Creek	At the confluence with Ararat River	+940	Unincorporated Areas of Surry County.

Flooding source(s)	Location of referenced elevation	* Elevation in feet (NGVD) + Elevation in feet (NAVD) # Depth in feet above ground Modified	Communities affected
	Approximately 0.6 mile upstream of Siloam Road (State Road 1003).	+1,018	
Camp Branch	At the confluence with Fisher River	+1,251	Unincorporated Areas of Surry County.
	Approximately 200 feet upstream of West Pine Street	+1,274	
Camp Creek	At the confluence with Mitchell River	+914	Unincorporated Areas of Surry County, Town of Elkin.
	Approximately 0.8 mile upstream of I–77 Highway	+978	
Candiff Creek	At the confluence with Yadkin River	+811	Unincorporated Areas of Surry County.
	Approximately 1,690 feet upstream of the confluence with Candiff Creek Tributary 2.	+894	
Candiff Creek Tributary 1	At the confluence with Candiff Creek	+811	Unincorporated Areas of Surry County.
	Approximately 1,260 feet upstream of River Siloam Road (State Road 2230).	+857	
Candiff Creek Tributary 2	At the confluence with Candiff Creek	+875	Unincorporated Areas of Surry County.
	Approximately 0.7 mile upstream of the confluence with Candiff Creek.	+923	
Champ Creek	Approximately 450 feet upstream of Slate Road	+1,040	City of Mount Airy.
	Approximately 700 feet upstream of McBride Road	+1,065	
Chinquapin Creek	At the confluence with Toms Creek	+957	Unincorporated Areas of Surry County, Town of Pilot Mountain.
	Approximately 0.8 mile upstream of Old Westfield Road (State Road 1809).	+982	
Cody Creek	At the confluence with Fisher River	+904	Unincorporated Areas of Surry County.
	Approximately 1.7 miles upstream of NC 268 Highway	+1,021	
Cooks Creek	At the confluence with Fisher River	+1,025	Unincorporated Areas of Surry County.
	Approximately 0.4 mile upstream of White Buffalo Road (State Road 1353).	+1,084	
Davenport Creek	At the confluence with Fisher River	+850	Unincorporated Areas of Surry County.
	Approximately 0.6 mile upstream of the confluence with Fisher River.	+898	
Dunagan Creek	At the confluence with Fisher River	+873	Unincorporated Areas of Surry County.
	Approximately 0.4 mile upstream of Buck Fork Road (State Road 2233).	+901	
Dutchmans Creek	At the confluence with Yadkin River	+896	Town of Elkin.
	Approximately 0.6 mile upstream of the confluence with Yadkin River.	+898	
East Double Creek	At the confluence with Yadkin River	+822	Unincorporated Areas of Surry County.
	Approximately 0.7 mile upstream of Rome Snow Road (State Road 2229).	+941	
East Double Creek Tributary 1	At the confluence with East Double Creek	+874	Unincorporated Areas of Surry County.
	Approximately 0.7 mile upstream of the confluence with East Double Creek.	+939	
Elkin Creek	Approximately 50 feet upstream of Dam	+901	Town of Elkin.
	Approximately 0.8 mile upstream of CC Camp Road	+945	
Faulkner Creek	Approximately 0.5 mile upstream of the confluence with Ararat River.	+1,007	Unincorporated Areas of Surry County, City of Mount Airy.
	Approximately 1.1 miles upstream of Quaker Road (State Road 1742).	+1,194	
Faulkner Creek Tributary 1	At the confluence with Faulkner Creek	+1,035	Unincorporated Areas of Surry County.
	Approximately 0.5 mile upstream of the confluence with Faulkner Creek.	+1,059	
Fisher River	At the confluence with Yadkin River	+847	Unincorporated Areas of Surry County, Town of Dobson.

Flooding source(s)	Location of referenced elevation	* Elevation in feet (NGVD) + Elevation in feet (NAVD) # Depth in feet above ground Modified	Communities affected
	Approximately 1.1 miles upstream of Lumber Plant Road (State Road 1600).	+2,009	
Fisher River Tributary 1	At the confluence with Fisher River	+915	Unincorporated Areas of Surry County.
	Approximately 0.7 mile upstream of Rockford Road	+974	
Fisher River Tributary 1A	At the confluence with Fisher River Tributary 1	+940	Unincorporated Areas of Surry County.
	Approximately 0.8 mile upstream of the confluence with Fisher River Tributary 1.	+1,098	
Fisher River Tributary 2	At the confluence with Fisher River	+964	Unincorporated Areas of Surry County.
	Approximately 1,420 feet downstream of Turkey Ford Church Road.	+1,028	
Fisher River Tributary 3	At the confluence with Fisher River	+978	Unincorporated Areas of Surry County.
	Approximately 0.8 mile upstream of the confluence with Fisher River.	+1,010	
Fisher River Tributary 4	At the confluence with Fisher River	+1,026	Unincorporated Areas of Surry County.
	Approximately 0.8 mile upstream of the confluence with Fisher River.	+1,109	
Fisher River Tributary 5	At the confluence with Fisher River	+1,074	Unincorporated Areas of Surry County, Town of Dobson.
	Approximately 820 feet upstream of Tobe Hudson Road (State Road 1342).	+1,086	
Flat Branch	At the confluence with South Fork Mitchell River	+1,108	Unincorporated Areas of Surry County.
	Approximately 0.7 mile upstream of the confluence with South Fork Mitchell River.	+1,156	
Flat Shoal Creek	At the confluence with Ararat River	+900	Unincorporated Areas of Surry County.
	Approximately 490 feet upstream of Simmons Road (State Road 1827).	+1,071	
Flat Shoal Creek Tributary 1	At the confluence with Flat Shoal Creek	+990	Unincorporated Areas of Surry County.
	Approximately 0.5 mile upstream of Willow Shade Lane	+1,033	
Grassy Creek	At the confluence with Yadkin River	+762	Unincorporated Areas of Surry County.
	Approximately 0.7 mile upstream of Pilot Knob Park Road (State Road 2053).	+1,027	
Grassy Creek Tributary 1	At the confluence with Grassy Creek	+792	Unincorporated Areas of Surry County.
	Approximately 0.5 mile upstream of the confluence with Grassy Creek.	+824	
Grassy Creek Tributary 2	At the confluence with Grassy Creek	+797	Unincorporated Areas of Surry County.
	Approximately 1.2 miles upstream of the confluence with Grassy Creek.	+905	
Grassy Creek Tributary 3	At the confluence with Grassy Creek	+804	Unincorporated Areas of Surry County.
	Approximately 1.0 mile upstream of the confluence with Grassy Creek.	+892	
Grassy Creek Tributary 4	At the confluence with Grassy Creek	+834	Unincorporated Areas of Surry County.
	Approximately 1,390 feet downstream of Shadow Creek Trail.	+879	
Grassy Creek Tributary 5	At the confluence with Grassy Creek	+845	Unincorporated Areas of Surry County.
	Approximately 0.9 mile upstream of Pinnacle Hotel Road	+1,008	
Grassy Creek Tributary 5A	At the confluence with Grassy Creek Tributary 5	+858	Unincorporated Areas of Surry County.
	Approximately 240 feet downstream of Pinnacle Hotel Road (State Road 2061).	+986	
Grassy Creek Tributary 5B	At the confluence with Grassy Creek Tributary 5	+886	Unincorporated Areas of Surry County.
	Approximately 0.5 mile upstream of the confluence with Grassy Creek Tributary 5.	+934	

Flooding source(s)	Location of referenced elevation	* Elevation in feet (NGVD) + Elevation in feet (NAVD) # Depth in feet above ground Modified	Communities affected
Grassy Creek Tributary 6	At the confluence with Grassy Creek	+858	Unincorporated Areas of Surry County.
	Approximately 380 feet upstream of Mt. Zion Road (State Road 2064).	+931	
Grassy Creek Tributary 7	At the confluence with Grassy Creek	+884	Unincorporated Areas of Surry County.
	Approximately 1.1 miles upstream of Santa Fe Trail	+1,042	
Grassy Creek Tributary 8	At the confluence with Grassy Creek	+905	Unincorporated Areas of Surry County.
	Approximately 1,500 feet upstream of the confluence with Grassy Creek.	+915	
Grassy Creek Tributary 9	At the confluence with Grassy Creek	+977	Unincorporated Areas of Surry County.
	Approximately 1,500 feet upstream of the confluence with Grassy Creek.	+997	
Grassy Creek West	At the Surry/Wilkes County boundary	+987	Town of Elkin.
	Approximately 1,300 feet upstream of the Surry/Wilkes County boundary.	+1,002	
Hagan Creek	At the confluence with Yadkin River	+807	Unincorporated Areas of Surry County.
	Approximately 1.9 miles upstream of Miller Gap Road	+1,068	
Hagan Creek Tributary 1	At the confluence with Hagan Creek	+848	Unincorporated Areas of Surry County.
	Approximately 380 feet upstream of Solitude Trail	+891	
Hagan Creek Tributary 2	At the confluence with Hagan Creek	+939	Unincorporated Areas of Surry County.
	Approximately 0.6 mile upstream of the confluence with Hagan Creek.	+973	
Hagan Creek Tributary 3	At the confluence with Hagan Creek	+972	Unincorporated Areas of Surry County.
	Approximately 0.9 mile upstream of the confluence with Hagan Creek.	+1,024	
Hatchers Creek	At the confluence with Beaverdam Creek	+1,101	Unincorporated Areas of Surry County.
	Approximately 230 feet upstream of Beulah Road	+1,122	
Heatherly Creek	At the confluence with Toms Creek	+918	Unincorporated Areas of Surry County, Town of Pilot Mountain.
	Approximately 980 feet upstream of Nelson Street	+1,130	
Horne Creek	At the confluence with Yadkin River	+764	Unincorporated Areas of Surry County.
	Approximately 1,780 feet upstream of the confluence of Horne Creek Tributary 1.	+833	
Horne Creek Tributary 1	At the confluence with Horne Creek	+818	Unincorporated Areas of Surry County.
	Approximately 0.4 mile upstream of the confluence of Horne Creek Tributary 1A.	+861	
Horne Creek Tributary 1A	At the confluence with Horne Creek Tributary 1	+831	Unincorporated Areas of Surry County.
	Approximately 1,400 feet upstream of the confluence with Horne Creek Tributary 1.	+855	
Jackson Creek	At the confluence with Cooks Creek	+1,025	Unincorporated Areas of Surry County.
	Approximately 1.1 miles upstream of the confluence with Cooks Creek.	+1,062	
Jackson Creek Tributary 1	At the confluence with Jackson Creek	+1,028	Unincorporated Areas of Surry County.
	Approximately 200 feet downstream of Rockford Street	+1,055	
Jackson Creek Tributary 2	At the confluence with Jackson Creek	+1,030	Unincorporated Areas of Surry County.
	Approximately 100 feet downstream of Smith Road (State Road 1354).	+1,067	
Johnson Creek	Approximately 100 feet upstream of Riverside Drive	+1,062	Unincorporated Areas of Surry County, City of Mount Airy.
	Approximately 1.5 miles upstream of Riverside Drive	+1,097	
King Creek	At the confluence with Cody Creek	+925	Unincorporated Areas of Surry County.

Flooding source(s)	Location of referenced elevation	* Elevation in feet (NGVD) + Elevation in feet (NAVD) # Depth in feet above ground Modified	Communities affected
	Approximately 1,710 feet upstream of U.S. 601 Highway ..	+1,002	
Little Beaver Creek	At the confluence with Fisher River	+925	Unincorporated Areas of Surry County.
	Approximately 50 feet downstream of Copeland School Road (State Road 2209).	+1,046	
Little Creek	At the confluence with Snow Creek	+973	Unincorporated Areas of Surry County.
	Approximately 810 feet upstream of Melton Road (State Road 1127).	+1,244	
Little Fisher River	At the confluence with Fisher River	+1,027	Unincorporated Areas of Surry County.
	Approximately 2.2 miles upstream of Richards Road (State Road 1614).	+1,209	
Little Fisher River Tributary 1 ...	At the confluence with Little Fisher River	+1,041	Unincorporated Areas of Surry County.
	Approximately 0.7 mile upstream of the confluence with Little Fisher River.	+1,077	
Little Fisher River Tributary 2 ...	At the confluence with Little Fisher River	+1,103	Unincorporated Areas of Surry County.
	Approximately 800 feet downstream of Dynasty Lane	+1,151	
Little Fisher River Tributary 3 ...	At the confluence with Little Fisher River	+1,112	Unincorporated Areas of Surry County.
	Approximately 550 feet upstream of NC Highway 89	+1,143	
Little Fisher River Tributary 3A	At the confluence with Little Fisher River Tributary 3	+1,113	Unincorporated Areas of Surry County.
	Approximately 0.6 mile upstream of the confluence with Little Fisher River Tributary 3.	+1,135	
Little Yadkin River	At the confluence with Yadkin River	+758	Unincorporated Areas of Surry County.
	Approximately 1.0 mile upstream of the confluence with Yadkin River.	+767	
Long Creek	At the confluence with Mitchell River	+1,402	Unincorporated Areas of Surry County.
	Approximately 1.1 miles upstream of the confluence with Mitchell River.	+1,575	
Lovills Creek	Approximately 0.5 mile upstream of the confluence with Ararat River.	+991	Unincorporated Areas of Surry County, City of Mount Airy.
	Approximately 1.5 miles upstream of Greenhill Road	+1,106	
Mill Creek	At the confluence with Mitchell River	+1,099	Unincorporated Areas of Surry County.
	Approximately 650 feet upstream of Ed Nixon Road (State Road 1321).	+1,158	
Mitchell River	At the confluence with Yadkin River	+875	Unincorporated Areas of Surry County.
	Approximately 2.2 miles upstream of Haystack Road (State Road 1328).	+1,480	
Moores Fork	Approximately 1,300 feet upstream of the confluence with Stewarts Creek.	+1,078	Unincorporated Areas of Surry County.
	Approximately 0.5 mile upstream of Race Track Road (State Road 1620).	+1,099	
Moores Fork Tributary 1	At the confluence with Moores Fork	+1,085	Unincorporated Areas of Surry County.
	Approximately 1,570 feet upstream of NC Highway 89	+1,110	
North Fork Mitchell River	At the confluence with Mitchell River	+1,232	Unincorporated Areas of Surry County.
	Approximately 0.5 mile upstream of the confluence with Mitchell River.	+1,248	
North Prong South Fork Mitchell River.	At the confluence with South Fork Mitchell River	+1,212	Unincorporated Areas of Surry County.
	Approximately 0.4 mile upstream of Rams Ridge Trail	+1,407	
Pheasant Creek	At the confluence with Fisher River	+860	Unincorporated Areas of Surry County.
	Approximately 1,980 feet upstream of Chandler Road (State Road 2238).	+910	
Pilot Creek	At the confluence with Ararat River	+858	Unincorporated Areas of Surry County, Town of Pilot Mountain.

Flooding source(s)	Location of referenced elevation	* Elevation in feet (NGVD) + Elevation in feet (NAVD) # Depth in feet above ground Modified	Communities affected
	Approximately 750 feet upstream of Leonard Road	+1,083	
Pilot Creek Tributary 1	At the confluence with Pilot Creek	+875	Unincorporated Areas of Surry County.
	Approximately 0.4 mile upstream of Jim McKinney Road (State Road 2047).	+914	
Pilot Creek Tributary 2	At the confluence with Pilot Creek	+880	Unincorporated Areas of Surry County.
	Approximately 0.5 mile upstream of the confluence with Pilot Creek.	+912	
Pilot Creek Tributary 3	At the confluence with Pilot Creek	+936	Unincorporated Areas of Surry County, Town of Pilot Mountain.
	Approximately 1,130 feet upstream of the confluence with Pilot Creek Tributary 3A.	+999	
Pilot Creek Tributary 3A	At the confluence with Pilot Creek Tributary 3	+978	Town of Pilot Mountain.
	Approximately 1,240 feet upstream of the confluence with Pilot Creek Tributary 3.	+1,011	
Pilot Creek Tributary 4	At the confluence with Pilot Creek	+1,005	Unincorporated Areas of Surry County.
	Approximately 1,870 feet upstream of the confluence with Pilot Creek.	+1,056	
Pine Branch	At the confluence with Mitchell River	+1,110	Unincorporated Areas of Surry County.
	Approximately 1,930 feet upstream of Millstone Trail	+1,134	
Potters Creek	At the confluence with Mitchell River	+1,166	Unincorporated Areas of Surry County.
	Approximately 0.9 mile upstream of the confluence with Mitchell River.	+1,220	
Ring Creek	At the confluence with Little Fisher River	+1,132	Unincorporated Areas of Surry County.
	Approximately 1.0 mile upstream of Richards Road	+1,166	
Rutledge Creek	At the confluence with Ararat River	+972	Unincorporated Areas of Surry County.
	Approximately 2.1 miles upstream of Reeves Mill Road (State Road 1774).	+1,218	
Rutledge Creek Tributary 1	At the confluence with Rutledge Creek	+1,077	Unincorporated Areas of Surry County.
	Approximately 1,220 feet upstream of Reeves Mill Road (State Road 1776).	+1,107	
Seed Cane Creek	Approximately 100 feet upstream of the confluence with Ararat River.	+994	City of Mount Airy.
	Approximately 730 feet upstream of Kirkman Road	+1,060	
Skin Cabin Creek	At the confluence with Ararat River	+834	Unincorporated Areas of Surry County.
	Approximately 0.7 mile upstream of Stanford Church Road (State Road 2086).	+950	
Snow Creek	At the confluence with Mitchell River	+880	Unincorporated Areas of Surry County.
	Approximately 0.9 mile upstream of I–77 Highway	+1,260	
Snow Creek Tributary	At the confluence with Snow Creek	+919	Unincorporated Areas of Surry County.
	Approximately 1,540 feet downstream of Stanley Mill Road (State Road 1111).	+953	
South Fork Mitchell River	At the confluence with Mitchell River	+984	Unincorporated Areas of Surry County.
	Approximately 0.5 mile upstream of Silver Creek Way	+1,623	
South Fork Mitchell River Tributary 1.	At the confluence with South Fork Mitchell River	+1,068	Unincorporated Areas of Surry County.
	Approximately 80 feet downstream of Pat Nixon Road (State Road 1306).	+1,091	
South Fork Mitchell River Tributary 2.	At the confluence with South Fork Mitchell River	+1,159	Unincorporated Areas of Surry County.
	Approximately 250 feet downstream of Abe Mayes Road (State Road 1319).	+1,205	
South Fork Mitchell River Tributary 2A.	At the confluence with South Fork Mitchell River Tributary 2.	+1,173	Unincorporated Areas of Surry County.
	Approximately 1,740 feet upstream of the confluence with South Fork Mitchell River Tributary 2.	+1,206	

Flooding source(s)	Location of referenced elevation	* Elevation in feet (NGVD) + Elevation in feet (NAVD) # Depth in feet above ground Modified	Communities affected
South Fork Mitchell River Tributary 2B.	At the confluence with South Fork Mitchell River Tributary 2.	+1,178	Unincorporated Areas of Surry County.
	Approximately 0.5 mile upstream of the intersection of Oscar Calloway Road and Abe Mayes Road (State Road 1319).	+1,210	
Stewarts Creek	Approximately 0.5 mile upstream of Interstate 77	+1,226	Unincorporated Areas of Surry County.
	At the NC/VA State boundary	+1,309	
Stewarts Creek Tributary 1	At the confluence with Stewarts Creek	+1,011	Unincorporated Areas of Surry County, City of Mount Airy.
	Approximately 0.5 mile upstream of West Old McKinney Road (State Road 1429).	+1,078	
Stewarts Creek Tributary 2	At the confluence with Stewarts Creek	+1,058	Unincorporated Areas of Surry County.
	Approximately 230 feet upstream of Oak Ridge Drive (State Road 1504).	+1,248	
Stewarts Creek Tributary 2A	At the confluence with Stewarts Creek Tributary 2	+1,117	Unincorporated Areas of Surry County.
	Approximately 710 feet upstream of Melrose Trail	+1,252	
Stoney Creek	At the confluence with Ararat River	+916	Unincorporated Areas of Surry County.
	Approximately 170 feet upstream of Mills Road	+1,208	
Toms Creek	At the confluence with Ararat River	+879	Unincorporated Areas of Surry County, Town of Pilot Mountain.
	Approximately 0.5 mile upstream of Matthews Road (State Road 1830).	+964	
Toms Creek Tributary 1	At the confluence with Toms Creek	+909	Unincorporated Areas of Surry County.
	Approximately 0.8 mile upstream of the confluence of Toms Creek Tributary 1A.	+954	
Toms Creek Tributary 1A	At the confluence with Toms Creek Tributary 1	+919	Unincorporated Areas of Surry County.
	Approximately 1,430 feet upstream of the confluence with Toms Creek Tributary 1.	+934	
Toms Creek Tributary 2	At the confluence with Toms Creek	+931	Town of Pilot Mountain.
	Approximately 210 feet upstream of Foothill Farm Lane	+951	
Turkey Creek	At the confluence with Yadkin River	+890	Town of Elkin.
	Approximately 0.6 mile upstream of NC 268 Highway	+927	
West Double Creek	At the confluence with East Double Creek	+822	Unincorporated Areas of Surry County.
	Approximately 1.5 miles upstream of Old Rockford Road (State Road 2230).	+903	
West Double Creek Tributary 1	At the confluence with West Double Creek	+834	Unincorporated Areas of Surry County.
	Approximately 0.5 mile upstream of Dobson Spring Trail	+899	
West Double Creek Tributary 1A.	At the confluence with West Double Creek Tributary 1	+877	Unincorporated Areas of Surry County.
	Approximately 0.5 mile upstream of the confluence with West Double Creek Tributary 1.	+907	
Whittier Creek	At the confluence with Bull Creek	+931	Unincorporated Areas of Surry County.
	Approximately 1.8 miles upstream of the confluence with Bull Creek.	+987	
Wood Branch	At the confluence with South Fork Mitchell River	+1,117	Unincorporated Areas of Surry County.
	Approximately 0.8 mile upstream of the confluence with South Fork Mitchell River.	+1,158	
Yadkin River	At the Surry/Yadkin/Forsyth County boundary	+758	Unincorporated Areas of Surry County, Town of Elkin.
	Approximately 1.2 miles upstream of the confluence with Elkin Creek.	+903	
Yadkin River Tributary 12	At the confluence with Yadkin River	+866	Unincorporated Areas of Surry County.
	Approximately 0.8 mile upstream of Railroad	+881	

Flooding source(s)	Location of referenced elevation	* Elevation in feet (NGVD) + Elevation in feet (NAVD) # Depth in feet above ground Modified	Communities affected
Yadkin River Tributary 13	At the confluence with Yadkin River	+887	Unincorporated Areas of Surry County.
	Approximately 1,260 feet upstream of NC 268 Highway	+895	
Yadkin River Tributary 16	At the confluence with Yadkin River	+824	Unincorporated Areas of Surry County.
	Approximately 0.5 mile upstream of Railroad	+850	
Yadkin River Tributary 18	At the confluence with Yadkin River	+831	Unincorporated Areas of Surry County.
	Approximately 10 feet upstream of Golden Eagle Trail	+885	
Yadkin River Tributary 37	At the confluence with Yadkin River	+800	Unincorporated Areas of Surry County.
	Approximately 1,680 feet upstream of John Mickles Road (State Road 2075).	+852	

* National Geodetic Vertical Datum.
+ North American Vertical Datum.
# Depth in feet above ground.

ADDRESSES

City of Mount Airy
Maps are available for inspection at Mount Airy City Hall, 300 South Main Street, Mount Airy, North Carolina.

Town of Dobson
Maps are available for inspection at Dobson Town Hall, 307 North Main Street, Dobson, North Carolina.

Town of Elkin
Maps are available for inspection at Elkin Town Hall, 226 North Bridge Street, Elkin, North Carolina.

Town of Pilot Mountain
Maps are available for inspection at Pilot Mountain Town Hall, 124 West Main Street, Pilot Mountain, North Carolina.

Unincorporated Areas of Surry County
Maps are available for inspection at Surry County Planning Department, 122 Hamby Road, Dobson, North Carolina.

Portage County, Ohio, and Incorporated Areas
FEMA Docket No.: B–7768

Breakneck Creek	Approximately 260 feet upstream of Brady Lake Road	+1,040	Unincorporated Areas of Portage County.
	At confluence of Breakneck Creek and Hudson Ditch	+1,069	
Breakneck Creek Overflow	Approximately 5,300 feet upstream of Main Street	+1,048	City of Kent.
	Approximately 1,400 feet downstream of Powder Mill Road.	+1,048	
Breakneck Creek Overflow	Approximately 3,500 feet upstream of Main Street	+1,047	Unincorporated Areas of Portage County.
	Approximately 600 feet downstream of Powder Mill Road	+1,048	
Cuyahoga River	Approximately 80 feet upstream of Main Street	+1,084	Village of Mantua.
	Approximately 3,300 feet upstream of High Street	+1,087	
Cuyahoga River	Approximately 1,500 feet upstream of River Bend Boulevard.	+1,040	Unincorporated Areas of Portage County.
	Approximately 2,900 feet upstream of River Bend Boulevard.	+1,040	
	Approximately 1,600 feet downstream of Infirmary Road	+1,082	
	Approximately 3,300 feet upstream of High Street	+1,087	
Cuyahoga River Overflow	Approximately 1,100 feet upstream of confluence with Cuyahoga River.	+1,083	Village of Mantua.
	Approximately 2,600 feet upstream of confluence with Cuyahoga River.	+1,083	
Cuyahoga River Overflow	Approximately 700 feet upstream of confluence with Cuyahoga River.	+1,083	Unincorporated Areas of Portage County.
	Approximately 1,700 feet upstream of confluence with Cuyahoga River.	+1,083	
Hudson Ditch	At confluence of Breakneck Creek and Hudson Ditch	+1,069	Unincorporated Areas of Portage County.
	Approximately 2,300 feet upstream of Bower Road	+1,084	
Plum Creek	Approximately 30 feet upstream of Railroad	+1,017	City of Kent.
	Approximately 200 feet downstream of Howe Road	+1,040	
Plum Creek	Approximately 330 feet downstream of Howe Road	+1,039	Unincorporated Areas of Portage County.
	Approximately 4,000 feet upstream of Tallmadge Road	+1,078	

* National Geodetic Vertical Datum.
+ North American Vertical Datum.

Flooding source(s)	Location of referenced elevation	* Elevation in feet (NGVD) + Elevation in feet (NAVD) # Depth in feet above ground Modified	Communities affected

Depth in feet above ground.

ADDRESSES

City of Kent
Maps are available for inspection at 930 Overholt Road, Kent, OH 44240.

Unincorporated Areas of Portage County
Maps are available for inspection at 449 South Meridian Street, Ravenna, OH 44266.

Village of Mantua
Maps are available for inspection at 4736 East High Street, Mantua, OH 44255.

Wayne County, Ohio, and Incorporated Areas
FEMA Docket No.: B–7794

Killbuck Ditch (backwater from Killbuck Creek).	Downstream of railroad crossing at Burbank Road	+967	Unincorporated Areas of Wayne County, Village of Creston.
	Confluence with Killbuck Creek	+967	Village of Creston.
Unnamed Tributary (backwater from Killibuck Creek).	Confluence with Killbuck Creek	+976	Unincorporated Areas of Wayne County, Village of Creston.
	Upstream of S. Main Street in Village of Creston	+976	

* National Geodetic Vertical Datum.
+ North American Vertical Datum.
# Depth in feet above ground.

ADDRESSES

Unincorporated Areas of Wayne County
Maps are available for inspection at 428 West Liberty Street, Wooster, OH 44691.

Village of Creston
Maps are available for inspection at 100 N Main Street, Creston, OH 44217.

Brown County, Wisconsin, and Incorporated Areas
FEMA Docket No.: B–7758

Ash Street Tributary to Lancaster Creek.	Approximately 510 feet downstream of Ash Street	+602	Village of Howard.
	Approximately 160 feet upstream of Ash Street	+608	
Ashwaubenon Creek	Approximately 2,990 feet downstream of Memorial Park Road.	+586	Unincorporated Areas of Brown County, City of De Pere, Village of Ashwaubenon.
	Approximately 3,940 feet upstream of Scheuring Road	+613	
Ashwaubenon Creek (Middle)	Approximately 3,980 feet downstream of Creamery Road	+618	Unincorporated Areas of Brown County, City of De Pere.
	Approximately 8,085 feet upstream of Creamery Road	+629	
Ashwaubenon Creek (Upper)	Approximately 240 feet downstream of William Grant Drive.	+652	Unincorporated Areas of Brown County.
	Approximately 185 feet upstream of William Grant Drive	+661	
Baird Creek	Approximately 425 feet upstream of U.S. Route 141	+589	Unincorporated Areas of Brown County, City of Green Bay.
	Just upstream of Northview Road	+778	
Baird Creek Tributary	Approximately 6,340 feet downstream of Erie Road	+701	City of Green Bay.
	Approximately 1,465 feet upstream of Finger Road	+778	
Baird Creek Tributary 6	Approximately 450 feet downstream of Fox Valley and Western Railroad.	+619	City of Green Bay.
	Approximately 910 feet upstream of Fox Valley and Western Railroad.	+673	
Bakers Creek	Approximately 155 feet downstream of Belmont Road	+649	Village of Howard.
	Approximately 940 feet upstream of Hillcrest Heights Road.	+658	
Bakers Creek Tributary	Approximately 125 feet upstream of railroad	+603	Village of Howard.
	Approximately 2,325 feet upstream of railroad	+617	
Barina Creek	Approximately 320 feet downstream of Church Road	+613	City of Green Bay.
	Approximately 2,000 feet upstream of Church Road	+621	
Beaver Dam Creek	Approximately 420 feet downstream of Velp Avenue	+588	Village of Howard, City of Green Bay, Oneida Tribe.
	Approximately 1,400 feet upstream of Packerland Drive	+677	

Flooding source(s)	Location of referenced elevation	* Elevation in feet (NGVD) + Elevation in feet (NAVD) # Depth in feet above ground Modified	Communities affected
Bower Creek	At the confluence with the East River	+591	Village of Bellevue, Town of Ledgeview.
	Approximately 10,570 feet upstream of Lime Kiln Road	+635	Bower Creek Tributary.
Bower Creek Tributary	Approximately 396 feet downstream of Pine Grove Road	+827	Unincorporated Areas of Brown County, Town of Ledgeview.
	Approximately 52 feet upstream of Dickinson Road	+833	
Bower Creek Tributary 1	Approximately 40 feet downstream of Monroe Road	+591	Village of Bellevue, Town of Ledgeview.
	Approximately 4,610 feet upstream of Bower Creek Road	+618	
Bower Creek Tributary 2	Approximately 110 feet downstream of Bower Creek Road	+595	Village of Bellevue, Town of Ledgeview.
	Approximately 3,260 feet upstream of Meadow Sound Drive.	+733	
Bower Creek Tributary A	Approximately 860 feet downstream of its confluence with Bower Creek Tributary B.	+604	Village of Bellevue, Town of Ledgeview.
	Approximately 4,465 feet upstream of its confluence with Bower Creek Tributary B.	+639	
Bower Creek Tributary B	At the confluence with Bower Creek Tributary A	+606	Village of Bellevue, Town of Ledgeview.
	Approximately 2,420 feet upstream of its confluence with Bower Creek Tributary A.	+630	
Branch River	Approximately 400 feet downstream of Park Road	+845	Unincorporated Areas of Brown County.
	Approximately 3,960 feet upstream of Park Road	+852	
Branch of Plum Creek	Approximately 610 feet upstream of Holland Court	+765	Unincorporated Areas of Brown County.
	Approximately 1,245 feet upstream of Holland Court	+766	
Branch of Plum Creek Lower Tributary.	At the confluence with Branch of Plum Creek	+766	Unincorporated Areas of Brown County.
	Approximately 1,590 feet upstream of its confluence with Branch of Plum Creek.	+773	
Branch of Plum Creek Upper Tributary.	At the confluence with Branch of Plum Creek	+765	Unincorporated Areas of Brown County.
	Approximately 1,190 feet upstream of its confluence with Branch of Plum Creek.	+769	
Duck Creek	Approximately 90 feet downstream of State Highway 41	+586	Village of Howard, City of Green Bay, Oneida Tribe, Village of Hobart.
	Approximately 4,825 feet upstream of State Highway 54	+676	
Duck Creek Tributary 11	At the confluence with Duck Creek	+606	City of Green Bay, Oneida Tribe.
	Approximately 1,000 feet upstream of Open Gate Trail	+673	
Duck Creek Tributary 12	Approximately 925 feet downstream of West Mason Street.	+630	City of Green Bay, Oneida Tribe, Village of Hobart.
	Approximately 1,900 feet upstream of West Mason Street	+677	
Dutchman Creek	Approximately 1,000 feet downstream of Broadway Street	+586	Village of Ashwaubenon, Oneida Tribe, Village of Hobart.
	Approximately 1,950 feet upstream of Packerland Drive	+651	
Dutchman Creek North Tributary.	Approximately 90 feet downstream of U.S. Highway 41	+605	Village of Ashwaubenon.
	Approximately 120 feet upstream of North Road	+677	
Dutchman Creek South Tributary.	Approximately 1,095 feet downstream of Parkview Road	+611	Village of Ashwaubenon.
	Approximately 1,845 feet upstream of Glory Road	+624	
Dutchman Creek Southeast Tributary.	Approximately 1,350 feet downstream of Main Avenue	+623	Village of Ashwaubenon.
	Approximately 5,550 feet upstream of Main Avenue	+637	
Dutchman Creek Southwest Tributary.	Approximately 1,350 feet downstream of Main Street	+624	Village of Ashwaubenon, Unincorporated Areas of Brown County.
	Approximately 5,350 feet upstream of County Highway G	+637	

Flooding source(s)	Location of referenced elevation	* Elevation in feet (NGVD) + Elevation in feet (NAVD) # Depth in feet above ground Modified	Communities affected
East River	Approximately 1,650 feet downstream of North Monroe Avenue.	+586	City of Green Bay, City of De Pere, Town of Ledgeview, Unincorporated Areas of Brown County, Village of Allouez, Village of Bellevue.
	Just upstream of Wrightstown Road	+631	
East River Tributary	Approximately 60 feet downstream of Monroe Road	+589	Town of Ledgeview.
	Approximately 65 feet upstream of Dickinson Road	+595	
East River Tributary A	Approximately 990 feet downstream of Dickinson Road	+592	Town of Ledgeview, City of De Pere.
	Approximately 670 feet upstream of Heritage Road	+613	
East River Tributary B	At the confluence with East River Tributary A	+592	Town of Ledgeview.
	Approximately 1,825 feet upstream of its confluence with East River Tributary A.	+595	
East Verlin North Tributary to Willow Creek.	At the confluence with East Verlin Tributary to Willow Creek.	+606	Village of Bellevue.
	Approximately 15 feet upstream of Fox Valley and Western Railroad.	+606	
East Verlin Tributary to Willow Creek.	At the confluence with Willow Creek	+591	Village of Bellevue, City of Green Bay.
	Approximately 2,900 feet upstream of Lime Kiln Road	+622	
Ellis Creek	Approximately 2,625 feet downstream of Edgewood Drive	+651	City of Green Bay.
	Approximately 1,105 feet upstream of Edgewood Drive	+670	
Fox River	Approximately 2,500 feet downstream of Interstate 43	+583	City of Green Bay, City of De Pere, Town of Ledgeview, Unincorporated Areas of Brown County, Village of Allouez, Village of Ashwaubenon, Village of Wrightstown.
	Just downstream of State Highway 96	+601	
Lancaster Creek	Approximately 20 feet downstream of Riverview Drive	+586	Village of Howard.
	Approximately 3,980 feet upstream of Shawano Avenue	+623	
Lancaster Creek Tributary	Just upstream of Rockwell Road	+618	Village of Howard.
	Approximately 1,775 feet upstream of Rockwell Road	+630	
Mahon Creek	Approximately 1,125 feet downstream of Nicolet Drive	+586	City of Green Bay.
	Approximately 1,485 feet upstream of Spartan Road	+775	
Middle Branch of Little Suamico River.	Approximately 40 feet downstream of Summit Street	+795	Village of Pulaski.
	Approximately 100 feet upstream of Lincoln Street	+807	
North Branch Ashwaubenon Creek.	At the confluence with South Branch Ashwaubenon Creek	+661	Unincorporated Areas of Brown County, Oneida Tribe, Village of Hobart.
	Just downstream of North County Line Road	+681	
North Branch Bakers Creek	At the confluence with Bakers Creek	+655	Village of Howard.
	Approximately 2,020 feet upstream of its confluence with Bakers Creek.	+665	
North Branch Willow Creek	Approximately 175 feet downstream of Main Street	+629	Village of Bellevue, City of Green Bay.
	Approximately 9,680 feet upstream of Manitowoc Road	+736	
North Tributary South Branch Ashwaubenon Creek.	At the confluence with South Branch Ashwaubenon Creek	+664	Unincorporated Areas of Brown County.
	Approximately 2,200 feet from the confluence of South Branch Ashwaubenon Creek.	+675	
Oneida Creek	Approximately 1,270 feet downstream of County Club Court.	+596	City of Green Bay, Oneida Tribe.
	Approximately 4,755 feet upstream of Country Club Court	+640	
Pioneer Tributary to Duck Creek.	Approximately 895 feet downstream of Cardinal Lane	+591	Village of Howard.
	Approximately 150 feet upstream of Cardinal Lane	+596	
Plum Creek	Approximately 675 feet downstream of Washington Street	+602	Village of Wrightstown, Unincorporated Areas of Brown County.
	Approximately 11,250 feet upstream of Washington Street	+618	
Sorensons Creek	At the confluence with Spring Creek	+602	Village of Bellevue, Town of Ledgeview.
	Approximately 80 feet upstream of Big Creek Road	+683	

Flooding source(s)	Location of referenced elevation	* Elevation in feet (NGVD) + Elevation in feet (NAVD) # Depth in feet above ground Modified	Communities affected
Sorensons Creek Tributary	Approximately 4,720 feet downstream of Santa Monica Drive.	+644	Village of Bellevue.
	Approximately 3,430 feet upstream of Manitowoc Road	+747	
South Branch Ashwaubenon Creek.	Approximately 3,325 feet downstream of Noah Road	+661	Unincorporated Areas of Brown County.
	Approximately 990 feet upstream of Freedom Road	+671	
South Branch Little Suamico River.	Approximately 80 feet downstream of Corporate Way	+783	Village of Pulaski, Unincorporated Areas of Brown County.
	Approximately 1,935 feet upstream of Pelican Drive	+799	
South Tributary to Willow Creek	At the confluence with Willow Creek	+590	Village of Bellevue.
	Approximately 630 feet upstream of Lime Kiln Road	+601	
Spring Creek	Approximately 1,305 feet downstream of Lime Kiln Road	+595	Village of Bellevue.
	Approximately 1,520 feet upstream of Willow Road	+784	
Spring Creek Tributary A	Approximately 950 feet downstream of Madrid Drive	+703	Village of Bellevue.
	Approximately 170 feet upstream of Ontario Road	+743	
Spring Creek Tributary A Ditch	At the confluence with Spring Creek Tributary A	+736	Village of Bellevue.
	Approximately 580 feet upstream of the confluence with Spring Creek Tributary A.	+740	
Spring Creek Tributary B	Approximately 2,910 feet downstream of Cottage Road	+732	Village of Bellevue.
	Approximately 450 feet upstream of Cottage Road	+760	
Suamico River	Approximately 7,880 feet downstream of Lakeview Road	+586	Village of Suamico.
	Approximately 1,150 feet upstream of Bridge Road	+606	
Tributary 1 to Dutchman Creek Southwest Tributary.	Approximately 310 feet downstream of Lost Lane	+642	Village of Ashwaubenon, Oneida Tribe, Village of Hobart.
	Approximately 490 feet upstream of South Packerland Drive.	+665	
Tributary 2 to Dutchman Creek Southwest Tributary.	At the confluence with Dutchman Creek Southwest Tributary.	+642	Village of Ashwaubenon.
	Approximately 2,550 feet upstream of the confluence with Dutchman Creek Southwest Tributary.	+666	
Tributary 3 to Dutchman Creek Southwest Tributary.	At the confluence with Dutchman Creek Southwest Tributary.	+646	Village of Ashwaubenon.
	Approximately 1,950 feet upstream of the confluence with Dutchman Creek Southwest Tributary.	+664	
Trout Creek	Approximately 1,060 feet downstream of North Hillcrest Drive.	+610	Village of Hobart, Oneida Tribe.
	Just upstream of Sunlite Drive	+727	
Unnamed Tributary to Green Bay.	Approximately 525 feet downstream of Nicolet Drive	+588	City of Green Bay.
	Approximately 1,755 feet upstream of Nicolet Drive	+624	
Vanguard Way Tributary to Lancaster Creek.	At the confluence with Lancaster Creek	+610	Village of Howard.
	Approximately 755 feet upstream of the confluence with Lancaster Creek.	+629	
West Verlin Tributary to Willow Creek.	Approximately 1,220 feet downstream of Bellevue Street	+590	Village of Bellevue, City of Green Bay.
	Approximately 2,990 feet upstream of Verlin Road	+597	
Willow Creek	At the confluence with the East River	+590	Village of Bellevue, City of Green Bay.
	Approximately 1,740 feet upstream of Ontario Road	+760	

* National Geodetic Vertical Datum.
+ North American Vertical Datum.
# Depth in feet above ground.

ADDRESSES

City of De Pere
Maps are available for inspection at Building Inspection Department, 335 South Broadway, De Pere, WI 54115.

City of Green Bay
Maps are available for inspection at Department of Public Works, Inspection Division, 100 North Jefferson Street, Room 403, Green Bay, WI 54301–5026.

Oneida Tribe
Maps are available for inspection at Village Office, 2990 South Pine Tree Road, Oneida, WI 54155.

Town of Ledgeview
Maps are available for inspection at Building Department, Ledgeview Municipal Building, 3700 Dickinson Road, De Pere, WI 54115.

Unincorporated Areas of Brown County
Maps are available for inspection at Zoning Department, 320 East Walnut, Northern Building, Room 320, Green Bay, WI 54301.

Flooding source(s)	Location of referenced elevation	* Elevation in feet (NGVD) + Elevation in feet (NAVD) # Depth in feet above ground Modified	Communities affected
Village of Allouez			
Maps are available for inspection at Public Works Department, Municipal Building, 1900 Libal Street, Green Bay, WI 54301–2499.			
Village of Ashwaubenon			
Maps are available for inspection at Public Works Department, Village Hall, 2155 Holmgren Way, Ashwaubenon, WI 54304.			
Village of Bellevue			
Maps are available for inspection at Building, Zoning and Development Department, Village Office, 305 East Walnut, Room 320, Green Bay, WI 54311.			
Village of Hobart			
Maps are available for inspection at Planning Department, Village Office, 2990 South Pine Tree Road, Oneida, WI 54155.			
Village of Howard			
Maps are available for inspection at Department of Code Administration, Village Hall, 2456 Glendale Avenue, Green Bay, WI 54313.			
Village of Pulaski			
Maps are available for inspection at Village Clerk's Office, 421 South St. Augustine Street, Pulaski, WI 54162.			
Village of Suamico			
Maps are available for inspection at Building Inspection Department, Village Hall, 2999 Lakeview Drive, Suamico, WI 54173.			
Village of Wrightstown			
Maps are available for inspection at Building Inspection Department, Village Hall, 529 Main Street, Wrightstown, WI 54180.			

(Catalog of Federal Domestic Assistance No. 97.022, ''Flood Insurance.'')

Dated: March 13, 2009.

Michael K. Buckley,

Acting Assistant Administrator, Mitigation Directorate, Department of Homeland Security, Federal Emergency Management Agency.

[FR Doc. E9–6609 Filed 3–24–09; 8:45 am]

BILLING CODE 9110–12–P

DEPARTMENT OF HOMELAND SECURITY

Federal Emergency Management Agency

44 CFR Part 67

[Docket ID FEMA–2008–0020]

Final Flood Elevation Determinations

AGENCY: Federal Emergency Management Agency, DHS.

ACTION: Final rule.

SUMMARY: Base (1% annual chance) Flood Elevations (BFEs) and modified BFEs are made final for the communities listed below. The BFEs and modified BFEs are the basis for the floodplain management measures that each community is required either to adopt or to show evidence of being already in effect in order to qualify or remain qualified for participation in the National Flood Insurance Program (NFIP).

DATES: The date of issuance of the Flood Insurance Rate Map (FIRM) showing BFEs and modified BFEs for each community. This date may be obtained by contacting the office where the maps are available for inspection as indicated on the table below.

ADDRESSES: The final BFEs for each community are available for inspection at the office of the Chief Executive Officer of each community. The respective addresses are listed in the table below.

FOR FURTHER INFORMATION CONTACT: William R. Blanton, Jr., Engineering Management Branch, Mitigation Directorate, Federal Emergency Management Agency, 500 C Street SW., Washington, DC 20472, (202) 646–3151.

SUPPLEMENTARY INFORMATION: The Federal Emergency Management Agency (FEMA) makes the final determinations listed below for the modified BFEs for each community listed. These modified elevations have been published in newspapers of local circulation and ninety (90) days have elapsed since that publication. The Assistant Administrator of the Mitigation Directorate has resolved any appeals resulting from this notification.

This final rule is issued in accordance with section 110 of the Flood Disaster Protection Act of 1973, 42 U.S.C. 4104, and 44 CFR part 67. FEMA has developed criteria for floodplain management in floodprone areas in accordance with 44 CFR part 60.

Interested lessees and owners of real property are encouraged to review the proof Flood Insurance Study and FIRM available at the address cited below for each community. The BFEs and modified BFEs are made final in the communities listed below. Elevations at selected locations in each community are shown.

National Environmental Policy Act. This final rule is categorically excluded from the requirements of 44 CFR part 10, Environmental Consideration. An environmental impact assessment has not been prepared.

Regulatory Flexibility Act. As flood elevation determinations are not within the scope of the Regulatory Flexibility Act, 5 U.S.C. 601–612, a regulatory flexibility analysis is not required.

Regulatory Classification. This final rule is not a significant regulatory action under the criteria of section 3(f) of Executive Order 12866 of September 30, 1993, Regulatory Planning and Review, 58 FR 51735.

Executive Order 13132, Federalism. This final rule involves no policies that have federalism implications under Executive Order 13132.

Executive Order 12988, Civil Justice Reform. This final rule meets the applicable standards of Executive Order 12988.

List of Subjects in 44 CFR Part 67

Administrative practice and procedure, Flood insurance, Reporting and recordkeeping requirements.

■ Accordingly, 44 CFR part 67 is amended as follows:

PART 67—[AMENDED]

■ 1. The authority citation for part 67 continues to read as follows:

Authority: 42 U.S.C. 4001 *et seq.*; Reorganization Plan No. 3 of 1978, 3 CFR, 1978 Comp., p. 329; E.O. 12127, 44 FR 19367, 3 CFR, 1979 Comp., p. 376.

§ 67.11 [Amended]

■ 2. The tables published under the authority of § 67.11 are amended as follows:

Flooding source(s)	Location of referenced elevation	* Elevation in feet (NGVD) + Elevation in feet (NAVD) # Depth in feet above ground Modified	Communities affected
Alameda County, California and Incorporated Areas Docket Nos.: FEMA–B–7795 and FEMA–B–7763			
Arroyo Las Positas	Approximately 1,155 feet downstream of North Livermore Avenue.	+444	City of Livermore.
	Approximately 1,040 feet downstream of North Livermore Avenue.	+445	
Arroyo Las Positas (Shallow Flooding).	Approximately 530 feet east of the intersection of Airway Boulevard and Terminal Court.	#2	City of Livermore.
Arroyo del Valle	Approximately 0.7 mile downstream of Arroyo Road	+514	Unincorporated Areas of Alameda County.
	Approximately 1,700 feet downstream of Arroyo Road	+531	
Castro Valley Creek (Line I)	Approximately 800 feet downstream of North 4th Street	+125	Unincorporated Areas of Alameda County, City of Hayward.
	Upstream side of Pine Street	+168	
Castro Valley Creek (Line J)	At the confluence with Castro Valley Creek (Line I)	+164	Unincorporated Areas of Alameda County.
	Approximately 70 feet upstream of Seaview Avenue	+332	
Chabot Creek (Line G)	Approximately 0.5 mile downstream of Grove Way	+110	Unincorporated Areas of Alameda County, City of Hayward.
	Approximately 700 feet upstream of Wisteria Street	+172	
Dublin Creek	Approximately 60 feet upstream of the confluence with Line J–1.	+332	City Pleasanton.
	Approximately 255 feet upstream of San Ramon Road	+369	
Line B	At the confluence of Line B and Line D	+11	City Newark.
	At the crossing of Line B and Mowry Avenue	+11	
San Francisco Bay	Along Oakland Inner Harbor, Alameda Harbor, Brooklyn Basin, Alaska Basin, Fartmann Basin, Tidal Canal, San Leandro Bay and San Leandro Channel.	+9	City Alameda.
San Francisco Bay	Area approximately 350 feet south of Neil Armstrong Way and Edward White Way.	+10	City Oakland.
San Francisco Bay	Approximately 1,600 feet northwest of Marshlands Road and Thornton Avenue.	+11	City Fremont.
	Approximately 400 feet east of Quarry Road and SH 84	+11	
San Lorenzo Creek (Shallow Flooding).	Shallow flooding areas between the San Francisco Bay and Center Street.	#1	City San Leandro, City of Hayward, Unincorporated Areas of Alameda County.
Shallow Flooding	Between Pine Street and Castro Valley Boulevard	+169	Unincorporated Areas of Alameda County.
Tassajara Creek (Zone 7)	Approximately 450 feet southwest of Tassajara Road and Shadow Hill Drive.	+404	Unincorporated Areas of Alameda County.
	Approximately 320 feet southwest of Tassajara Road and Shadow Hill Drive.	+406	

* National Geodetic Vertical Datum.
+ North American Vertical Datum.
# Depth in feet above ground.

ADDRESSES

City of Alameda

Maps are available for inspection at City of Alameda Public Works Department, 950 West Mall Square, Room 110, Alameda, CA.

City of Fremont

Maps are available for inspection at City of Fremont Development and Environmental Services Department, Engineering Division, 39550 Liberty Street, Fremont, CA.

City of Hayward

Maps are available for inspection at City of Hayward Engineering and Transportation Division, 777 B Street, Hayward, CA.

City of Livermore

Maps are available for inspection at City of Livermore Community Development Department, 1052 South Livermore Avenue, Livermore, CA.

City of Newark

Maps are available for inspection at City of Newark Administration Building, Building Inspection Division, 37101 Newark Boulevard, Newark, CA.

Flooding source(s)	Location of referenced elevation	* Elevation in feet (NGVD) + Elevation in feet (NAVD) # Depth in feet above ground Modified	Communities affected
City of Oakland			
Maps are available for inspection at City of Oakland Community and Economic Development Department, One Frank Ogawa Plaza, Oakland, CA.			
City of Pleasanton			
Maps are available for inspection at Pleasanton City Hall, 123 Main Street, Pleasanton, CA.			
City of San Leandro			
Maps are available for inspection at City of San Leandro Building Department, 835 East 14th Street, San Leandro, CA.			
Unincorporated Areas of Alameda County			
Maps are available for inspection at Alameda County Public Works Agency, 399 Elmhurst Street, Hayward, CA.			
Kane County, Illinois, and Incorporated Areas FEMA Docket No.: B–7752			
Aurora Chain of Lakes (previously Blackberry Creek Tributary H).	1,000 feet downstream of Prairie Street	+666	City of Aurora, Unincorporated Areas of Kane County.
	Downstream of Indian Trail Road	+683	
Aurora Chain of Lakes Cherry Hills Diversion (previously Blackberry Creek Tributary H).	Confluence with Aurora Chain of Lakes	+667	City of Aurora.
	Confluence with overflow from East Run	+670	
Blackberry Creek	300 feet upstream of county boundary	+660	Unincorporated Areas of Kane County, City of Aurora, Village of Elburn, Village of Montgomery, Village of Sugar Grove.
	1200 feet upstream of State Route 38	+848	
East Run (Previously Blackberry Creek Tributary A).	500 feet upstream of Indian Trail Road	+675	Unincorporated Areas of Kane County, City of Aurora, Village of North Aurora.
	245 feet upstream of Oak Street Culvert	+701	
East Run North Branch	Confluence with East Run	+683	Unincorporated Areas of Kane County, Village of North Aurora.
	Confluence with overflow from East Run	+686	
East Run North Loop	Confluence with East Run	+676	Unincorporated Areas of Kane County, City of Aurora, Village of North Aurora.
	Divergence from East Run	+683	
Elburn Run (Previously Blackberry Creek Tributary D).	Confluence at Blackberry Creek	+739	Unincorporated Areas of Kane County, Village of Elburn.
	200 feet upstream of BCNW Railroad	+834	
Indian Creek	Confluence with Fox River	+635	Unincorporated Areas of Kane County, City of Aurora, City of Batavia.
	FERMI Lab Berm	+737	
Indian Creek Tributary B	Confluence with Indian Creek	+708	Unincorporated Areas of Kane County, City of Aurora.
	Approx. 850 feet upstream of Loreen Drive	+716	
Lake Run (Previously Blackberry Creek Tributary B).	Confluence at Blackberry Creek	+677	Unincorporated Areas of Kane County, Village of North Aurora, Village of Sugar Grove.
	125 feet upstream of Hughes Road	+785	
Lake Run Main Street Branch (Previously Main Street Ditch).	Confluence with Lake Run	+706	Unincorporated Areas of Kane County.
	Approx. 2875 feet upstream of Main Street	+709	
Lake Run Nelson	Confluence with Lake Run	+695	Unincorporated Areas of Kane County.
Lake Branch (Previously Blackberry Creek Tributary B).	At the inlet to Nelson Lake, just downstream of the unnamed road.	+696	

Flooding source(s)	Location of referenced elevation	* Elevation in feet (NGVD) + Elevation in feet (NAVD) # Depth in feet above ground Modified	Communities affected
Lake Run North of I–88 Overflow.	Confluence with Lake Run	+684	Unincorporated Areas of Kane County, City of Aurora, Village of North Aurora.
	Confluence with Overflow from Lake Run	+686	
Lake Run North of I–88 Overflow East Branch.	Confluence with Lake Run North of I88 Overflow	+685	Unincorporated Areas of Kane County, City of Aurora.
	Approx. 1,850 feet upstream of confluence with Lake Run North of I–88 Overflow.	+685	
Lake Run South I–88 Diversion	Confluence with Lake Run	+680	Unincorporated Areas of Kane County.
	Immediately downstream of East-West Tollway	+682	
Prestbury Branch (previously Blackberry Creek Tributary E).	Confluence with Blackberry Creek	+678	Unincorporated Areas of Kane County, Village of Sugar Grove.
	Immediately downstream of Denny Road	+688	
Route 38 Branch	Confluence with Blackberry Creek	+831	Unincorporated Areas of Kane County.
	2,550 feet upstream of Route 38 and 175′ east of Bowgren Circle.	+850	
Seavey Road Run (previously Blackberry Creek Tributary C).	150 feet upstream of State Route 47	+709	Unincorporated Areas of Kane County.
	Approx. 1,050 feet upstream of Main Street	+769	
Seavey Road Run Green Road Branch.	Confluence with Seavey Road Run	+726	Unincorporated Areas of Kane County.
	125 feet upstream of Green Road	+735	
Seavey Road Run Main Street Branch.	Confluence with Seavey Road Run	+721	Unincorporated Areas of Kane County.
	Approx. 150 feet upstream of Main Street	+750	
Selmarten Creek	Immediately upstream of Thompson Lane	+715	City of Aurora, Unincorporated Areas of Kane County.
	County Boundary	+718	
South Tributary	Confluence with Indian Creek	+685	Unincorporated Areas of Kane County.
	County Boundary	+703	
Tollway Tributary	Confluence with Indian Creek	+710	Unincorporated Areas of Kane County.
	Approx. 700 feet upstream of Molitor Road	+714	

* National Geodetic Vertical Datum.
+ North American Vertical Datum.
# Depth in feet above ground.

ADDRESSES

City of Aurora

Maps are available for inspection at Aurora City Planning Department, Aurora City Hall, 44 East Downer Place, Aurora, IL 60507.

City of Batavia

Maps are available for inspection at City of Batavia Engineering Department, 100 North Island Avenue, Batavia, IL 60510.

Unincorporated Areas of Kane County

Maps are available for inspection at Kane County Government Center Bldg., Water Resources Depart., 719 Batavia Avenue, Geneva, IL 60134.

Village of Elburn

Maps are available for inspection at Elburn Village Hall, 301 East North Street, Elburn, IL 60119.

Village of Montgomery

Maps are available for inspection at Montgomery Village Hall, 1300 South Broadway, Montgomery, IL 60538.

Village of North Aurora

Maps are available for inspection at North Aurora Village Hall, 25 E. State Street, North Aurora, IL 60542.

Village of Sugar Grove

Maps are available for inspection at Sugar Grove Village Hall, 10 Municipal Drive, Sugar Grove, IL 60554.

Flooding source(s)	Location of referenced elevation	* Elevation in feet (NGVD) + Elevation in feet (NAVD) # Depth in feet above ground Modified	Communities affected
Allen County, Indiana, and Incorporated Areas FEMA Docket No.: B–7720			
Aboite Creek	Approximately 350 feet downstream of Powell Road	+755	Unincorporated Areas of Allen County.
	Approximately 2,000 feet upstream of Powell Road	+755	
Brown Ditch	At the confluence with Adam Schlemmer-Baker Ditch	+792	Unincorporated Areas of Allen County.
	Approximately 650 feet upstream of the confluence with Adam Schlemmer-Baker Ditch.	+792	
Bullerman Branch	Approximately 775 feet upstream of the confluence with Bullerman Ditch.	+778	Unincorporated Areas of Allen County, City of Fort Wayne.
	Approximately 600 feet downstream of Stellhorn Road	+778	
Durnell Ditch	Approximately 1,056 feet upstream of Interstate Highway 69.	+786	City of Fort Wayne.
	Approximately 615 feet downstream of State Highway 14/ Illinois Road.	+807	
Junk Ditch	At the confluence with St. Mary's River	+759	City of Fort Wayne.
	Approximately 150 feet upstream of Taylor Street	+759	
Lawrence Branch	At the confluence with Flaugh Ditch	+776	City of Fort Wayne.
	Approximately 150 feet upstream of the confluence with Flaugh Ditch.	+776	
Martin Ditch	At the confluence with Maumee River	+748	City of New Haven.
	Approximately 2,900 feet upstream of confluence with Maumee River.	+748	
St. Mary's River	Just downstream of Bostick Road	+772	Unincorporated Areas of Allen County.
	At South County Line Road East	+778	
Willow Creek Branch No. 7	At the confluence with Willow Creek	+824	Unincorporated Areas of Allen County.
	Approximately 1,500 feet downstream of Woods Road	+824	

* National Geodetic Vertical Datum.
+ North American Vertical Datum.
# Depth in feet above ground.

ADDRESSES

City of Fort Wayne

Maps are available for inspection at 1 Main Street, Room 630, Fort Wayne, IN 46802.

City of New Haven

Maps are available for inspection at 815 Lincoln Highway East, New Haven, IN 46774.

Allen County (Unincorporated Areas)

Maps are available for inspection at 1 East Main Street, Room 630, Fort Wayne, IN 46802.

Johnson County, Kansas, and Incorporated Areas FEMA Docket No.: D–7824			
Bain Creek	At the confluence with Niles Creek	+946	Unincorporated Areas of Johnson County.
	Approximately 800 feet upstream of West 183rd Street	+1025	
Bain Creek Tributary B	At the confluence with Bain Creek	+998	Unincorporated Areas of Johnson County, City of Spring Hill.
	At Lone Elm Road	+1023	
Big Bull Creek	At the County Boundary	+936	Unincorporated Areas of Johnson County.
	Approximately 5,060 feet upstream of the confluence of Big Bull Creek Tributary J.	+1011	
Big Bull Creek Tributary A	At the County Boundary	+947	Unincorporated Areas of Johnson County.
	Approximately 8,260 feet upstream of the County Boundary.	+1001	
Big Bull Creek Tributary C	At the confluence with with Big Bull Creek	+938	Unincorporated Areas of Johnson County.
	Approximately 3,130 feet upstream of the confluence with Big Bull Creek.	+946	

Flooding source(s)	Location of referenced elevation	* Elevation in feet (NGVD) + Elevation in feet (NAVD) # Depth in feet above ground Modified	Communities affected
Big Bull Creek Tributary D	At the confluence with Big Bull Creek	+941	Unincorporated Areas of Johnson County, City of Gardner.
	Approximately 950 feet upstream of Interstate Highway 35 Ramp.	+1027	
Big Bull Creek Tributary E	At the confluence with Big Bull Creek	+949	Unincorporated Areas of Johnson County, City of Gardner.
	Approximately 6,050 feet upstream of Waverly Road	+1037	
Big Bull Creek Tributary F	At the confluence with Big Bull Creek	+961	Unincorporated Areas of Johnson County.
	Approximately 660 feet upstream of West 183rd Street	+1019	
Big Bull Creek Tributary H	At the confluence with Big Bull Creek	+981	Unincorporated Areas of Johnson County.
	Approximately 1,350 feet upstream of the confluence with Big Bull Creek.	+986	
Big Bull Creek Tributary I	At the confluence with Big Bull Creek	+988	Unincorporated Areas of Johnson County.
	Approximately 2,180 feet upstream of West 183rd Street	+999	
Blue River	Approximately 5,025 feet downstream of County Boundary.	+865	Unincorporated Areas of Johnson County, City of Leawood, City of Overland Park.
	At the confluence of Coffee Creek	+913	
Blue River Tributary A	At the County Boundary	+905	City of Leawood.
	At West 135th Street	+924	
Blue River Tributary B	At the County Boundary	+865	City of Leawood, City of Overland Park.
	At West 143rd Street	+883	
Blue River Tributary C	At the confluence with Blue River	+898	Unincorporated Areas of Johnson County.
	Approximately 325 feet upstream of West 167th Street	+902	
Blue River Tributary D	At the confluence with Blue River	+900	Unincorporated Areas of Johnson County.
	Approximately 565 feet upstream of the confluence with Blue River.	+900	
Blue River Tributary E	At the confluence with Blue River	+900	Unincorporated Areas of Johnson County.
	Approximately 1,055 feet upstream of the confluence with Blue River.	+904	
Blue River Tributary F	At the confluence with Blue River	+907	City of Overland Park.
	At U.S. Highway 69	+959	
Brush Creek	At State Line Road	+856	City of Fairway, City of Mission Hills, City of Mission Woods, City of Overland Park, City of Prairie Village.
	Approximately 3,600 feet upstream of Nall Avenue	+982	
Camp Branch	Approximately 420 feet upstream of Union Pacific Railroad.	+895	Unincorporated Areas of Johnson County, City of Overland Park.
	Approximately 6,230 feet upstream of West 199th Street	+1057	
Camp Branch Tributary A	Approximately 1,275 feet upstream of the confluence with Camp Branch.	+898	Unincorporated Areas of Johnson County.
	Approximately 900 feet upstream of the confluence of Camp Branch Tributary AB.	+1021	
Camp Branch Tributary AA	At the confluence with Camp Branch Tributary A	+962	Unincorporated Areas of Johnson County.
	Approximately 6,900 feet upstream of the confluence with Camp Branch Tributary A.	+1038	
Camp Branch Tributary C	At the confluence with Camp Branch	+941	Unincorporated Areas of Johnson County.
	Approximately 490 feet upstream of the confluence with Camp Branch.	+945	
Camp Branch Tributary D	At the confluence with Camp Branch	+999	Unincorporated Areas of Johnson County.
	Approximately 1,750 feet upstream of the confluence with Camp Branch.	+1008	

Flooding source(s)	Location of referenced elevation	* Elevation in feet (NGVD) + Elevation in feet (NAVD) # Depth in feet above ground Modified	Communities affected
Camp Branch Tributary E	At the confluence with Camp Branch	+1000	Unincorporated Areas of Johnson County.
	Approximately 815 feet upstream of the confluence of Camp Branch Tributary EA.	+1017	
Camp Branch Tributary EA	At the confluence with Camp Branch Tributary E	+1005	Unincorporated Areas of Johnson County.
	Approximately 380 feet upstream of the confluence with Camp Branch Tributary E.	+1007	
Camp Creek	At the confluence with Cedar Creek	+798	Unincorporated Areas of Johnson County, City of Desoto.
	Approximately 1,070 feet upstream of the confluence of Camp Creek Tributary F.	+966	
Camp Creek Tributary A	At the confluence with Camp Creek	+837	Unincorporated Areas of Johnson County.
	Approximately 2,220 feet upstream of Waverly Road	+882	
Camp Creek Tributary B	Approximately 370 feet upstream of the confluence with Camp Creek.	+923	Unincorporated Areas of Johnson County.
	At the confluence with Camp Creek	+923	
Camp Creek Tributary D	At the confluence with Camp Creek	+938	Unincorporated Areas of Johnson County.
	Approximately 1,135 feet upstream of the confluence with Camp Creek.	+940	
Camp Creek Tributary E	At the confluence with Camp Creek	+942	Unincorporated Areas of Johnson County.
	Approximately 580 feet upstream of the confluence with Camp Creek.	+944	
Captain Creek	At the County Boundary	+820	Unincorporated Areas of Johnson County, City of Desoto.
	At County Line Road	+922	
Captain Creek East	Approximately 30 feet upstream of Burlington Northern & Santa Fe Railway.	+798	Unincorporated Areas of Johnson County.
	Approximately 2,670 feet upstream of West 95th Street	+845	
Captain Creek Tributary E	At the confluence with Captain Creek	+902	Unincorporated Areas of Johnson County.
	Approximately 3,780 feet upstream of Evening Star Road	+922	
Captain Creek Tributary K	At County Line Road	+952	Unincorporated Areas of Johnson County.
	Approximately 1,000 feet upstream of County Line Road	+953	
Cedar Creek	Approximately 800 feet upstream of the confluence of Cedar Creek Tributary B.	+786	Unincorporated Areas of Johnson County, City of Desoto, City of Lenexa, City of Olathe.
	At Interstate Highway 35/U.S. Highway 50	+1024	
Cedar Creek Tributary B	Approximately 200 feet upstream of Cedar Creek Road	+786	City of Desoto.
	Approximately 210 feet upstream of Cedar Creek Road	+786	
Cedar Creek Tributary C	At the confluence with Cedar Creek	+787	City of Desoto.
	Approximately 260 feet upstream of Cedar Creek Road	+794	
Cedar Creek Tributary D	Approximately 2,235 feet upstream of the confluence with Cedar Creek.	+789	City of Desoto.
	At the confluence with Cedar Creek	+789	
Cedar Creek Tributary E	Approximately 350 feet upstream of Cedar Creek Road	+798	City of Desoto.
	At the confluence with Cedar Creek	+798	
Cedar Creek Tributary G	At the confluence with Cedar Creek	+805	Unincorporated Areas of Johnson County, City of Lenexa, City of Olathe.
	Approximately 440 feet upstream of the confluence of Cedar Creek Tributary GA.	+847	
Cedar Creek Tributary H	At the confluence with Cedar Creek	+810	City of Olathe.
	Just upstream of South Bluestem Parkway	+921	
Cedar Creek Tributary HA	Approximately 80 feet upstream of the confluence with Cedar Creek Tributary H.	+883	Unincorporated Areas of Johnson County, City of Olathe.
	Just upstream of State Highway 10	+942	
Cedar Creek Tributary HB	At the confluence with Cedar Creek Tributary H	+889	City of Olathe.
	Approximately 1,650 feet upstream of the confluence with Cedar Creek Tributary H.	+920	

Flooding source(s)	Location of referenced elevation	* Elevation in feet (NGVD) + Elevation in feet (NAVD) # Depth in feet above ground Modified	Communities affected
Cedar Creek Tributary L	At the confluence with Cedar Creek	+872	Unincorporated Areas of Johnson County, City of Olathe.
	Just downstream of West 151st Street	+1016	
Cedar Creek Tributary N	At the confluence with Cedar Creek	+943	City of Olathe.
	At South Ward Cliff Drive	+953	
Cedar Creek Tributary O	At the confluence with Cedar Creek	+943	City of Olathe.
	At Old U.S. Highway 56	+1021	
Cedar Creek Tributary P	At the confluence with Cedar Creek	+974	City of Olathe.
	Approximately 1,070 feet upstream of Burlington Northern & Santa Fe Railway.	+1007	
Cedar Creek Tributary Q	At the confluence with Cedar Creek	+979	Unincorporated Areas of Johnson County, City of Olathe.
	Approximately 270 feet upstream of the confluence of Cedar Creek Tributary QC.	+1061	
Cedar Creek Tributary QA	At the confluence with Cedar Creek Tributary Q	+1008	Unincorporated Areas of Johnson County, City of Olathe.
	Just downstream of Burlington Northern & Santa Fe Railway.	+1037	
Cedar Creek Tributary S	At the confluence with Cedar Creek	+1003	Unincorporated Areas of Johnson County.
	At West 167th Street	+1018	
Cedar Creek Tributary T	At the confluence with Cedar Creek	+1008	Unincorporated Areas of Johnson County, City of Olathe
	Approximately 450 feet upstream of Clare Road	+1031	
Clear Creek	At the confluence with Mill Creek	+784	City of Lenexa, City of Shawnee.
	Approximately 2,040 feet upstream of Clare Road	+948	
Clear Creek Tributary F	At the confluence with Clear Creek	+830	City of Shawnee.
	Just downstream of West 71st Street	+901	
Clear Creek Tributary G	At the confluence with Clear Creek	+909	City of Shawnee, City of Lenexa.
	Approximately 410 feet upstream of Mize Boulevard	+919	
Coffee Creek	At the confluence with Blue River	+913	Unincorporated Areas of Johnson County, City of Olathe, City of Overland Park.
	Approximately 3,800 feet upstream of South Mur-Len Road.	+1049	
Coffee Creek Tributary A	At the confluence with Coffee Creek	+923	Unincorporated Areas of Johnson County.
	Approximately 1,250 feet upstream of the confluence with Coffee Creek.	+930	
Coffee Creek Tributary B	At the confluence with Coffee Creek	+926	Unincorporated Areas of Johnson County.
	Approximately 430 feet upstream of the confluence with Coffee Creek.	+929	
Coffee Creek Tributary C	At the confluence with Coffee Creek	+943	City of Overland Park.
	Approximately 3,220 feet upstream of the confluence with Coffee Creek.	+968	
Coffee Creek Tributary D	At the confluence with Coffee Creek	+959	Unincorporated Areas of Johnson County.
	Approximately 900 feet upstream of the confluence with Coffee Creek.	+960	
Coffee Creek Tributary E	At the confluence with Coffee Creek	+966	City of Overland Park.
	Approximately 370 feet upstream of Quivira Road	+975	
Coffee Creek Tributary F	At the confluence with Coffee Creek	+970	City of Overland Park.
	Approximately 1,340 feet upstream of the confluence with Coffee Creek.	+979	
Coffee Creek Tributary H	At the confluence with Coffee Creek	+982	City of Overland Park.
	Approximately 2,940 feet upstream of the confluence with Coffee Creek.	+997	
Coffee Creek Tributary I	At the confluence with Coffee Creek	+988	Unincorporated Areas of Johnson County.

Flooding source(s)	Location of referenced elevation	* Elevation in feet (NGVD) + Elevation in feet (NAVD) # Depth in feet above ground Modified	Communities affected
	Approximately 2,330 feet upstream of the confluence of Coffee Creek Tributary IA.	+1019	
Coffee Creek Tributary IA	At the confluence with Coffee Creek Tributary I	+1008	Unincorporated Areas of Johnson County.
	Approximately 1,600 feet upstream of the confluence with Coffee Creek Tributary I.	+1025	
Coffee Creek Tributary J	At the confluence with Coffee Creek	+991	Unincorporated Areas of Johnson County.
	Approximately 2,150 feet upstream of the confluence with Coffee Creek.	+1001	
Coffee Creek Tributary K	At the confluence with Coffee Creek	+1004	Unincorporated Areas of Johnson County.
	Approximately 910 feet upstream of Lackman Road	+1013	
Coffee Creek Tributary L	At the confluence with Coffee Creek	+1049	City of Olathe.
	Approximately 1,775 feet upstream of the confluence with Coffee Creek.	+1059	
Coffee Creek Tributary P	At the confluence with Coffee Creek	+1048	City of Olathe.
	Approximately 2,630 feet upstream of the confluence with Coffee Creek.	+1058	
Coon Creek	At the confluence with Mill Creek	+836	City of Lenexa.
	Approximately 9,800 feet upstream of the confluence of Coon Creek Tributary B.	+948	
Coon Creek Tributary B	At the confluence with Coon Creek	+861	City of Lenexa.
	Approximately 1,900 feet upstream of Monticello Road	+927	
Dykes Branch	At State Line Road	+874	City of Prairie Village, City of Leawood.
	At West 83rd Street	+928	
Dykes Branch Tributary B	At the confluence with Dykes Branch	+881	City of Leawood.
	Approximately 1,320 feet upstream of West 85th Terrace	+899	
Hayes Creek	At the confluence with Mill Creek	+769	City of Shawnee.
	Approximately 3,670 feet upstream of Holliday Drive	+791	
Indian Creek	Approximately 600 feet downstream of State Line Road Northbound.	+829	City of Leawood, City of Olathe, City of Overland Park.
	At West 159th Street	+1062	
Indian Creek Bypass No. 1	At the convergence with Indian Creek	+920	City of Overland Park.
	At the divergence from Indian Creek	+923	
Indian Creek Tributary No. 1	Approximately 180 feet downstream of West 103rd Street	+858	City of Overland Park.
	At Roe Avenue	+897	
Indian Creek Tributary No. 2	At the confluence with Indian Creek	+865	City of Overland Park.
	Approximately 1,100 feet upstream of Metcalf Avenue/ U.S. Highway 169.	+923	
Indian Creek Tributary No. 3	Approximately 450 feet upstream of the confluence with Indian Creek.	+869	City of Overland Park.
	Approximately 920 feet upstream of West 93rd Street	+934	
Indian Creek Tributary No. 4	Approximately 50 feet upstream of the confluence with Indian Creek.	+875	City of Overland Park.
	At Antioch Road	+923	
Indian Creek Tributary No. 5	At the confluence with Indian Creek	+889	City of Overland Park.
	Approximately 205 feet upstream of Knox Drive (North)	+951	
Indian Creek Tributary No. 5 Bypass A.	At the convergence with Indian Creek Tributary No. 5	+901	City of Overland Park.
	Approximately 110 feet downstream of the divergence from Indian Creek Tributary No. 5.	+915	
Indian Creek Tributary No. 5 Bypass B.	At the convergence with Indian Creek Tributary No. 5	+929	City of Overland Park.
	At the divergence from Indian Creek Tributary No. 5	+936	
Indian Creek Tributary No. 5 Bypass C.	At the convergence with Indian Creek Tributary No. 5	+936	City of Overland Park.
	At the divergence from Indian Creek Tributary No. 5	+950	
Indian Creek Tributary No. 6	At the confluence with Indian Creek	+1000	City of Olathe.
	Just downstream of West 143rd Street	+1014	
James Branch	Just upstream of the confluence with Indian Creek	+832	City of Leawood.
	Approximately 660 feet upstream of Ensley Lane	+891	
Kill Creek	Approximately 820 feet upstream of West 83rd Street	+792	City of Gardner, City of Desoto, Unincorporated Areas of Johnson County.
	Approximately 5,750 feet upstream of West 167th Street	+1036	
Kill Creek Tributary C	At the confluence with Kill Creek	+798	City of Desoto.

Flooding source(s)	Location of referenced elevation	* Elevation in feet (NGVD) + Elevation in feet (NAVD) # Depth in feet above ground Modified	Communities affected
	Just upstream of Lexington Avenue	+814	
Kill Creek Tributary CA	At the confluence with Kill Creek Tributary C	+814	City of Desoto, Unincorporated Areas of Johnson County.
	At Lexington Avenue	+847	
Kill Creek Tributary F	At the confluence with Kill Creek	+813	Unincorporated Areas of Johnson County.
	Approximately 7,480 feet upstream of the confluence with Kill Creek.	+872	
Kill Creek Tributary G	At the confluence with Kill Creek	+820	Unincorporated Areas of Johnson County.
	Approximately 3,380 feet upstream of String Town Road	+862	
Kill Creek Tributary H	At the confluence with Kill Creek	+832	Unincorporated Areas of Johnson County.
	Just downstream of Homestead Lane	+889	
Kill Creek Tributary I	At the confluence with Kill Creek	+869	Unincorporated Areas of Johnson County.
	Approximately 1,865 feet upstream of the confluence of Kill Creek Tributary IA.	+924	
Kill Creek Tributary J	At the confluence with Kill Creek	+879	Unincorporated Areas of Johnson County.
	At Walnut View Drive	+885	
Kill Creek Tributary K	At the confluence with Kill Creek	+883	City of Gardner, Unincorporated Areas of Johnson County.
	Approximately 240 feet upstream of the confluence of Kill Creek Tributary KC.	+1003	
Kill Creek Tributary KA	At the confluence with Kill Creek Tributary K	+937	City of Gardner.
	Approximately 1,320 feet upstream of the confluence with Kill Creek Tributary K.	+948	
Kill Creek Tributary KC	At the confluence with Kill Creek Tributary K	+1002	City of Gardner, Unincorporated Areas of Johnson County.
	Approximately 2,200 feet upstream of West 167th Street	+1010	
Kill Creek Tributary L	At the confluence with Kill Creek	+887	Unincorporated Areas of Johnson County.
	Approximately 1,030 feet upstream of the confluence with Kill Creek.	+892	
Kill Creek Tributary M	At the confluence with Kill Creek	+905	Unincorporated Areas of Johnson County.
	Approximately 6,210 feet upstream of the confluence with Kill Creek.	+950	
Kill Creek Tributary N	At the confluence with Kill Creek	+919	Unincorporated Areas of Johnson County.
	Approximately 3,080 feet upstream of Gardner Road	+1003	
Kill Creek Tributary O	At the confluence with Kill Creek	+945	Unincorporated Areas of Johnson County.
	Just downstream of West 151st Street	+947	
Kill Creek Tributary P	At the confluence with Kill Creek	+996	Unincorporated Areas of Johnson County.
	At West 159th Street	+1009	
Kill Creek West Tributary C	Approximately 930 feet upstream of the confluence with Kill Creek West Tributary B.	+803	Unincorporated Areas of Johnson County.
	Approximately 1,120 feet upstream of Edgerton Road	+837	
Lake Quivira	Approximately 800 feet downstream of County Boundary	+829	City of Lake Quivira, City of Shawnee.
	Approximately 3,000 feet upstream of Lakeshore South Street.	+854	
Lake Quivira Tributary A	At the confluence with Lake Quivira	+829	City of Lake Quivira, City of Shawnee.
	Approximately 1,930 feet upstream of Lakeshore West Street.	+850	
Lake Quivira Tributary AA	At the confluence with Lake Quivira Tributary A	+829	City of Lake Quivira.
	At Lakeshore West Street	+832	
Little Bull Creek	At the County Boundary	+939	Unincorporated Areas of Johnson County.
	Approximately 700 feet upstream of West 199th Street	+1010	

Flooding source(s)	Location of referenced elevation	* Elevation in feet (NGVD) + Elevation in feet (NAVD) # Depth in feet above ground Modified	Communities affected
Little Bull Creek Tributary A	At the confluence with Little Bull Creek	+953	Unincorporated Areas of Johnson County.
	Approximately 5,105 feet upstream of Cedar Niles Road	+1004	
Little Cedar Creek	At the confluence with Cedar Creek	+845	Unincorporated Areas of Johnson County, City of Olathe.
Just downstream of Old U.S. Highway 56.	+1023.		
Little Cedar Creek Tributary B	At the confluence with Little Cedar Creek	+866	Unincorporated Areas of Johnson County, City of Olathe.
	Approximately 1,430 feet upstream of West 127th Street	+1005	
Little Cedar Creek Tributary C	At the confluence with Little Cedar Creek	+881	Unincorporated Areas of Johnson County, City of Olathe.
	Just downstream of College Boulevard	+980	
Little Cedar Creek Tributary CA	At the confluence with Little Cedar Creek Tributary C	+957	City of Olathe.
	Approximately 1,650 feet upstream of the confluence with Little Cedar Creek Tributary C.	+961	
Little Cedar Creek Tributary D	At the confluence with Little Cedar Creek	+909	City of Olathe, Unincorporated Areas of Johnson County.
	Approximately 3,210 feet upstream of the confluence with Little Cedar Creek.	+938	
Little Cedar Creek Tributary F	At the confluence with Little Cedar Creek	+973	City of Olathe.
	Just downstream of West Santa Fe Street	+978	
Little Mill Creek	At the confluence with Mill Creek	+792	City of Lenexa, City of Shawnee.
	At Brentwood Drive	+981	
Little Mill Creek Tributary A	At the confluence with Little Mill Creek	+792	City of Shawnee.
	At Midland Drive	+806	
Little Mill Creek Tributary B	At the confluence with Little Mill Creek	+858	City of Shawnee.
	Approximately 1,720 feet upstream of the confluence with Little Mill Creek.	+871	
Little Mill Creek Tributary C	Approximately 260 feet upstream of the confluence with Little Mill Creek.	+861	City of Shawnee.
	Approximately 460 feet upstream of the confluence with Little Mill Creek.	+865	
Little Mill Creek Tributary D	At the confluence with Little Mill Creek	+882	City of Shawnee.
	Approximately 2,400 feet upstream of West 71st Street	+920	
Little Mill Creek Tributary E	At the confluence with Little Mill Creek	+891	City of Shawnee, City of Lenexa.
	Approximately 940 feet upstream of the confluence with Little Mill Creek.	+896	
Little Mill Creek Tributary F	At the confluence with Little Mill Creek	+897	City of Shawnee, City of Lenexa.
	Approximately 880 feet upstream of the confluence of Little Mill Creek Tributary FA.	+922	
Little Mill Creek Tributary FA	At the confluence with Little Mill Creek Tributary F	+915	City of Shawnee.
	Approximately 430 feet upstream of Blackfish Parkway	+923	
Little Mill Creek Tributary H	At the confluence with Little Mill Creek	+927	City of Lenexa.
	Approximately 1,340 feet upstream of the confluence with Little Mill Creek.	+932	
Little Mill Creek Tributary I	At the confluence with Little Mill Creek	+956	City of Lenexa.
	Approximately 790 feet upstream of Greenway Lane	+961	
Martin Creek	At the confluence with Big Bull Creek	+951	City of Edgerton, Unincorporated Areas of Johnson County.
	Approximately 4,900 feet upstream of Old State Highway 56.	+1022	
Martin Creek Tributary C	At the confluence with Martin Creek	+963	City of Edgerton, Unincorporated Areas of Johnson County.
	Approximately 6,550 feet upstream of Burlington Northern & Santa Fe Railway.	+1013	
Martin Creek Tributary CA	At the confluence with Martin Creek Tributary C	+973	City of Edgerton.
	Approximately 2,670 feet upstream of First Street	+1008	
Martin Creek Tributary D	At the confluence with Martin Creek	+972	Unincorporated Areas of Johnson County.

Flooding source(s)	Location of referenced elevation	* Elevation in feet (NGVD) + Elevation in feet (NAVD) # Depth in feet above ground Modified	Communities affected
	Approximately 335 feet upstream of West 183rd Street	+1022	
Martin Creek Tributary E	At the confluence with Martin Creek	+984	Unincorporated Areas of Johnson County.
	Approximately 13,450 feet upstream of 191st Street	+1037	
Martin Creek Tributary F	At the confluence with Martin Creek	+1001	Unincorporated Areas of Johnson County.
	Approximately 5,500 feet upstream of the confluence with Martin Creek.	+1027	
Massey Creek	At State Line Road	+968	Unincorporated Areas of Johnson County.
	Approximately 415 feet upstream of Mission Road	+1003	
Massey Creek Tributary A	At the confluence with Massey Creek	+983	Unincorporated Areas of Johnson County.
	Approximately 4,850 feet upstream of the confluence of Massey Creek Tributary AB.	+1034	
Massey Creek Tributary AA	At the confluence with Massey Creek Tributary A	+985	Unincorporated Areas of Johnson County.
	Approximately 4,070 feet upstream of West 207th Street	+1028	
Massey Creek Tributary AB	At the confluence with Massey Creek Tributary A	+1004	Unincorporated Areas of Johnson County.
	Approximately 4,525 feet upstream of the confluence with Massey Creek Tributary A.	+1027	
Mill Creek	Just upstream of Wilder Road	+769	City of Shawnee, City of Lenexa, City of Olathe, Unincorporated Areas of Johnson County.
	Approximately 2,000 feet upstream of East Cedar Street	+1016	
Mill Creek Tributary A	At the confluence with Mill Creek	+773	City of Shawnee.
	Just downstream of Woodland Drive	+773	
Mill Creek Tributary B	At the confluence with Mill Creek	+785	City of Shawnee.
	Approximately 530 feet upstream of Barker Road	+786	
Mill Creek Tributary D	At the confluence with Mill Creek	+798	City of Shawnee.
	Approximately 1,050 feet upstream of Woodland Drive	+823	
Mill Creek Tributary E	At the confluence with Mill Creek	+803	City of Shawnee, City of Lenexa.
	Approximately 1,800 feet upstream of the confluence of Mill Creek Tributary EB.	+879	
Mill Creek Tributary EA	At the confluence with Mill Creek Tributary E	+874	City of Lenexa.
	Approximately 2,400 feet upstream of the confluence with Mill Creek Tributary E.	+876	
Mill Creek Tributary EB	At the confluence with Mill Creek Tributary E	+874	City of Lenexa, City of Shawnee.
	Just downstream of Barkley Drive	+888	
Mill Creek Tributary G	At the confluence with Mill Creek	+857	City of Lenexa.
	Approximately 1,340 feet upstream of the confluence with Mill Creek.	+870	
Mill Creek Tributary H	At the confluence with Mill Creek	+869	City of Lenexa, City of Olathe, Unincorporated Areas of Johnson County.
	Just downstream of College Boulevard	+968	
Mill Creek Tributary HA	At the confluence with Mill Creek Tributary H	+896	City of Lenexa.
	Approximately 790 feet upstream of Renner Boulevard	+940	
Mill Creek Tributary HB	At the confluence with Mill Creek Tributary H	+957	City of Lenexa.
	Just downstream of Eicher Drive	+982	
Mill Creek Tributary J	At the confluence with Mill Creek	+919	City of Olathe.
	Approximately 1,940 feet upstream of the confluence with Mill Creek.	+926	
Mill Creek Tributary L	At the confluence with Mill Creek	+932	City of Olathe.
	Just downstream of South Ridgeview Road	+945	
Mill Creek Tributary M	Approximately 720 feet upstream of Burlington & Northern Santa Fe Railway.	+950	City of Olathe.
	At the confluence with Mill Creek	+950	
Mill Creek Tributary N	Approximately 580 feet upstream of South Nelson Road	+956	City of Olathe.
	At the confluence with Mill Creek	+956	
Mill Creek Tributary NA	At the confluence with Mill Creek Tributary N	+956	City of Olathe.
	Just downstream of South Nelson Road	+957	
Mill Creek Tributary O	At the confluence with Mill Creek	+959	City of Olathe.
	Just downstream of East Kansas City Road	+1007	

Flooding source(s)	Location of referenced elevation	* Elevation in feet (NGVD) + Elevation in feet (NAVD) # Depth in feet above ground Modified	Communities affected
Negro Creek	At the confluence with Blue River	+868	City of Overland Park, City of Leawood.
	At U.S. Highway 69	+989	
Negro Creek Tributary A	At the confluence with Negro Creek	+870	City of Leawood, City of Overland Park.
	Approximately 300 feet upstream of the confluence of Negro Creek Tributary AC.	+926	
Negro Creek Tributary AB	At the confluence with Negro Creek Tributary A	+921	City of Leawood.
	Approximately 1,050 feet upstream of the confluence with Negro Creek Tributary A.	+926	
Negro Creek Tributary AC	At the confluence with Negro Creek Tributary A	+923	City of Leawood.
	At West 143rd Street	+924	
Negro Creek Tributary B	At the confluence with Negro Creek	+888	City of Leawood.
	Approximately 740 feet upstream of the confluence with Negro Creek.	+892	
Negro Creek Tributary C	At the confluence with Negro Creek	+908	City of Leawood.
	At Nall Avenue	+917	
Negro Creek Tributary D	At the confluence with Negro Creek	+923	City of Overland Park.
	At West 157th Street	+947	
Negro Creek Tributary E	At the confluence with Negro Creek	+925	City of Overland Park.
	At West 156th Street	+932	
Niles Creek	At the County Boundary	+940	Unincorporated Areas of Johnson County, City of Gardner.
	Approximately 100 feet upstream of U.S. Highway 56	+1032	
Niles Creek Tributary A	At the confluence with Niles Creek	+974	Unincorporated Areas of Johnson County.
	Approximately 4,310 feet upstream of the confluence with Niles Creek.	+986	
Niles Creek Tributary C	At the confluence with Niles Creek	+1003	Unincorporated Areas of Johnson County.
	Approximately 3,020 feet upstream of the confluence with Niles Creek.	+1011	
North Branch Indian Creek	Approximately 220 feet upstream of the confluence with Indian Creek.	+906	City of Lenexa, City of Overland Park.
	Approximately 2,920 feet upstream of West 103rd Street	+979	
North Branch Indian Creek Tributary A.	At the confluence with North Branch Indian Creek	+927	City of Overland Park.
	Just downstream of West 103rd Street	+944	
North Branch Indian Creek Tributary B.	At the confluence with North Branch Indian Creek	+937	City of Overland Park, City of Lenexa.
	Approximately 600 feet upstream of Hauser Street	+980	
Pickering Creek	At the confluence with Captain Creek	+922	Unincorporated Areas of Johnson County.
	Approximately 3,920 feet upstream of West 167th Street	+979	
Pickering Creek Tributary A	At the confluence with Pickering Creek	+940	Unincorporated Areas of Johnson County.
	Approximately 3,150 feet upstream of the confluence of Pickering Creek Tributary AA.	+959	
Rock Creek	At the confluence with Brush Creek	+868	City of Mission, City of Fairway, City of Mission Hills, City of Roeland Park.
	Approximately 400 feet upstream of the confluence with Rock Creek Tributary G.	+960	
Rock Creek Tributary A	Approximately 100 feet downstream of Shawnee Mission Parkway.	+892	City of Roeland Park, City of Fairway.
	Approximately 3,000 feet upstream of Shawnee Mission Parkway.	+936	
Rock Creek Tributary B	Approximately 300 feet downstream of Shawnee Mission Parkway.	+898	City of Roeland Park, City of Fairway.
	Approximately 1,100 feet upstream of West 53rd Street	+943	
Rock Creek Tributary D	Approximately 450 feet downstream of West 54th Terrace	+931	City of Roeland Park.
	Approximately 560 feet upstream of Sherwood Drive	+963	
Rock Creek Tributary E	At Johnson Drive	+935	City of Roeland Park, City of Mission.
	At West 57th Street	+940	
Spoon Creek	At the confluence with Kill Creek	+821	Unincorporated Areas of Johnson County.
	Approximately 1,280 feet upstream of West 167th Street	+988	

Flooding source(s)	Location of referenced elevation	* Elevation in feet (NGVD) + Elevation in feet (NAVD) # Depth in feet above ground Modified	Communities affected
Spoon Creek Tributary B	At the confluence with Spoon Creek	+919	Unincorporated Areas of Johnson County.
	Approximately 4,380 feet upstream of Sunflower Road	+937	
Spoon Creek Tributary C	At the confluence with Spoon Creek	+927	Unincorporated Areas of Johnson County.
	Approximately 450 feet upstream of the confluence with Spoon Creek.	+928	
Spoon Creek Tributary E	At the confluence with Spoon Creek	+958	Unincorporated Areas of Johnson County.
	Approximately 3,120 feet upstream of Sunflower Road	+975	
Spring Creek	At West 215th Street	+940	Unincorporated Areas of Johnson County, City of Spring Hill.
	Approximately 3,000 feet upstream of West 199th Street	+1029	
Sweetwater Creek	Approximately 11,000 feet downstream of West 215th Street.	+960	Unincorporated Areas of Johnson County, City of Spring Hill.
	Approximately 500 feet upstream of West 207th Street	+1031	
Sweetwater Creek Tributary A	At the confluence with Sweetwater Creek	+997	Unincorporated Areas of Johnson County, City of Spring Hill.
	Approximately 5,180 feet upstream of the confluence with Sweetwater Creek.	+1029	
Sweetwater Creek Tributary B	At the confluence with Sweetwater Creek	+997	Unincorporated Areas of Johnson County, City of Spring Hill.
	Approximately 2,775 feet upstream of the confluence with Sweetwater Creek.	+1012	
Ten Mile Creek	At West 215th Street	+1013	Unincorporated Areas of Johnson County.
	Approximately 405 feet upstream of Lackman Road	+1024	
Tomahawk Creek	At the confluence with Indian Creek	+843	City of Leawood.
	At College Boulevard	+844	
Tomahawk Creek Tributary No. 12B1.	Approximately 70 feet upstream of the confluence with Tomahawk Creek Tributary No. 12.	+924	City of Overland Park.
	Just upstream of West 133rd Street	+925	
Tomahawk Creek Tributary No. 13.	At the confluence with Tomahawk Creek	+930	City of Overland Park.
	Approximately 1,050 feet upstream of the confluence with Tomahawk Creek.	+932	
Tomahawk Creek Tributary No. 13B1.	At the confluence with Tomahawk Creek	+934	City of Overland Park.
	Approximately 50 feet upstream of the confluence with Tomahawk Creek.	+934	
Tomahawk Creek Tributary No. 4.	Approximately 100 feet upstream of the confluence with Tomahawk Creek.	+865	City of Leawood.
	Approximately 400 feet upstream of the confluence with Tomahawk Creek.	+865	
Tomahawk Creek Tributary No. 9.	Approximately 220 feet upstream of the confluence with Tomahawk Creek.	+891	City of Overland Park.
	Approximately 820 feet upstream of the confluence with Tomahawk Creek.	+893	
Tucker Branch	At West 215th Street	+1000	Unincorporated Areas of Johnson County.
	Approximately 5,025 feet upstream of Renner Road	+1022	
Turkey Creek	Approximately 125 feet downstream of Lamar Avenue	+844	City of Overland Park, City of Lenexa, City of Merriam, City of Mission, City of Shawnee.
	Approximately 1,525 feet upstream of Nieman Road	+1007	
Turkey Creek Tributary C	At the confluence with Turkey Creek	+895	City of Merriam.
	Approximately 1,225 feet upstream of Merriam Drive	+897	
Turkey Creek Tributary F	At the confluence with Turkey Creek	+934	City of Merriam, City of Shawnee.
	Approximately 200 feet upstream of Flint Street	+974	
Turkey Creek Tributary J	At East Frontage Road	+977	City of Overland Park.
	Approximately 1,880 feet upstream of Mastin Street	+992	

Flooding source(s)	Location of referenced elevation	* Elevation in feet (NGVD) + Elevation in feet (NAVD) # Depth in feet above ground Modified	Communities affected
Wolf Creek	At the confluence with Blue River	+913	City of Overland Park, Unincorporated Areas of Johnson County.
	At West 183rd Street	+1041	
Wolf Creek Tributary B	At the confluence with Wolf Creek	+918	City of Overland Park, Unincorporated Areas of Johnson County.
	At U.S. Highway 69	+953	
Wolf Creek Tributary C	At the confluence with Wolf Creek	+934	Unincorporated Areas of Johnson County.
	At West 207th Street	+1045	
Wolf Creek Tributary CC	At the confluence with Wolf Creek Tributary C	+1018	Unincorporated Areas of Johnson County.
	At Antioch Road	+1019	
Wolf Creek Tributary CD	At the confluence with Wolf Creek Tributary C	+1034	Unincorporated Areas of Johnson County.
	At Antioch Road	+1042	
Wolf Creek Tributary D	At the confluence with Wolf Creek	+939	Unincorporated Areas of Johnson County.
	Approximately 1,140 feet upstream of the confluence with Wolf Creek.	+953	
Wolf Creek Tributary E	At the confluence with Wolf Creek	+941	Unincorporated Areas of Johnson County.
	At West 199th Street	+1026	
Wolf Creek Tributary EA	At the confluence with Wolf Creek Tributary E	+1006	Unincorporated Areas of Johnson County.
	At Quivira Road	+1025	
Wolf Creek Tributary EB	At the confluence with Wolf Creek Tributary E	+1021	Unincorporated Areas of Johnson County.
	At West 199th Street	+1028	
Wolf Creek Tributary F	At the confluence with Wolf Creek	+950	Unincorporated Areas of Johnson County.
	Approximately 720 feet upstream of the confluence with Wolf Creek.	+953	
Wolf Creek Tributary G	At the confluence with Wolf Creek	+966	Unincorporated Areas of Johnson County.
	At West 191st Street	+1024	
Wolf Creek Tributary GA	At the confluence with Wolf Creek Tributary G	+993	Unincorporated Areas of Johnson County.
	At West 191st Street	+1008	
Wolf Creek Tributary H	At the confluence with Wolf Creek	+990	Unincorporated Areas of Johnson County.
	At West 183rd Street	+997	
Wolf Creek Tributary I	At the confluence with Wolf Creek	+997	Unincorporated Areas of Johnson County.
	At West 183rd Street	+999	
Wolf Creek Tributary J	At the confluence with Wolf Creek	+1003	Unincorporated Areas of Johnson County.
	Approximately 2,550 feet upstream of West 183rd Street	+1021	
Wolf Creek Tributary K	At the confluence with Wolf Creek	+1012	Unincorporated Areas of Johnson County.
	Approximately 1,100 feet upstream of the confluence with Wolf Creek.	+1015	
Wolf Creek Tributary L	At the confluence with Wolf Creek	+1016	Unincorporated Areas of Johnson County.
	Approximately 1,220 feet upstream of the confluence with Wolf Creek.	+1034	
Wolf Creek Tributary M	At the confluence with Wolf Creek	+1018	Unincorporated Areas of Johnson County.
	Approximately 925 feet upstream of the confluence with Wolf Creek.	+1019	
Wolf Creek Tributary N	At the confluence with Wolf Creek	+1020	Unincorporated Areas of Johnson County.
	Approximately 4,970 feet upstream of the confluence with Wolf Creek.	+1041	
Wolf Creek Tributary NA	At the confluence with Wolf Creek Tributary N	+1025	Unincorporated Areas of Johnson County.

Flooding source(s)	Location of referenced elevation	* Elevation in feet (NGVD) + Elevation in feet (NAVD) # Depth in feet above ground Modified	Communities affected
	Approximately 1,000 feet upstream of the confluence with Wolf Creek Tributary N.	+1040	

* National Geodetic Vertical Datum.
+ North American Vertical Datum.
# Depth in feet above ground.

ADDRESSES

City of Desoto
Maps are available for inspection at 33150 W. 83rd Street, De Soto, KS 66018.

City of Edgerton
Maps are available for inspection at 404 E. Nelson, Edgerton, KS 66021.

City of Fairway
Maps are available for inspection at 5252 Belinder Road, Fairway, KS 66205.

City of Gardner
Maps are available for inspection at 120 E. Main Street, Gardner, KS 66030.

City of Lake Quivira
Maps are available for inspection at 10 Crescent Boulevard, Lake Quivira, KS 66217.

City of Leawood
Maps are available for inspection at 4820 Town Center Drive, Leawood, KS 66211.

City of Lenexa
Maps are available for inspection at 12350 W. 87th Street Parkway, Lenexa, KS 66215.

City of Merriam
Maps are available for inspection at 9000 W. 62nd Terrace, Merriam, KS 66202.

City of Mission
Maps are available for inspection at 6090 Woodson, Mission, KS 66202.

City of Mission Hills
Maps are available for inspection at 6300 State Line Road, Mission Hills, KS 66208.

City of Mission Woods
Maps are available for inspection at 4700 Rainbow Boulevard, Westwood, KS 66205.

City of Olathe
Maps are available for inspection at 100 W. Santa Fe Drive, Olathe, KS 66061.

City of Overland Park
Maps are available for inspection at 8500 Santa Fe Drive, Overland Park, KS 66212.

City of Prairie Village
Maps are available for inspection at 7700 Mission Road, Prairie Village, KS 66208.

City of Roeland Park
Maps are available for inspection at 4600 W. 51st Street, Roeland Park, KS 66205.

City of Shawnee
Maps are available for inspection at 11110 Johnson Drive, Shawnee, KS 66203.

City of Spring Hill
Maps are available for inspection at 401 N. Madison Street, Spring Hill, KS 66083.

Unincorporated Areas of Johnson County
Maps are available for inspection at 111 S. Cherry Street, Suite 3500, Olathe, KS 66061.

Orange County, New York (All Jurisdictions)
Docket Nos.: FEMA–B–7741 and FEMA–B–7765

Black Meadow Creek	At confluence with Otter Kill	+377	Town of Goshen.
	Approximately 800 feet upstream of confluence with Otter Kill.	+377	
Cold Brook	At confluence with Neversink River	+435	Town of Deer Park, City of Port Jervis.
	Approximately 300 feet downstream of Beach Road	+438	
Delaware River	At County boundary	+426	Town of Deer Park, City of Port Jervis.
	Approximately 645 feet upstream of Rail Road	+470	
Monhagen Brook	Approximately 0.4 mile downstream of Abe Isseks Drive	+465	City of Middletown, Town of Wallkill, Town of Wawayanda.
	Approximately 1,200 feet upstream of Mt. Hope Road	+606	
Moodna Creek	Approximately 1,100 feet downstream of spillway at Towns of Blooming Grove and Cornwall corporate limits.	+260	Town of Blooming Grove, Town of Cornwall, Village of Washingtonville.
	At the confluence with Otter Kill and Cromline Creek	+319	

Flooding source(s)	Location of referenced elevation	* Elevation in feet (NGVD) + Elevation in feet (NAVD) # Depth in feet above ground Modified	Communities affected
Neversink River	At the confluence with Delaware River	+426	City of Port Jervis, Town of Deer Park.
	Approximately 250 feet upstream of Paradise Road	+649	
Otter Kill	Approximately 1.2 miles upstream of Sora Wells Trail	+365	Town of Goshen.
	Approximately 1.4 miles upstream of State Route 17	+470	
Otter Kill Tributary 12	At the confluence with Otter Kill	+365	Town of Goshen.
	Approximately 150 feet upstream of Craigville Road	+395	
Perry Creek	At the confluence with Moodna Creek	+306	Town of Blooming Grove, Village of Washingtonville.
	Approximately 500 feet upstream of Clove Road	+537	
Pine Tree Brook	At confluence with Ramapo River Reach 2	+582	Village of Monroe.
	Approximately 25 feet upstream of State Route 17M	+582	
Quaker Creek	Approximately 100 feet upstream of confluence with Browns Creek.	+398	Village of Florida.
	Approximately 150 feet upstream of Roosevelt Avenue	+456	
Ramapo River Reach 2	Approximately 2,150 feet downstream of Arden House Road.	+518	Village of Harriman, Town of Monroe, Village of Woodbury, Village of Monroe.
	Approximately 1.4 miles upstream of Reynolds Road	+838	
Ramapo River Reach 2 Tributary 1.	At confluence with Ramapo River Reach 2	+519	Village of Harriman, Village of Woodbury.
	Approximately 1,100 feet upstream of Meadow Avenue	+519	
Ramapo River Reach 2 Tributary 26.	At confluence with Ramapo River Reach 2	+582	Village of Monroe.
	Approximately 1,430 feet upstream of confluence with Ramapo River Reach 2.	+582	
Rio Grande	Approximately 300 feet downstream of State Route 17	+412	Town of Goshen, Village of Goshen.
	Approximately 650 feet upstream of Greenwich Avenue	+430	
Rio Grande Tributary 4	At the confluence with Rio Grande	+427	Village of Goshen.
	Approximately 2,160 feet upstream of Scotchtown Road	+440	
Satterly Creek	At the confluence with Moodna Creek	+312	Town of Blooming Grove, Village of South Blooming Grove, Village of Washingtonville.
	At the confluence of Satterly Creek Tributary 5	+346	
South Tributary to Wawayanda Creek.	At the confluence with Wawayanda Creek	+521	Town of Warwick, Village of Warwick.
	Approximately 2 miles upstream of Galloway Road	+778	
Summit Brook	Approximately 1,318 feet downstream of East Lake Road	+562	Village of Tuxedo Park.
	Approximately 50 feet downstream of East Lake Road	+562	
Wallkill River Tributary 6 Reach 1.	At the confluence with Wallkill River	+331	Town of Montgomery.
	Approximately 1,800 feet upstream of State Route 17K	+392	
Wawayanda Creek	Approximately 2,626 feet downstream of Howe Street	+507	Village of Warwick, Town of Warwick.
	Approximately 1.0 mile upstream of Forester Avenue	+522	
Woodbury Creek	Approximately 193 feet upstream of Creamery Road	+251	Town of Cornwall, Village of Woodbury.
	Approximately 3,300 feet upstream of Estrada Road	+487	
Woodbury Creek Tributary 11	At the confluence with Woodbury Creek	+487	Village of Woodbury.
	Approximately 2,665 feet upstream of Dunderburg Road	+771	

* National Geodetic Vertical Datum.
+ North American Vertical Datum.
# Depth in feet above ground.

ADDRESSES

City of Middletown
Maps are available for inspection at Middletown City Hall, 16 James Street, Middletown, New York.

City of Port Jervis
Maps are available for inspection at Port Jervis City Municipal Building, 14–20 Hammond Street, Port Jervis, New York.

Town of Blooming Grove
Maps are available for inspection at Blooming Grove Town Hall, 6 Horton Road, Blooming Grove, New York.

Town of Cornwall
Maps are available for inspection at Cornwall Town Hall, 183 Main Street, Cornwall, New York.

Town of Deer Park

Flooding source(s)	Location of referenced elevation	* Elevation in feet (NGVD) + Elevation in feet (NAVD) # Depth in feet above ground Modified	Communities affected

Maps are available for inspection at Deer Park Town Building Inspector's Office, 420 Route 209, Hugenot, New York.

Town of Goshen
Maps are available for inspection at Goshen Town Hall, 41 Webster Street, Goshen, New York.

Town of Monroe
Maps are available for inspection at Monroe Town Building Department, 11 Stage Road, Monroe, New York.

Town of Montgomery
Maps are available for inspection at Montgomery Town Hall, 110 Bracken Road, Montgomery, New York.

Town of Wallkill
Maps are available for inspection at Wallkill Town Hall, 99 Tower Drive, Middletown, New York.

Town of Warwick
Maps are available for inspection at Warwick Town Municipal Building, 132 Kings Highway, Warwick, New York.

Town of Wawayanda
Maps are available for inspection at Wawayanda Town Hall, 80 Ridgeberry Hill Road, Slate Hill, New York.

Town of Woodbury
Maps are available for inspection at WoodburyTown Hall, 511 Route 32, Highland Mills, New York.

Village of Florida
Maps are available for inspection at Florida Village Hall, 33 South Main Street, Florida, New York.

Village of Goshen
Maps are available for inspection at Goshen Village Hall, 276 Main Street, Goshen, New York.

Village of Harriman
Maps are available for inspection at Harriman Village Hall, 1 Church Street, Harriman, New York.

Village of Monroe
Maps are available for inspection at Monroe Village Hall, 7 Stage Road, Monroe, New York.

Village of South Blooming Grove
Maps are available for inspection at the South Blooming Grove Village Hall, 811 State Route 208, Monroe, New York.

Village of Tuxedo Park
Maps are available for inspection at Tuxedo Park Village Hall, 80 Lorillard Road, Tuxedo Park, New York.

Village of Warwick
Maps are available for inspection at Warwick Village Hall, 77 Main Street, Warwick, New York.

Village of Washingtonville
Maps are available for inspection at Washingtonville Village Hall, 29 West Main Street, Washingtonville, New York.

Hertford County, North Carolina and Incorporated Areas
Docket Nos.: FEMA–B–7779 and FEMA–B–1010

Ahoskie Creek	At the confluence with Wiccacon River and Bear Swamp	+11	Unincorporated Areas of Hertford County, Town of Ahoskie.
	Approximately 0.7 mile upstream of the confluence with Ahoskie Creek Tributary 8.	+62	
Ahoskie Creek Tributary 1	At the confluence with Ahoskie Creek	+18	Unincorporated Areas of Hertford County.
	Approximately 1,325 feet upstream of DT Road (State Road 1419).	+23	
Ahoskie Creek Tributary 7	At the confluence with Ahoskie Creek	+52	Unincorporated Areas of Hertford County.
	Approximately 0.5 mile upstream of the confluence with Ahoskie Creek.	+57	
Banks Creek	At the confluence with Kirby Creek	+17	Unincorporated Areas of Hertford County.
	Approximately 960 feet upstream of the confluence of Banks Creek Tributary 1.	+18	
Banks Creek Tributary 1	At the confluence with Banks Creek	+17	Unincorporated Areas of Hertford County.
	Approximately 0.9 mile upstream of the confluence with Banks Creek.	+25	
Barbeque Swamp	At the confluence with Chinkapin Creek and Chinkapin Swamp.	+13	Unincorporated Areas of Hertford County.
	At the Hertford/Bertie County boundary	+19	
Bear Swamp	At the confluence with Wiccacon River and Ahoskie Creek	+11	Unincorporated Areas of Hertford County.
	Approximately 1,111 feet upstream of Ahoskie Cofield Road (State Road 1403).	+34	
Bells Branch	At the confluence with Potecasi Creek	+19	Unincorporated Areas of Hertford County.

Flooding source(s)	Location of referenced elevation	* Elevation in feet (NGVD) + Elevation in feet (NAVD) # Depth in feet above ground Modified	Communities affected
	Approximately 2.9 miles upstream of the confluence with Potecasi Creek.	+33	
Bluewater Branch	At the confluence with Cutawhiskie Creek	+28	Unincorporated Areas of Hertford County.
	Approximately 0.5 mile upstream of the confluence of Bluewater Branch Tributary 2.	+43	
Bluewater Branch Tributary 1	At the confluence with Bluewater Branch	+32	Unincorporated Areas of Hertford County.
	Approximately 0.5 mile upstream of Leweter Farm Road (State Road 1139).	+43	
Bluewater Branch Tributary 2	At the confluence with Bluewater Branch	+40	Unincorporated Areas of Hertford County.
	Approximately 0.4 mile upstream of the confluence with Bluewater Branch.	+49	
Brooks Creek	At the confluence with Wiccacon River	+7	Unincorporated Areas of Hertford County.
	Approximately 1.1 miles upstream of Bazemore Road (State Road 1445).	+22	
Buckhorn Creek	At the confluence with Chowan River	+12	Unincorporated Areas of Hertford County, Town of Como.
	Approximately 1.1 miles upstream of Buckhorn Church Road (State Road 1316).	+59	
Catherine Creek	At the confluence with Chowan River	+7	Unincorporated Areas of Hertford County.
	Approximately 1.1 miles upstream of the confluence of Catherine Creek Tributary 1.	+20	
Catherine Creek Tributary 1	At the confluence with Catherine Creek	+7	Unincorporated Areas of Hertford County.
	Approximately 0.4 mile upstream of the confluence with Catherine Creek.	+11	
Chinkapin Creek	At the confluence with Wiccacon River	+7	Unincorporated Areas of Hertford County.
	At the confluence of Chinkapin Swamp and Barbeque Swamp.	+13	
Chinkapin Creek Tributary 1	At the confluence with Chinkapin Creek	+7	Unincorporated Areas of Hertford County.
	Approximately 0.9 mile upstream of the confluence of Chinkapin Creek Tributary 1A.	+17	
Chinkapin Creek Tributary 1A	At the confluence with Chinkapin Creek Tributary 1	+7	Unincorporated Areas of Hertford County.
	Approximately 0.6 mile upstream of the confluence with Chinkapin Creek Tributary 1.	+17	
Chinkapin Creek Tributary 2	At the confluence with Chinkapin Creek	+11	Unincorporated Areas of Hertford County.
	Approximately 1,390 feet upstream of Big Mill Road (State Road 1432).	+14	
Chinkapin Creek Tributary 3	At the confluence with Chinkapin Creek	+12	Unincorporated Areas of Hertford County.
	Approximately 0.6 mile upstream of the confluence with Chinkapin Creek.	+16	
Chinkapin Swamp	At the confluence with Barbeque Swamp and Chinkapin Creek.	+13	Unincorporated Areas of Hertford County.
	Approximately 0.9 mile upstream of the confluence with Chinkapin Creek and Barbeque Swamp.	+16	
Chowan River	At the Hertford/Bertie/Chowan County boundary	+7	Unincorporated Areas of Hertford County, Town of Winton.
	At the Virginia/North Carolina state boundary	+13	
Chowan River Tributary 1	At the confluence with Chowan River	+7	Unincorporated Areas of Hertford County.
	Approximately 1.3 miles upstream of the confluence with Chowan River.	+39	
Cutawhiskie Creek	At the confluence with Potecasi Creek	+26	Unincorporated Areas of Hertford County.
	Approximately 1.2 miles upstream of Fennell Road (State Road 1155).	+55	

Flooding source(s)	Location of referenced elevation	* Elevation in feet (NGVD) + Elevation in feet (NAVD) # Depth in feet above ground Modified	Communities affected
Cutawhiskie Creek Tributary 1	At the confluence with Cutawhiskie Creek	+36	Unincorporated Areas of Hertford County.
	Approximately 0.9 mile upstream of the confluence with Cutawhiskie Creek.	+40	
Cutawhiskie Creek Tributary 2	At the confluence with Cutawhiskie Creek	+39	Unincorporated Areas of Hertford County.
	Approximately 0.8 mile upstream of the confluence with Cutawhiskie Creek.	+43	
Cutawhiskie Creek Tributary 3	At the confluence with Cutawhiskie Creek	+49	Unincorporated Areas of Hertford County.
	Approximately 0.5 mile upstream of the confluence with Cutawhiskie Creek.	+51	
Deep Creek	At the confluence with Chowan River	+8	Unincorporated Areas of Hertford County.
	Approximately 1.2 miles upstream of the confluence of Deep Creek Tributary 1.	+21	
Deep Creek Tributary 1	At the confluence with Deep Creek	+11	Unincorporated Areas of Hertford County.
	Approximately 0.6 mile upstream of the confluence with Deep Creek.	+23	
Deep Creek Tributary 2	At the confluence with Deep Creek	+11	Unincorporated Areas of Hertford County, Village of Cofield.
	Approximately 1.2 miles upstream of the confluence with Deep Creek.	+22	
Deep Swamp	At the confluence with Chowan River	+7	Unincorporated Areas of Hertford County.
	Approximately 1.4 miles upstream of Cullen Road (State Road 1439).	+55	
Deep Swamp Tributary 1	At the confluence with Deep Swamp	+7	Unincorporated Areas of Hertford County.
	Approximately 1.5 miles upstream of the confluence with Deep Swamp.	+26	
Deep Swamp Tributary 2	At the confluence with Deep Swamp	+8	Unincorporated Areas of Hertford County.
	Approximately 0.9 mile upstream of the confluence with Deep Swamp.	+29	
Deep Swamp Tributary 3	At the confluence with Deep Swamp	+8	Unincorporated Areas of Hertford County.
	Approximately 1.2 miles upstream of the confluence with Deep Swamp.	+41	
Fort Branch	At the confluence with Ahoskie Creek	+46	Unincorporated Areas of Hertford County.
	At the Hertford/Bertie County boundary	+55	
Hares Branch	At the confluence with Meherrin River	+15	Unincorporated Areas of Hertford County, Town of Murfreesboro.
	Approximately 0.8 mile upstream of U.S. Highway 158	+25	
Horse Swamp	At the confluence with Bear Swamp	+20	Unincorporated Areas of Hertford County.
	Approximately 0.7 mile upstream of the Railroad	+35	
Indian Creek	At the confluence with Cutawhiskie Creek	+28	Unincorporated Areas of Hertford County.
	Approximately 0.4 mile upstream of Flea Hill Road (State Road 1142).	+39	
Kill 'em Swamp	At the confluence with Long Branch	+11	Unincorporated Areas of Hertford County.
	Approximately 2.0 miles upstream of the confluence with Long Branch.	+19	
Kirby Creek	At the confluence with Meherrin River	+17	Unincorporated Areas of Hertford County.
	Approximately 150 feet upstream of the confluence of Turkey Creek.	+17	
Liverman Creek	At the confluence with Meherrin River	+8	Unincorporated Areas of Hertford County.
	Approximately 0.4 mile upstream of Spiers Road (State Road 1317).	+78	

Flooding source(s)	Location of referenced elevation	* Elevation in feet (NGVD) + Elevation in feet (NAVD) # Depth in feet above ground Modified	Communities affected
Liverman Creek Tributary 1	At the confluence with Liverman Creek	+12	Unincorporated Areas of Hertford County.
	Approximately 1.3 miles upstream of Parkers Ferry Road (State Road 1306).	+21	
Liverman Creek Tributary 1A	At the confluence with Liverman Creek Tributary 1	+16	Unincorporated Areas of Hertford County.
	Approximately 1.7 miles upstream of the confluence with Liverman Creek Tributary 1.	+26	
Liverman Creek Tributary 2	At the confluence with Liverman Creek	+21	Unincorporated Areas of Hertford County.
	Approximately 0.7 mile upstream of U.S. Highway 258	+28	
Long Branch	At the confluence with Chinkapin Creek	+11	Unincorporated Areas of Hertford County.
	Approximately 1,300 feet upstream of Quebec Road (State Road 1002).	+37	
Long Branch Tributary 1	At the confluence with Long Branch	+13	Unincorporated Areas of Hertford County.
	Approximately 0.5 mile upstream of the confluence with Long Branch.	+19	
Long Branch Tributary 2	At the confluence with Long Branch	+15	Unincorporated Areas of Hertford County.
	Approximately 0.5 mile upstream of Quebec Road (State Road 1002).	+29	
Long Branch Tributary 3	At the confluence with Long Branch	+20	Unincorporated Areas of Hertford County.
	Approximately 0.6 mile upstream of the confluence with Long Branch.	+27	
Long Branch Tributary 4	At the confluence with Long Branch	+24	Unincorporated Areas of Hertford County.
	Approximately 0.7 mile upstream of the confluence with Long Branch.	+44	
Meherrin River	At the confluence with the Chowan River	+8	Unincorporated Areas of Hertford County, Town of Murfreesboro.
	Approximately 50 feet upstream of the Virginia/North Carolina State boundary.	+26	
Meherrin River Tributary 1	At the confluence with Meherrin River	+12	Unincorporated Areas of Hertford County.
	Approximately 1.9 miles upstream of the confluence with Meherrin River.	+22	
Meherrin River Tributary 2	At the confluence with Meherrin River	+12	Unincorporated Areas of Hertford County.
	Approximately 0.8 mile upstream of Mapleton Road (State Road 1303).	+29	
Meherrin River Tributary 3	At the confluence with Meherrin River	+19	Unincorporated Areas of Hertford County.
	Approximately 0.8 mile upstream of Boones Bridge Road (State Road 1311).	+34	
Meherrin River Tributary 4	At the confluence with Meherrin River	+19	Unincorporated Areas of Hertford County.
	Approximately 0.9 mile upstream of Boones Bridge Road (State Road 1311).	+25	
Mill Branch	At the confluence with Potecasi Creek	+8	Unincorporated Areas of Hertford County.
	Approximately 200 feet downstream of U.S. Highway 158	+17	
Mill Branch South	At the confluence with Ahoskie Creek	+54	Unincorporated Areas of Hertford County.
	Approximately 0.8 mile upstream of the confluence with Ahoskie Creek.	+57	
Mill Branch Tributary 1	At the confluence with Mill Branch	+8	Unincorporated Areas of Hertford County.
	Approximately 0.6 mile upstream of the confluence with Mill Branch.	+19	
Old Tree Swamp	At the confluence with Potecasi Creek	+26	Unincorporated Areas of Hertford County.
	Approximately 1.8 miles upstream of Beaver Dam Road (State Road 1167).	+50	

Flooding source(s)	Location of referenced elevation	* Elevation in feet (NGVD) + Elevation in feet (NAVD) # Depth in feet above ground Modified	Communities affected
Panther Swamp	At the confluence with Potecasi Creek	+30	Unincorporated Areas of Hertford County.
	Approximately 1,170 feet upstream of Pine Tops Road	+49	
Panther Swamp Tributary 2	At the confluence with Panther Swamp	+44	Unincorporated Areas of Hertford County.
	Approximately 0.4 mile upstream of the confluence with Panther Swamp.	+49	
Potecasi Creek	At the confluence with the Meherrin River	+8	Unincorporated Areas of Hertford County.
	At the Hertford/Northampton County boundary	+36	
Potecasi Creek Tributary 1	At the confluence with Potecasi Creek	+10	Unincorporated Areas of Hertford County.
	Approximately 1.2 miles upstream of U.S. 158 Highway West.	+36	
Potecasi Creek Tributary 2	At the confluence with Potecasi Creek	+23	Unincorporated Areas of Hertford County.
	Approximately 1,800 feet upstream of Country Club Road (State Road 1108).	+28	
Potecasi Creek Tributary 3	At the confluence with Potecasi Creek	+26	Unincorporated Areas of Hertford County.
	Approximately 930 feet downstream of Boone Farm Road (State Route 1108).	+30	
Snake Branch	At the confluence with Ahoskie Creek	+29	Unincorporated Areas of Hertford County.
	Approximately 1,020 feet upstream of Jernigan Airport Road (State Road 1100).	+41	
Stony Creek	At the confluence with Ahoskie Creek	+25	Unincorporated Areas of Hertford County.
	The Hertford/Bertie County boundary	+25	
Turkey Creek	At the confluence with Kirby Creek	+17	Unincorporated Areas of Hertford County.
	Approximately 70 feet upstream of U.S. Highway 158	+50	
Turkey Creek (South)	At the confluence with Ahoskie Creek	+41	Unincorporated Areas of Hertford County.
	Approximately 930 feet upstream of NC Highway 11	+49	
Turnpike Branch	At the confluence with Wiccacon River	+10	Unincorporated Areas of Hertford County, Village of Cofield.
	Approximately 500 feet upstream of Ahoskie Cofield Road (SR 1403).	+37	
White Oak Swamp	At the confluence with Ahoskie Creek	+11	Unincorporated Areas of Hertford County, Town of Ahoskie.
	Approximately 2.1 miles upstream of Newsome Grove Road (SR 1419).	+42	
Wiccacon River	At the confluence with Chowan River	+7	Unincorporated Areas of Hertford County.
	At the confluence of Ahoskie Creek and Bear Swamp	+11	
Wiccacon River Tributary 2	At the confluence with Wiccacon River	+7	Unincorporated Areas of Hertford County.
	Approximately 0.5 mile upstream of Wiccacon Road (State Road 1443).	+14	
Wiccacon River Tributary 4	At the confluence with Wiccacon River	+8	Unincorporated Areas of Hertford County.
	Approximately 0.7 mile upstream of the confluence with Wiccacon River.	+13	
Wiccacon River Tributary 6	At the confluence with Wiccacon River	+9	Unincorporated Areas of Hertford County.
	Approximately 0.5 mile upstream of the confluence of Wiccacon River Tributary 6A.	+12	
Wiccacon River Tributary 6A	At the confluence with Wiccacon River Tributary 6	+9	Unincorporated Areas of Hertford County.
	Approximately 0.5 mile upstream of the confluence with Wiccacon River Tributary 6.	+12	

* National Geodetic Vertical Datum.
+ North American Vertical Datum.
# Depth in feet above ground.

Flooding source(s)	Location of referenced elevation	* Elevation in feet (NGVD) + Elevation in feet (NAVD) # Depth in feet above ground Modified	Communities affected

ADDRESSES

Town of Ahoskie
Maps are available for inspection at Ahoskie Town Hall, 201 West Main Street, Ahoskie, North Carolina.

Town of Murfreesboro
Maps are available for inspection at Murfreesboro Town Hall, 105 East Broad Street, Murfreesboro, North Carolina.

Town of Winton
Maps are available for inspection at Hertford County Planning Department, 704 North King Street, Winton, North Carolina.

Unincorporated Areas of Hertford County
Maps are available for inspection at Hertford County Planning Department, 704 North King Street, Winton, North Carolina.

Village of Cofield
Maps are available for inspection at Cofield Village Hall, 105 Milton Street, Cofield, North Carolina.

Tulsa County, Oklahoma, and Incorporated Areas
FEMA Docket Nos.: B–7731 and B–7744

Anderson Creek	Approximately 480 ft upstream of confluence with Fisher Creek.	+656	City of Sand Springs, Unincorporated Areas of Tulsa County.
	Approximately 2480 Feet upstream of confluence with Anderson Creek Tributary.	+746	
Anderson Creek Tributary	Confluence with Anderson Creek	+737	City of Sand Springs, Unincorporated Areas of Tulsa County.
	Approximately 1780 ft upstream of S 153rd Ave W	+787	
Anderson Creek Tributary A–1	Confluence with Anderson Creek Tributary	+773	Unincorporated Areas of Tulsa County.
	Approximately 1285 ft upstream of confluence with Anderson Creek Tributary.	+785	
Arkansas River	Approximately 7000 ft downstream of S 185th Ave E and E 161st St intersection (Wagoner County line).	+582	Unincorporated Areas of Tulsa County, City of Jenks, City of Sand Springs, City of Tulsa, Town of Bixby.
	Keystone Dam	+666	
Ator Tributary	Confluence with Bird Creek	+600	City of Owasso.
	Intersection with E 4th St	+603	
Berryhill Creek	Confluence with Arkansas River	+642	City of Sand Springs, Unincorporated Areas of Tulsa County.
	Approximately 5995 ft upstream of S 65th Ave W	+714	
Berryhill Creek Tributary	Confluence with Berryhill Creek	+666	Unincorporated Areas of Tulsa County.
	Approximately 180 ft upstream of W 41st St	+704	
Bigheart Creek	Confluence with Arkansas River	+644	Unincorporated Areas of Tulsa County.
	Approximately 2000 ft upstream of W Cameron St	+674	
Bird Creek Tributary 5A	Confluence with Bird Creek	+591	City of Owasso.
	Approximately 3300 fet upstream of N 123rd Ave E	+653	
Blackjack Creek	Confluence with Horsepen Creek	+603	City of Owasso.
	Approximately 400 ft upstream of E 116th St N	+682	
Blackjack Creek Tributary A	Confluence with Blackjack Creek	+613	City of Collinsville, Unincorporated Areas of Tulsa County.
	Intersection with 19th St.	+644	
Charley Creek	Confluence with Bird Creek	+617	Unincorporated Areas of Tulsa County.
	Approximately 1020 ft upstream of N Yale Ave	+638	
Cherokee School Creek	Confluence with Bird Creek	+606	Unincorporated Areas of Tulsa County.
	Approximately 2900 ft upstream of E 66th St N	+616	
Cherry Creek (North Tulsa)	Confluence with Horsepen Creek	+610	Unincorporated Areas of Tulsa County.
	Approximately 330 ft upstream of E 126th St N	+681	
Cherry Creek (West Tulsa)	Confluence with Arkansas River	+624	Unincorporated Areas of Tulsa County, City of Tulsa.
	Approximately 2200 ft upstream of W 21st St	+643	

Flooding source(s)	Location of referenced elevation	* Elevation in feet (NGVD) + Elevation in feet (NAVD) # Depth in feet above ground Modified	Communities affected
Cherry Creek Tributary	Confluence with Cherry Creek (North Tulsa)	+661	Unincorporated Areas of Tulsa County.
	Approximately 5800 ft upstream of E 136th St N	+687	
Coal Creek (West Tulsa)	Confluence with Polecat Creek	+624	City of Jenks, Unincorporated Areas of Tulsa County.
	Approximately 4145 feet upstream of W 151st St. intersection.	+712	
Coal Creek Tributary A	Confluence with Coal Creek	+646	City of Glenpool.
	Approximately 360 Ft downstream of S Elwood Ave.	+673	
Coal Creek Tributary B	Confluence with Coal Creek (West Tulsa)	+645	City of Glenpool, Unincorporated Areas of Tulsa County.
	Intersection with E 131st Street	+698	
Country Estates Creek	Confluence with Blackjack Creek	+643	Unincorporated Areas of Tulsa County.
	Approximately 700 ft downstream of E 121st St N	+666	
Duck Creek	Confluence with Snake Creek	+606	Unincorporated Areas of Tulsa County.
	Approximately 9100 ft upstream of U.S. 75	+684	
Duck Creek Tributary	Confluence with Duck Creek	+662	Unincorporated Areas of Tulsa County.
	Approximately 10,000 ft upstream of U.S. 75	+686	
East Blackjack Creek Tributary	Confluence with East Creek	+619	Unincorporated Areas of Tulsa County, City of Collinsville.
	Approximately 1590 ft downstream of N. 135th Ave E.	+651	
East Branch Haikey Creek	Approximately 10 feet upstream of Date Ave.	+706	City of Broken Arrow.
	Approximately 1050 feet upstream of S. Main St.	+720	
East Creek	Approximately 2780 ft downstream of E 146 St N	+600	Unincorporated Areas of Tulsa County.
	Approximately 50 ft downstream of E 126th St N	+664	
Euchee Creek Tributary 1	Confluence with Euchee Creek	+688	City of Sand Springs.
	Approximately 170 ft upstream of confluence with Euchee Creek.	+691	
Euchee Creek Tributary 2	Confluence with Euchee Creek	+689	Unincorporated Areas of Tulsa County.
	Approximately 2000 ft upstream of confluence with Euchee Creek.	+690	
Fisher Creek	Confluence with Arkansas River	+650	Unincorporated Areas of Tulsa County.
	Approximately 4100 ft upstream of W 41st St	+795	
Fisher Creek Overflow	Confluence with Arkansas River	+651	City of Sand Springs, Unincorporated Areas of Tulsa County.
	Approximately 2600 ft upstream of S 145th Ave W	+656	
Fisher Creek Tributary	Confluence with Fisher Creek	+701	Unincorporated Areas of Tulsa County.
	Approximately 1200 ft upstream of S 157th Ave W	+775	
Floral Haven Creek	Confluence with Haikey Creek	+674	City of Broken Arrow.
	Approximately 100 ft downstream of N Aspen Ave	+726	
Fox Meadow Tributary	Confluence with Blackjack Creek	+657	Unincorporated Areas of Tulsa County.
	Approximately 1400 ft upstream of E 120th St N	+676	
Franklin Creek (Formerly Arkansas River Tributary at Sand Springs).	Confluence with Arkansas River	+651	City of Sand Springs, Unincorporated Areas of Tulsa County.
	Approximately 5,770 ft upstream of intersection with W 12th St.	+750	
Fred Creek	Confluence with Arkansas River	+615	City of Tulsa
	617 ft upstream of E 71st St.	+705	
Fry Ditch No. 1 Tributary	Confluence with Fry Ditch No. 1	+606	Town of Bixby.
	Approximately 620 ft upstream of E 119th St	+616	
Fry Ditch No. 2	Confluence with Arkansas River	+605	Town of Bixby.
	Approximately 522 ft upstream of E 86th St.	+727	
Fry Ditch No. 2 Tributary	Confluence with Fry Ditch No. 2	+622	Town of Bixby.
	Approximately 60 ft downstream of E Greens Ave.	+632	
Hager Creek	Confluence with Polecat Creek	+623	City of Jenks.

Flooding source(s)	Location of referenced elevation	* Elevation in feet (NGVD) + Elevation in feet (NAVD) # Depth in feet above ground Modified	Communities affected
	Approximately 85 feet downstream of S Elwood intersection.	+629	
Haikey Creek	Intersection with W. Houston St	+661	City of Broken Arrow.
	Approximately 270 ft downstream of E. State Highway 51	+727	
Harlow Creek Overflow	Approximately 240 ft upstream of S 41st Ave W	+640	Unincorporated Areas of Tulsa County, City of Tulsa.
	Approximately 1970 ft upstream of S 57th Ave W	+644	
Horsepen Creek	Approximately 3970 feet downstream of 137th st. (county line).	+601	City of Collinsville.
	Approximately 2400 feet upstream of N Sheridan Rd	+661	
Horsepen Creek North Tributary 1.	Confluence with Horsepen Creek	+625	Unincorporated Areas of Tulsa County.
	Approximately 1600 ft upstream of N Memorial Dr.	+642	
Horsepen Creek North Tributary 2.	Confluence with Horsepen Creek	+634	Unincorporated Areas of Tulsa County.
	Approximately 7100 ft upstream of E 166th St N	+678	
Horsepen Creek North Tributary 3.	Confluence with Horsepen Creek	+637	Unincorporated Areas of Tulsa County.
	Approximately 4300 ft downstream of N Highway 75	+657	
Horsepen Creek Tributary B	Confluence with Horsepen Creek	+642	Unincorporated Areas of Tulsa County.
	Approximately 370 ft upstream of confluence with Horsepen Creek Tributary b Tributary.	+644	
Horsepen Creek Tributary B tributary.	Confluence with Horsepen Creek Tributary B	+643	Unincorporated Areas of Tulsa County.
	Approximately 2800 ft upstream of confluence witih Horsepen Creek Tributary B.	+650	
Horsepen Creek Tributary C	Confluence with Horcepen Creek	+646	City of Collinsville, Unincorporated Areas of Tulsa County.
	Approximately 750 Ft upstream of E State Highway 20	+653	
Horsepin Creek	Confluence with South Fork Horse Creek	+634	Town of Skiatook.
	Approximately 3100 ft upstream of E Cherokee St	+637	
Joe Creek	Confluence with Arkansas River	+616	City of Tulsa.
	Confluence with East and West Branches of Joe Creek	+660	
Little Haikey Creek	Confluence with Haikey Creek	+624	City of Broken Arrow.
	Approximately 30 ft. downstream of E. 76th St.	+725	
Little Sand Creek	Confluence with Arkansas River	+663	Unincorporated Areas of Tulsa County.
	Approximately 4680 ft upstream of W 8th St.	+751	
Lower Fred Creek	Confluence with Arkansas River	+614	City of Tulsa.
	Approximately 324 ft upstream of E 86th St	+618	
Middle Branch Haikey Creek	Confluence with East Branch Haikey Creek	+651	City of Broken Arrow.
	Approximately 50 ft downstream of W Kenosha St	+716	
Mooser Creek	Confluence with Arkansas River	+624	City of Tulsa.
	Approximately 314 ft downstream of W 57th St.	+713	
Neckel Creek	Confluence with Polecat Creek	+630	City of Tulsa.
	Approximately 950 ft upstream of W 91st St.	+636	
Nichols Creek	Confluence with Coal Creek (West Tulsa)	+681	City of Glenpool.
	2,180 Feet downstream from W 141st Street (County Boundary).	+755	
Olive Creek	Confluence with Haikey Creek	+655	City of Broken Arrow
	At intersection with Kenosha St.	+700	
Panther Creek	Confluence with Charley Creek	+624	Unincorporated Areas of Tulsa County.
	Approximately 2100 ft upstream of N Yale Ave	+639	
Park Grove Creek	Confluence with Middle Branch Haikey Creek	+685	City of Broken Arrow.
	Approximately 100 ft downstream of N Elm Pl	+720	
Polecat Creek	Confluence with Arkansas River	+610	City of Jenks, Unincorporated Areas of Tulsa County.
	Intersection with S 33rd Ave.	+634	
Posey Creek	Confluence with Arkansas River	+606	City of Glenpool.
	Approximately 52 feet upstream of E 151st Street	+703	
Posey Creek North Tributary 1	Confluence with Posey Creek	+630	Unincorporated Areas of Tulsa County.
	Approximately 130 ft downstream of S 7th St	+712	

Flooding source(s)	Location of referenced elevation	* Elevation in feet (NGVD) + Elevation in feet (NAVD) # Depth in feet above ground Modified	Communities affected
Posey Creek South Tributary 1	Confluence with Posey Creek	+610	Unincorporated Areas of Tulsa County, Town of Bixby.
	Approximately 2700 ft upstream of E 151st St	+668	
Posey Creek South Tributary 2	Confluence with Posey Creek	+624	Unincorporated Areas of Tulsa County, Town of Bixby.
	Approximately 540 ft upstream of S Harvard Ave	+662	
Prattville Creek	Confluence with Arkansas River	+649	City of Sand Springs.
	Approximately 930 Ft upstream of S 112th Ave W	+739	
Prattville Creek Tribuatary 1	Confluence with Prattville Creek	+667	City of Sand Springs.
	Approximately 780 ft upstream of confluence with Prattville Creek.	+671	
Prattville Creek Tributary 2	Confluence with Prattville Creek	+693	City of Tulsa.
	Approximately 260 ft downstream of S Whispering Creek Dr.	+701	
Prattville Creek Tributary 3	Confluence with Prattville Creek	+712	City of Sand Springs.
	Approximately 1350 ft downstream of S Linwood Dr	+725	
Prattville Creek Tributary 4	Confluence with Prattville Creek	+728	City of Sand Springs.
	Approximately 260 ft upstream of confluence with Prattville Creek.	+730	
Ranch Creek	Confluence with Bird Creek	+592	Unincorporated Areas of Tulsa County.
	Approximately 1070 ft upstream of E 116th St N	+659	
Ranch Creek Tributary	Confluence with Ranch Creek	+592	Unincorporated Areas of Tulsa County.
	Approximately 1100 ft upstream of N Sheridan Rd	+669	
Ranch Creek Tributary A	Confluence with Ranch Creek	+592	City of Owasso.
	Intersection with N Garnett Rd.	+674	
Ranch Creek Tributary B	Confluence with Ranch Creek	+608	City of Owasso, Unincorporated Areas of Tulsa County.
	Approximately 50 ft downstream of E 106th St	+650	
Redfork Creek	Conflucence with Arkansas River	+647	City of Sand Springs, Unincorporated Areas of Tulsa County.
	Approximately 1680 ft upstream of E 41st St	+647	
Redfork Creek Tribuatary 1	Confluence with Redfork Creek	+696	City of Sand Springs.
	Approximately 1500 ft upstream of confluence with Redfork Creek.	+722	
Redfork Creek Tributary 2	Confluence with Redfork Creek	+715	City of Sand Springs.
	Approximately 775 ft upstream of confluence with Redfork Creek.	+744	
Remington Tributary	Confluence with Blackjack Creek	+650	Unincorporated Areas of Tulsa County.
	Approximately 250 ft upstream of E 122nd St N	+653	
Rolling Meadows Creek	Confluence with Coal Creek (West Tulsa)	+691	City of Glenpool, Unincorporated Areas of Tulsa County.
	Approximately 1480 Ft. upstream of S 26th Ave. W. Intersection.	+740	
Sand Creek	Confluence with Arkansas River	+659	City of Sand Springs.
	Intersection with Archer St	+722	
Sand Springs Lake Tributary	Confluence with West Bigheart Creek	+661	City of Sand Springs.
	Approximately 1,460 ft upstream of Old North RD E	+773	
Sawgrass Tributary	Confluence with Ranch Creek Tributary B	+647	City of Owasso.
	Approximately 850 ft upstream of confluence with Ranch Creek Tribuatary B.	+654	
Shady Grove Creek	Confluence with Harlow Creek	+658	Unincorporated Areas of Tulsa County.
	Approximately 3235 ft upstream of U.S. 64	+664	
Skunk Creek	Confluence with Bird Creek	+636	Unincorporated Areas of Tulsa County.
	Approximately 1450 ft upstream of N Lewis Ave	+667	
Snake Creek	Confluence with Arkansas River	+598	Unincorporated Areas of Tulsa County.
	Approximately 10,900 ft upstream of 201st St	+613	
Snake Creek Tributary	Confluence with Snake Creek	+598	Unincorporated Areas of Tulsa County.

Flooding source(s)	Location of referenced elevation	* Elevation in feet (NGVD) + Elevation in feet (NAVD) # Depth in feet above ground Modified	Communities affected
	Approximately 1381 ft upstream of E 181st St	+603	
Three Lakes Tributary	Confluence with Bird Creek Tributary 5A	+603	City of Owasso.
	Approximately 320 Ft downstream of E 83rd St. N	+604	
Turtle Creek	Approximately 2000 Ft downstream of Aspen intersection	+666	City of Broken Arrow.
	Approximately 100 ft downstream of W Houston St	+704	
Vensel Creek	Confluence with Arkansas River	+610	City of Tulsa.
	Approximately 49 ft downstream of E 82nd St	+690	
Vensel Creek South	Confluence with Arkansas River	+610	City of Tulsa.
	Approximately 39 ft downstream of E 101st St	+616	
West Bigheart Creek	Confluence with Bigheart Creek	+650	City of Sand Springs
	Approximately 2300 ft upstream of E Old North Rd	+721	
West Branch Haikey Creek Tributary.	Confluence with West Branch Haikey Creek	+667	City of Broken Arrow.
	Approximately 580 Ft downstream of W. Elgin St.	+674	
White Church Creek	Confluence with Haikey Creek	+605	Unincorporated Areas of Tulsa County.
	Approximately 218 ft upstream of E 111th St.	+680	

* National Geodetic Vertical Datum.
+ North American Vertical Datum.
# Depth in feet above ground.

ADDRESSES

City of Broken Arrow
Maps are available for inspection at 115 E. Commercial Street, Broken Arrow, OK 74013.

City of Collinsville
Maps are available for inspection at 106 N. 12th St., Collinsville, OK 74021.

City of Glenpool
Maps are available for inspection at 14522 Broadway, Glenpool, OK 74033.

City of Jenks
Maps are available for inspection at 2111 N. Elm St., Jenks, OK 74037.

City of Owasso
Maps are available for inspection at 207 South Cedar St., Owasso, OK 74055.

City of Sand Springs
Maps are available for inspection at 216 North Lincoln, Sand Springs, OK 74063.

City of Tulsa
Maps are available for inspection at 2317 South Jackson, ste. 302, Tulsa, OK 74103.

Town of Bixby
Maps are available for inspection at 116 West Needles St., Bixby, OK 74008.

Town of Skiatook
Maps are available for inspection at 100 North Broadway, Skiatook, OK 74070.

Unincorporated Areas of Tulsa County
Maps are available for inspection at 633 W. 3rd. Ste 140, Tulsa, OK 74127.

Madison County, Tennessee, and Incorporated Areas
FEMA Docket No. B–7792

Cane Creek	At Hicks Avenue	+355	City of Jackson, Unincorporated Areas of Madison County.
	Approximately 1.5 miles upstream of Riverside Drive	+434	
Dyer Creek	Approximately 1,00 feet upstream of the confluence with Middle Fork of Forked Deer River.	+356	City of Jackson, Unincorporated Areas of Madison County.
	Just downstream of North Royal Street	+441	
Middle Fork of Forked Deer River.	Approximately 2,160 feet upstream of the confluence of Moize Creek.	+351	City of Three Way.
	Approximately 650 feet downstream of U.S. Route 45	+356	
Turkey Creek	Approximately 3,070 feet above the confluence of Middle Fork of Forked Deer River.	+356	City of Three Way.
	Approximately 3,470 feet upstream of Mason Road	+367	

* National Geodetic Vertical Datum.
+ North American Vertical Datum.
# Depth in feet above ground.

ADDRESSES

City of Jackson

Flooding source(s)	Location of referenced elevation	* Elevation in feet (NGVD) + Elevation in feet (NAVD) # Depth in feet above ground Modified	Communities affected
Maps are available for inspection at Planning Department, 111 East Main Street, Suite 201, Jackson, TN 38301.			
City of Three Way			
Maps are available for inspection at Office of the Mayor, 136 Green Road, Three Way, TN 38343.			
Unincorporated Areas of Madison County			
Maps are available for inspection at Madison County Commissioner's Office Building, 100 East Main Street, Jackson, TN 38301.			

(Catalog of Federal Domestic Assistance No. 97.022, ''Flood Insurance.'')

Dated: February 26. 2009.

Michael K. Buckley,

Acting Assistant Administrator, Mitigation Directorate, Department of Homeland Security, Federal Emergency Management Agency.

[FR Doc. E9–6706 Filed 3–24–09; 8:45 am]

BILLING CODE 9110–12–P

DEPARTMENT OF HOMELAND SECURITY

Federal Emergency Management Agency

44 CFR Part 67

[Docket ID FEMA–2008–0020]

Final Flood Elevation Determinations

AGENCY: Federal Emergency Management Agency, DHS.

ACTION: Final rule.

SUMMARY: Base (1% annual chance) Flood Elevations (BFEs) and modified BFEs are made final for the communities listed below. The BFEs and modified BFEs are the basis for the floodplain management measures that each community is required either to adopt or to show evidence of being already in effect in order to qualify or remain qualified for participation in the National Flood Insurance Program (NFIP).

DATES: The date of issuance of the Flood Insurance Rate Map (FIRM) showing BFEs and modified BFEs for each community. This date may be obtained by contacting the office where the maps are available for inspection as indicated on the table below.

ADDRESSES: The final BFEs for each community are available for inspection at the office of the Chief Executive Officer of each community. The respective addresses are listed in the table below.

FOR FURTHER INFORMATION CONTACT: William R. Blanton, Jr., Engineering Management Branch, Mitigation Directorate, Federal Emergency Management Agency, 500 C Street SW., Washington, DC 20472, (202) 646–3151.

SUPPLEMENTARY INFORMATION: The Federal Emergency Management Agency (FEMA) makes the final determinations listed below for the modified BFEs for each community listed. These modified elevations have been published in newspapers of local circulation and ninety (90) days have elapsed since that publication. The Assistant Administrator of the Mitigation Directorate has resolved any appeals resulting from this notification.

This final rule is issued in accordance with section 110 of the Flood Disaster Protection Act of 1973, 42 U.S.C. 4104, and 44 CFR part 67. FEMA has developed criteria for floodplain management in floodprone areas in accordance with 44 CFR part 60.

Interested lessees and owners of real property are encouraged to review the proof Flood Insurance Study and FIRM available at the address cited below for each community. The BFEs and modified BFEs are made final in the communities listed below. Elevations at selected locations in each community are shown.

National Environmental Policy Act. This final rule is categorically excluded from the requirements of 44 CFR part 10, Environmental Consideration. An environmental impact assessment has not been prepared.

Regulatory Flexibility Act. As flood elevation determinations are not within the scope of the Regulatory Flexibility Act, 5 U.S.C. 601–612, a regulatory flexibility analysis is not required.

Regulatory Classification. This final rule is not a significant regulatory action under the criteria of section 3(f) of Executive Order 12866 of September 30, 1993, Regulatory Planning and Review, 58 FR 51735.

Executive Order 13132, Federalism. This final rule involves no policies that have federalism implications under Executive Order 13132.

Executive Order 12988, Civil Justice Reform. This final rule meets the applicable standards of Executive Order 12988.

List of Subjects in 44 CFR Part 67

Administrative practice and procedure, Flood insurance, Reporting and recordkeeping requirements.

■ Accordingly, 44 CFR part 67 is amended as follows:

PART 67—[AMENDED]

■ 1. The authority citation for part 67 continues to read as follows:

Authority: 42 U.S.C. 4001 *et seq.*; Reorganization Plan No. 3 of 1978, 3 CFR, 1978 Comp., p. 329; E.O. 12127, 44 FR 19367, 3 CFR, 1979 Comp., p. 376.

§ 67.11 [Amended]

■ 2. The tables published under the authority of § 67.11 are amended as follows:

State	City/town/county	Source of flooding	Location	* Elevation in feet (NGVD) + Elevation in feet (NAVD) # Depth in feet above ground Modified
Town of Salisbury, Massachusetts FEMA Docket No.: B–1000				
Massachusetts	Town of Salisbury	Atlantic Ocean	Along Atlantic Avenue south of Vermont St. to Railroad Ave.	+14
			Along Atlantic Avenue approximately 500′ south of Railroad Ave.	+15

* National Geodetic Vertical Datum.
+ North American Vertical Datum.
# Depth in feet above ground.

ADDRESSES

Town of Salisbury
Maps are available for inspection at 5 Beach Road, Town of Salisbury, MA 01950.

Flooding source(s)	Location of referenced elevation	* Elevation in feet (NGVD) + Elevation in feet (NAVD) # Depth in feet above ground Modified	Communities affected
Bannock County, Idaho, and Incorporated Areas FEMA Docket No.: B–7781			
Rapid Creek	Just upstream of Interstate Highway 15	+4541	Unincorporated Areas of Bannock County, City of Inkom.
	At Private Road approximately 400 feet downstream of Hoot Owl Road.	+5060	

* National Geodetic Vertical Datum.
+ North American Vertical Datum.
# Depth in feet above ground.

ADDRESSES

City of Inkom
Maps are available for inspection at 365 North Rapid Creek Road, Inkom, ID 83245.

Unincorporated Areas of Bannock County
Maps are available for inspection at 130 North 6th Avenue, Suite C, Pocatello, ID 83201.

Casey County, Kentucky, and Incorporated Areas FEMA Docket No.: B–7781			
Green River	Approximately 4,300 feet downstream of confluence with Highway 49 Tributary.	+793	Unincorporated Areas of Casey County.
	Approximately 900 feet upstream of KY–817	+808	

* National Geodetic Vertical Datum.
+ North American Vertical Datum.
# Depth in feet above ground.

ADDRESSES

Unincorporated Areas of Casey County
Maps are available for inspection at 625 Campbellsville Street, Liberty, KY 42539.

Oxford County, Maine (All Jurisdictions) FEMA Docket No.: B–7756			
Barkers Brook	Approximately 625 feet downstream of Cushing Road	+634	Town of Bethel.
	Approximately 680 feet downstream of Gore Road	+662	
Barkers Pond	At ponding area North of approximately 500 feet East of the intersection of Pine Cove Point and Narrow Gauge Trail and East of Narrow Gauge Trail.	+497	Town of Hiram.
Crooked River	Approximately 500 feet downstream of Jesse Mill Road	+333	Town of Otisfield.
	Approximately 600 feet upstream of Harrison Road	+398	
Hancock Brook	Approximately 600 feet downstream of Scribner Mill Road	+361	Town of Hiram.

Flooding source(s)	Location of referenced elevation	* Elevation in feet (NGVD) + Elevation in feet (NAVD) # Depth in feet above ground Modified	Communities affected
	Approximately 180 feet southeast of the intersection of Pine Cove Point and Narrow Gauge Trail.	+494	
Moose Pond	At ponding area North of approximately 600 feet upstream of the intersection of Evergreen Drive and Hemlock Road, East of Pine Drive and West of Fox Run Line.	+524	Town of Otisfield.
Saturday Pond	At ponding area approximately 875 feet northwest of Peaco Hill Road, West of Great Oaks Line and East of West Shore Drive.	+533	Town of Otisfield.
Stony Brook	Approximately 100 feet downstream of Buckfield Road	+479	Town of Paris.
	Approximately 155 feet downstream of Christian Road	+577	
Twitchell Brook	Approximately 700 feet East of the intersection of Buckfield Road and Emery Avenue.	+395	Town of Paris.
	Approximately 2,750 feet upstream of Hebron Road	+487	

* National Geodetic Vertical Datum.
+ North American Vertical Datum.
# Depth in feet above ground.

ADDRESSES

Town of Bethel
Maps are available for inspection at Town Office, 19 Main Street, Bethel, ME 04217.
Town of Hiram
Maps are available for inspection at Town Office, 25 Allard Circle, Hiram, ME 04041.
Town of Otisfield
Maps are available for inspection at Town Office, 403 State Route 121, Otisfield, ME 04270.
Town of Paris
Maps are available for inspection at Town Office, 33 Market Square, South Paris, ME 04281.

Bristol County, Massachusetts (All Jurisdictions) FEMA Docket No.: B–7786

Buzzards Bay	Approximately 1,650 feet East of intersection of River Road and Redwing Lane.	+24	Town of Dartmouth, City of New Bedford, Town of Fairhaven, Town of Westport.
	Approximately 875 feet South from end of Club House Drive	+24	

* National Geodetic Vertical Datum.
+ North American Vertical Datum.
# Depth in feet above ground.

ADDRESSES

Town of Dartmouth
Maps are available for inspection at Town Hall, 400 Slocum Road, Dartmouth, MA 02747.
Town of Fairhaven
Town Hall, 40 Center Street, Fairhaven, MA 02719.
City of New Bedford
City Hall, 133 William Street, New Bedford, MA 02740.
Town of Westport
Maps are available for inspection at Town Hall, 816 Main Road, Westport, MA 02790.

Caldwell County, North Carolina and Incorporated Areas Docket Nos.: FEMA–B–7748, FEMA–B–7749, FEMA–D–7672, and FEMA–B–7794

Abingdon Creek	Approximately 940 feet upstream of Huffman Road	+1,089	Unincorporated Areas of Caldwell County.
	Approximately 325 feet upstream of M.W. Setzer Road	+1,098	
Amos Creek	At the confluence with Mulberry Creek	+1,426	Unincorporated Areas of Caldwell County.
	Approximately 1.4 miles upstream of the confluence with Mulberry Creek.	+1,554	
Angley Creek	Approximately 300 feet upstream of the confluence with Gunpowder Creek.	+1,178	City of Lenoir, Unincorporated Areas of Caldwell County, Town of Hudson.
	Approximately 600 feet upstream of Southeast Starcross Road.	+1,252	

Flooding source(s)	Location of referenced elevation	* Elevation in feet (NGVD) + Elevation in feet (NAVD) # Depth in feet above ground	Communities affected
		Modified	
Angley Creek Tributary 1	At the confluence with Angley Creek	+1,200	Unincorporated Areas of Caldwell County, City of Lenoir.
	Approximately 1,900 feet upstream of Southeast Starcross Road.	+1,294	
Anthony Creek	At the confluence with Prong Creek	+1,423	Unincorporated Areas of Caldwell County.
	Approximately 1.4 miles upstream of the confluence with Prong Creek.	+1,753	
Beaver Creek	Approximately 400 feet downstream of the Caldwell/Wilkes County boundary.	+1,184	Unincorporated Areas of Caldwell County.
	Approximately 1.6 miles upstream of Wilkesboro Boulevard	+1,252	
Billy Branch	At the confluence with Gunpowder Creek	+1,037	Unincorporated Areas of Caldwell County, Town of Granite Falls.
	Approximately 0.6 mile upstream of North Highland Avenue	+1,161	
Blairs Fork Creek	At the confluence with Lower Creek	+1,073	City of Lenoir, Unincorporated Areas of Caldwell County.
	Approximately 750 feet upstream of Parson's Park Drive	+1,206	
Blue Creek	At the confluence with Kings Creek 1 and Little Kings Creek	+1,102	Unincorporated Areas of Caldwell County.
	Approximately 0.5 mile upstream of Bluegrass Place (State Road 1578).	+1,276	
Boone Fork	At the confluence with Mulberry Creek	+1,219	Unincorporated Areas of Caldwell County.
	Approximately 1.2 miles upstream of the confluence with Mulberry Creek.	+1,315	
Bristol Creek	Approximately 450 feet downstream of the Burke/Caldwell County boundary.	+1,135	Unincorporated Areas of Caldwell County.
	Approximately 100 feet downstream of the Burke/Caldwell County boundary.	+1,144	
Buffalo Creek	Approximately 1,500 feet upstream of the confluence with Yadkin River.	+1,160	Unincorporated Areas of Caldwell County.
	At the Caldwell/Watauga County boundary	+2,080	
Camp Creek	At the confluence with Wilson Creek	+1,449	Unincorporated Areas of Caldwell County.
	At the confluence of Harper Creek	+1,555	
Catawba River	At the Alexander/Caldwell County boundary	+936	Unincorporated Areas of Caldwell County, Town of Granite Falls, Town of Sawmills.
	Approximately 2,000 feet upstream of Burke/Caldwell County boundary.	+1,005	
Celia Creek	At the confluence with Husband Creek	+1,042	Unincorporated Areas of Caldwell County.
	Approximately 1.0 mile upstream of Celia Creek Road (State Road 1327).	+1,168	
Cold Water Creek	At the confluence with Johns River	+1,244	Unincorporated Areas of Caldwell County.
	Approximately 1.7 miles upstream of the confluence with Johns River.	+1,849	
Craig Creek	At the confluence with Wilson Creek	+1,394	Unincorporated Areas of Caldwell County.
	Approximately 1.9 miles upstream of the confluence with Wilson Creek.	+1,770	
Dennis Creek	At the confluence with Yadkin River	+1,883	Unincorporated Areas of Caldwell County.
	Approximately 120 feet downstream of Richland Road (State Road 1372).	+2,013	
Elk Branch	At the confluence with Jones Creek	+1,385	Unincorporated Areas of Caldwell County.
	Approximately 1,290 feet upstream of Old Sampson Road (State Road 1574).	+1,450	
Estes Mill Creek	At the confluence with Wilson Creek	+1,498	Unincorporated Areas of Caldwell County.

Flooding source(s)	Location of referenced elevation	* Elevation in feet (NGVD) + Elevation in feet (NAVD) # Depth in feet above ground Modified	Communities affected
	Approximately 1.2 miles upstream of the confluence with Wilson Creek.	+1,656	
Fiddle Creek	At the confluence with Mulberry Creek	+1,397	Unincorporated Areas of Caldwell County.
	Approximately 1,600 feet upstream of the confluence with Mulberry Creek.	+1,437	
Franklin Branch	At the confluence with Johns River	+1,108	Unincorporated Areas of Caldwell County.
	Approximately 1,500 feet upstream of the confluence of Franklin Branch Tributary 1.	+1,222	
Franklin Branch Tributary 1	At the confluence with Franklin Branch	+1,199	Unincorporated Areas of Caldwell County.
	Approximately 1,540 feet upstream of the confluence with Franklin Branch.	+1,229	
Freemason Creek	Approximately 1.0 mile upstream of the confluence with Catawba River.	+1,004	Unincorporated Areas of Caldwell County, Town of Sawmills.
	Approximately 250 feet upstream of Stamey Road	+1,132	
Freemason Creek Tributary 1	At the confluence with Freemason Creek	+1,013	Unincorporated Areas of Caldwell County, Town of Sawmills.
	Approximately 1.5 miles upstream of the confluence with Freemason Creek.	+1,102	
Freemason Creek Tributary 1A	At the confluence with Freemason Creek Tributary 1	+1,023	Unincorporated Areas of Caldwell County, Town of Sawmills.
	Approximately 1,700 feet upstream of Hickory Nut Ridge Road.	+1,058	
Freemason Creek Tributary 2	At the confluence with Freemason Creek	+1,056	Unincorporated Areas of Caldwell County, Town of Sawmills.
	Approximately 0.8 mile upstream of Horseshoe Bend Road	+1,128	
Freemason Creek Tributary 2A	At the confluence with Freemason Creek Tributary 2	+1,082	Unincorporated Areas of Caldwell County, Town of Sawmills.
	Approximately 650 feet upstream of Lafayette Avenue	+1,163	
Ginger Creek	At the confluence with Middle Little River	+1,388	Unincorporated Areas of Caldwell County.
	Approximately 0.7 mile upstream of Draco Road	+1,459	
Ginger Creek Tributary 1	At the confluence with Ginger Creek	+1,401	Unincorporated Areas of Caldwell County.
	Approximately 1.3 miles upstream of Scout Road (State Road 1728).	+1,731	
Greasy Creek	At the confluence with Lower Creek	+1,062	Unincorporated Areas of Caldwell County, City of Lenoir.
	Approximately 1,500 feet upstream of the confluence with Lower Creek.	+1,066	
Green Rock Branch	At the confluence with Buffalo Creek	+1,216	Unincorporated Areas of Caldwell County.
	Approximately 1.5 miles upstream of Buffalo Cove Road (State Road 1504).	+1,436	
Gunpowder Creek	At the confluence with Catawba River	+936	City of Lenoir, Town of Hudson, Town of Granite Falls, Unincorporated Areas of Caldwell County.
	Approximately 700 feet upstream of Southeast Applegate Court.	+1,321	
Gunpowder Creek Tributary 1	At the confluence with Gunpowder Creek	+1,073	Unincorporated Areas of Caldwell County.
	Approximately 1.8 miles upstream of the confluence with Gunpowder Creek.	+1,186	
Gunpowder Creek Tributary 2	At the confluence with Gunpowder Creek	+1,089	Unincorporated Areas of Caldwell County.

Flooding source(s)	Location of referenced elevation	* Elevation in feet (NGVD) + Elevation in feet (NAVD) # Depth in feet above ground	Communities affected
		Modified	
	Approximately 50 feet downstream of Christie Road (State Road 1717).	+1,117	
Gunpowder Creek Tributary 2A ..	At the confluence with Gunpowder Creek Tributary 2	+1,090	Unincorporated Areas of Caldwell County, Town of Hudson.
	Approximately 1,600 feet upstream of Christie Road	+1,123	
Gunpowder Creek Tributary 3	At the confluence with Gunpowder Creek	+1,107	Unincorporated Areas of Caldwell County, Town of Hudson.
	Approximately 0.4 mile upstream of the confluence with Gunpowder Creek.	+1,158	
Gunpowder Creek Tributary 4	Approximately 750 feet upstream of the confluence with Gunpowder Creek.	+1,158	Town of Hudson.
	Approximately 0.6 mile upstream of the confluence with Gunpowder Creek.	+1,220	
Gunpowder Creek Tributary 5	Approximately 600 feet upstream of the confluence with Gunpowder Creek.	+1,213	City of Lenoir.
	Approximately 0.5 mile upstream of Hickory Boulevard	+1,280	
Gunpowder Creek Tributary 6	Approximately 700 feet upstream of the confluence with Gunpowder Creek.	+1,242	City of Lenoir.
	Approximately 1,750 feet upstream of the railroad	+1,298	
Harper Creek	At the confluence with Camp Creek	+1,555	Unincorporated Areas of Caldwell County.
	At the Avery/Caldwell County boundary	+1,801	
Hayes Mill Creek	Approximately 1,500 feet upstream of the confluence with Catawba River.	+1,003	Unincorporated Areas of Caldwell County, Town of Granite Falls, Town of Sawmills.
	Approximately 700 feet upstream of the confluence of Hayes Mill Creek Tributary 2.	+1,120	
Hayes Mill Creek Tributary 1	At the confluence with Hayes Mill Creek	+1,055	Unincorporated Areas of Caldwell County, Town of Sawmills.
	Approximately 1,700 feet upstream of the confluence with Hayes Mill Creek.	+1,088	
Hayes Mill Creek Tributary 2	At the confluence with Hayes Mill Creek	+1,113	Town of Sawmills.
	Approximately 1,900 feet upstream of the confluence with Hayes Mill Creek.	+1,157	
Husband Creek	Approximately 0.5 mile upstream of the confluence with Lower River.	+1,031	Unincorporated Areas of Caldwell County, Town of Gamewell.
	Approximately 1,900 feet upstream of Rocky Road (State Road 1143).	+1,202	
Husband Creek Tributary 1	At the confluence with Husband Creek	+1,066	Unincorporated Areas of Caldwell County.
	Approximately 250 feet downstream of Fleming Chapel Church Road (State Road 1322).	+1,132	
Husband Creek Tributary 2	At the confluence with Husband Creek	+1,096	Unincorporated Areas of Caldwell County.
	Approximately 750 feet upstream of Crooked Creek Way	+1,124	
Jackson Camp Creek	At the confluence with Yadkin River	+1,757	Unincorporated Areas of Caldwell County
	Approximately 1.0 mile upstream of Richland Road (State Road 1372).	+1,867	
Jesse Fork	At the confluence with Buffalo Creek	+1,349	Unincorporated Areas of Caldwell County.
	Approximately 0.8 mile upstream of Stone Mountain Road (State Road 1503).	+1,640	
Jesse Fork Tributary 1	At the confluence with Jesse Fork	+1,453	Unincorporated Areas of Caldwell County.
	Approximately 340 feet upstream of Wallace Coffey Place	+1,502	
Johns River	At the Burke/Caldwell County boundary	+1,053	Unincorporated Areas of Caldwell County.
	Approximately 3.5 miles upstream of the confluence of Thunderhole Creek.	+2,346	

Flooding source(s)	Location of referenced elevation	* Elevation in feet (NGVD) + Elevation in feet (NAVD) # Depth in feet above ground	Communities affected
		Modified	
Jones Creek	At the confluence with Buffalo Creek	+1,347	Unincorporated Areas of Caldwell County.
	Approximately 1.3 miles upstream of CC Camp Road (State Road 1574).	+2,072	
Kings Creek 1	At the confluence with Yadkin River	+1,097	Unincorporated Areas of Caldwell County.
	At the confluence of Blue Creek and Little King Creek	+1,102	
Kings Creek 2	At the confluence with Blue Creek	+1,181	Unincorporated Areas of Caldwell County.
	Approximately 1.9 miles upstream of the confluence of Kings Creek 2 Tributary 1.	+1,252	
Kings Creek 2 Tributary 1	At the confluence with Kings Creek 2	+1,201	Unincorporated Areas of Caldwell County.
	Approximately 1.2 miles upstream of Taylor Farm Road (State Road 1702).	+1,376	
Laurel Creek	At the confluence with Wilson Creek	+1,627	Unincorporated Areas of Caldwell County.
	Approximately 1.1 miles upstream of the confluence with Wilson Creek.	+1,986	
Laytown Creek	At the confluence with Yadkin River	+1,110	Unincorporated Areas of Caldwell County.
	Approximately 1.8 miles upstream of Laytown Road (State Road 1507).	+1,633	
Little Creek	At the confluence with Upper Little River	+1,177	Unincorporated Areas of Caldwell County.
	Approximately 1.4 miles upstream of Cove Mountain Lane	+1,321	
Little Gunpowder Creek (near City of Lenoir).	Approximately 700 feet upstream of Southwest Walt Arney Road.	+1,218	Town of Cajahs Mountain.
	Approximately 1,100 feet upstream of Connelly Springs Road	+1,268	
Little Gunpowder Creek (near Town of Hudson).	At confluence with Gunpowder Creek	+1,046	Unincorporated Areas of Caldwell County, Town of Cajahs Mountain, Town of Granite Falls, Town of Hudson, Town of Sawmills.
	Approximately 1.4 miles upstream of Little Gunpowder Creek Drive.	+1,261	
Little Gunpowder Creek Tributary 1 (near Town of Hudson).	At the confluence with Little Gunpowder Creek (near Town of Hudson).	+1,183	Unincorporated Areas of Caldwell County, Town of Hudson
	Approximately 50 feet upstream of Madison MHP Drive	+1,249	
Little Gunpowder Creek Tributary 2 (near Town of Hudson).	At the confluence with Little Gunpowder Creek (near Town of Hudson).	+1,194	Unincorporated Areas of Caldwell County, Town of Hudson.
	Approximately 0.5 mile upstream of Chickadee Trail Place	+1,261	
Little Kings Creek	At the confluence with Blue Creek and Kings Creek 1	+1,102	Unincorporated Areas of Caldwell County.
	Approximately 1,630 feet upstream of Zacks Fork Road (State Road 1511).	+1,334	
Little Mulberry Creek 1	Approximately 1,100 feet upstream of the confluence with Mulberry Creek.	+1,131	Unincorporated Areas of Caldwell County.
	Approximately 350 feet downstream of NC 90	+1,225	
Little Mulberry Creek 2	At the confluence with Mulberry Creek	+1,148	Unincorporated Areas of Caldwell County.
	Approximately 0.4 mile upstream of Shallow Creek Road (State Road 1350).	+1,234	
Lost Cove Creek	At the confluence with Wilson Creek	+1,563	Unincorporated Areas of Caldwell County.
	At Avery/Caldwell County boundary	+1,580	
Lower Creek	At the Burke/Caldwell County boundary	+1,026	Unincorporated Areas of Caldwell County, City of Lenoir, Town of Gamewell.
	Approximately 1,900 feet upstream of Cedar Rock Circle (State Road 1706).	+1,131	

Flooding source(s)	Location of referenced elevation	* Elevation in feet (NGVD) + Elevation in feet (NAVD) # Depth in feet above ground	Communities affected
		Modified	
Lower Creek Tributary 1	At the confluence with Lower Creek	+1,099	Unincorporated Areas of Caldwell County, City of Lenoir.
	Approximately 0.7 mile upstream of Southeast Haigler Road	+1,536	
McRory Creek	At the confluence with Upper Little River	+1,211	Unincorporated Areas of Caldwell County.
	Approximately 0.6 mile upstream of McRary Creek Road (State Road 1721).	+1,285	
Middle Little River	At the Alexander/Caldwell County boundary	+1,098	Unincorporated Areas of Caldwell County.
	Approximately 0.5 mile upstream of Brush Mountain Road (State Road 1733).	+1,419	
Middle Little River Tributary 3	At the confluence with Middle Little River	+1,222	Unincorporated Areas of Caldwell County.
	Approximately 1,500 feet upstream of U.S. 64/Taylorsville Road.	+1,257	
Middle Little River Tributary 4	At the confluence with Middle Little River	+1,314	Unincorporated Areas of Caldwell County.
	Approximately 1,000 feet upstream of Duck Creek Road (State Road 1730).	+1,360	
Middle Little River Tributary 5	At the confluence with Middle Little River	+1,316	Unincorporated Areas of Caldwell County.
	Approximately 0.5 mile upstream of the confluence with Middle Little River.	+1,362	
Mill Creek	At the confluence with Upper Little River	+936	Unincorporated Areas of Caldwell County.
	Approximately 1.0 mile upstream of Petra Mill Road (State Road 1740).	+1,053	
Mill Creek (into Yadkin River)	At the confluence with Yadkin River	+1,154	Unincorporated Areas of Caldwell County.
	Approximately 1.2 miles upstream of NC 268 Highway	+1,216	
Morris Creek	At the confluence with Upper Little River	+1,132	Unincorporated Areas of Caldwell County.
	Approximately 600 feet upstream of Sheriffs Road (State Road 1730).	+1,287	
Mountain Run	At the confluence with Upper Little River	+1,185	Unincorporated Areas of Caldwell County.
	Approximately 150 feet upstream of Fox Road	+1,321	
Mulberry Creek	Approximately 500 feet upstream of the confluence of Little Mulberry Creek 1.	+1,131	Unincorporated Areas of Caldwell County.
	Approximately 0.7 mile upstream of the confluence of Amos Creek.	+1,514	
Old Field Branch	At the confluence with Buffalo Creek	+1,379	Unincorporated Areas of Caldwell County.
	Approximately 1.7 miles upstream of Cottrell Place	+1,548	
Ooten Creek	At the confluence with Yadkin River	+1,940	Unincorporated Areas of Caldwell County.
	Approximately 0.6 mile upstream of the confluence with Yadkin River.	+2,122	
Pilot Branch	At the confluence with Upper Little River	+1,145	Unincorporated Areas of Caldwell County.
	Approximately 400 feet upstream of Burns Road (State Road 1749).	+1,206	
Preston Creek	At the confluence with Yadkin River	+1,332	Unincorporated Areas of Caldwell County.
	Approximately 650 feet upstream of Kirby Mountain Road (State Road 1370).	+1,548	
Prong Creek	At the confluence with Johns River	+1,332	Unincorporated Areas of Caldwell County.
	At the confluence of Racket Creek	+1,418	
Racket Creek	At the confluence with Prong Creek	+1,418	Unincorporated Areas of Caldwell County.
	Approximately 4.3 miles upstream of the confluence with Prong Creek.	+2,284	

Flooding source(s)	Location of referenced elevation	* Elevation in feet (NGVD) + Elevation in feet (NAVD) # Depth in feet above ground	Communities affected
		Modified	
Raider Camp Creek	At the confluence with Harper Creek and Camp Creek	+1,555	Unincorporated Areas of Caldwell County.
	Approximately 1,800 feet upstream of the confluence with Harper Creek.	+1,638	
Rock Creek	At the confluence with Upper Little River	+1,018	Unincorporated Areas of Caldwell County.
	Approximately 1,400 feet upstream of State Road 1002	+1,146	
Rockhouse Creek	At the confluence with Buffalo Creek	+1,670	Unincorporated Areas of Caldwell County.
	Approximately 1.3 miles upstream of the confluence with Buffalo Creek.	+1,900	
Rush Branch	At the confluence with Mulberry Creek	+1,344	Unincorporated Areas of Caldwell County.
	Approximately 0.9 mile upstream of the confluence with Mulberry Creek.	+1,406	
Silver Creek	At the confluence with Gunpowder Creek	+936	Unincorporated Areas of Caldwell County, Town of Granite Falls.
	Approximately 0.6 mile upstream of Falls Avenue	+1,078	
Spainhour Creek	At the confluence with Blairs Fork Creek	+1,121	City of Lenoir.
	Approximately 1,800 feet upstream of Blowing Rock Boulevard.	+1,176	
Stratford Creek	At the confluence with Catawba River	+1,005	Unincorporated Areas of Caldwell County.
	Approximately 0.7 mile upstream of Baton School Road (State Road 1139).	+1,110	
Stratford Creek Tributary 1	At the confluence with Stratford Creek	+1,023	Unincorporated Areas of Caldwell County.
	Approximately 1,800 feet upstream of Baton School Road (State Road 1139).	+1,055	
Thorps Creek	At the confluence with Wilson Creek	+1,498	Unincorporated Areas of Caldwell County.
	Approximately 2,050 feet upstream of the confluence with Wilson Creek.	+1,540	
Thunderhole Creek	At the confluence with Johns River	+1,430	Unincorporated Areas of Caldwell County.
	Approximately 0.4 mile upstream of the confluence of New Years Creek.	+1,930	
Upper Little River	At the confluence with Catawba River	+936	Unincorporated Areas of Caldwell County.
	Approximately 0.7 mile upstream of Teaberry Lane	+1,294	
Upper Little River Tributary 1	At the confluence with Upper Little River	+985	Unincorporated Areas of Caldwell County.
	Approximately 0.5 mile upstream of Charlie Little Road (State Road 1741).	+1,127	
Walnut Bottom Creek	At the confluence with Johns River	+1,316	Unincorporated Areas of Caldwell County.
	Approximately 0.6 mile upstream of the confluence with Johns River.	+1,371	
Warrior Creek	Approximately 300 feet upstream of the confluence with Yadkin River.	+1,214	Unincorporated Areas of Caldwell County.
	Approximately 210 feet upstream of Warrior Road (State Road 1346).	+1,251	
Wilson Creek	Approximately 1.1 miles upstream of Adako Road (State Road 1337).	+1,106	Unincorporated Areas of Caldwell County.
	Approximately 1,000 feet upstream of Avery/Caldwell County boundary.	+1,681	
Yadkin River	At the Caldwell/Wilkes County boundary	+1,090	Unincorporated Areas of Caldwell County.
	Approximately 2.2 miles upstream of the confluence of Ooten Creek.	+2,315	
Yadkin River Tributary 25	At the confluence with Yadkin River	+1,128	Unincorporated Areas of Caldwell County.
	Approximately 1,730 feet downstream of Laytown Road (State Road 1507).	+1,284	

Flooding source(s)	Location of referenced elevation	* Elevation in feet (NGVD) + Elevation in feet (NAVD) # Depth in feet above ground	Communities affected
		Modified	
Zacks Fork Branch	At the confluence with Zacks Fork Creek	+1,104	City of Lenoir.
	Approximately 1,350 feet upstream of the confluence with Zacks Fork Creek.	+1,105	
Zacks Fork Creek	At the confluence with Lower Creek	+1,088	City of Lenoir, Unincorporated Areas of Caldwell County.
	Approximately 800 feet downstream of Northeast Georgetown Road.	+1,139	
Zacks Fork Creek Tributary 1	Approximately 400 feet upstream of the confluence with Zacks Fork Creek.	+1,156	Unincorporated Areas of Caldwell County, City of Lenoir.
	Approximately 1.2 miles upstream of the confluence with Zacks Fork Creek.	+1,268	

* National Geodetic Vertical Datum.
+ North American Vertical Datum.
# Depth in feet above ground.

City of Lenoir

Maps are available for inspection at Lenoir City Hall, 801 West Avenue Northwest, 3rd Floor, Lenoir, North Carolina.

Town of Cajahs Mountain

Maps are available for inspection at Cajahs Mountain Town Hall, 1800 Connelly Springs Road, Lenoir, North Carolina.

Town of Gamewell

Maps are available for inspection at the Gamewell Town Hall, 2750 Old Morganton Road, Lenoir, North Carolina.

Town of Granite Falls

Maps are available for inspection at Granite Falls Town Hall, 30 Park Square, Granite Falls, North Carolina.

Town of Hudson

Maps are available for inspection at Hudson Town Hall, 550 Central Street, Hudson, North Carolina.

Town of Sawmills

Maps are available for inspection at Sawmills Town Hall, 4076 U.S. Highway 321A, Sawmills, North Carolina.

Unincorporated Areas of Caldwell County

Maps are available for inspection at Caldwell County Courthouse, 1051 Harper Avenue, Lenoir, North Carolina.

Knox County, Ohio, and Incorporated Areas FEMA Docket No.: B–7790

Center Run	At East Gambier Rd	+979	Unincorporated Areas of Knox County.
	Approximately 700 feet downstream of E Vine St	+981	
Kokosing River	.55 miles upstream of Big Run Road	+944	Village of Gambier.
	Approximately 360 feet upstream of Laymon Rd	+953	

* National Geodetic Vertical Datum.
+ North American Vertical Datum.
# Depth in feet above ground.

ADDRESSES

Unincorporated Areas of Knox County

Maps are available for inspection at 117 East High Street, Mount Vernon, OH 43050.

Village of Gambier

Maps are available for inspection at 115 Meadow Lane, Gambier, OH 43022.

(Catalog of Federal Domestic Assistance No. 97.022, ''Flood Insurance.'')

Dated: January 22, 2009.

Michael K. Buckley,

Acting Assistant Administrator, Mitigation Directorate, Department of Homeland Security, Federal Emergency Management Agency.

[FR Doc. E9–6664 Filed 3–24–09; 8:45 am]

BILLING CODE 9110–12–P

GENERAL SERVICES ADMINISTRATION

48 CFR Parts 509 and 552

[GSAR Amendment 2009–01; GSAR Case 2006–G512 (Change 27); Docket 2008–0007; Sequence 9]

RIN 3090–AI57

General Services Acquisition Regulation; GSAR Case 2006–G512; Rewrite of GSAR Part 509, Contractor Qualifications

AGENCY: Office of the Chief Acquisition Officer, General Services Administration (GSA).

ACTION: Final rule.

SUMMARY: The General Services Administration (GSA) is amending the General Services Administration Acquisition Manual (GSAM) to update the text addressing contractor qualifications. This rule is a result of the General Services Administration Acquisition Manual (GSAM) rewrite initiative undertaken by GSA to revise the GSAM to maintain consistency with the Federal Acquisition Regulation (FAR), and to implement streamlined and innovative acquisition procedures that contractors, offerors, and GSA contracting personnel can use when entering into and administering contractual relationships. The GSAM incorporates the General Services Administration Acquisition Regulation (GSAR) as well as internal agency acquisition policy.

DATES: Effective Date: April 24, 2009.

FOR FURTHER INFORMATION CONTACT: For clarification of content, contact Meredith Murphy, Procurement Analyst, at (202) 208–6925. For information pertaining to status or publication schedules, contact the Regulatory Secretariat (VPR), Room 4041, GS Building, Washington, DC, 20405, (202) 501–4755. Please cite Amendment 2009–01, GSAR case 2006–G512 (Change 27).

SUPPLEMENTARY INFORMATION:

A. Background

The GSAR Rewrite Project and Process

On February 15, 2006, GSA published an Advance Notice of Proposed Rulemaking (ANPR) with request for comments on all parts of the GSAM. As a result, two comments were received on Part 509. These are addressed below. In addition, internal review comments have been incorporated as appropriate. A proposed rule for the regulatory portion of the GSAM was published in the **Federal Register** at 73 FR 36013, June 25, 2008. In addition, GSA Acquisition Letter V–08–06, entitled ''Changes to Procedures for Conducting Fact-Finding in a Debarment/Suspension Case Under GSAM Subpart 509.4,'' dated June 20, 2008, was incorporated into Subpart 509.4 (see below). The public comment period for GSAR Part 509 closed on August 25, 2008, and six comments were received from five commenters.

The Rewrite of Part 509

This final rule contains the revisions made to Part 509, Contractor Qualifications. GSA Form 353, Performance Evaluation and Facilities Report, is deleted so that similar FAR forms will be used instead. Subpart 509.2, subsection 509.405–1(b), and clauses 552.209–70 through 552.209–73 are deleted because they are deemed unnecessary. The explanation of ''auditor'' in 509.105–1 is removed because it is partly duplicative (credit and finance) and too restrictive (does not allow use of DCAA). Subsection 509.406–3(b)(7) is deleted as duplicative of 509.406–3(b)(5). The debarment legal authorities in 509.401 are updated. The term ''Suspension and Debarment Official'' is used consistently throughout the Part. Subparagraph 509.406–3(d) was rewritten to incorporate the procedures for conducting fact finding in a debarment or suspension case from GSA Acquisition Letter V–08–06, dated June 20, 2008.

Discussion of Comments

A proposed rule was published in the **Federal Register** at 73 FR 36013, June 25, 2008. The comment period closed August 25, 2008, and six comments were received from five commenters. Also, GSA Acquisition Letter V–08–06, published on June 20, 2008, was incorporated in the final rule.

1. No new guidelines on teaming.

Comment: Four commenters wrote in support of the revisions to GSAR Part 509 and to advocate not creating new guidelines that would make it more difficult for small businesses to work as teams.

Response: Concur. There are no plans to create new guidelines for teaming.

2. Revise rules for GSA Form 527 so as not to make it a last resort for contracting officers.

Comment: The GSA Form 527, Contractor Qualifications and Financial Information, was retained, but associated text was modified to authorize its use ''only after exhausting other available sources of information.'' While acknowledging that the GSA Form 527 is lengthy, the commenter does not think that making the preaward process longer by having contracting officers research all other sources of information *prior* to seeking needed information from the contractor is helpful to either party. The commenter said he would not be entirely comfortable making a responsibility determination based only on information external to the offeror, without providing the offeror an opportunity to tell its own story about qualifications and abilities.

Response: Nonconcur. FAR 9.105 includes the standards and procedures for requesting and obtaining information sufficient to determine the responsibility of a prospective contractor, *i.e.*, that an offeror meets the standards at FAR 9.104. A careful reading of FAR 9.105–1 nets a long list of potential sources for objective information, none of which are the offeror itself. While there is nothing wrong with obtaining information directly from an offeror, the offeror itself should not be the first, or the only, source of information for making a responsibility determination. GSA acquisition personnel should make greater use of the information sources listed in the FAR, and appropriate use of such sources would not extend the length of time needed to make a responsibility determination.

3. Consider eliminating GSA Form 527.

Comment: A commenter proposed to eliminate GSA Form 527, as long as GSA Finance will continue to perform financial reviews without it. Rather than using a lengthy form, the commenter said, perhaps a brief GSAR solicitation provision could be written detailing the type of information an offeror may be requested to provide to support a responsibility determination.

Response: Nonconcur. While this is a good concept, made in the spirit of eliminating unnecessary agency-level supplementation of the FAR, the GSA Office of Finance, at this time, will not agree to perform financial reviews without it.

4. GSA Acquisition letter V–08–06, entitled ''Changes to Procedures for

Conducting Fact-Finding in a Debarment/Suspension Case Under GSAM Subpart 509.4.''

Comment: In accordance with the GSAM rewrite drafting principles, a GSA acquisition letter published after the Part 509 proposed rule was sent for publication, was incorporated into the final GSAM Part 509.

Response: The revisions made by the Acquisition Letter, published on June 20, 2008, were included in the draft final rule. Subpart 509.4 was revised at 509.403 to incorporate the definition of ''fact-finding official,'' and the procedures for fact finding replaced the earlier version of 509.406–3, Procedures, in accordance with the authority granted at FAR 9.406–3(b).

This is not a significant regulatory action and, therefore, was not subject to review under Section 6(b) of Executive Order 12866, Regulatory Planning and Review, dated September 30, 1993. This rule is not a major rule under 5 U.S.C. 804.

B. Regulatory Flexibility Act

The General Services Administration certifies that this final rule will not have a significant economic impact on a substantial number of small entities within the meaning of the Regulatory Flexibility Act, 5 U.S.C. 601, *et seq.*, because the only changes are minor ones, *i.e.*, deleting a GSA-unique form and four GSA-unique clauses in favor of using the FAR forms and clauses.

C. Paperwork Reduction Act

The Paperwork Reduction Act does apply; however, these changes to the GSAR do not impose additional information collection requirements to the paperwork burden previously approved under OMB Control Number 3090–0007.

List of Subjects in 48 CFR Parts 509 and 552

Government procurement.

Dated: December 15, 2008.

David A. Drabkin,

Senior Procurement Executive, Office of the Chief Acquisition Officer, General Services Administration.

■ Therefore, GSA amends 48 CFR parts 509 and 552 as set forth below:

■ 1. The authority citation for 48 CFR part 509 is revised to read as follows:

Authority: 40 U.S.C. 121(c).

PART 509—CONTRACTOR QUALIFICATIONS

■ 2. Revise sections 509.105, 509.105–1, and 509.105–2 to read as follows:

509.105 Procedures.

509.105–1 Obtaining information.

(a) *From a prospective contractor.* FAR 9.105–1 lists a number of sources of information that a contracting officer may utilize before making a determination of responsibility. The contracting officer may request information directly from a prospective contractor using GSA Form 527, Contractor's Qualifications and Financial Information, but only after exhausting other available sources of information.

(b) *From Government personnel.* The contracting officer may solicit and consider information from any appropriate activities, *e.g.*, legal counsel, quality control, contract management, credit and finance, and auditors before determining that an offeror is responsible.

509.105–2 Determinations and documentation.

(a) The contracting officer shall provide written notification to a prospective contractor determined not responsible. Include the basis for the determination. Notification provides the prospective contractor with the opportunity to correct any problem for future solicitations.

(b) Due to the potential for de facto debarment, the contracting officer shall avoid making repeated determinations of nonresponsibility based on the same past performance information.

(c) To provide for timely consideration of the need to institute action to debar a contractor, the contracting officer shall submit a copy of each nonresponsibility determination, other than those based on capacity or financial capability, to the Suspension and Debarment Official in the Office of the Chief Acquisition Officer.

509.106 [Removed]

■ 3. Section 509.106 is removed.

Subpart 509.2 [Removed]

■ 4. Subpart 509.2 is removed.

■ 5. Revise section 509.306 to read as follows:

509.306 Solicitation requirements.

The clauses at FAR 52.209–3 and 52.209–4 do not cover all the solicitation requirements described in FAR 9.306. If a solicitation contains a testing and approval requirement, the contracting officer must address the requirements in FAR 9.306(d) and (f) through (j) in the solicitation's Section H, special contract requirements.

509.308 [Removed]

■ 6. Section 509.308 is removed.

■ 7. Revise section 509.401 to read as follows:

509.401 Applicability.

This subpart applies to all the following:

(a) Acquisitions of personal property, nonpersonal services, construction, and space in buildings.

(b) Acquisition of transportation services (Federal Management Regulation (FMR) Parts 102–117 and 102–118 (41 CFR parts 102–117 and 102–118)).

(c) Contracts for disposal of personal property (FMR Parts 102–36 through 102–38 (41 CFR parts 102–36 through 102–38)).

(d) Covered transactions as defined by 41 CFR part 105–68.

■ 8. Amend section 509.403 by adding, in alphabetical order, the definitions ''Debarring official'' and ''Suspending official''; and, by revising the definition ''Fact-finding official. The added and revised text reads as follows:

509.403 Definitions.

Debarring official means the Suspension and Debarment Official within the Office of the Chief Acquisition Officer.

Fact-finding official, means the Suspension and Debarment Official or a designee.

* * * * *

Suspending official means the Suspension and Debarment Official within the Office of the Chief Acquisition Officer.

■ 9. Revise sections 509.405, 509.405–1 and 509.405–2 to read as follows:

509.405 Effect of listing.

509.405–1 Continuation of current contracts.

(a) When a contractor appears on the current EPLS, consider terminating a contract under any of the following circumstances:

(1) Any circumstances giving rise to the debarment or suspension also constitute a default in the contractor's performance of the contract.

(2) The contractor presents a significant risk to the Government in completing the contract.

(3) The conduct that provides the cause of the suspension, proposed debarment, or debarment involved a GSA contract.

(b) Before terminating a contract when a contractor appears on the current EPLS, consider the following factors:

(1) Seriousness of the cause for debarment or suspension.

(2) Extent of contract performance.

(3) Potential costs of termination and reprocurement.

(4) Need for or urgency of the requirement, contract coverage, and the impact of delay for reprocurement.

(5) Availability of other safeguards to protect the Government's interest until completion of the contract.

(6) Availability of alternate competitive sources to meet the requirement (*e.g.*, other multiple award contracts, readily available commercial items.)

(c) The responsibilities of the agency head under FAR 9.405–1 are delegated to the GSA Suspension and Debarment Official.

509.405–2 Restrictions on subcontracting.

The responsibilities of the agency head under FAR 9.405–2(a) are delegated to the GSA Suspension and Debarment Official.

■ 10. Revise section 509.406–1 to read as follows:

509.406–1 General.

The Suspension and Debarment Official is the designee under FAR 9.406–1(c).

■ 11. Amend section 509.406–3 by—

■ a. Removing from paragraphs (a) and (b), the words ''debarring official'' and adding the words ''Suspension and Debarment Official'' in its place each time it appears;

■ b. Removing from paragraph (b)(2), the word ''Number'' and adding the word ''Numbers'' in its place;

■ c. Removing paragraph (b)(7);

■ d. Revising paragraph (c); and

■ e. Removing from paragraphs (d)(1) and (d)(2) the words ''debarring official'' and adding the words ''Suspension and Debarment Official'' in its place each time it appears; and

■ f. Revising paragraph (d)(3).

■ The revised text reads as follows:

509.406–3 Procedures.

* * * * *

(c) *Review*. The Suspension and Debarment Official will review the report, and after coordinating with assigned legal counsel—

(1) Initiate debarment action;

(2) Decline debarment action;

(3) Request additional information; or

(4) Refer the matter to the OIG for further investigation and development of a case file.

(d) * * *

(3) Following a review of the record and, if needed, a presentation by the contractor in opposition to the proposed action, the Suspension and Debarment Official will determine whether there is a genuine dispute of material fact. If so, the Suspension and Debarment Official will initiate the fact-finding process. The fact-finding official will:

(i) Establish a date for a fact-finding proceeding, normally to be held within 45 days of the determination of who will function as the fact-finding official.

(ii) Grant extensions for good cause.

(iii) Provide notice of the scheduled hearing.

(iv) Provide the parties with a schedule for exchange of documents and witness lists.

(v) Develop an official transcript of the fact-finding proceeding.

(vi) Provide the Government's representative and the contractor with an opportunity to present evidence relevant to the facts at issue. The contractor may appear in person or through a representative.

(vii) Conduct hearings under rules consistent with FAR 9.406–3 pertaining to fact finding. Neither the Federal Rules of Evidence nor the Federal Rules of Civil Procedure govern fact finding. Hearsay evidence may be presented and will be given appropriate weight by the fact-finding official.

(viii) Provide for witness testimony. Witnesses may testify in person. Witnesses are subject to cross examination.

(ix) Prepare written findings of fact based on a preponderance of the evidence and submit them to both the Suspension and Debarment Official and the contractor within 20 calendar days following the conclusion of the fact-finding proceeding.

509.407–1 [Amended]

■ 12. Amend section 509.407–1 by removing the words ''suspending official'' and adding ''Suspension and Debarment Official'' in its place.

509.407–3 [Amended]

■ 13. Amend section 509.407–3 by removing the words ''suspending official'' and adding ''Suspension and Debarment Official'' in its place each time it appears.

PART 552—SOLICITATION PROVISIONS AND CONTRACT CLAUSES

■ 14. The authority citation for 48 CFR part 552 continues to read as follows:

Authority: 40 U.S.C. 121(c).

552.209–70 through 552.209–73 [Removed]

■ 15. Sections 552.209–70 through 552.209–73 are removed.

[FR Doc. E9–6574 Filed 3–24–09; 8:45 am]

BILLING CODE 6820–EP–S

DEPARTMENT OF COMMERCE

National Oceanic and Atmospheric Administration

50 CFR Part 679

[Docket No. 0810141351–9087–02]

RIN 0648–XN18

Fisheries of the Exclusive Economic Zone Off Alaska; Pacific Ocean Perch for Vessels in the Bering Sea and Aleutian Islands Trawl Limited Access Fishery in the Eastern Aleutian District of the Bering Sea and Aleutian Islands Management Area

AGENCY: National Marine Fisheries Service (NMFS), National Oceanic and Atmospheric Administration (NOAA), Commerce.

ACTION: Temporary rule; closure.

SUMMARY: NMFS is prohibiting directed fishing for Pacific ocean perch for vessels participating in the Bering Sea and Aleutian Islands (BSAI) trawl limited access fishery in the Eastern Aleutian District of the BSAI. This action is necessary to prevent exceeding the 2009 Pacific ocean perch total allowable catch (TAC) specified for vessels participating in the BSAI trawl limited access fishery in the Eastern Aleutian District of the BSAI.

DATES: Effective 1200 hrs, Alaska local time (A.l.t.), March 22, 2009, through 2400 hrs, A.l.t., December 31, 2009.

FOR FURTHER INFORMATION CONTACT: Steve Whitney, 907–586–7269.

SUPPLEMENTARY INFORMATION: NMFS manages the groundfish fishery in the BSAI exclusive economic zone according to the Fishery Management Plan for Groundfish of the Bering Sea and Aleutian Islands Management Area (FMP) prepared by the North Pacific Fishery Management Council under authority of the Magnuson–Stevens Fishery Conservation and Management Act. Regulations governing fishing by U.S. vessels in accordance with the FMP appear at subpart H of 50 CFR part 600 and 50 CFR part 679.

The 2009 Pacific ocean perch TAC allocated as a directed fishing allowance to vessels participating in the BSAI trawl limited access fishery in the Eastern Aleutian District of the BSAI is 365 metric tons as established by the 2009 and 2010 final harvest specifications for groundfish in the BSAI (74 FR 7359, February 17, 2009).

In accordance with § 679.20(d)(1)(iii), the Administrator, Alaska Region, NMFS (Regional Administrator), has determined that the 2009 Pacific ocean perch TAC allocated to vessels

participating in the BSAI trawl limited access fishery in the Eastern Aleutian District of the BSAI will soon be reached. Consequently, NMFS is prohibiting directed fishing for Pacific ocean perch for vessels participating in the BSAI trawl limited access fishery in the Eastern Aleutian District of the BSAI.

After the effective date of this closure the maximum retainable amounts at § 679.20(e) and (f) apply at any time during a trip.

Classification

This action responds to the best available information recently obtained from the fishery. The Assistant Administrator for Fisheries, NOAA, (AA), finds good cause to waive the requirement to provide prior notice and opportunity for public comment pursuant to the authority set forth at 5 U.S.C. 553(b)(B) as such requirement is impracticable and contrary to the public interest. This requirement is impracticable and contrary to the public interest as it would prevent NMFS from responding to the most recent fisheries data in a timely fashion and would delay the closure of Pacific ocean perch for vessels participating in the BSAI trawl limited access fishery in the Eastern Aleutian District of the BSAI. NMFS was unable to publish a notice providing time for public comment because the most recent, relevant data only became available as of March 19, 2009.

The AA also finds good cause to waive the 30-day delay in the effective date of this action under 5 U.S.C. 553(d)(3). This finding is based upon the reasons provided above for waiver of prior notice and opportunity for public comment.

This action is required by § 679.20 and § 679.91 and is exempt from review under Executive Order 12866.

Authority: 16 U.S.C. 1801 *et seq.*

Dated: March 20, 2009.

Alan D. Risenhoover

Director, Office of Sustainable Fisheries, National Marine Fisheries Service.

[FR Doc. E9–6588 Filed 3–20–09; 4:15 pm]

BILLING CODE 3510–22–S

DEPARTMENT OF COMMERCE

National Oceanic and Atmospheric Administration

50 CFR Part 679

[Docket No. 0810141351–9087–02]

RIN 0648–XN77

Fisheries of the Exclusive Economic Zone Off Alaska; Pacific Cod by Catcher Vessels Using Trawl Gear in the Bering Sea and Aleutian Islands Management Area

AGENCY: National Marine Fisheries Service (NMFS), National Oceanic and Atmospheric Administration (NOAA), Commerce.

ACTION: Temporary rule; closure.

SUMMARY: NMFS is prohibiting directed fishing for Pacific cod by trawl catcher vessels in the Bering Sea and Aleutian Islands management area (BSAI). This action is necessary to prevent exceeding the A season allowance of the 2009 Pacific cod allowable catch (TAC) specified for trawl catcher vessels in the BSAI.

DATES: Effective 1200 hrs, Alaska local time (A.l.t.), March 21, 2009, though 1200 hrs, A.l.t., April 1, 2009.

FOR FURTHER INFORMATION CONTACT: Obren Davis, 907–586–7228.

SUPPLEMENTARY INFORMATION: NMFS manages the groundfish fishery in the BSAI exclusive economic zone according to the Fishery Management Plan for Groundfish of the Bering Sea and Aleutian Islands Management Area (FMP) prepared by the North Pacific Fishery Management Council under authority of the Magnuson–Stevens Fishery Conservation and Management Act. Regulations governing fishing by U.S. vessels in accordance with the FMP appear at subpart H of 50 CFR part 600 and 50 CFR part 679.

The A season allowance of the 2009 Pacific cod TAC allocated to trawl catcher vessels in the BSAI is 25,782 metric tons (mt) as established by the final 2009 and 2010 harvest specifications for groundfish in the BSAI (74 FR 7359, February 17, 2009). In accordance with § 679.20(d)(1)(i), the Administrator, Alaska Region, NMFS, has determined that the A season allowance of the 2009 Pacific cod TAC allocated to trawl catcher vessels in the BSAI will soon be reached. Therefore, the Regional Administrator is establishing a directed fishing allowance of 25,632 mt, and is setting aside the remaining 150 mt as bycatch to support other anticipated groundfish fisheries. In accordance with § 679.20(d)(1)(iii), the Regional Administrator finds that this directed fishing allowance has been reached. Consequently, NMFS is prohibiting directed fishing for Pacific cod by trawl catcher vessels in the BSAI.

After the effective date of this closure the maximum retainable amounts at § 679.20(e) and (f) apply at any time during a trip.

Classification

This action responds to the best available information recently obtained from the fishery. The Assistant Administrator for Fisheries, NOAA, (AA), finds good cause to waive the requirement to provide prior notice and opportunity for public comment pursuant to the authority set forth at 5 U.S.C. 553(b)(B) as such requirement is impracticable and contrary to the public interest. This requirement is impracticable and contrary to the public interest as it would prevent NMFS from responding to the most recent fisheries data in a timely fashion and would delay the closure of Pacific cod by trawl catcher vessels in the BSAI. NMFS was unable to publish a notice providing time for public comment because the most recent, relevant data only became available as of March 19, 2009.

The AA also finds good cause to waive the 30-day delay in the effective date of this action under 5 U.S.C. 553(d)(3). This finding is based upon the reasons provided above for waiver of prior notice and opportunity for public comment.

This action is required by § 679.20 and is exempt from review under Executive Order 12866.

Authority: 16 U.S.C. 1801 *et seq.*

Dated: March 20, 2009.

Alan D. Risenhoover

Director, Office of Sustainable Fisheries, National Marine Fisheries Service.

[FR Doc. E9–6589 Filed 3–20–09; 4:15 pm]

BILLING CODE 3510–22–S

Proposed Rules

Federal Register
Vol. 74, No. 56
Wednesday, March 25, 2009

This section of the FEDERAL REGISTER contains notices to the public of the proposed issuance of rules and regulations. The purpose of these notices is to give interested persons an opportunity to participate in the rule making prior to the adoption of the final rules.

NUCLEAR REGULATORY COMMISSION

10 CFR Part 171

[NRC–2008–0664]

RIN 3150–AI54

Variable Annual Fee Structure for Power Reactors

AGENCY: Nuclear Regulatory Commission.

ACTION: Advance notice of proposed rulemaking (ANPR).

SUMMARY: The Nuclear Regulatory Commission (NRC) is considering whether to propose to amend its rule governing annual fees to establish a variable annual fee structure for power reactors based on licensed power limits. Current regulations governing annual fees require that each operating power reactor pay the same annual fee, regardless of the size of the reactor. The NRC has determined that the current single annual fee structure for power reactors should be reviewed in light of the potential for future licensing of small and medium sized nuclear reactors, some of which may not be used to generate electric power, and some of which may be used and licensed in configurations of up to twenty (20) reactors (modules). Although issuance of a license for a small or medium sized reactor which triggers imposition of fees may be several years in the future, this ANPR invites early input from interested stakeholders and the public on the issues relevant to the establishment of a variable annual fee structure for power reactors.

DATES: Submit comments by June 8, 2009. Comments received after this date will be considered if it is practical to do so, but the Commission is able to ensure consideration only for comments received on or before this date.

ADDRESSES: You may submit comments by any one of the following methods. Comments submitted in writing or in electronic form will be made available for public inspection. Because your comments will not be edited to remove any identifying or contact information, the NRC cautions you against including any information in your submission that you do not want to be publicly disclosed.

Federal e-Rulemaking Portal: Go to *http://www.regulations.gov* and search for documents filed under Docket ID NRC–2008–0664. Address questions about NRC dockets to Carol Gallagher 301–492–3668; e-mail *Carol.Gallagher@nrc.gov.*

Mail comments to: Secretary, U.S. Nuclear Regulatory Commission, Washington, DC 20555–0001, *Attn:* Rulemakings and Adjudications Staff.

E-mail comments to: Rulemaking.Comments@nrc.gov. If you do not receive a reply e-mail confirming that we have received your comments, contact us directly at 301–415–1677.

Hand deliver comments to: 11555 Rockville Pike, Rockville, Maryland 20852, between 7:30 a.m. and 4:15 p.m. Federal workdays (Telephone 301–415–1677).

Fax comments to: Secretary, U.S. Nuclear Regulatory Commission at 301–415–1101.

You can access publicly available documents related to this document using the following methods:

NRC's Public Document Room (PDR): The public may examine and have copied for a fee publicly available documents at the NRC's PDR, Public File Area O1 F21, One White Flint North, 11555 Rockville Pike, Rockville, Maryland.

NRC's Agencywide Documents Access and Management System (ADAMS): Publicly available documents created or received at the NRC are available electronically at the NRC's Electronic Reading Room at *http://www.nrc.gov/reading-rm/adams.html.* From this page, the public can gain entry into ADAMS, which provides text and image files of NRC's public documents. If you do not have access to ADAMS or if there are problems in accessing the documents located in ADAMS, contact the NRC's PDR reference staff at 1–800–397–4209, 301–415–4737, or by e-mail to *pdr.resource@nrc.gov.*

FOR FURTHER INFORMATION CONTACT: Rebecca I. Erickson, Office of the Chief Financial Officer, U.S. Nuclear Regulatory Commission, Washington, DC 20555–0001; telephone 301–415–7126; e-mail *Rebecca.Erickson@nrc.gov.*

SUPPLEMENTARY INFORMATION:

Background

The NRC is required each year, under the Omnibus Budget Reconciliation Act of 1990 (OBRA–90) (42 U.S.C. 2214), as amended, to recover through fees to NRC licensees and applicants approximately 90 percent of its budget authority after subtracting the amounts appropriated from the Nuclear Waste Fund (NWF), amounts appropriated for Waste Incidental to Reprocessing (WIR) activities, and amounts appropriated for generic homeland security activities. The 10 percent not recovered by fees in the NRC's annual appropriation covers the costs of agency activities that do not provide a direct benefit to NRC licensees, such as international assistance and Agreement State activities.

The NRC assesses two types of fees to meet the requirements of OBRA–90, as amended. First, license and inspection fees, established in 10 CFR part 170 under the authority of the Independent Offices Appropriation Act of 1952 (IOAA) (31 U.S.C. 9701), recover the NRC's costs of providing special benefits to identifiable applicants and licensees. Examples of the services provided by the NRC for which these fees are assessed are the review of applications for new licenses and the review of renewal applications, the review of amendment requests, and inspections. Second, annual fees established in 10 CFR part 171 under the authority of OBRA–90, as amended, recover generic and other regulatory costs not otherwise recovered through 10 CFR part 170 fees.

The assessment of annual fees by the NRC began in fiscal year (FY) 1987 to meet the requirements of Public Law 99–272, the Consolidated Omnibus Budget Reconciliation Act of 1985 (COBRA [1]), which required the NRC to recover 33 percent of its budget authority. In the FY 1987 fee rule, the NRC established a uniform annual fee for each licensed nuclear power reactor under the new part 171 (51 FR 33224; September 18, 1986). The NRC also considered calculating the annual fee on power reactors based on the thermal megawatt ratings of those reactors in the FY 1987 proposed fee rule (51 FR

[1] COBRA was replaced in December 1987, when Congress passed OBRA 87. The NRC is currently under the requirements of OBRA 90, as amended.

24078, 24082–3; July 1, 1986). In its consideration, the NRC analyzed the amendment, operator licensing, and inspection costs as billed to licensees for the period of June 1984 to June 1985. At that time, the NRC analysis found no necessary relationship or predictive trend between the thermal megawatt rating of a reactor and NRC regulatory costs.

In recognition of the problem that some licensees of smaller reactors may have in paying substantially increased fees due to the requirements of the new part 171, the NRC provided for fee exemptions under § 171.11 Exemption (51 FR 33230; September 18, 1986):

> The Commission may, upon application, grant an exemption, in part, from the annual fee required pursuant to this part. An exemption under this provision may be granted by the Commission taking into consideration the following factors:
> (a) Age of the reactor;
> (b) Size of the reactor;
> (c) Number of customers in rate base;
> (d) Net increase in KWh cost for each customer directly related to the annual fee assessed under this part; and
> (e) Any other relevant matter which the licensee believes justifies the reduction of the annual fee.

In an effort to provide a more equitable distribution among the licensed nuclear power reactors of the amount required to be collected, the NRC re-evaluated the uniform annual fee for power reactors. As a result, under the FY 1989 Fee Rule (53 FR 52632; December 29, 1988), each reactor was assessed fees based on those NRC activities from which it benefited as a type or within a class of reactors. The new methodology took into account the kind of reactor, its location and other considerations in relation to the generic research and other costs associated with power reactor regulation.

In FY 1995, the NRC re-examined this very detailed and labor intensive approach to determine reactor annual fees in an attempt to streamline the fee program. The NRC's analysis determined that the complex fee assessment was implemented when there were significant differences in the NRC research funding for the various types of reactors, which was no longer the case. Further, the NRC determined that establishing a single uniform annual fee for each operating power reactor would not cause an unfair burden and would simplify the fee process. As a result, the NRC amended § 171.15 to implement a uniform annual fee assessed to all licensed operating power reactors (60 FR 32218; June 20, 1995).

In the FY 2005 fee rule (70 FR 30526; May 26, 2005), the NRC amended the fee exemption under § 171.11 that was implemented in 1986 by eliminating the ''size of the reactor'' factor. Because none of the smaller reactors were still licensed to operate, the NRC had not issued waivers on the basis of size for several years. Moreover, no other class of licensee contained an exemption provision based on size. Therefore, the reference to size of the reactor as a consideration in evaluating annual fee exemption requests was no longer needed.

In FY 2008, approximately 90 percent of NRC's fee recoverable budget was allocated to the operating power reactors fee class, of which approximately 60 percent or $419.3 million was recovered through part 171 annual fees. The $419.3 million in budgeted costs was divided equally among the 104 power reactors licensed to operate, which resulted in an FY 2008 annual fee of $4,032,000 per reactor under § 171.15(b)(1). Additionally, under § 171.15(c)(1) each power reactor licensed to operate was assessed a spent fuel storage/reactor decommissioning annual fee of $135,000 in FY 2008. Thus, the total FY 2008 annual fee of $4,167,000 was assessed to each power reactor.

The 104 power reactors currently licensed to operate have licensed power limits ranging from 1500 to 3990 megawatts thermal (MWt). However, the NRC anticipates receiving applications to license small and medium sized commercial nuclear reactors with capacities ranging from 30 to 1000 MWt. The small and medium sized reactors could be any of the advanced reactor designs, including high-temperature gas-cooled reactors, sodium-cooled fast reactor, and small light-water reactors. Some of these small and medium sized reactors may not generate electric power, but instead be used to generate process heat for industrial applications such as the production of hydrogen. Current regulations governing annual fees for power reactors require the same fees from a nuclear reactor designed to produce electrical or heat energy.

Specific Proposal

The Commission is considering whether to propose to amend § 171.15 to establish a variable annual fee structure for power reactors based on the reactor's licensed power limit contained in the operating license (including a combined license).

Specific Considerations

Before it considers a proposed rule on the subject, the NRC is seeking advice and recommendations on this matter from all interested persons. The NRC invites advice and recommendations on an amendment to annual fees for power reactor licensees reflecting these and any other pertinent points from all interested persons. Comments and supporting reasons are particularly requested on the following questions:

Power Reactors Variable Fees

Q.1. Should the NRC establish a variable annual fee structure based on either the licensed thermal or electric power limits of the power reactor? What variables should be considered in establishing such a fee structure? In particular, should reactors producing process heat be treated the same as reactors producing heat for the generation of electricity? What are the considerations associated with establishing a variable annual fee structure based upon thermal, as opposed to electric power?

Q.2. If the NRC establishes a variable annual fee structure, what should the ranges be for each group or category of reactors? What criteria should be used to determine the fees for the different groups or categories of reactors (e.g., power level, reactor technology, associated NRC resources)?

Q.3. Current nuclear power plants use a configuration in which a single large reactor provides the heat to produce electric power. However, future plant concepts may include two or more small to medium sized reactors to provide the heat to power one or more turbines connected to an electric generator. Should a variable annual fee structure account for the potential configurations?

Q.4. Current nuclear power plants have one, two or three large reactors located at the same site. Current applications for new reactors could result in up to four large reactors at a single site. However, future plant concepts may have up to twenty (20) reactors (modules) operating at the same site. Should the variable annual fee structure account for this configuration? If so, what are the considerations in establishing such a fee structure?

Q.5. Currently, each licensed reactor located at the same site is treated as a separate unit for purposes of calculating and assessing the annual fee. However, external stakeholders in the past have suggested that a single comprehensive license be issued for a set of modular reactors located at a single site. The licensee would have substantial flexibility in determining whether and when to construct and operate each reactor module in such a plant. Should the variable annual fee structure account for this reactor licensing concept? If so, what are the

considerations in establishing such a fee structure?

Q.6. Are there other factors that should be considered in determining the annual fee for power reactors?

There will be another opportunity for additional public comment in connection with any proposed rule that may be developed by the Commission.

List of Subjects in 10 CFR Part 171

Annual charges, Byproduct material, Holders of certificates, Registrations, Approvals, Intergovernmental relations, Non-payment penalties, Nuclear materials, Nuclear power plants and reactors, Source material, Special nuclear material.

The authority citation for this document is: 42 U.S.C. 2201; 42 U.S.C. 5841.

Dated at Rockville, Maryland, this 11th day of March, 2009.

For the Nuclear Regulatory Commission.

J.E. Dyer,

Chief Financial Officer.

[FR Doc. E9–6554 Filed 3–24–09; 8:45 am]

BILLING CODE 7590–01–P

DEPARTMENT OF TRANSPORTATION

Federal Aviation Administration

14 CFR Part 39

[Docket No. FAA–2009–0261; Directorate Identifier 2009–CE–017–AD]

RIN 2120–AA64

Airworthiness Directives; Dornier Luftfahrt GmbH Models Dornier 228–100, Dornier 228–101, Dornier 228–200, Dornier 228–201, Dornier 228–202, and Dornier 228–212 Airplanes

AGENCY: Federal Aviation Administration (FAA), Department of Transportation (DOT).

ACTION: Notice of proposed rulemaking (NPRM).

SUMMARY: We propose to adopt a new airworthiness directive (AD) for the products listed above. This proposed AD results from mandatory continuing airworthiness information (MCAI) originated by an aviation authority of another country to identify and correct an unsafe condition on an aviation product. The MCAI describes the unsafe condition as:

Excessive wear on a guide pin of a power lever has been detected during inspections. The total loss of the pin could cause loss of the flight idle stop and lead to inadvertent activation of the beta mode in flight. The inadvertent activation of beta mode in flight can result in loss of control of the airplane.

The proposed AD would require actions that are intended to address the unsafe condition described in the MCAI.

DATES: We must receive comments on this proposed AD by April 24, 2009.

ADDRESSES: You may send comments by any of the following methods:

- *Federal eRulemaking Portal:* Go to *http://www.regulations.gov.* Follow the instructions for submitting comments.
- *Fax:* (202) 493–2251.
- *Mail:* U.S. Department of Transportation, Docket Operations, M–30, West Building Ground Floor, Room W12–140, 1200 New Jersey Avenue, SE., Washington, DC 20590.
- *Hand Delivery:* U.S. Department of Transportation, Docket Operations, M–30, West Building Ground Floor, Room W12–140, 1200 New Jersey Avenue, SE., Washington, DC 20590, between 9 a.m. and 5 p.m., Monday through Friday, except Federal holidays.

Examining the AD Docket

You may examine the AD docket on the Internet at *http://www.regulations.gov;* or in person at the Docket Management Facility between 9 a.m. and 5 p.m., Monday through Friday, except Federal holidays. The AD docket contains this proposed AD, the regulatory evaluation, any comments received, and other information. The street address for the Docket Office (telephone (800) 647–5527) is in the **ADDRESSES** section. Comments will be available in the AD docket shortly after receipt.

FOR FURTHER INFORMATION CONTACT: Greg Davison, Aerospace Engineer, FAA, Small Airplane Directorate, 901 Locust, Room 301, Kansas City, Missouri 64106; *telephone:* (816) 329–4130; *fax:* (816) 329–4090.

SUPPLEMENTARY INFORMATION:

Comments Invited

We invite you to send any written relevant data, views, or arguments about this proposed AD. Send your comments to an address listed under the **ADDRESSES** section. Include ''Docket No. FAA–2009–0261; Directorate Identifier 2009–CE–017–AD'' at the beginning of your comments. We specifically invite comments on the overall regulatory, economic, environmental, and energy aspects of this proposed AD. We will consider all comments received by the closing date and may amend this proposed AD because of those comments.

We will post all comments we receive, without change, to *http://www.regulations.gov,* including any personal information you provide. We will also post a report summarizing each substantive verbal contact we receive about this proposed AD.

Discussion

The European Aviation Safety Agency (EASA), which is the Technical Agent for the Member States of the European Community, has issued AD No.: 2009–0031, dated February 18, 2009 (referred to after this as ''the MCAI''), to correct an unsafe condition for the specified products. The MCAI states:

Excessive wear on a guide pin of a power lever has been detected during inspections. The total loss of the pin could cause loss of the flight idle stop and lead to inadvertent activation of the beta mode in flight. The inadvertent activation of beta mode in flight can result in loss of control of the airplane.

For the reasons described above, this new EASA Airworthiness Directive (AD) introduces a repetitive detailed inspection of the guide pins of the power and condition levers and requires the replacement of the pins that exceed the allowable wear-limits.

You may obtain further information by examining the MCAI in the AD docket.

Relevant Service Information

RUAG Aerospace Defence Technology has issued Dornier 228 Alert Service Bulletin ASB–228–279, dated December 19, 2008. The actions described in this service information are intended to correct the unsafe condition identified in the MCAI.

FAA's Determination and Requirements of the Proposed AD

This product has been approved by the aviation authority of another country, and is approved for operation in the United States. Pursuant to our bilateral agreement with this State of Design Authority, they have notified us of the unsafe condition described in the MCAI and service information referenced above. We are proposing this AD because we evaluated all information and determined the unsafe condition exists and is likely to exist or develop on other products of the same type design.

Differences Between This Proposed AD and the MCAI or Service Information

We have reviewed the MCAI and related service information and, in general, agree with their substance. But we might have found it necessary to use different words from those in the MCAI to ensure the AD is clear for U.S. operators and is enforceable. In making these changes, we do not intend to differ substantively from the information provided in the MCAI and related service information.

We might also have proposed different actions in this AD from those in the MCAI in order to follow FAA

policies. Any such differences are highlighted in a NOTE within the proposed AD.

Costs of Compliance

We estimate that this proposed AD will affect 17 products of U.S. registry. We also estimate that it would take about 20 work-hours per product to comply with the basic requirements of this proposed AD. The average labor rate is $80 per work-hour. Required parts would cost about $10 per product.

Based on these figures, we estimate the cost of the proposed AD on U.S. operators to be $27,370, or $1,610 per product.

Authority for This Rulemaking

Title 49 of the United States Code specifies the FAA's authority to issue rules on aviation safety. Subtitle I, section 106, describes the authority of the FAA Administrator. ''Subtitle VII: Aviation Programs,'' describes in more detail the scope of the Agency's authority.

We are issuing this rulemaking under the authority described in ''Subtitle VII, Part A, Subpart III, Section 44701: General requirements.'' Under that section, Congress charges the FAA with promoting safe flight of civil aircraft in air commerce by prescribing regulations for practices, methods, and procedures the Administrator finds necessary for safety in air commerce. This regulation is within the scope of that authority because it addresses an unsafe condition that is likely to exist or develop on products identified in this rulemaking action.

Regulatory Findings

We determined that this proposed AD would not have federalism implications under Executive Order 13132. This proposed AD would not have a substantial direct effect on the States, on the relationship between the national Government and the States, or on the distribution of power and responsibilities among the various levels of government.

For the reasons discussed above, I certify this proposed regulation:

1. Is not a ''significant regulatory action'' under Executive Order 12866;

2. Is not a ''significant rule'' under the DOT Regulatory Policies and Procedures (44 FR 11034, February 26, 1979); and

3. Will not have a significant economic impact, positive or negative, on a substantial number of small entities under the criteria of the Regulatory Flexibility Act.

We prepared a regulatory evaluation of the estimated costs to comply with this proposed AD and placed it in the AD docket.

List of Subjects in 14 CFR Part 39

Air transportation, Aircraft, Aviation safety, Incorporation by reference, Safety.

The Proposed Amendment

Accordingly, under the authority delegated to me by the Administrator, the FAA proposes to amend 14 CFR part 39 as follows:

PART 39—AIRWORTHINESS DIRECTIVES

1. The authority citation for part 39 continues to read as follows:

Authority: 49 U.S.C. 106(g), 40113, 44701.

§ 39.13 [Amended]

2. The FAA amends § 39.13 by adding the following new AD:

Dornier Luftfahrt GmbH: Docket No. FAA–2009–0261; Directorate Identifier 2009–CE–017–AD.

Comments Due Date

(a) We must receive comments by April 24, 2009.

Affected ADs

(b) None.

Applicability

(c) This AD applies to Models Dornier 228–100, Dornier 228–101, Dornier 228–200, Dornier 228–201, Dornier 228–202, and Dornier 228–212 airplanes, all serial numbers, certificated in any category.

Subject

(d) Air Transport Association of America (ATA) Code 76: Engine Controls.

Reason

(e) The mandatory continuing airworthiness information (MCAI) states:

Excessive wear on a guide pin of a power lever has been detected during inspections. The total loss of the pin could cause loss of the flight idle stop and lead to inadvertent activation of the beta mode in flight. The inadvertent activation of beta mode in flight can result in loss of control of the airplane.

For the reasons described above, this new EASA Airworthiness Directive (AD) introduces a repetitive detailed inspection of the guide pins of the power and condition levers and requires the replacement of the pins that exceed the allowable wear-limits.

Actions and Compliance

(f) Unless already done, do the following actions:

(1) *For throttle box assemblies with less than 12,000 hours time-in-service (TIS) since new as of the effective date of this AD:* inspect the guide pins of the power and condition levers following RUAG Aerospace Defence Technology Dornier 228 Alert Service Bulletin ASB–228–279, dated December 19, 2008, at the following times:

(i) Initially within 9,600 hours TIS since new or within the next 1,200 hours TIS, whichever occurs later; and

(ii) Repetitively thereafter within 1,200 hours TIS since any previous inspection in which the power and condition levers guide pins were not replaced or within 9,600 hours TIS since the previous inspection in which the power and condition levers guide pins were replaced.

Note 1: If the hours TIS of the throttle box assembly is unknown, use the hours TIS of the airplane to determine the compliance time for the inspection.

(2) *For throttle box assemblies with 12,000 hours TIS or more and less than 13,200 hours TIS since new as of the effective date of this AD:* inspect the guide pins of the power and condition levers following RUAG Aerospace Defence Technology Dornier 228 Alert Service Bulletin ASB–228–279, dated December 19, 2008, at the following times:

(i) Initially within 13,200 hours TIS since new or within the next 100 hours TIS, whichever occurs later; and

(ii) Repetitively thereafter within 1,200 hours TIS since any previous inspection in which the power and condition levers guide pins were not replaced or within 9,600 hours TIS since the previous inspection in which the power and condition levers guide pins were replaced.

(3) *For throttle box assemblies with 13,200 hours TIS or more since new as of the effective date of this AD:* inspect the guide pins of the power and condition levers following RUAG Aerospace Defence Technology Dornier 228 Alert Service Bulletin ASB–228–279, dated December 19, 2008, at the following times:

(i) Initially within the next 100 hours TIS; and

(ii) Repetitively thereafter within 1,200 hours TIS since any previous inspection in which the power and condition levers guide pins were not replaced or within 9,600 hours TIS since the previous inspection in which the power and condition levers guide pins were replaced.

(4) *For all throttle box assemblies:* before further flight after any inspection required in paragraph (f)(1), (f)(2), or (f)(3) of this AD, replace any guide pin that exceeds the acceptable wear-limits as defined in RUAG Aerospace Defence Technology Dornier 228 Alert Service Bulletin ASB–228–279, dated December 19, 2008.

FAA AD Differences

Note 2: This AD differs from the MCAI and/or service information as follows: No differences.

Other FAA AD Provisions

(g) The following provisions also apply to this AD:

(1) *Alternative Methods of Compliance (AMOCs):* The Manager, Standards Office, FAA, has the authority to approve AMOCs for this AD, if requested using the procedures found in 14 CFR 39.19. Send information to ATTN: Greg Davison, Aerospace Engineer, FAA, Small Airplane Directorate, 901 Locust, Room 301, Kansas City, Missouri 64106; telephone: (816) 329–4130; fax: (816) 329–4090. Before using any approved AMOC on

any airplane to which the AMOC applies, notify your appropriate principal inspector (PI) in the FAA Flight Standards District Office (FSDO), or lacking a PI, your local FSDO.

(2) *Airworthy Product:* For any requirement in this AD to obtain corrective actions from a manufacturer or other source, use these actions if they are FAA-approved. Corrective actions are considered FAA-approved if they are approved by the State of Design Authority (or their delegated agent). You are required to assure the product is airworthy before it is returned to service.

(3) *Reporting Requirements:* For any reporting requirement in this AD, under the provisions of the Paperwork Reduction Act (44 U.S.C. 3501 *et seq.*), the Office of Management and Budget (OMB) has approved the information collection requirements and has assigned OMB Control Number 2120–0056.

Related Information

(h) Refer to MCAI EASA AD No.: 2009–0031, dated February 18, 2009; and RUAG Aerospace Defence Technology Dornier 228 Alert Service Bulletin ASB–228–279, dated December 19, 2008, for related information.

Issued in Kansas City, Missouri, on March 19, 2009.

John R. Colomy,

Acting Manager, Small Airplane Directorate, Aircraft Certification Service.

[FR Doc. E9–6558 Filed 3–24–09; 8:45 am]

BILLING CODE 4910–13–P

DEPARTMENT OF ENERGY

Federal Energy Regulatory Commission

18 CFR Part 38

[Docket No. RM05–5–013]

Standards for Business Practices and Communication Protocols for Public Utilities

March 19, 2009.

AGENCY: Federal Energy Regulatory Commission.

ACTION: Notice of proposed rulemaking.

SUMMARY: The Federal Energy Regulatory Commission (Commission) proposes to incorporate by reference in its regulations the latest version (Version 002.1) of certain business practice standards adopted by the Wholesale Electric Quadrant of the North American Energy Standards Board (NAESB). NAESB's Version 002.1 Standards mainly modify NAESB's Version 001 Standards in response to Order Nos. 890, 890–A, and 890–B.

DATES: Comments on the proposed rule are due April 24, 2009.

ADDRESSES: You may submit comments identified by Docket No. RM05–5–013, by one of the following methods:

- *Agency Web Site: http://ferc.gov.* Follow the instructions for submitting comments via the eFiling link found in the Comment Procedures Section of the preamble.
- *Mail:* Commenters unable to file comments electronically must mail or hand deliver an original and 14 copies of their comments to the Federal Energy Regulatory Commission, Secretary of the Commission, 888 First Street, NE., Washington, DC 20426. Please refer to the Comment Procedures Section of the preamble for additional information on how to file paper comments.

FOR FURTHER INFORMATION CONTACT:

Ryan M. Irwin (technical issues), Office of Energy Market Regulation, Federal Energy Regulatory Commission, 888 First Street, NE., Washington, DC 20426, (202) 502–6454.

Valerie Roth (technical issues), Office of Energy Market Regulation, Federal Energy Regulatory Commission, 888 First Street, NE., Washington, DC 20426, (202) 502–8538.

Gary D. Cohen (legal issues), Office of the General Counsel, Federal Energy Regulatory Commission, 888 First Street, NE., Washington, DC 20426, (202) 502–8321.

SUPPLEMENTARY INFORMATION:

1. In this Notice of Proposed Rulemaking (NOPR), the Federal Energy Regulatory Commission (Commission) proposes to amend its regulations at 18 CFR 38.2 under the Federal Power Act [1] to incorporate by reference the latest version (Version 002.1) of certain business practice standards adopted by the Wholesale Electric Quadrant (WEQ) of the North American Energy Standards Board (NAESB). These revised standards update earlier versions that the Commission previously incorporated by reference into its regulations at 18 CFR 38.2 in Order Nos. 676, 676–B, 698, and 676–C,[2] as well as the Version 002.0 standards that NAESB filed with the Commission on September 2, 2008. The new and revised standards that NAESB adopted in its Version 002.0 and 002.1 standards implement requirements of Order Nos. 890, 890–A, and 890–B.[3] In addition, NAESB developed standards to support the Commission's eTariff program, modified the Commercial Timing Table (WEQ–004 Appendix D) and Transmission Loading Relief Standards (WEQ–008) to provide clarity and align NAESB's business practice standards with the reliability standards adopted by the North American Electric Reliability Corporation (NERC), revised the Manual Time Error Correction Standards (WEQ–006) to maintain consistency with revised NERC Standard BAL–004, and amended certain ancillary services definitions appearing in the Open Access Same-Time Information Systems (OASIS) Standards (WEQ–001) relating to the inclusion of demand resources as part of ancillary services.

I. Background

2. NAESB is a non-profit standards development organization established in January 2002 that serves as an industry forum for the development of business practice standards. These standards promote a seamless marketplace for wholesale and retail natural gas and electricity.[4] Since 1995, NAESB and its predecessor, the Gas Industry Standards Board, have been accredited members of the American National Standards Institute (ANSI), complying with ANSI's requirements that its standards reflect a consensus of the affected industries.[5]

3. NAESB's standards include business practices that streamline the transactional processes of the natural gas and electric industries, as well as communication protocols and related standards designed to improve the efficiency of communication within each industry. NAESB supports all four quadrants of the gas and electric industries—wholesale gas, wholesale electric, retail gas, and retail electric. All participants in the gas and electric industries are eligible to join NAESB

[1] 16 U.S.C. 791a, *et seq.*

[2] *Standards for Business Practices and Communication Protocols for Public Utilities,* Order No. 676, 71 FR 26,199 (May 4, 2006), FERC Stats. & Regs., Regulations Preambles ¶ 31,216 (Apr. 25, 2006), *reh'g denied,* Order No. 676–A, 116 FERC ¶ 61,255 (2006), Order No. 676–B, 72 FR 21,095 (Apr. 30, 2007), FERC Stats. & Regs., Regulations Preambles ¶ 31,246 (Apr. 19, 2007), Order No. 676–C, 73 FR 43,848 (July 29, 2008), FERC Stats. & Regs., Regulations Preambles ¶ 31,274 (July 21, 2008), Order No. 676–D, *granting clarification and denying reh'g,* 124 FERC ¶ 61,317 (2008); *Standards for Business Practices for Interstate Natural Gas Pipelines,* Order No. 698, 72 FR 38,757 (July 16, 2007), FERC Stats. & Regs., Regulations Preambles ¶ 31,251 (June 25, 2007), *order on clarification and reh'g,* Order No. 698–A, 121 FERC ¶ 61,264 (2007).

[3] *Preventing Undue Discrimination and Preference in Transmission Service,* Order No. 890, 72 FR 12,266 (March 15 2007), FERC Stats. & Regs., Regulations Preambles ¶ 31,241 (2007) (Order No. 890); *order on reh'g,* Order No. 890–A, 73 FR 2984 (Jan. 16, 2008), FERC Stats. & Regs., Regulations Preambles ¶ 31,261 (2007) (Order No. 890–A); *order on reh'g and clarification,* Order No. 890–B, 123 FERC ¶ 61,299 (2008).

[4] *See Standards for Business Practices and Communication Protocols for Public Utilities,* Notice of Proposed Rulemaking, 72 FR 8318 (Feb. 27, 2007), FERC Stats. & Regs., Proposed Regs. ¶ 32,612 at P 3 (Feb. 20, 2007).

[5] *Id.*

and participate in standards development.[6]

4. NAESB develops its standards under a consensus process so that the standards draw support from a wide range of industry members. NAESB's procedures are designed to ensure that all industry members can have input into the development of a standard, whether or not they are members of NAESB.[7] Furthermore, each standard the WEQ adopts is supported by a consensus of the six industry segments: transmission, generation, marketer/brokers, distribution/load serving entities, end users, and independent grid operators/planners. Under the WEQ process, for a standard to be approved, it must receive a super-majority vote of 67 percent of the members of the WEQ's Executive Committee with support from at least 40 percent of each of the six industry segments. For final approval, 67 percent of the WEQ's general membership must ratify the standards.[8]

5. In a series of Orders,[9] the Commission has incorporated certain of NAESB's standards into its regulations. These standards include standards for business practices as well as standards and protocols for electronic communication, and business practice standards related to reliability standards promulgated by NERC and approved by the Commission. In Order No. 698, the Commission also incorporated by reference into its regulations the NAESB Gas/Electric Coordination Standards (WEQ–011). These standards established communication protocols between interstate natural gas pipelines and electric power plant operators designed to enhance reliability by improving communication between the gas and electric industries relating to the scheduling of gas-fired generators.

6. On September 2, 2008, NAESB reported to the Commission that its WEQ Executive Committee had approved Version 002.0 of its business practice standards.[10] The standards were published on September 30, 2008. NAESB states that its leadership responded to Order Nos. 890, 890–A, and 890–B, by requesting that its Electronic Scheduling Subcommittee/Information Technology Subcommittee (ESS/ITS) and its Business Practice Subcommittee (BPS) coordinate efforts to address the issues raised by those orders. NAESB also states that, in formulating its work schedule, it distinguished between the findings in Order No. 890 that called for a specific completion date and other tasks that were less time sensitive and developed a work schedule to allow completion of the more time-sensitive items earlier in the process. As part of this process, NAESB states that the ESS/ITS and BPS worked in close coordination with the pertinent NERC committees to draft business practice standards on Order No. 890 issues that complement NERC's reliability standards related to these issues, so that the standards for both organizations will be consistent.[11]

7. While the majority of the revisions made in NAESB's Version 002.0 Standards were adopted in response to Order Nos. 890, 890–A, and 890–B, the Version 002.0 Standards also include: (1) The eTariff related standards developed by NAESB in coordination with Commission staff and the electric, gas, and oil industries; (2) modifications to WEQ's existing interconnection time monitor standards in the Manual Time Error Corrections Standards (WEQ–006) to ensure the NAESB standards remain consistent with NERC's BAL–004 standard; and (3) the explicit inclusion of demand resources in the definitions of certain ancillary services.

8. On February 19, 2009, NAESB notified the Commission that the WEQ Executive Committee had approved its Version 002.1 standards, which include both new standards and modifications to existing Version 002.0 standards.[12] The Version 002.1 standards include new standards related to capacity benefit margin and rollover rights, and were developed in response to Order Nos. 890, 890–A, and 676. Additional modifications included in the Version 002.1 standards include: (1) Modifications to existing standards pertaining to rollover rights; (2) modifications to the Coordinate Interchange Timing Tables contained in Appendix D of the Coordinate Interchange Standards (WEQ–004) to clarify the differences in timing requirements for the Western Electricity Coordinating Council and all other interconnections, complementary to the NERC reliability standards; and (3) modifications to the Transmission Loading Relief—Eastern Interconnection Standards (WEQ–008) to add clarity and ensure that the business practice standards are consistent with NERC reliability standard IRO–006.

9. In total, NAESB's WEQ Version 002.1 business practice standards include the following standards:

- Open Access Same-Time Information Systems (OASIS), Version 1.5 (WEQ–001);
- Open Access Same-Time Information Systems (OASIS) Standards & Communications Protocols, Version 1.5 (WEQ–002);
- Open Access Same-Time Information Systems (OASIS) Data Dictionary, Version 1.5 (WEQ–003);
- Coordinate Interchange (WEQ–004);
- Area Control Error (ACE) Equation Special Cases (WEQ–005);
- Manual Time Error Correction (WEQ–006);
- Inadvertent Interchange Payback (WEQ–007);
- Transmission Loading Relief—Eastern Interconnection (WEQ–008);
- Standards of Conduct for Electric Transmission Providers (WEQ–009);
- Contracts Related Standards (WEQ–010);
- Gas/Electric Coordination (WEQ–011);
- Public Key Infrastructure (PKI) (WEQ–012);
- Open Access Same-Time Information Systems (OASIS) Implementation Guide, Version 1.5 (WEQ–013); and
- WEQ/WGQ eTariff Related Standards (WEQ–014).

II. Discussion

10. We propose to incorporate by reference into the Commission's regulations the NAESB WEQ Version 002.1 standards, with certain exceptions.[13] The Version 002.1

[6] *Id.* P 4.

[7] *Id.* P 5.

[8] *Standards for Business Practices and Communication Protocols for Public Utilities,* Notice of Proposed Rulemaking, 70 FR 28,222 ((May 17, 2005), FERC Stats. & Regs., Proposed Regs. ¶ 32,582, P 13 (May 9, 2005).

[9] *See* n.2 *supra.*

[10] *See* NAESB supplemental report dated Nov. 14, 2008.

[11] The Commission addresses the associated reliability standards proposed by NERC in a companion Notice of Proposed Rulemaking being issued in Docket No. RM08–19–000.

[12] On March 12, 2009, NAESB submitted a report to the Commission documenting its ratification of the Version 002.1 standards.

[13] We do not propose to incorporate by reference in the Commission's regulations the following standards: Standards of Conduct for Electric Transmission Providers (WEQ–009); Contracts Related Standards (WEQ–010); and WEQ/WGQ eTariff Related Standards (WEQ–014). We do not propose to incorporate WEQ–009 into the Commission's regulations because it contains no substantive standards and merely serves as a placeholder for future standards. We do not propose to incorporate WEQ–010 because this standard contains an optional NAESB contract regarding funds transfers and the Commission does not require utilities to use such contracts. In addition, we do not propose to incorporate WEQ–014, eTariff Related Standards, because the Commission already has adopted standards and protocols for electronic tariff filing based on the NAESB standards. *See Electronic Tariff Filings,* 73 FR 57,515 (Oct. 3, 2008), FERC Stats. & Regs. ¶ 31,276 (Sept. 19, 2008). Also, we do not propose to incorporate NAESB's interpretation of its standards on Gas/Electric Coordination (WEQ–011) by reference in the regulations. While interpretations may provide useful guidance, they are not determinative and we will not require utilities to comply with interpretations. Lastly, as discussed more

standards will update the Version 001 standards currently incorporated by reference into the Commission's regulations.[14]

11. NAESB adopted the majority of the changes in the Version 002.1 standards to support Order Nos. 890, 890–A, and 890–B, in which the Commission addressed and remedied opportunities for undue discrimination under the *pro forma* open access transmission tariff (OATT). While many of the Version 002.1 standards simply revise or update existing standards, some of these standards prescribe new business practices to accommodate the reforms adopted in Order No. 890. For example, NAESB has developed business practice and technical standards to support conditional firm service. Additionally, NAESB developed standards for the posting of narratives explaining changes in available transfer capability and total transfer capability, underlying load forecast assumptions for available transfer capability calculations and actual peak load, as well as metrics relating to the provision of transmission service and the completion of planning studies. Specific additions and revisions included in the NAESB WEQ Version 002.1 standards are discussed below.

12. NAESB approved the Version 002.1 standards under its consensus procedures.[15] Adoption of consensus standards is appropriate because the consensus process helps to ensure the reasonableness of the standards by requiring that the standards draw support from a broad spectrum of all segments of the industry. Moreover, since the industry itself has to conduct business under these standards, the Commission's regulations should reflect those standards that have the widest possible support. In section12(d) of the National Technology Transfer and Advancement Act of 1995 (NTT&AA), Congress affirmatively requires federal agencies to use technical standards developed by voluntary consensus standards organizations, like NAESB, as a means to carry out policy objectives or activities determined by the agencies unless use of such standards would be inconsistent with applicable law or otherwise impractical.[16]

13. We propose that, once the Commission incorporates these standards by reference into its regulations, public utilities must implement these standards even before they have updated their tariffs to incorporate these changes. The Commission is also proposing, consistent with our regulation at 18 CFR 35.28(c)(1)(vii), to require each public utility to revise its OATT to include the Version 002.1 WEQ standards that we are proposing to incorporate by reference herein. For standards that do not require implementing tariff provisions, the Commission is proposing to permit the public utility to incorporate the WEQ standard by reference in its OATT. We are not, however, proposing to require a separate tariff filing to accomplish this change. Consistent with our prior practice, we are proposing to give public utilities the option of including these changes as part of an unrelated tariff filing.[17]

A. OASIS Standards

14. In the NAESB WEQ Version 002.1 standards, NAESB has developed new standards and revised existing standards relating to OASIS to ensure consistency with certain policies articulated by the Commission in Order Nos. 890, 890–A and 890–B. A number of standards that the Commission directed transmission providers to develop have been included by WEQ in the Version 002.1 OASIS Standards, which include: (1) Open Access Same-Time Information Systems (OASIS), Version 1.5 (WEQ–001); (2) Open Access Same-Time Information Systems (OASIS) Standards & Communication Protocols, Version 1.5 (WEQ–002); (3) Open Access Same-Time Information Systems (OASIS) Data Dictionary, Version 1.5 (WEQ–003); and (4) Open Access Same-Time Information Systems (OASIS) Implementation Guide, Version 1.5 (WEQ–013). In addition, NAESB's WEQ Version 002.1 standards include various minor revisions to the OASIS Standards.

15. In this NOPR, we propose to incorporate by reference into the Commission's regulations the Version 002.1 OASIS Standards (i.e., WEQ–001, WEQ–002, WEQ–003, and WEQ–013), with certain exceptions.[18]

16. We note that Standard 001–13.1.2, which requires the posting of Standards of Conduct-related information, contains references to various Commission regulations that were subsequently revised in Order No. 717.[19] Thus, these references are no longer accurate and the information required to be posted by this standard does not conform, in some instances, to the Commission's current requirements. We understand that NAESB is working on making a revision to this standard. Because the standard contains posting requirements that are still applicable, we propose to incorporate this standard by reference. However, we clarify that, until we adopt a revised standard, we do not propose to require public utilities to comply with any portion of the standard that requires information to be posted in a manner inconsistent with Order No. 717.

1. Conditional Firm Service

17. In the OASIS Standards, NAESB has included a number of standards that support conditional firm service as envisioned by the Commission in Order Nos. 890 and 890–A. NAESB has developed business practice standards to facilitate the implementation of conditional firm service, relying on the Commission's description of the attributes of that service in Order No. 890.[20] Specifically, NAESB developed Standards 001–21 through 001–21.5.5 on the Conditional Curtailment Option, the term that NAESB uses to describe conditional firm service. These standards address: (1) The limitations and conditions under which the Conditional Curtailment Option is offered; (2) the posting requirements for information concerning a Conditional Curtailment Option reservation and its curtailment criteria; (3) the process for performing the biennial reassessment; (4) the curtailment of a Conditional Curtailment Option reservation; and (5) the redirect, transfer, and resale of a Conditional Curtailment Option reservation.

specifically in note 18, *infra,* we do not propose to incorporate by reference certain portions of WEQ–001.

[14] In this NOPR, the Commission is proposing to incorporate by reference into the Commission's regulations Version 002.1 of NAESB's business practice standards. These standards have been updated to include all revisions to the standards since Version 001. Thus, some of the revisions included in Version 002.1 were made from the Version 002.0 standards and others were made from the Version 001 standards. Given that NAESB's Version 002.1 Standards represent the most up-to-date version of NAESB's business practice standards, we believe it is more productive for this NOPR to address this set of standards, rather than the Version 002.0 standards. Given our proposals in this NOPR, we do not see the need to propose any separate action addressing NAESB's Version 002.0 standards. Therefore, the proceeding in Docket No. RM05–5–007 is moot.

[15] *See* P 4 *supra.*

[16] Pub L. No. 104–113, 12(d), 110 Stat. 775 (1996), 15 U.S.C. 272 note (1997).

[17] *See* Order No. 676, P 100.

[18] Consistent with the Commission's determination in Order Nos. 676 and 676–C, we are not proposing to incorporate by reference Standards 001–0.1, 001–0.9 through 001–0.13, and 001–1.0 through 001–1.8 because these standards merely restate Commission regulations and Standard 001–9.7 because it is not consistent with the Commission's policy on redirects. Order No. 676, P 51 & n.40.

[19] *Standards of Conduct for Transmission Providers,* Order No. 717, 73 FR 63,796 (Oct. 27, 2008), FERC Stats. & Regs ¶ 31,280 (2008), *reh'g pending.*

[20] Order No. 890, P 1043–47.

18. Additionally, NAESB has developed other standards related to conditional firm service in response to the Commission's requests for the development of specific standards in Order Nos. 890 and 890–A.[21] Specifically, NAESB has developed Standard 001–21.1.6, which requires that transmission providers offer short-term firm service to conditional firm customers as capacity (that would alleviate the constraints associated with a Conditional Curtailment Option reservation) becomes available. In response to Order No. 890–A, NAESB has created and modified standards in WEQ–001, Appendix C to WEQ–001, WEQ–002, WEQ–003, WEQ–008 and WEQ–013, to provide a consistent set of tracking capabilities and business practices for tagging, as a means to implement conditional firm service.

2. Available Transfer Capability

19. NAESB developed several standards related to available transfer capability in response to Order No. 890. First, NAESB modified WEQ–001 to support the transparency reporting and related functions required by Order No. 890. Second, in response to the available transfer capability related posting requirements established by the Commission in Order No. 890, NAESB has developed business practice standards in WEQ–001 (including Standards 001–14, 001–15, 001–17, 001–18, 001–19, 001–20 and Appendix D), WEQ–002, WEQ–003 and WEQ–013 (including Appendices A and B).[22]

20. Standard 001–14 is designed to meet the requirement in Order No. 890 for transmission providers to post a narrative with regard to monthly or yearly available transfer capability values in instances when available transfer capability remains unchanged at a value of zero for six months or longer.[23] Standard 001–15 is designed to meet the requirement in Order No. 890 for transmission providers to post a brief, but specific, narrative explanation of the reason for a change in monthly and yearly available transfer capability values on a constrained path when a monthly or yearly available transfer capability value changes as a result of a 10 percent change in total transfer capability. This standard requires the narrative explanation to include the specific events that gave rise to the change and the new values for available transfer capability on that path.[24]

21. Standard 001–16.1 requires Transmission Providers to respond to questions about the methodology for calculating available transfer capability and available flowgate capability. We interpret this standard as requiring the Transmission Provider to provide data when necessary to respond to the methodology questions in order to be consistent with the requirement in Order No. 890 that transmission providers must, upon request, ''make available all data used to calculate [available transfer capability] and [total transfer capability] for any constrained paths and any system planning studies or specific network impact studies performed for customers.''[25]

22. Standard 001–17 governs the posting of the underlying load forecast assumptions used by transmission providers to calculate available transfer capability and, on a daily basis, their actual daily peak load for the prior day.[26]

23. Another standard developed by NAESB in response to Order No. 890 is Standard 001–18, which relates to postbacks of capacity to available transfer capability. In Order No. 890, the Commission directed public utilities, working through NERC, to modify available transfer capability related standards to require transmission providers to account for postbacks of redirected services and counterflows in their non-firm available transfer capability calculations.[27] In coordination with NERC, NAESB concluded that a business practice standard addressing counterflows was unnecessary because NERC had addressed it in the reliability standards, but that the postback issue necessitated the creation of a related business practice standard. Thus, NAESB developed Standard 001–18 and a related Appendix D to WEQ–001 to account for postbacks of capacity to available transfer capability.

24. Also in response to Order No. 890,[28] NAESB has developed standards that establish a consistent approach for determining the amount of transfer capability that a transmission provider can set aside for its native load and other committed uses. Specifically, Standard 001–19 addresses grandfathered agreements and Standard 001–20 addresses rollover rights. Furthermore, NAESB has developed business practice standards that complement NERC's reliability standards for existing transmission commitments. These standards appear in WEQ–001, WEQ–003, and WEQ–013.

25. One of the Commission's objectives in Order No. 890 was to reduce the potential for transmission providers to unduly discriminate when they provide transmission service by limiting their discretion to calculate available transfer capability using unknown assumptions and methodologies.[29] For this reason, the Commission found that ''all [Available Transfer Capability] components (*i.e.*, [total transfer capability], [existing transmission commitments], [capacity benefit margin], and [transmission reliability margin]) and certain data inputs, data exchange, and assumptions be consistent and that the number of industry-wide ATC calculation formulas be few in number, transparent and produce equivalent results.''[30]

26. The standards establish a mechanism for posting available transfer capacity for grandfathered agreements. The standards, however, provide for a different approach to posting grandfathered agreements using the Flowgate Methodology. Under Standard 001–19.1, transmission providers using the other available transfer capability calculation methodologies must post the aggregate MW value for the grandfathered agreements and such data must be posted so that it can be viewed and queried using the systemdata template. Standard 1–19.1.2 provides an exception for transmission providers using the Flowgate Methodology from the requirement to post an aggregate MW value that can be viewed and queried using the systemdata template. Instead, it requires that the transmission provider must post a list of Grandfathered Agreements with MW values that are expected to be scheduled or expected to flow. The standards, therefore, permit transmission providers using Available Transfer Capability (ATC) calculation methodologies other than the Flowgate Methodology to post less detailed information concerning grandfathered agreements than those using the Flowgate Methodology, but information concerning grandfathered agreements posted by those using the Flowgate Methodology is not accessible through the systemdata template.

3. ATC Information Link

27. The WEQ Version 002.1 standards establish the procedure for input of total transfer capability and available transfer

[21] Order No. 890, P 1078; Order No. 890–A, P 592.

[22] Order No. 890, P 369 and 371.

[23] *Id.* P 371.

[24] *Id.* P 369.

[25] Order No. 890, P 348.

[26] *Id.* P 413.

[27] *Id.* P 212.

[28] *Id.* P 243.

[29] The Commission reasoned that the potential for discrimination does not lie primarily in the choice of an available transfer capability calculation methodology, but rather in the consistent application of its components. *Id.* P 208.

[30] Order No. 890, P 207.

capability methodologies and values to be used by public utilities in calculating their total transfer capability and available transfer capability. NAESB developed these business practice standards in close coordination with the NERC available transfer capability drafting team. Furthermore, NERC and NAESB determined that the standards contained in NERC MOD–003 were better classified as business practice standards than reliability standards. As a result, NAESB developed Standard 001–13.1.5, which provides for an ATC Information Link on OASIS. This standard requires that Transmission Providers post several links on the ATC Information Link, including links to their Available Transfer Capability Implementation Document (as specified in NERC reliability standard MOD–001–1), Capacity Benefit Margin Implementation Document (as specified in NERC reliability standard MOD–004–1), and Transmission Reserve Margin Implementation Document (as specified in NERC reliability standard MOD–008–1).[31]

28. Standard 001–13.1.5 provides that the posting of information on the ATC Information Link would be ''subject to the Transmission Provider's ability to redact certain provisions due to market, security or reliability sensitivity concerns.'' In Order No. 890, the Commission acknowledged that a transmission provider may require someone seeking access to CEII materials or proprietary customer information to sign a confidentiality agreement.[32] We expect the provision in NAESB Standard 001–13.1.5 for a transmission provider to redact sensitive information from postings to be implemented by a transmission provider subject to the OATT in a manner consistent with its obligation to make that information available to those with a legitimate need to access the information, subject to appropriate confidentiality restrictions.[33]

4. Capacity Benefit Margin

29. In addition to requiring that transmission providers include a link to their Capacity Benefit Margin Implementation Document on the ATC Information Link, as discussed above, the Version 002.1 standards allow for auditing of the use of capacity benefit margin using OASIS. This standard was developed in response to Order No. 890 and 890–A,[34] and necessitated modifications to WEQ–001, WEQ–002, WEQ–003, and WEQ–013. While the Commission also directed that public utilities, working through NERC and NAESB, ''develop clear standards for how the CBM value shall be determined, allocated across transmission paths, and used'' in Order No. 890,[35] the NAESB subcommittees determined that the NERC reliability standard MOD–004 adequately addressed this directive and therefore it was not necessary to develop any supporting NAESB business practice standards.[36]

30. On March 6, 2009, NERC filed comments with the Commission concerning Standard 004–18.2, suggesting that this Standard might be in conflict with Requirement 12 of NERC Reliability Standard MOD–004–1.[37] After comparing the two standards, we do not believe that they are in conflict. Incorporation by reference of the NAESB Standard would not seem to relieve an entity from the independent obligation to comply with the NERC Reliability Standard.

5. Performance Metrics

31. In response to several posting requirements in Order No. 890, NAESB developed and adopted Standard 001–13.1.3, which describes the Performance Metrics Link that transmission providers must have on the OASIS. Under the ''Transmission Service Requests Metrics'' link, transmission providers are required to post the information required by the Commission's regulations at 18 CFR 37.6(i), which includes: (1) The number of affiliate versus non-affiliate requests for transmission service that have been rejected; and (2) the number of affiliate versus non-affiliate requests for transmission service that have been made. Furthermore, this posting is required to detail the length of service request (*e.g.*, short-term or long-term) and the type of service requested (*e.g.*, firm point-to-point, non-firm point-to-point or network service).[38] Under the ''Transmission Study Metrics'' link, transmission providers must post the information concerning performance metrics relating to system impact and facilities studies[39] required by the Commission's regulations at 18 CFR 37.6(h). Under the ''Redispatch Cost'' link, transmission providers must post information required by the Commission's regulations at 18 CFR 37.6(j)(2) regarding redispatch costs. This information must include each transmission provider's monthly average cost of redispatch for each internal congested transmission facility or interface over which it provides redispatch service using planning redispatch or reliability redispatch under the *pro forma* OATT and a high and low redispatch cost for the month for each of these same transmission constraints.[40]

6. Rebid of Partial Service

32. The WEQ Version 002.1 standards cover the rebid of partial service across a single transmission provider's system. In response to Order No. 890, NAESB adopted business practice standards in its Version 002.1 standards to complement the OASIS Standards and Communication Protocol standards that it had already developed for the rebid of partial service across a single Transmission Provider's system. These revisions appear in the OASIS Standards.

7. Pre-Confirmed Transmission Service Requests

33. In WEQ–001, WEQ–002 and WEQ–013, NAESB has developed business practice standards to complement the Commission's policies regarding pre-confirmed transmission service requests, as articulated in Order No. 890. As required by Order No. 890, these standards ''give priority only to pre-confirmed non-firm point-to-point transmission service requests and short-term firm point-to-point transmission service requests''[41] and provide that ''longer duration requests for transmission service will continue to

[31] These three implementation documents are described in the NERC reliability standards, which are addressed in a companion Notice of Proposed Rulemaking being issued in Docket No. RM08–19–000.

[32] Order No. 890, P 326.

[33] *See* Order No. 890, P 403–04 (requiring the development of standard disclosure for timely disclosure of CEII information to those with a legitimate need for it).

[34] Order No. 890, P 262 and Order No. 890–A, P 68.

[35] Order No. 890, P 257. *See also,* Order No. 890–A, P 68 and 83.

[36] *See,* NAESB Version 002.1 cover letter filed on Feb. 19, 2009 at 69.

[37] Standard 004–18.2 states that: ''The Transmission Provider may require the specification of a unique Transmission Reservation Number in association with any request for use of CBM. Such requirement shall be fully documented in the Transmission Provider's Business Practices posted on OASIS. The TSP reserves the right to deny any RFI requesting use of CBM if the required Transmission Reservation Number is not specified.''

Requirement 12 of Standard MOD–004–1 requires transmission providers to approve, within the bounds of reliable operation, any arranged interchange using CBM that is submitted by an energy deficient entity under energy emergency alerts, if (1) CBM is available, (2) an emergency alert is declared within the balancing authority of the energy deficient entity, and (3) the energy deficient entity is located within the transmission provider's service area.

[38] Order No. 890, P 413.

[39] *Id.* P 1318.

[40] *Id.* P 1162.

[41] *Id.* P 1401.

have priority over shorter duration requests for transmission service, with pre-confirmation serving as a tie-breaker for requests of equal duration.'' [42] In addition, as requested by the Commission in Order No. 890, NAESB has developed a consensus solution to the question of whether a transmission customer should be prohibited from changing a request into a pre-confirmed request.[43]

8. Ancillary Services and Demand Response

34. NAESB amended the definitions of certain ancillary services contained in WEQ–001 to reflect the definitions contained in the *pro forma* OATT as revised by Order No. 890. These definitions describe the types of ancillary services that are offered on OASIS. The revisions to the definitions reflect the possible role of demand resources in the provision of ancillary services by identifying non-generation resources capable of providing a given ancillary service as potential providers of the service. These modifications include revisions to Standards 001–2.5.2 through 001–2.5.6.[44]

9. Rollover Rights

35. In the Version 002.1 standards, NAESB has included new standards and modifications to existing standards in WEQ–001, WEQ–003, and WEQ–013 that relate to rollover rights. As discussed above, these standards were developed in part as a response to Order No. 890,[45] in which the Commission directed public utilities, working through NERC and NAESB, to develop standards that establish a consistent approach for determining the amount of transfer capability that a transmission provider can set aside for its native load and other committed uses. However, these standards also include business practices relating to rollover rights; for example, Standard 001–20 describes the process by which Transmission Customers may exercise their rollover rights.[46] The modifications to the standards relating to rollover rights that NAESB has included in its Version 002.1 filing [47] are the result of only the first part of a two part process through which NAESB is working to develop standards that are consistent with the Commission's policy on rollover rights as described in Order Nos. 676, 890, and 890–A.[48]

10. Insufficient Transfer Capacity

36. Standard 001–4.7.1 provides the OASIS posting procedure to be followed when there is insufficient transfer capacity to satisfy a customer's request and partial service is either not required or is unavailable.[49] While we propose to incorporate this standard by reference into our regulations, we note that it does not address or otherwise limit other obligations that might exist under the *pro forma* OATT, such as the requirement in section 15.2 to perform a System Impact Study.[50]

11. Miscellaneous OASIS Standards

37. In Order No. 890, the Commission decided that NAESB would be the best entity to address the issue of making OASIS platforms accessible on non-Windows/Explorer computers.[51] NAESB has developed standards concerning this issue as part of its OASIS Standards. Additionally, in the Version 002.1 standards NAESB modified WEQ–002, WEQ–003, and WEQ–013 to complement the new and revised standards adopted in response to Order No. 890. These revisions support annotations for available transfer capability, load forecast and actual load, rebid of partial service, pre-confirmation priority, and conditional firm service. NAESB also added an Appendix C to WEQ–001 that provides a list of broad based OASIS exemptions that have been granted to specific groups in the electric industry by the Commission through its Orders and regulations.

B. Business Practice Standards to Coordinate With Reliability Standards Unrelated to Order No. 890

38. In the Version 002.1 standards for Coordinate Interchange, (WEQ–004), Area Control Error (ACE) Equation Special Cases (WEQ–005), Inadvertent Interchange Payback (WEQ–007), and Transmission Loading Relief—Eastern Interconnection (WEQ–008), NAESB has made minor modifications to the format of the standards and has revised section titles.

39. In the Version 002.1 standards, NAESB added Standard 004–18 to the Coordinate Interchange Standards (WEQ–004), which describes the requirements for submitting a Request for Interchange that uses a Transmission Provider's capacity benefit margin to support energy imports into a load balancing authority area served by the Transmission Provider. Additionally, the Version 002.1 standards include modifications to the timing table in Appendix D of the Coordinate Interchange Standards (WEQ–004). The NERC/NAESB Joint Interchange Scheduling Working Group modified previous versions of this table by dividing it into two separate tables, one that provides the timing requirements for the Western Electricity Coordinating Council and one that provides the timing requirements for all other interconnections. These tables were modified to reflect time changes for Generator-Provider Entity, Load-Serving Entity, and Purchase-Selling Entity market assessments so that they are concurrent with the Balancing Authority and Transmission Service Provider reliability assessments. Also, timeline diagrams for each table were added for clarification.[52]

40. In the Version 002.1 standards for Manual Time Error Correction (WEQ–006), NAESB has included revisions to maintain conformance with NERC Standard BAL–004.[53] NAESB states that NERC recently revised Standard BAL–004 to remove inappropriate requirements on reliability coordinators that voluntarily agree to serve as Interconnection Time Monitors.[54] In

[42] *Id.*

[43] *Id.* P 1392.

[44] On November 14, 2008, NAESB reported that these standards, among others, have been approved by the WEQ Executive Committee and ratified by the NAESB membership.

[45] Order No. 890, P 243.

[46] Although we have previously determined not to incorporate Standard 001–9.7 dealing with rollover rights and redirects, we are proposing to incorporate by reference Standard 001–9.5.3, which refers to the not-accepted Standard 001–9.7. The reference, however, does not affect the meaning of the Standard 001–9.5.3, and any redirect issues are governed by the Commission's pro forma Open Access Transmission Tariff.

[47] NAESB Version 002.1 cover letter filed on Feb. 19, 2009 at 7.

[48] NAESB reports, *id.,* that part one of this process included revisions it made to the definition of ''unexercised rollover rights'' in WEQ–001, and modifications to the existing standards in WEQ–001, WEQ–003 and WEQ–013. NAESB further reports, *id.,* that in part two of this process it intends to revise Standard 001–9.7 as part of its Order No. 890 work plan, and to include this revision in its Version 002.2 standards.

[49] Standard 001–4.7.1 states: ''If the Transmission Provider determines there is insufficient transfer capability available to grant the Transmission Customer's request and there is no obligation to provide Partial Service (or Partial Service is also not available in cases where the Transmission Provider is obligated to provide Partial Service), the Transmission Provider may respond by setting the request status to REFUSED.''

[50] Section 15.2 of the *pro forma* OATT states that: ''In the event sufficient transfer capability may not exist to accommodate a service request, the Transmission Provider will respond by performing a System Impact Study.''

[51] Order No. 890, P 1392.

[52] NAESB Version 002.1 cover letter filed on Feb. 19, 2009 at 8.

[53] NAESB reports that this item was voted out of the subcommittee on June 4, 2008, passed an Executive Committee vote on Aug. 19, 2008, and the ratification process will complete on Sep. 22, 2008. In its supplemental report dated Nov. 14, 2008, NAESB advised that this revision was ratified on Sep. 22, 2008.

[54] NERC filed Standard BAL–004–1 with the Commission for approval in Docket Nos. RM09–13–

addition, NAESB has revised a section title in this standard.

41. In the Version 002.1 standards for Transmission Loading Relief—Eastern Interconnection (WEQ–008), NAESB made a minor modification to a standard to accommodate conditional firm service and the use of capacity benefit margin. Additionally, NAESB modified these standards to clarify the intended use of the nine Transmission Loading Relief levels addressed in the standards, and to ensure consistency between WEQ–008 and the NERC reliability standard IRO–006, both of which address transmission loading relief. We propose to update the Commission's regulations to incorporate by reference Version 002.1 of these standards.

C. Other Standards

1. Gas/Electric Coordination Standards

42. In the Version 002.1 standards for Gas/Electric Coordination (WEQ–011), NAESB made a minor correction to rearrange the definitions so that they appear in alphabetical order. We propose to incorporate by reference into the Commission's regulations Version 002.1 of this standard.

2. Public Key Infrastructure (PKI) Standards

43. In the Version 002.1 standards for Public Key Infrastructure (WEQ–012), NAESB made a minor revision to the endnote. We propose to incorporate by reference into the Commission's regulations the updated Version 002.1 of this standard.

III. Notice of Use of Voluntary Consensus Standards

44. Office of Management and Budget Circular A–119 (section 11) (February 10, 1998) provides that federal agencies should publish a request for comment in a NOPR when the agency is seeking to issue or revise a regulation proposing to adopt a voluntary consensus standard or a government-unique standard. In this NOPR, the Commission is proposing to incorporate by reference a voluntary consensus standard developed by the NAESB WEQ.

IV. Information Collection Statement

45. The following collections of information contained in this proposed rule have been submitted to the Office of Management and Budget (OMB) for review under section 3507(d) of the Paperwork Reduction Act of 1995, 44 U.S.C. 3507(d). The Commission solicits comments on the Commission's need for this information, whether the information will have practical utility, the accuracy of the provided burden estimates, ways to enhance the quality, utility, and clarity of the information to be collected, and any suggested methods for minimizing respondents' burden, including the use of automated information techniques. Respondents subject to the filing requirements of this rule will not be penalized for failing to respond to these collections of information unless the collections of information display a valid OMB Control number.

46. The following burden estimate is based on the projected costs for the industry to implement revisions to the WEQ Standards currently incorporated by reference into the Commission's regulations at 18 CFR 38.2 and to implement the new standards adopted by NAESB that we propose here to incorporate by reference.

Data collection	Number of respondents	Number of responses per respondent	Hours per response	Total number of hours
FERC–516	176	1	6	1056
FERC–717	176	1	12	2112
Totals				3168

Total Annual Hours for Collection: (Reporting and Recordkeeping, (if appropriate)) = 3168 hours.

Information Collection Costs: The Commission seeks comments on the costs to comply with these requirements. It has projected the average annualized cost for all respondents to be the following: [55]

	FERC–516	FERC–717
Annualized Capital/Startup Costs	$390,720	$781,440
Annualized Costs (Operations & Maintenance)	N/A	
Total Annualized Costs	390,720	781,440

47. OMB regulations [56] require OMB to approve certain information collection requirements imposed by agency rule. The Commission is submitting notification of this proposed rule to OMB. These information collections are mandatory requirements.

Title: Standards for Business Practices and Communication Protocols for Public Utilities (formerly Open Access Same Time Information System) (FERC–717); Electric Rate Schedule Filings (FERC–516).

Action: Proposed collection.

OMB Control No.: 1902–0096 (FERC–516); 1902–0173 (FERC–717).

Respondents: Business or other for profit, (Public Utilities—Not applicable to small businesses).

Frequency of Responses: One-time implementation (business procedures, capital/start-up).

Necessity of the Information: This proposed rule, if implemented would supplement the changes the Commission required in Order Nos. 890, 890–A, and 890–B to require that transmission services are provided on a basis that is just, reasonable and not unduly discriminatory. In addition this proposed rule would upgrade the Commission's current business practice and communication standards.

000 and RM06–16–000 on March 12, 2009 and this filing is currently pending before the Commission.

[55] The total annualized costs for the information collection is $1,172,160. This number is reached by multiplying the total hours to prepare responses (3168) by an hourly wage estimate of $370 (a composite estimate that includes legal, technical and support staff rates, $250 + $95 + $25 = $370), 3168 hours × $370/hour = $1,172,160.

[56] CFR 1320.11.

Specifically, these standards include several modifications to the existing business practice standards as well as creating new standards to provide additional functionality for OASIS transactions. These practices will ensure that potential customers of open access transmission service receive access to information that will enable them to obtain transmission service on a non-discriminatory basis and will assist the Commission in maintaining a safe and reliable infrastructure. The implementation of these standards and regulations is necessary to increase the efficiency of the wholesale electric power grid.

48. The information collection requirements of this proposed rule are based on the transition from transactions being made under the existing business practice standards to conducting such transactions under the proposed revisions to these standards and to account for the burden associated with the new standards the Commission proposes to incorporate in its regulations.

49. *Internal Review:* The Commission has reviewed the revised business practice standards and has made a preliminary determination that the proposed revisions are necessary to maintain consistency between the business practice standards and reliability standards on this subject. The Commission has assured itself, by means of its internal review, that there is specific, objective support for the burden estimate associated with the information requirements.

50. Interested persons may obtain information on the reporting requirements by contacting the following: Federal Energy Regulatory Commission, *Attn*: Michael Miller, Office of the Executive Director, 888 First Street, NE., Washington, DC 20426, *Tel:* (202) 502–8415/Fax: (202) 273–0873, *e-mail: michael.miller@ferc.gov.*

51. Comments concerning the information collections proposed in this NOPR and the associated burden estimates, should be sent to the contact listed above and to the Office of Management and Budget, Office of Information and Regulatory Affairs, Washington, DC 20503 [Attention: Desk Officer for the Federal Energy Regulatory Commission, *phone:* (202) 395–7345, *fax:* (202) 395–7285].

V. Environmental Analysis

52. The Commission is required to prepare an Environmental Assessment or an Environmental Impact Statement for any action that may have a significant adverse effect on the human environment.[57] The Commission has categorically excluded certain actions from these requirements as not having a significant effect on the human environment.[58] The actions proposed here fall within categorical exclusions in the Commission's regulations for rules that are clarifying, corrective, or procedural, for information gathering, analysis, and dissemination, and for sales, exchange, and transportation of electric power that requires no construction of facilities.[59] Therefore, an environmental assessment is unnecessary and has not been prepared in this NOPR.

VI. Regulatory Flexibility Act Certification

53. The Regulatory Flexibility Act of 1980 (RFA)[60] generally requires a description and analysis of final rules that will have significant economic impact on a substantial number of small entities. The regulations proposed here impose requirements only on public utilities, which generally are not small businesses, and, these requirements are, in fact, designed to benefit all customers, including small businesses.

54. The Commission has followed the provisions of both the RFA and the Paperwork Reduction Act on potential impact on small business and other small entities. Specifically, the RFA directs agencies to consider four regulatory alternatives to be considered in a rulemaking to lessen the impact on small entities: tiering or establishment of different compliance or reporting requirements for small entities, classification, consolidation, clarification or simplification of compliance and reporting requirements, performance rather than design standards, and exemptions. As the Commission originally stated in Order No. 889, the OASIS regulations now known as Standards for Business Practices and Communication Protocols for Public Utilities, apply only to public utilities that own, operate, or control transmission facilities subject to the Commission's jurisdiction and should a small entity be subject to the Commission's jurisdiction, it may file for waiver of the requirements. This is consistent with the exemption provisions of the RFA. Accordingly, pursuant to section 605(b) of the RFA,[61] the Commission hereby certifies that the regulations proposed herein will not have a significant adverse impact on a substantial number of small entities.

VII. Comment Procedures

55. The Commission invites interested persons to submit comments on the matters and issues proposed in this notice to be adopted, including any related matters or alternative proposals that commenters may wish to discuss. Comments are due April 24, 2009. Comments must refer to Docket No. RM05–5–013, and must include the commenter's name, the organization they represent, if applicable, and their address. Comments may be filed either in electronic or paper format.

56. Comments may be filed electronically via the eFiling link on the Commission's Web site at *http://www.ferc.gov.* The Commission accepts most standard word processing formats and commenters may attach additional files with supporting information in certain other file formats. Commenters filing electronically do not need to make a paper filing. Commenters that are not able to file comments electronically must send an original and 14 copies of their comments to: Federal Energy Regulatory Commission, Secretary of the Commission, 888 First Street, NE., Washington, DC 20426.

57. All comments will be placed in the Commission's public files and may be viewed, printed, or downloaded remotely as described in the Document Availability section below. Commenters on this proposal are not required to serve copies of their comments on other commenters.

VIII. Document Availability

58. In addition to publishing the full text of this document in the **Federal Register**, the Commission provides all interested persons an opportunity to view and/or print the contents of this document via the Internet through FERC's Home Page (*http://www.ferc.gov*) and in FERC's Public Reference Room during normal business hours (8:30 a.m. to 5 p.m. Eastern time) at 888 First Street, NE., Room 2A, Washington, DC 20426.

59. From FERC's Home Page on the Internet, this information is available in the eLibrary. The full text of this document is available in the eLibrary both in PDF and Microsoft Word format for viewing, printing, and/or downloading. To access this document in eLibrary, type the docket number

[57] *Regulations Implementing the National Environmental Policy Act,* Order No. 486, 52 FR 47,897 (Dec. 17, 1987), FERC Stats. & Regs., Regulations Preambles ¶ 30,783 (1987).

[58] 18 CFR 380.4.

[59] *See* 18 CFR 380.4(a)(2)(ii), 380.4(a)(5), 380.4(a)(27).

[60] 5 U.S.C. 601–612.

[61] 5 U.S.C. 605(b).

excluding the last three digits of this document in the docket number field.[62]

60. User assistance is available for eLibrary and the FERC's web site during our normal business hours. For assistance contact FERC Online Support at *FERCOnlineSupport@ferc.gov* or toll-free at (866) 208–3676, or for TTY, contact (202) 502–8659.

List of Subjects in 18 CFR Part 38

Conflict of interests, Electric power plants, Electric utilities, Incorporation by reference, Reporting and recordkeeping requirements.

By direction of the Commission.

Kimberly D. Bose,

Secretary.

In consideration of the foregoing, the Commission proposes to amend Chapter I, Title 18, part 38 of the *Code of Federal Regulations,* as follows:

PART 38—BUSINESS PRACTICE STANDARDS AND COMMUNICATION PROTOCOLS FOR PUBLIC UTILITIES

1. The authority citation for part 38 continues to read as follows:

Authority: 16 U.S.C. 791–825r, 2601–2645; 31 U.S.C. 9701; 42 U.S.C. 7101–7352.

2. In § 38.2, paragraphs (a)(1) through (11) are revised to read as follows:

§ 38.2 Incorporation by reference of North American Energy Standards Board Wholesale Electric Quadrant standards

(a) * * *

(1) Open Access Same-Time Information Systems (OASIS), Version 1.5 (WEQ–001, Version 002.1, March 11, 2009) with the exception of Standards 001–0.1, 001–0.9 through 001–0.13, 001–1.0 through 001–1.8, and 001–9.7;

(2) Open Access Same-Time Information Systems (OASIS) Standards & Communication Protocols, Version 1.5 (WEQ–002, Version 002.1, March 11, 2009);

(3) Open Access Same-Time Information Systems (OASIS) Data Dictionary, Version 1.5 (WEQ–003, Version 002.1, March 11, 2009);

(4) Coordinate Interchange (WEQ–004, Version 002.1, March 11, 2009);

(5) Area Control Error (ACE) Equation Special Cases (WEQ–005, Version 002.1, March 11, 2009);

(6) Manual Time Error Correction (WEQ–006, Version 002.1, March 11, 2009);

(7) Inadvertent Interchange Payback (WEQ–007, Version 002.1, March 11, 2009);

(8) Transmission Loading Relief—Eastern Interconnection (WEQ–008, Version 002.1, March 11, 2009);

(9) Gas/Electric Coordination (WEQ–011, Version 002.1, March 11, 2009);

(10) Public Key Infrastructure (PKI) (WEQ–012, Version 002.1, March 11, 2009); and

(11) Open Access Same-Time Information Systems (OASIS) Implementation Guide, Version 1.5 (WEQ–013, Version 002.1, March 11, 2009).

* * * * *

[FR Doc. E9–6504 Filed 3–24–09; 8:45 am]

BILLING CODE 6717–01–P

DEPARTMENT OF ENERGY

Federal Energy Regulatory Commission

18 CFR Part 40

[Docket Nos. RM08–19–000, RM08–19–001, RM09–5–000, RM06–16–005]

Mandatory Reliability Standards for the Calculation of Available Transfer Capability, Capacity Benefit Margins, Transmission Reliability Margins, Total Transfer Capability, and Existing Transmission Commitments and Mandatory Reliability Standards for the Bulk-Power System

Issued March 19, 2009.

AGENCY: Federal Energy Regulatory Commission.

ACTION: Notice of Proposed Rulemaking.

SUMMARY: Pursuant to section 215 of the Federal Power Act, the Commission proposes to approve six Modeling, Data, and Analysis Reliability Standards submitted to the Commission for approval by the North American Electric Reliability Corporation, the Electric Reliability Organization certified by the Commission. The proposed Reliability Standards require certain users, owners, and operators of the Bulk-Power System to develop consistent methodologies for the calculation of available transfer capability or available flowgate capability.

DATES: Comments are due May 26, 2009.

ADDRESSES: You may submit comments, identified by docket number by any of the following methods:

- *Agency Web site: http://ferc.gov.* Documents created electronically using word processing software should be filed in native applications or print-to-PDF format and not in a scanned format.
- *Mail/Hand Delivery:* Commenters unable to file comments electronically must mail or hand deliver an original and 14 copies of their comments to: Federal Energy Regulatory Commission, Secretary of the Commission, 888 First Street, NE., Washington, DC 20426.

FOR FURTHER INFORMATION CONTACT: Mason Emnett (Legal Information), Office of the General Counsel, Federal Energy Regulatory Commission, 888 First Street, NE., Washington, DC 20426, (202) 502–6540, Cory Lankford (Legal Information), Office of the General Counsel, Federal Energy Regulatory Commission, 888 First Street, NE., Washington, DC 20426, (202) 502–6711, Keith O'Neal (Technical Information), Office of Electric Reliability, Federal Energy Regulatory Commission, 888 First Street, NE., Washington, DC 20426, (202) 502–6339, Christopher Young (Technical Information), Office of Electric Reliability, Federal Energy Regulatory Commission, 888 First Street, NE., Washington, DC 20426, (202) 502–6403.

SUPPLEMENTARY INFORMATION:

Table of Contents

	Paragraph numbers
I. Background	4
A. Order Nos. 888 and 889	4
B. Order Nos. 890 and 693	8
II. Proposed Reliability Standards	12
A. Coordination with Business Practice Standards	17
B. Available Transmission System Capability, MOD–001–1	19
C. Capacity Benefit Margin Methodology, MOD–004–1	26
D. Transmission Reliability Margin Methodology, MOD–008–1	41

[62] NAESB's August 29, 2008 submittal is also available for viewing in eLibrary. The link to this file is as follows: *http://elibrary.ferc.gov/idmws/common/opennat.asp?fileID=11793503.*

	Paragraph numbers
E. Three Methodologies for Calculating Available Transfer Capability	51
1. Area Interchange Methodology, MOD–028–1	53
2. Rated System Path Methodology, MOD–029–1	61
3. Flowgate Methodology, MOD–030–2	65
F. Implementation Plan	72
III. Discussion	75
A. Implementation of the Reliability Standards	80
1. Available Transfer Capability Implementation Documents	87
2. Capacity Benefit Margin Implementation Documents	95
3. Transmission Reliability Margin Implementation Documents	98
B. Proposed Modifications of the Reliability Standards	102
1. Availability of Implementation Documents	103
2. Consistent Treatment of Assumptions	106
3. Capacity Benefit Margin (MOD–004–1)	109
4. Calculation of Total Transfer Capability under the Rated System Path Methodology (MOD–029–1)	112
5. Treatment of Network Resource Designations	116
C. Violation Risk Factors and Violation Severity Levels	121
D. Disposition of Other Reliability Standards	130
1. MOD–010–1 through MOD–025–1	130
2. Reliability Standards Proposed to be Retired or Withdrawn	133
E. Definitions	139
IV. Information Collection Statement	143
V. Environmental Analysis	148
VI. Regulatory Flexibility Act Certification	149
VII. Comment Procedures	151
VIII. Document Availability	155

1. Pursuant to section 215 of the Federal Power Act (FPA),[1] the Federal Energy Regulatory Commission (Commission) proposes to approve, and direct modifications to, six Modeling, Data and Analysis (MOD) Reliability Standards submitted to the Commission by the North American Electric Reliability Corporation (NERC), which has been certified by the Commission as the Electric Reliability Organization (ERO) for the United States.[2] The proposed Reliability Standards pertain to methodologies for the consistent and transparent calculation of available transfer capability or available flowgate capability. The Commission also proposes to retire the existing MOD Reliability Standards replaced by the versions proposed here. The retirement of these Reliability Standards would be effective upon the effective date of the proposed MOD Reliability Standards.

2. In Order No. 890, the Commission found that the lack of a consistent and transparent methodology for calculating available transfer capability is a significant problem because the calculation of available transfer capability, which varies greatly depending on the criteria and assumptions used, may allow the transmission service provider to discriminate in subtle ways against its competitors.[3] The calculation of available transfer capability is one of the most critical functions under the open access transmission tariff (OATT) because it determines whether transmission customers can access alternative power supplies. Improving transparency and consistency of available transfer capability calculation methodologies will eliminate transmission service providers' wide discretion in calculating available transfer capability and ensure that customers are treated fairly in seeking alternative power supplies. The Commission believes that the Reliability Standards proposed here address the potential for undue discrimination by requiring industry-wide transparency and increased consistency regarding all components of the available transfer capability calculation methodology and certain definitions, data, and modeling assumptions.

3. The Commission proposes to approve the Reliability Standards filed by NERC in this proceeding as just, reasonable, not unduly discriminatory or preferential, and in the public interest. These Reliability Standards represent a step forward in eliminating the broad discretion previously afforded transmission service providers in the calculation of available transfer capability. The proposed Reliability Standards will enhance transparency in the calculation of available transfer capability, requiring transmission operators and transmission service providers to calculate available transfer capability using a specific methodology that is both explicitly documented and available to reliability entities who request it.[4] The proposed Reliability Standards also require documentation of the detailed representations of the various components that comprise the available transfer capability equation, including the specification of modeling and risk assumptions and the disclosure of outage processing rules to other reliability entities. These actions will make the processes to calculate available transfer capability and its various components more transparent,

[1] 16 U.S.C. 824o.

[2] *North American Electric Reliability Corp.,* 116 FERC ¶ 61,062 (ERO Certification Order), *order on reh'g & compliance,* 117 FERC ¶ 61,126 (ERO Rehearing Order) (2006), *appeal docketed sub nom. Alcoa, Inc.* v. *FERC,* No. 06–1426 (DC Cir. Dec. 29, 2006).

[3] *Preventing Undue Discrimination and Preference in Transmission Service,* Order No. 890, 72 FR 12266 (Mar. 15, 2007), FERC Stats. & Regs. ¶ 31,241 (2007), *order on reh'g,* Order No. 890–A, 73 FR 2984 (Jan. 16, 2008), FERC Stats & Regs. ¶ 31,261 (2007), *order on reh'g,* Order No. 890–B, 73 FR 39092 (July 8, 2008), 123 FERC ¶ 61,299 (2008), *order on reh'g,* Order No. 890–C, 126 FERC ¶ 61,228 (2009).

[4] Reliability entities include: transmission service providers, planning coordinators, reliability coordinators, and transmission operators as those entities are defined in the NERC Glossary. Standards adopted by the North American Energy Standards Board (NAESB) govern disclosure of this information to other entities. The Commission addresses the proposed NAESB business practices in a Notice of Proposed Rulemaking issued concurrently in Docket No. RM05–5–013. *See Standards for Business Practices and Communication Protocols for Public Utilities,* 126 FERC ¶ 61,248 (2009).

which in turn will allow the Commission and others to ensure consistency in their application.

I. Background

A. Order Nos. 888 and 889

4. In April 1996, as part of its statutory obligation under sections 205 and 206 of the FPA [5] to remedy undue discrimination, the Commission adopted Order No. 888 prohibiting public utilities from using their monopoly power over transmission to unduly discriminate against others.[6] In that order, the Commission required all public utilities that own, control or operate facilities used for transmitting electric energy in interstate commerce to file open access non-discriminatory transmission tariffs that contained minimum terms and conditions of non-discriminatory service. It also obligated such public utilities to ''functionally unbundle'' their generation and transmission services. This meant that public utilities had to take transmission service (including ancillary services) for their own new wholesale sales and purchases of electric energy under the open access tariffs, and to separately state their rates for wholesale generation, transmission and ancillary services.[7] Each public utility was required to file the *pro forma* OATT included in Order No. 888 without any deviation (except a limited number of terms and conditions that reflect regional practices).[8] After their OATTs became effective, public utilities were allowed to file, pursuant to section 205 of the FPA, deviations that were consistent with or superior to the *pro forma* OATT's terms and conditions.

5. The same day it issued Order No. 888, the Commission issued a companion order, Order No. 889,[9] addressing the separation of vertically integrated utilities' transmission and merchant functions, the information transmission service providers were required to make public, and the electronic means they were required to use to do so. Order No. 889 imposed Standards of Conduct governing the separation of, and communications between, the utility's transmission and wholesale power functions, to prevent the utility from giving its merchant arm preferential access to transmission information. All public utilities that owned, controlled or operated facilities used in the transmission of electric energy in interstate commerce were required to create or participate in an Open Access Same-Time Information System (OASIS) that was to provide existing and potential transmission customers the same access to transmission information.

6. Among the information public utilities were required to post on their OASIS was the transmission service provider's calculation of available transfer capability. Though the Commission acknowledged that before-the-fact measurement of the availability of transmission service is ''difficult,'' the Commission concluded that it was important to give potential transmission customers ''an easy-to-understand indicator of service availability.'' [10] Because formal methods did not then exist to calculate available transfer capability and total transfer capability, the Commission encouraged industry efforts to develop consistent methods for calculating available transfer capability and total transfer capability.[11] Order No. 889 ultimately required transmission service providers to base their calculations on ''current industry practices, standards and criteria'' and to describe their methodology in an Attachment C to their tariffs.[12] The Commission noted that the requirement that transmission service providers purchase only available transfer capability that is posted as available ''should create an adequate incentive for them to calculate available transfer capability and total transfer capability as accurately and as uniformly as possible.'' [13]

7. Although Order No. 888 obligated each public utility to calculate the amount of transfer capability on its system available for sale to third parties, the Commission did not standardize the methodology for calculating available transfer capability, nor did it impose any specific requirements regarding the disclosure of the methodologies used by each transmission service provider.[14] As a result, a variety of available transfer capability calculation methodologies have been used with very few clear rules governing their use. Moreover, there was often very little transparency about the nature of these calculations, given that many transmission service providers historically filed only summary explanations of their available transfer capability methodologies in Attachment C to their OATTs.

B. Order Nos. 890 and 693

8. Section 215 of the FPA requires a Commission-certified ERO to develop mandatory and enforceable Reliability Standards, which are subject to Commission review and approval. If approved, the Reliability Standards are enforced by the ERO, subject to Commission oversight, or by the Commission independently. As the ERO, NERC worked with industry to develop Reliability Standards improving consistency and transparency of available transfer capability calculation methodologies. On April 4, 2006, as modified on August 28, 2006, NERC submitted to the Commission a petition seeking approval of 107 proposed Reliability Standards, including 23 Reliability Standards pertaining to Modeling, Data and Analysis (MOD). The MOD group of Reliability Standards is intended to standardize methodologies and system data needed for traditional transmission system operation and expansion planning, reliability assessment and the calculation of available transfer capability in an open access environment.

9. On February 16, 2007, the Commission issued Order No. 890, which addressed and remedied opportunities for undue discrimination under the *pro forma* OATT adopted in Order No. 888. Among other things, the Commission required industry-wide consistency and transparency of all components of available transfer

[5] 16 U.S.C. 824d, 824e.

[6] *Promoting Wholesale Competition Through Open Access Non-discriminatory Transmission Services by Public Utilities; Recovery of Stranded Costs by Public Utilities and Transmitting Utilities,* Order No. 888, 61 FR 21540 (May 10, 1996), FERC Stats. & Regs. ¶ 31,036 (1996), *order on reh'g,* Order No. 888–A, 62 FR 12274 (Mar. 14, 1997), FERC Stats. & Regs. ¶ 31,048 (1997), *order on reh'g,* Order No. 888–B, 81 FERC ¶ 61,248 (1997), *order on reh'g,* Order No. 888–C, 82 FERC ¶ 61,046 (1998), *aff'd in relevant part sub nom. Transmission Access Policy Study Group v. FERC,* 225 F.3d 667 (DC Cir. 2000), *aff'd sub nom. New York v. FERC,* 535 U.S. 1 (2002).

[7] This is known as ''functional unbundling'' because the transmission element of a wholesale sale is separated or unbundled from the generation element of that sale, although the public utility may provide both functions.

[8] *See* Order No. 888, FERC Stats. & Regs. ¶ 31,036 at 31,769–70 (noting that the *pro forma* OATT expressly identified certain non-rate terms and conditions, such as the time deadlines for determining available transfer capability in section 18.4 or scheduling changes in sections 13.8 and 14.6, that may be modified to account for regional practices if such practices are reasonable, generally accepted in the region, and consistently adhered to by the transmission service provider).

[9] *Open Access Same-Time Information System (Formerly Real-Time Information Networks) and Standards of Conduct,* Order No. 889, 61 FR 21737 (May 10, 1996), FERC Stats. & Regs. ¶ 31,035 (1996), *order on reh'g,* Order No. 889–A, FERC Stats. & Regs. ¶ 31,049 (1997), *order on reh'g,* Order No. 889–B, 81 FERC ¶ 61,253 (1997).

[10] Order No. 889, FERC Stats. & Regs. ¶ 31,035 at 21749.

[11] *Id.* at 21750.

[12] *Id.*

[13] *Id.*

[14] Order No. 888, FERC Stats. & Regs. ¶ 31,036 n.610.

capability calculation and certain definitions, data and modeling assumptions. The Commission concluded that the lack of industry-wide standards for the consistent calculation of available transfer capability poses a threat to the reliable operation of the Bulk-Power System, particularly with respect to the inability of one transmission service provider to know with certainty its neighbors' system conditions affecting its own available transfer capability values. As a result of this reliability concern, the Commission asserted that the proposed available transfer capability reforms were also supported by FPA section 215, through which the Commission has the authority to direct the ERO to submit a Reliability Standard that addresses a specific matter.[15] Thus, the Commission in Order No. 890 directed industry to develop Reliability Standards, using the ERO's Reliability Standards development procedures, that provide for consistency and transparency in the methodologies used by transmission owners to calculate available transfer capability.

10. The Commission stated in Order No. 890 that the available transfer capability-related Reliability Standards should, at a minimum, provide a framework for available transfer capability, total transfer capability and existing transmission commitments calculations. The Commission did not require a single computational process for calculating available transfer capability because, among other things, it found that the potential for discrimination and decline in reliability level does not lie primarily in the choice of an available transfer capability calculation methodology, but rather in the consistent application of its components, input and exchange data, and modeling assumptions.[16] The Commission found that, if all of the available transfer capability components, and certain data inputs and assumptions are consistent, the three available transfer capability calculation methodologies would produce predictable and sufficiently accurate, consistent, equivalent and replicable results.[17]

11. On March 16, 2007, the Commission issued Order No. 693, approving 83 of the 107 Reliability Standards filed by NERC in April 2006.[18] Of the 83 approved Reliability Standards, the Commission approved ten MOD Reliability Standards.[19] However, the Commission directed NERC to prospectively modify nine of the ten approved MOD Reliability Standards to be consistent with the requirements of Order No. 890.[20] The Commission reiterated the requirement from Order No. 890 that all available transfer capability components (*i.e.*, total transfer capability, existing transmission commitments, capacity benefit margin, and transmission reliability margin) and certain data input, data exchange, and assumptions be consistent and that the number of industry-wide available transfer capability calculation formulas be few in number, transparent and produce equivalent results.[21] The Commission directed public utilities, working through the NERC Reliability Standards and NAESB business practices development processes, to produce workable solutions to implement the available transfer capability-related reforms adopted by the Commission. The Commission also deferred action on 24 proposed Reliability Standards, which did not contain sufficient information to enable the Commission to propose a disposition.[22]

II. Proposed Reliability Standards

12. In response to the requirements of Order No. 890 and related directives of Order No. 693,[23] on August 29, 2008, NERC submitted for Commission approval five MOD Reliability Standards: MOD–001–1—Available Transmission System Capability, MOD–008–1—TRM Calculation Methodology (hereinafter Transmission Reliability Margin Methodology), MOD–028–1 Area Interchange Methodology, MOD–029–1—Rated System Path Methodology, and MOD–030–1—Flowgate Methodology.[24] On November 21, 2008, NERC submitted for Commission approval a sixth MOD Reliability Standard: MOD–004–1—Capacity Benefit Margin (hereinafter Capacity Benefit Margin Methodology). On March 6, 2009, NERC submitted for Commission approval: MOD–030–2—a revised Flowgate Methodology Reliability Standard and withdrew its request for approval of MOD–030–1.

13. The Available Transmission System Capability Reliability Standard (MOD–001–1) serves as an ''umbrella'' Reliability Standard that requires each applicable entity to select and implement one or more of the three available transfer capability methodologies found in MOD–028–1, MOD–029–1, or MOD–030–2. MOD–004–1 and MOD–008–1 provide for the calculation of capacity benefit margin and transmission reliability margin, which are inputs into the available transfer capability calculation. If approved, NERC states that its filing wholly addresses eight of the 24 Reliability Standards that the Commission did not approve in Order No. 693 because further information was needed.

14. NERC contends that the proposed Reliability Standards will have no undue negative effect on competition, nor will they unreasonably restrict available transfer capability on the Bulk-Power System beyond any restriction necessary for reliability and do not limit use of the Bulk-Power System in an unduly preferential manner. NERC contends that the increased rigor and transparency introduced in the development of available transfer capability and available flowgate capability calculations serve to mitigate the potential for undue advantages of one competitor over another. Under the proposed Reliability Standards, applicable entities are prohibited from making transmission capability available on a more conservative basis for commercial purposes than for either planning for native load or use in actual operations, thereby mitigating the potential for differing treatment of native load customers and transmission service customers. NERC states that data exchange, which has been heretofore voluntary, is now mandatory and it is required that the data be used in the available transfer capability/available flowgate capability calculations. None of these requirements exist in the

[15] FPA section 215(d)(5). 16 U.S.C. 824o(d)(5).

[16] Order No. 890, FERC Stats. & Regs. ¶ 31,241 at P 1029.

[17] *Id.* P 1030.

[18] *Mandatory Reliability Standards for the Bulk-Power System,* Order No. 693, 72 FR 16416 (Apr. 4, 2007), FERC Stats. & Regs. ¶ 31,242, *order on reh'g,* Order No. 693–A, 120 FERC ¶ 61,053 (2007).

[19] *Id.* P 1010.

[20] *Id.*

[21] *Id.* P 1029–30; *see also* Order No. 890, FERC Stats. & Regs. ¶ 31,241 at P 207.

[22] Order No. 693, FERC Stats. & Regs. ¶ 31,242 at P 287–303. Some of these Reliability Standards required the regional reliability organizations to develop criteria for use by users, owners or operators within each region. The Commission set aside such Reliability Standards and directed NERC to provide additional details prior to considering them for approval. *Id.* P 287–303.

[23] The Reliability Standards were originally due on December 10, 2007. *See* Order No. 890, FERC Stats. & Regs. ¶ 31,241 at P 223. NERC requested additional time to develop the Reliability Standards in order to address concerns raised in its stakeholder process. *See* NERC November 21, 2007 Request for Extension of Time, Docket Nos. RM05–17–000, *et al,* at 7. The Commission ultimately granted three requests for extension of time, extending NERC's deadline by over seven months, so that NERC could develop the Reliability Standards proposed here.

[24] NERC designates the version number of a Reliability Standard as the last digit of the Reliability Standard number. Therefore, version zero Reliability Standards end with ''–0'' and version one Reliability Standards end with ''–1.''

current available transfer capability-related Reliability Standards. NERC contends that these improvements help the Commission achieve many of the primary objectives of Order No. 890 regarding transparency, standardization and consistency in available transfer capability calculations.

15. NERC states that all three methodology Reliability Standards (MOD–028–1, MOD–029–1, and MOD–030–2) share fundamental equations that, while mathematically equivalent, are written in slightly different forms. As a result, the manner of determining the components varies between methodologies. The employment of any two methodologies, given the same inputs, may produce similar, but not identical, results. As noted by NERC there are fundamental differences in the proposed methodologies that can keep them from producing identical results. For example, the rated system path methodology does not use the same frequent simulations of power flow used by the other two methodologies. NERC states that the rated system path methodology therefore will rarely generate numbers that identically match those determined by an entity using the other two methodologies.

16. NERC proposes to make the MOD Reliability Standards proposed here applicable to transmission operators and transmission service providers. NERC states that the drafting team considered applying the Reliability Standards to the transmission operator instead of the transmission service provider. According to NERC, the Reliability Standard drafting team believes that the NERC Functional Model supports a determination that responsibility for several of the requirements lies with the transmission operator.[25] NERC also states that a number of entities argued in the NERC drafting process that the transmission service provider actually undertakes efforts to meet those requirements. NERC states that the drafting team believes this points to a delegation of tasks to a larger entity that is the byproduct of a regional transmission organization and its regional transmission tariff. Accordingly, NERC states that the MOD Reliability Standards retain the use of transmission operators in the Reliability Standards, and explained to entities how delegation or joint registration organizations address the compliance implications of the assignment.

A. Coordination With Business Practice Standards

17. NERC states that it has worked closely and collaboratively with NAESB, conducting numerous joint meetings and conference calls, to develop the Reliability Standards proposed here and related NAESB business-practice standards.[26] NERC states that the focus of the proposed Reliability Standards is to address only the reliability aspects of available transfer capability and available flowgate capability and not to address the commercial aspects of available transfer capability, except to the extent that commercial system availability closely matches actual remaining system capability. The associated NAESB business practice standards are intended to focus on the competitive aspects of these processes. Through implementation of these Reliability Standards, access to the grid may indirectly be restricted, but NERC states that NAESB business practices and Commission orders related to these Reliability Standards ensure that any limitation will be applied in a manner that ensures open access and promotes competition.

18. According to NERC, it and NAESB have coordinated the development of these business practices and the Reliability Standards to ensure that there are no duplications or double counting between the business practice standards and the Reliability Standards, and they will continue to coordinate as necessary so that the available transfer capability-related Reliability Standards are compatible and consistent.

B. Available Transmission System Capability, MOD–001–1

19. NERC proposes the Available Transmission System Capability Reliability Standard (MOD–001–1) as part of a set of Reliability Standards which are designed to work together to support a common reliability goal: to ensure that transmission service providers maintain awareness of available system capability and future flows on their own systems as well as those of their neighbors. NERC states that, historically, differences in implementation of available transfer capability methodologies and a lack of coordination between transmission service providers have resulted in cases where available transfer capability has been overestimated. As a result, systems have been oversold, resulting in potential or actual system operating limits and interconnection reliability operating limits being exceeded. NERC states that MOD–001–1 is the foundational Reliability Standard that obliges entities to select a methodology and then calculate available transfer capability or available flowgate capability using that methodology, thereby ensuring that the determination of available transfer capability is accurate and consistent across North America and that the transmission system is neither oversubscribed nor underutilized.

20. NERC states that, unlike the current set of voluntary available transfer capability standards, MOD–001–1 requires adherence to a specific documented and transparent methodology. NERC states that it requires applicable entities to calculate available transfer capability on a consistent schedule and for specific timeframes. According to NERC, MOD–001–1 requires users, owners and operators to disclose counterflow assumptions and outage processing rules to other reliability entities. NERC states that this Reliability Standard prohibits applicable entities from making transmission capability available on a more conservative basis for commercial purposes than the system's capability in actual operations. NERC's MOD–001–1 also requires entities, for the first time, to exchange and use available transfer capability data. NERC states that the Reliability Standard reflects industry's consensus best practices for determining available transfer capability.

21. As proposed, this Reliability Standard includes nine requirements, which would be applicable to all transmission service providers and transmission operators. To ensure consistency of enforcement, NERC states that each requirement is supported by a measure that identifies what is required and how the requirement will be enforced.

22. Under NERC's proposed Requirement R1, a transmission operator must select one of three methodologies for calculating available transfer capability or available flowgate capability for each available transfer capability path for each time frame (hourly, daily or monthly) for the facilities in its area. As stated above, the three proposed methodologies are: The area interchange methodology, the rated system path methodology, and the flowgate methodology.

23. Several proposed requirements within this Reliability Standard address

[25] NERC has developed a ''Functional Model'' that defines the set of functions that must be performed to ensure the reliability of the Bulk-Power System. The Functional Model identifies 14 functions and the name of a corresponding entity responsible for fulfilling each function. NERC's functional model can be found at *http://www.nerc.com/page.php?cid=2/247/108*.

[26] As noted above, the Commission addresses the proposed NAESB business practices in a Notice of Proposed Rulemaking issued concurrently in Docket No. RM05–5–013.

the calculation of available transfer capability or available flowgate capability. Requirement R2 requires each transmission service provider to calculate available transfer capability or available flowgate capability values hourly for the next 48 hours, daily for the next 31 calendar days and monthly for the next 12 months. Requirement R6 requires each transmission operator in its calculation of total transfer capability or total flowgate capability to use assumptions no more limiting than those used in its planning of operations. NERC contends that, consistent with the requirements of Order No. 890 and related directives of Order No. 693, Requirement R6 will minimize the differences between total transfer capability and total flowgate capability for transmission and transfer capability used in native load and reliability assessment studies.[27] Similarly, Requirement R7 requires each transmission service provider, in its calculation of available transfer capability or available flowgate capability, to use assumptions no more limiting than those used in its planning of operations. NERC contends that this requirement addresses the Commission's directive in Order No. 693 for the ERO to modify the available transfer capability Reliability Standards to include a requirement that the assumptions used in available transfer capability and available flowgate capability calculations be consistent with those used for planning the expansion or operation of the Bulk-Power System to the maximum extent possible.[28] Requirement R8 requires each transmission service provider to recalculate available transfer capability at a certain specified interval (hourly, daily, monthly) unless the input values specified in the available transfer capability calculation have not changed. NERC contends that Requirement R8 satisfies the Commission's directive to calculate available transfer capability on a consistent time interval.[29]

24. MOD–001–1 also proposes several record keeping and information sharing requirements for transmission service providers. Requirement R3 requires each transmission service provider to keep an available transfer capability implementation document that explains the implementation of its chosen methodology(ies), its use of counterflows, the identities of entities with which it exchanges information for coordination purposes, any capacity allocation processes, and the manner in which it considers outages. Requirement R4 requires transmission service providers to keep specific reliability entities advised regarding changes to the available transfer capability implementation document.[30] Requirement R5 requires the transmission service provider to make the available transfer capability implementation document available to those same reliability entities.[31] Finally, proposed Requirement R9 allows a transmission service provider thirty calendar days to begin to respond to a request from any other transmission service provider, planning coordinator, reliability coordinator or transmission operator for certain data to be used in the requestor's available transfer capability or available flowgate capability calculations.

25. In Order No. 693, the Commission directed the ERO to develop modifications to the available transfer capability Reliability Standards to include a requirement that applicable entities make available assumptions and contingencies underlying available transfer capability and total transfer capability calculations. NERC contends that this Reliability Standard addresses this issue by requiring disclosure in the available transfer capability implementation document under Requirement R3.1 and part of the data exchange required by Requirement R9. NERC states that it has agreed with NAESB that requirements for posting information are more appropriately addressed through the NAESB process. Accordingly, NERC states that NAESB will be addressing the requirements associated with posting this information, instead of NERC.

C. Capacity Benefit Margin Methodology, MOD–004–1

26. As proposed, the Capacity Benefit Margin Methodology Reliability Standard (MOD–004–1) provides for the calculation of capacity benefit margin, which is defined by NERC as the amount of firm transmission capability preserved by the transmission service provider for load-serving entities, whose loads are located on that transmission service provider's system, to enable access by the load-serving entities to generation from interconnected systems to meet generation reliability requirements.[32] The purpose of this Reliability Standard is to promote the consistent and reliable calculation, verification, preservation, and use of capacity benefit margin to support analysis and system operations. NERC states that preservation of capacity benefit margin for a load-serving entity allows that entity to reduce its installed generating capacity below that which may otherwise have been necessary without interconnections to meet its generation reliability requirements. NERC states that the transmission transfer capability preserved as capacity benefit margin is intended to be used by the load-serving entities only in times of emergency generation deficiencies.

27. NERC proposes to apply MOD–004–1 to transmission service providers, transmission planners, load-serving entities, resource planners and balancing authorities. As discussed more fully below, NERC states that it does not specify a particular methodology for calculating capacity benefit margin, but rather improves transparency by requiring adherence to specific documented and transparent methodology to ensure consistent and reliable calculation, verification, preservation and use of capacity benefit margin.

28. To improve consistency and transparency in the calculation of capacity benefit margin, the proposed Reliability Standard imposes twelve requirements on entities electing to use a capacity benefit margin. Requirement R1 requires the transmission service provider that maintains capacity benefit margin to prepare and keep current a capacity benefit margin implementation document that includes at a minimum: (1) The process through which a load-serving entity within a balancing authority associated with the transmission service provider, or the resource planner associated with that balancing authority area, may ensure that its need for transmission capacity to be set aside as capacity benefit margin will be reviewed and accommodated by the transmission service provider to the extent transmission capacity is

[27] *See* Order No. 890, FERC Stats. & Regs. ¶ 31,241 at P 237; Order No. 693, FERC Stats. & Regs. ¶ 31,242 at P 1051.

[28] Order No. 693, FERC Stats. & Regs. ¶ 31,242 at P 1057; *see also* Order No. 890, FERC Stats. & Regs. ¶ 31,241 at P 292.

[29] *See* Order No. 890, FERC Stats. & Regs. ¶ 31,241 at P 301; Order No. 693, FERC Stats. & Regs. ¶ 31,242 at P 1057.

[30] *These include:* Each planning coordinator, reliability coordinator, and transmission operator associated with the transmission service provider's area; and each planning coordinator, reliability coordinator, and transmission service provider adjacent to the transmission service provider's area.

[31] Although the Reliability Standards only require the transmission service provider to make the available transfer capability implementation document available to certain reliability entities, the NAESB standard on OASIS posting requirements (Standard 001–13.1.5) requires transmission service providers to provide a link to the document on OASIS.

[32] *See* North American Electric Reliability Council, *Glossary of Terms Used in Reliability Standards (Effective February 12, 2008), available at: http://www.nerc.com/docs/standards/rs/Glossary_12Feb08.pdf.*

available; (2) the procedure and assumptions for establishing capacity benefit margin for each available transfer capability path or flowgate; and (3) the procedure for a load-serving entity or balancing authority to use transmission capacity set aside as capacity benefit margin, including the manner in which the transmission service provider will manage situations where the requested use of capacity benefit margin exceeds the amount of capacity benefit margin available.

29. Requirement R2 requires the transmission service provider to make its current capacity benefit margin implementation document available to the transmission operators, transmission service providers, reliability coordinators, transmission planners, resource planners, and planning coordinators that are within or adjacent to the transmission service provider's area, and to the load-serving entities and balancing authorities within the transmission service providers area, and notify those entities of any changes to the capacity benefit margin implementation document prior to the effective date of the change.

30. Requirements R3 and R4 require each load-serving entity and resource planner determining the need for transmission capacity to be set aside as capacity benefit margin for imports into a balancing authority to develop that need by using one or more of the following to determine the generation capability import requirement: [33] loss of load expectation studies, loss of load probability studies, deterministic risk-analysis studies, and reserve margin or resource adequacy requirements established by other entities, such as municipalities, state commissions, regional transmission organizations, independent system operators, regional reliability organizations, or regional entities.

31. Requirement R5 requires the transmission service provider to establish at least every 13 months a capacity benefit margin value for each available transfer capability path or flowgate to be used for available transfer capability or available flowgate capability during the 13 full calendar months (months 2–14) following the current month (the month in which the transmission service provider is establishing the capacity benefit margin values). Similarly, Requirement R6 requires the transmission planner to establish a capacity benefit margin value for each available transfer capability path or flowgate to be used in planning during each of the full calendar years two through ten following the current year (the year in which the transmission planner is establishing the capacity benefit margin values). All values must reflect consideration of each of the following, if available: (1) Any studies performed by load-serving entities or resource planners pursuant to Requirement R3 for loads within the transmission service provider's area; or (2) any reserve margin or resource adequacy requirements for loads within the transmission service provider's area established by other entities, such as municipalities, state commissions, regional transmission organizations, independent system operators, regional reliability organizations, or regional entities. Once determined, the capacity benefit margin values will be allocated along available transfer capability paths based on the expected import paths or source regions provided by load-serving entities or resource planners. Capacity Benefit Margin values for flowgates will be allocated based on the expected import paths or source regions provided by load-serving entities or resource planners and the distribution factors associated with those paths or regions, as determined by the transmission service provider.

32. Requirements R7 and R8 require the transmission service provider and the transmission planner to notify, within 31 calendar days after the establishment of capacity benefit margin, all load-serving entities and resource planners that determined they had a need for capacity benefit margin of the amount, or the amount planned, of capacity benefit margin set aside.

33. Requirement R9 requires the transmission service provider that maintains capacity benefit margin and the transmission planner to provide, subject to confidentiality and security requirements, copies of the applicable supporting data, including any models, used for determining capacity benefit margin or allocating capacity benefit margin over each available transfer capability path or flowgate to each of the associated transmission operators and to any transmission service provider, reliability coordinator, transmission planner, resource planner, or planning coordinator within 30 calendar days of their making a request for the data.

34. Requirement R10 requires the load-serving entity or balancing authority to request to import energy over firm transfer capability set aside as capacity benefit margin only when experiencing a declared level 2 or higher NERC energy emergency alert.

35. When reviewing an arranged interchange using capacity benefit margin, Requirement R11 requires all balancing authorities and transmission service providers to waive, within the bounds of reliable operation, any real-time timing and ramping requirements.

36. Requirement R12 requires all transmission service providers maintaining capacity benefit margin to approve, within the bounds of reliable operation, any arranged interchange using capacity benefit margin that is submitted by an ''energy deficient entity'' [34] under an energy emergency alert level 2 if the capacity benefit margin is available, the emergency is declared within the balancing authority area of the energy deficient entity, and the load of the energy deficient entity is located within the transmission service provider's area.

37. NERC states that the proposed Reliability Standard complies with the requirements of Order No. 890 and related directives of Order No. 693 because it sets standards that allow load-serving entities to request transfer capability to be set aside in the form of capacity benefit margin in a consistent and transparent manner. Consistent with the Commission's direction, the Reliability Standard provides an approach for determining capacity benefit margin that is flexible and does not mandate a particular methodology.[35] NERC contends that this is appropriate because various parts of the country have already developed robust methodologies for determining capacity benefit margin. NERC states that Requirements R3 and R4 allow load-serving entities or resource planners to perform specific studies to determine their need for capacity benefit margin. By specifying the types of studies load-serving entities or resource planners must perform, NERC contends that MOD–004–1 ensures that capacity benefit margin and transmission reliability margin are not used for the same purpose.[36] In response to the Commission's transparency requirement,[37] NERC states that Requirement R9 ensures that capacity benefit margin studies are made available to the appropriate reliability entities for their review and

[33] NERC defines the generation capability import requirement as the amount of generation capability from external sources identified by a load-serving entity or resource planner to meet its generation reliability or resource adequacy requirement as an alternative to internal resources.

[34] Energy deficient entities are defined by NERC in the Capacity and Energy Emergencies Reliability Standard. *See* EOP–002–2, Attachment 1.

[35] *Citing* Order No. 693, FERC Stats. & Regs. ¶ 31,242 at P 1078; *see also* Order No. 890, FERC Stats. & Regs. ¶ 31,241 at P 257.

[36] *Citing* Order No. 693, FERC Stats. & Regs. ¶ 31,242 at P 1105.

[37] *Citing id.* P 1077.

analysis. With regard to public disclosure, NERC states that it has agreed with NAESB that requirements for posting information are more appropriately addressed through the NAESB process.

38. Requirements R5 and R6 require that the transmission service provider and transmission planner utilize the information contained in the studies if it has been provided to them when establishing capacity benefit margin values and mandate the re-evaluation of capacity benefit margin at least once every thirteen months.[38] NERC states that, consistent with Order Nos. 890 and 693, Requirements R5 and R6 also require allocation of capacity benefit margin based on the available transfer methodology chosen under MOD–001–1.[39] NERC states that Requirements R10, R11 and R12 specify the manner in which capacity benefit margin is to be used.[40] NERC states that any additional requirements specified by the transmission service provider must be identified in the capacity benefit margin implementation document, as mandated in Requirement R1.3.

39. In response to the requirement that capacity benefit margins be verifiable,[41] NERC states that Requirements R5, R6 and R9 ensure that the studies used to establish a need for capacity benefit margin are made available to any of the reliability entities specified in Requirement R9 that request them. NERC explains that the Reliability Standard does not mandate the verification of requested amounts of capacity benefit margin because it would place a functional entity (either the transmission service provider or transmission planner) in the position of having to judge the quality of each request, which could create conflicts of interest or potentially result in liability for that entity. Rather than mandate any particular approach for validation, NERC states that Requirements R3 and R4 mandate the specific kinds of studies to be performed and supporting information that is to be maintained when determining the underlying need for capacity benefit margin. To the extent that entities do not use these methods or maintain this supporting information, NERC states that they will be in violation of the Reliability Standard.

40. In response to the Commission's call for clarity in the process for requesting capacity benefit margin,[42] NERC states that Requirement R1.1 requires the transmission service provider explain the process by which load-serving entities and resource planners may ensure that their need for transmission capacity to be set aside as capacity benefit margin is reviewed and accommodated by the transmission service provider to the extent transmission capacity is available. Requirement R1.3 requires the transmission service provider to describe the procedure for load-serving entities and resource planners to use transmission capacity that has been set aside as capacity benefit margin. If the requested use of capacity benefit margin exceeds the amount of capacity benefit margin available, Requirement R1.3 also requires a description of how the transmission service provider will manage such situations. In addition, NERC states that Requirements R7 and R8 mandate that the transmission service provider notify load-serving entities and resource planners that determined they had a need for capacity benefit margin of the amount of capacity benefit margin set aside, so that they may make informed decisions about how to proceed if their full request for capacity benefit margin could not be accommodated.

D. Transmission Reliability Margin Methodology, MOD–008–1

41. As proposed, the Transmission Reliability Margin Methodology Reliability Standard (MOD–008–1) provides for the calculation of transmission reliability margin, which describes the reliability aspects of determining and maintaining a transmission reliability margin and the components of uncertainty that may be considered when making that determination. The purpose of this Reliability Standard is to promote the consistent and reliable calculation, verification, preservation, and use of transmission reliability margin to support analysis and system operations. Transmission reliability margin is transmission transfer capability set aside to mitigate risks to operations, such as deviations in dispatch, load forecast, outages, and similar such conditions. It is distinctly different from capacity benefit margin, which is transmission transfer capability set aside to allow for the import of generation upon the occurrence of a generation capacity deficiency.

42. NERC proposes to apply MOD–008–1 only to transmission operators that have elected to keep a transmission reliability margin. As discussed more fully in the discussion section below, NERC states that the Reliability Standard does not specify one approach for calculating transmission reliability margin, but rather improves transparency by providing the key requirements and items that must be contained in any transmission reliability margin methodology.[43]

43. To improve the transparency of transmission reliability margin calculations, the proposed Reliability Standard imposes five requirements on transmission service providers electing to keep a transmission reliability margin. Requirement R1 provides that a transmission operator must keep a transmission reliability margin implementation document that explains how specific risks such as aggregate load forecast uncertainty, load distribution uncertainty, and forecast uncertainty in transmission system topology[44] are accounted for in the transmission reliability margin, how transmission reliability margin is allocated, and how transmission reliability margin is determined for various time frames.

44. Requirement R2 allows a transmission operator to account only for the risks identified in Requirement R1 in transmission reliability margin, and prohibits the transmission operator from incorporating risks that are addressed in capacity benefit margin.[45] It allows reserve sharing to be included in transmission reliability margin.

45. Requirement R3 requires each applicable entity to make the transmission reliability margin implementation document and associated information available to the following reliability entities if requested: Transmission service provider, reliability coordinator, planning coordinator, transmission planner, and transmission operator.

[38] *Citing* Order No. 890, FERC Stats. & Regs. ¶ 31,241 at P 358. NERC states that it chose thirteen months to ensure enough flexibility for a yearly update without being so prescriptive as to require it on a specific day.

[39] *Citing id.* at P 257; Order No. 693, FERC Stats. & Regs. ¶ 31,242 at P 1082.

[40] *Citing* Order No. 890, FERC Stats. & Regs. ¶ 31,241 at P 256–7.

[41] Order No. 693, FERC Stats. & Regs. ¶ 31,242 at P 1077.

[42] *Id.* P 1081.

[43] NERC August 29, 2008 Filing, Docket No. RM08–19–000 at 38 (NERC Filing).

[44] This includes, but is not limited to, forced or unplanned outages and maintenance outages; allowances for parallel path (loop flow) impacts; allowances for simultaneous path interactions; variations in generation dispatch (including, but not limited to, forced or unplanned outages, maintenance outages and location of future generation); short-term system operator response (operating reserve actions); reserve sharing requirements; and inertial response and frequency bias.

[45] The capacity benefit margin Reliability Standard, MOD–004–1, was filed on November 21, 2008 in Docket No. RM09–5-000.

46. Requirement R4 provides that each applicable transmission operator must determine the transmission reliability margin value per the methods described in the transmission reliability margin implementation document at least once every thirteen months. Finally, Requirement R5 states that each applicable transmission operator must provide that transmission reliability margin value to its transmission service providers and transmission planners no more than seven days after it has been determined.

47. NERC states that MOD–008–1 complies with Order No. 890 by specifying the critical areas of analysis required for transmission reliability margin.[46] Further, it states that it has specified the appropriate uses of transmission reliability margin in Requirement R1 and prohibited the use of other values and double counting in Requirement R1. In addition, it maintains that MOD–008–1 complies with Order No. 693 by imposing clear requirements for making documents supporting the transmission reliability margin determination available through Requirements R1 and R3.

48. In response to the requirement to expand the applicability of the transmission reliability margin Reliability Standard to planning authorities and reliability coordinators,[47] NERC states that the drafting team was not able to identify any requirements for these entities, based on the current drafting of the Reliability Standard. Therefore, these entities are not included in the proposed Reliability Standard. NERC states that, until such time as the transmission reliability margin methodology becomes more detailed, there does not seem to be any measurable action that can be imposed on the planning coordinator[48] or reliability coordinator.

49. In response to the Commission's statement that it would not require transfer capability that is set aside as transmission reliability margin to be sold on a non-firm basis,[49] NERC states that it has included this requirement in each of the three methodologies as a part of firm and non-firm equations. NERC states that, because some of the uncertainties included in the transmission reliability margin may reduce or be eliminated as one approaches real time, the non-firm equations allow for the partial release of transmission reliability margin. In the Area Interchange Methodology (MOD–028–1), this is addressed in Requirement R11; in the Rated System Path Methodology (MOD–029–1), this is addressed in Requirement R8; and in the Flowgate Methodology (MOD–030–2), this is addressed in Requirement R9.

50. NERC contends that choosing a ''best'' approach to transmission reliability margin calculation would require a much more thorough technical effort. NERC therefore requests that the Commission provide additional guidance on this topic regarding its priority and a determination whether or not such an effort should be included in NERC's annual planning process.

E. Three Methodologies for Calculating Available Transfer Capability

51. In Order No. 890, the Commission did not require a uniform methodology for calculating available transfer capability. The Commission noted that NERC was developing Reliability Standards for three available transfer capability calculation methodologies and concluded that, if all of the available transfer capability components and certain data inputs and assumptions are consistent, the three available transfer capability calculation methodologies being developed by NERC will produce predictable and sufficiently accurate, consistent, equivalent and replicable results.[50] Consistent with Order No. 890, NERC proposes three methodologies for calculating available transfer capability as detailed in the following Reliability Standards: MOD–028–1, MOD–029–1 and MOD–030–2. NERC contends that these three methodologies meet the requirements established by the Commission in Order No. 890, as well as those established in Order No. 693.

52. NERC asserts that the three methodologies are a significant improvement over the existing available transfer capability related requirements. While current MOD–001–0 is essentially a ''fill-in-the-blank'' Reliability Standard,[51] the proposed methodologies replace the original fill-in-the-blank standard by specifying in detail how total transfer capability is to be determined—from modeling requirements, to the simulation of dispatch to determine native load impacts, to the treatment of reservations and to the incorporation of neighboring data. According to NERC, MOD–001–1 specifies how existing transmission commitments and available transfer capability are to be determined in detail and clearly describes the treatment of capacity benefit margin and transmission reliability margin in the available transfer capability equations. Thus, NERC contends, these Reliability Standards reduce the potential for seams discrepancies and improve the wide-area understanding of the Bulk-Power System on a forward-looking basis. NERC states that, by promoting consistency, standardization and transparency, they directly support and improve the reliability of the Bulk-Power System and help achieve the Commission's objectives stated in Order No. 890.

1. Area Interchange Methodology, MOD–028–1

53. NERC states that the area interchange methodology is characterized by determination of incremental transfer capability via simulation, from which total transfer capability can be mathematically derived. Capacity benefit margin, transmission reliability margin, and existing transmission commitments are subtracted from the total transfer capability, and postbacks and counterflows are added, to derive available transfer capability. NERC also states that, under the area interchange methodology, total transfer capability results are generally reported on an area to area basis.

54. MOD–028–1 describes the area interchange methodology (previously referred to as the network response available transfer capability methodology) for determining available transfer capability. NERC intends to use the Area Interchange Methodology Reliability Standard to increase consistency and reliability in the development and documentation of transfer capability calculation for short-term use performed by entities using the area interchange methodology to support analysis and system operations.

55. This Reliability Standard would apply only to transmission operators and transmission service providers that

[46] NERC Filing at 32 (*citing* Order No. 890, FERC Stats. & Regs. ¶ 31,241 at P 273).

[47] Order No. 693, FERC Stats. & Regs. ¶ 31,242 at P 1126.

[48] The Commission notes that NERC uses the terms planning coordinator and planning authority interchangeably in its standards, as indicated in the proposed additions to the glossary of terms, addressed below. The interchangeable use of these terms may lack the clarity generally preferred, but the Commission understands that NERC is currently working on modifications to address this issue.

[49] *See* Order No. 890, FERC Stats. & Regs. ¶ 31,241 at P 273.

[50] *Id.* P 210.

[51] A fill-in-the-blank Reliability Standard requires the regional entities to develop criteria for use by users, owners or operators within each region. In Order No. 693, the Commission held 24 Reliability Standards (mainly fill-in-the-blank standards) as pending until further information was provided on each standard and requires users, owners and operators to follow these pending standards as ''good utility practice'' pending their approval by the Commission.

have elected to implement this particular methodology as part of their compliance with MOD–001–1, Requirement R1. The proposed Reliability Standard consists of eleven requirements. Requirement R1 provides the additional information that a transmission service provider using the area interchange methodology must include in its available transfer capability implementation document. This includes information describing how the selected methodology has been implemented, in such detail that, given the same information used by the transmission operator, the results of the total transfer capability calculations can be validated; a description of the manner in which the transmission operator will account for interchange schedules in the calculation of total transfer capability; any contractual obligations for allocation of total transfer capability; a description of the manner in which contingencies are identified for use in the total transfer capability process; and information on how sources and sinks for transmission service are accounted for in available transfer capability calculations.

56. Pursuant to Requirement R2, each transmission operator must calculate total transfer capability using a model that meets the scope specified in the requirement and includes rating information specified by generator owners and transmission owners whose equipment is represented in the model.

57. Requirement R3 details the information the transmission operator must include in its determination of total transfer capability for the on-peak and off-peak intra-day and next day time periods, as well as days two through 31 and for months two through 13.[52] Requirement R4 requires each transmission operator to determine total transfer capability while modeling contingencies and reservations consistently, and respect any contractual allocations of total transfer capability.

58. Requirement R5 provides that each transmission operator must determine total transfer capability on a periodic basis (as specified in the requirement) or upon certain operating conditions significantly affecting bulk electric system topology.

59. Requirement R6 provides the detailed process by which each transmission operator must establish total transfer capability, which must be provided to the transmission service provider within the time frames specified in Requirement R7.

60. Requirements R8 through R11 specify the formulas and detailed specifications of the variables for calculating firm and non-firm existing transmission commitments and firm and non-firm available transfer capability.

2. Rated System Path Methodology, MOD–029–1

61. NERC states that the rated system path methodology is characterized by an initial total transfer capability, determined via simulation. As with the area interchange methodology, capacity benefit margin, transmission reliability margin, and existing transmission commitments are subtracted from the total transfer capability, and postbacks and counterflows are added, to derive available transfer capability. NERC also states that, under the rated system path methodology, total transfer capability results are generally reported as specific transmission path capabilities.

62. MOD–029–1 describes the rated system path methodology for determining available transfer capability. NERC intends to use this Reliability Standard to increase consistency and reliability in the development and documentation of transfer capability calculations for short-term use performed by entities using the rated system path methodology to support analysis and system operations.

63. This Reliability Standard would apply only to transmission operators and transmission service providers that have elected to implement rated system path methodology as part of their compliance with MOD–001–1 Requirement R1. To implement this calculation, this Reliability Standard consists of eight requirements. Under Requirement R1, a transmission operator must calculate total transfer capability using a model that meets the scope and criteria specified in the requirement. Requirement R2 lists a detailed process by which the transmission operator must establish total transfer capability. Pursuant to Requirement R3, the transmission operator must establish total transfer capability as the lesser of the system operating limit or the value determined in Requirement R2. The transmission operator must then provide a transmission service provider with the appropriate total transfer capability values and study report within seven days of finalization of the study report required in Requirement R4.

64. Requirements R5 through R8 provide that each applicable transmission service provider must calculate firm and non-firm existing transmission commitments and firm and non-firm available transfer capability using a specified formula and detailed specification of the variables.

3. Flowgate Methodology, MOD–030–2

65. NERC states that the flowgate methodology is characterized by identification of key facilities as flowgates. Total flowgate capabilities are determined based on facility ratings and voltage and stability limits. The impacts of existing transmission commitments are determined by simulation. To determine the available flowgate commitments, the transmission service provider or operator must subtract the impacts of existing transmission commitments, capacity benefit margin, and transmission reliability margin, and add the impacts of postbacks and counterflows. Available flowgate capability can be used to determine available transfer capability.

66. MOD–030–2 describes the flowgate methodology (previously referred to as the flowgate network response available transfer capability methodology) for determining available transfer capability. NERC states that the purpose of the Flowgate Methodology Reliability Standard is to increase consistency and reliability in the development and documentation of transfer capability calculations for short-term use performed by entities using the flowgate methodology to support analysis and system operations.

67. This Reliability Standard would apply only to transmission operators and transmission service providers that have elected to implement this particular methodology as part of their compliance with MOD–001–2. As proposed, the Flowgate Methodology consists of eleven requirements. Requirement R1 states that a transmission service provider implementing this methodology must include the following information in its available transfer capability implementation document in addition to that already required in the Available Transmission System Capability Reliability Standard (MOD–001–1): the criteria used by the transmission operator to identify sets of transmission facilities as flowgates that are to be considered in available flowgate capability calculations, and information on how sources and sinks for transmission service are accounted for in available flowgate capability calculations.

68. Under Requirement R2, each applicable transmission operator must determine and manage the flowgates used in the methodology based on the criteria listed in the requirement,

[52] This information includes: Expected generation and transmission outages, additions, and retirements; load forecasts; and unit commitment and dispatch order.

establish its total flowgate capability based on the criteria listed in the requirement, and provide total flowgate capability to the transmission service provider within seven days of their determination.[53] To achieve consistency in each component of the available transfer capability calculation, the Commission, in Order No. 890, directed public utilities, working through NERC, to develop an available flowgate capability definition and requirements used to identify a particular set of transmission facilities in a flowgate.[54] As part of the development of the Flowgate Methodology, NERC states that the Reliability Standard drafting team developed a definition of available flowgate capability. In addition, NERC states that Requirement R2 of this Reliability Standard contains a list of minimum characteristics that are to be used to identify a particular set of transmission facilities as a flowgate.

69. Requirement R3 requires the transmission operator to provide the transmission service provider with a transmission model that meets a specified criteria and Requirement R4 provides that the transmission service provider must evaluate reservations consistently when determining available flowgate capability. When determining available flowgate capability, Requirement R5 provides that each transmission service provider must use the models given to it as described in Requirement R3, include appropriate outages, and use the available flowgate capability on external flowgates as provided by the transmission service provider calculating available flowgate capability for those flowgates.

70. Requirements R6 and R7 require each transmission service provider to calculate the impact of firm and non-firm existing transmission commitments using a specified process. The transmission service provider must calculate firm and non-firm available flowgate capability using the formula and detailed specification of the variables found in Requirements R8 and R9.

71. Under Requirement R10, each transmission service provider shall recalculate available flowgate capability at a certain specified interval (hourly once per hour, daily once per day, monthly once per week) unless the input values specified in the available flowgate capability calculation have not changed. NERC contends that this requirement satisfies the requirement in Order No. 890 and Order No. 693 that transmission service providers recalculate available transfer capability on a consistent time interval. Finally, Requirement R11 provides the formula and variables that a transmission service provider must use if it desires to convert available flowgate capability to available transfer capability.[55]

F. Implementation Plan

72. NERC proposes that the Available Transmission System Capability Reliability Standard and the three methodology Reliability Standards become effective the first day of the first quarter no sooner than one calendar year after approval of all of these four Reliability Standards by all appropriate regulatory authorities where approval is required or is otherwise effective in those jurisdictions where approval is not explicitly required. According to NERC, since the three methodology Reliability Standards require information from neighboring reliability entities for use in the development of its available transfer capability and available flowgate capability values that is compulsory under Requirement R9 of the Available Transmission System Capability Reliability Standard (MOD–001–1), none of the methodology Reliability Standards can be effectively implemented unless and until that Reliability Standard has been implemented by all entities in all jurisdictions.

73. NERC states that, although some entities may already be implementing the requirements in the Reliability Standards, many others are not, especially with regard to the data exchange requirements listed in Requirement R9 of MOD–001–1. Accordingly, software changes, associated testing, and possible tariff filings will be required to comply with the proposed Reliability Standards. Therefore, NERC maintains that a minimum of one year from regulatory approval should be allowed for entities to comply.

74. NERC proposes that each of the Capacity Benefit Margin (MOD–004–1) and Transmission Reliability Margin (MOD–008–1) Reliability Standards require compliance on the first day of the first quarter no sooner than one calendar year after approval of the Reliability Standard by appropriate regulatory authorities where approval is required or, where approval is not explicitly required, when the Reliability Standard is otherwise effective. According to NERC, unlike the other four proposed Reliability Standards included in this filing, the Transmission Reliability Margin Reliability Standard replaces the existing Reliability Standard MOD–008–0 and the Capacity Benefit Margin Reliability Standard replaces MOD–004–0. As such, they do not require coordinated implementation, as entities may rely on the previous version of the Reliability Standards if any delay in implementing the Reliability Standards occurs. NERC states that, although many entities already use transmission reliability margin and capacity benefit margin, compliance with these Reliability Standards may require software changes, software regression testing, and possible tariff changes. To accommodate these needs, NERC believes a one-year implementation period is appropriate.

III. Discussion

75. The Commission proposes to approve the revised MOD Reliability Standards and related additions to the glossary of terms, to be effective as proposed by NERC, as just, reasonable, not unduly discriminatory or preferential, and in the public interest. These Reliability Standards represent a step forward in eliminating the broad discretion previously afforded transmission service providers in the calculation of available transfer capability. As the Commission explained in Order No. 890, excessive discretion in the calculation of available transfer capability gives transmission service providers the opportunity to discriminate in subtle ways in the provision of open access transmission service.[56] On systems where transmission capacity is constrained, a lack of transparency and consistency in the calculation of available transfer capability has led to recurring disputes over whether transmission service providers have performed those

[53] MOD–030–2 is identical to MOD–030–1 except for certain modifications to Requirements R2 and R11. First, NERC added new sub-requirements R2.1.1.3 and R2.1.2.3. to clarify that, if any limiting element is kept within its limit for its associated worst contingency by operating within the limits of another flowgate, then no new flowgate needs to be established for such limiting elements or contingencies. Second, NERC modified sub-requirement R2.1.3. to state that the list of flowgates does not need to include any flowgates created to address temporary operating conditions. Finally, NERC modified Requirement R11 to eliminate the obligation to convert total flowgate capability to total transfer capability. The Commission notes that the modification to Requirement R11 does not alter the posting requirements of 18 CFR 37.6(b)(3).

[54] Order No. 890, FERC Stats. & Regs. ¶ 31,241 at P 313.

[55] Requirement R11 of MOD–030–1 would have directed transmission service providers to use the same formula to convert total flowgate capability to total transfer capability. The formula provided in Requirement R11 of MOD–030–2 eliminates this obligation. As noted above, this modification does not alter the posting requirements of 18 CFR 37.6(b)(3).

[56] Order No. 890, FERC Stats. & Regs. ¶ 31,241 at P 68.

calculations in a way that discriminates against competitors.

76. The Commission acted in Order No. 890 to limit this remaining opportunity for discrimination by directing public utilities, working through NERC, to develop Reliability Standards to govern the consistent and transparent calculation of available transfer capability by transmission service providers. In Order No. 693, the Commission implemented that directive by requiring NERC to prospectively modify the MOD Reliability Standards it filed in April 2006 to address the requirements of Order No. 890. The proposed Reliability Standards satisfy these requirements by enhancing transparency and consistency in the calculation of available transfer capability, mandating that transmission service providers and transmission operators perform their calculations in accordance with methodologies that are both explicitly documented and available to reliability entities who request them. The proposed Reliability Standards also require documentation of the detailed representations of the various components that comprise the available transfer capability equation, and require transmission service providers and transmission operators to specify modeling and risk assumptions and disclosure of outage processing rules to other reliability entities. These actions will make the processes to calculate available transfer capability and its various components more transparent which, in turn, will allow the Commission and others to ensure that those calculations are performed consistently.

77. Although the Commission believes that the proposed Reliability Standards generally comply with the requirements of Order No. 890 and related directives of Order No. 693, the Commission is concerned that the implementation documents used by each transmission service provider to implement the Reliability Standards could provide continuing opportunities to discriminate in the provision of transmission service. As discussed in further detail below, the Commission proposes to direct the ERO to perform an audit of the implementation documents to determine if they provide sufficient transparency to enable the Commission and others to replicate and verify each transmission service provider's calculations. Without adequate transparency, it will be impossible for the Commission to ensure that transmission service providers are consistently performing their available transfer capability calculations when responding to requests for transmission service. Ensuring adequate transparency also will enable the Commission and others to verify that data and modeling assumptions used to calculate available transfer capability are being used consistently during relevant timeframes, such as in the calculation of short-term available transfer capability and the planning of operations, as required by the proposed Reliability Standards.[57]

78. The Commission also has concern regarding several of the substantive requirements of the proposed Reliability Standards. To address these concerns, the Commission proposes to direct the ERO to develop modifications to the Reliability Standards to address the discrete issues involving: the availability of each transmission service provider's implementation documents; the consistent treatment of assumptions in the calculation of available transfer capability; the calculation, allocation, and use of capacity benefit margin; the calculation of total transfer capability under the Rated System Path Methodology; and, the treatment of network resource designations in the calculation of available transfer capability.

79. Finally, we note that the Commission in this proceeding addresses only those revisions to the Reliability Standards filed to comply with the available transfer capability-related requirements of Order No. 890, as implemented by Order No. 693. In Order No. 693, the Commission also directed the ERO to develop modifications to a number of other Reliability Standards. The Commission expects the ERO to comply in a timely and complete manner with those directives, to the extent it has not already done so.

A. Implementation of the Reliability Standards

80. The Available Transmission System Capability Reliability Standard (MOD–001–1) serves as an ''umbrella'' Reliability Standard that requires each applicable entity to select and implement one or more of the three available transfer capability methodologies found in MOD–028–1, MOD–029–1, or MOD–030–2. MOD–004–1 and MOD–008–1 provide for the calculation of capacity benefit margin and transmission reliability margin, which are inputs into the available transfer capability calculation. Together, these Reliability Standards require transmission service providers and transmission operators to prepare and keep current implementation documents that contain certain information specified in the Reliability Standards. The available transfer capability implementation documents must describe the available transfer capability methodology in such detail that the results of their calculations can be validated when given the same information used by the transmission service provider or transmission operator.[58]

81. The Commission is concerned that the proposed Reliability Standards could be implemented by a particular transmission service provider or transmission operator in a way that enables them to retain the ability to unduly discriminate in the provision of open access transmission service. Although the Reliability Standards require transmission service providers to include certain minimum information in each of the implementation documents, transmission service providers are also permitted to include additional, undefined parameters and assumptions in those documents. This could include criteria that are themselves not sufficiently transparent to allow the Commission and others to determine whether they have been consistently applied by the transmission service provider in particular circumstances. This discretion appears in the three available transfer capability methodologies (MOD–028–1, MOD029–1, and MOD–030–2), as well as the Reliability Standards governing the calculation of capacity benefit margin (MOD–004–1) and transmission reliability margin (MOD–008–1).

82. It is appropriate for transmission service providers to retain some level of discretion in the calculation of available transfer capability. Requiring absolute uniformity in criteria and assumptions across all transmission service providers would preclude transmission service providers from calculating available transfer capability in a way that accommodates the operation of their particular systems. The Reliability Standards need not be so specific that they address every unique system difference or differences in risk assumptions when modeling expected flows. Each transmission service provider should retain some discretion to reflect unique system conditions or modeling assumptions in its available transmission capability methodology.[59] Any such system conditions or modeling assumptions, however, must be made sufficiently transparent and be

[57] MOD–001–1, Requirements R6 and R7.

[58] MOD–001–1, Requirement R3.

[59] Order No. 890–A, FERC Stats. & Regs. ¶ 31,261 at P 51.

implemented consistently for all transmission customers.

83. In order to ensure that this occurs, the Commission proposes to direct the ERO to conduct an audit of the various implementation documents developed by transmission service providers to confirm that the complete available transfer capability methodologies reflected therein, including the calculation of each component of available transfer capability, are sufficiently transparent to allow the Commission and others to replicate and verify those calculations and thereby ensure that they are being implemented consistently for all transmission customers. This audit would review the additional parameters and assumptions included by transmission service providers in their implementation documents as of the date the Reliability Standards become effective, analyzing all parameters and assumptions to determine if they are detailed enough to enable replication and verification of calculations. Upon review of this analysis, the Commission may direct the ERO to develop a modification to one or more of the Reliability Standards to address any lack of transparency that may exist in the calculation of available transfer capability and each of its components.

84. The Commission proposes to direct the ERO to complete this audit no later than 180 days after the effective date of the Reliability Standards, as approved by a final rule in this docket.[60] The Commission also proposes to direct NERC to submit a timeline for the completion of this audit within 30 days of the issuance of the final rule in this docket. The Commission discusses below the specific issues to be analyzed by NERC in its audit.

85. Before turning to those issues, the Commission reiterates that our intent is not to require the development of a single, uniform methodology for calculating available transfer capability or its components. In Order No. 890, the Commission found that the potential for discrimination does not lie primarily in the choice of an available transfer capability calculation methodology, but rather in the consistent application of its components.[61] The Commission acknowledged that NERC was developing standards for three available transfer capability calculation methodologies. The Commission concluded that, if all of the available transfer capability components and certain data inputs and assumptions are consistent, the three available transfer capability calculation methodologies being developed by NERC would produce predictable and sufficiently accurate, consistent, equivalent and replicable results.[62]

86. As the Commission explains in Order No. 890–C, issued concurrently with this order, this does not mean that the results of available transfer capability calculations on either side of an interface must be identical in every instance. There are fundamental differences in the three available transfer capability methodologies set forth in the proposed Reliability Standards that may keep them from producing identical results. Even where the same methodology is used by transmission service providers on either side of an interface, unique system differences or differences in risk assumptions can lead to variations in available transfer capability values. The central goal of the available transfer capability reforms adopted in Order No. 890 was to limit remaining opportunities for discrimination by requiring each transmission service provider's available capability transfer methodology to be sufficiently transparent to allow for independent validation that it has been consistently applied. Subject to confirmation by NERC through its audit, the Commission believes that the Reliability Standards will provide the necessary level of transparency and, therefore, the results of available transfer capability calculations will be sufficiently accurate, consistent, equivalent and replicable.

1. Available Transfer Capability Implementation Documents

87. First, the Commission proposes to direct the ERO to study whether each available transfer capability implementation document developed by each transmission service provider under the Reliability Standards contains a level of specificity sufficient to allow the Commission and others to replicate and verify calculations of available transfer capability and available flowgate capability. Although MOD–028–1, MOD–029–1, and MOD–030–2 each improves transparency and consistency by requiring transmission service providers to use certain specified data and variables in their calculations, they also allow transmission service providers to use additional parameters and assumptions as long as they are specified in their implementation documents. Other than their inclusion in the available transfer capability implementation document, there do not appear to be any appreciable factors limiting a transmission service provider's discretion to use particular parameters and assumptions.

88. For example, in the Area Interchange Methodology (MOD–028–1), Requirement R3.1 establishes variables to be used when calculating on-peak and off-peak intra-day and next-day total transfer capabilities. The requirement also allows transmission operators to use ''any other values and additional parameters as specified in the [available transfer capability implementation document].''[63] The requirement does not provide any further limitation on the other values and additional parameters. Thus, although the requirement promotes transparency and consistency, it could allow an entity to adopt values and parameters that are not sufficiently transparent to ensure that the transmission service provider is not discriminating in the provision of transmission service through its calculation of available transfer capability.

89. Similarly, Requirement R1 of the Rated System Path Methodology (MOD–029–1) requires a transmission operator, when calculating total transfer capabilities for available transfer capability, to use a transmission model that meets the criteria set forth in the sub-requirements. Requirement R1.1.9 allows a transmission operator to use a model that ''models series compensation for each line at the expected operating level unless specified otherwise in the [available transfer capability implementation document].''[64] Requirement R1.1.10 allows a transmission operator to use a model that ''includes any other modeling requirements or criteria specified in the [available transfer capability implementation document].''[65]

90. The same unrestrained discretion is found in the Flowgate Methodology (MOD–030–2). Requirement R2.1 requires transmission operators to include flowgates used in the available flowgate capability based, at a minimum, on specified criteria. This criteria includes, at Requirement R2.1.3, any limiting element/contingency combination at least within the transmission model identified in

[60] The audit should be prepared and submitted by NERC staff (or any consultants it may choose to employ), rather than the drafting teams that developed the proposed Reliability Standards.

[61] Order No. 890, FERC Stats. & Regs. ¶ 31,241 at P 208.

[62] *Id.* P 210.

[63] MOD–028–1, Requirement R3.1.

[64] MOD–029–1, Requirement R1.1.9.

[65] MOD–029–1, Requirement R1.1.10.

Requirement R3.4[66] and R3.5[67] that has been subjected to an interconnection-wide congestion management procedure within the last 12 months, unless the limiting element/contingency combination is accounted for using another available transmission capability methodology. Requirement R2.1.4 allows transmission operators to consider any limiting element/contingency combination within the transmission model that has been requested to be included by any other transmission service provider using the flowgate methodology or area interchange methodology under certain circumstances.

91. In Order No. 890, the Commission expressed particular concern regarding consistency in the use of counterflow assumptions in short-term and long-term calculations of available transfer capability.[68] The Reliability Standards achieve consistency by requiring each transmission service provider to identify in its available transfer capability implementation document how it accounts for counterflows and to calculate available transfer capability using assumptions no more limiting than those used in the planning of operations for the corresponding time period.[69] However, the Reliability Standards again place no limit on the parameters the transmission service provider can use to account for counterflows. Under MOD–028–1, MOD–029–1, and MOD–030–2, transmission service providers are permitted to make adjustments to available transfer capability or available flowgate capability to reflect counterflows so long as such adjustments are allowed under the counterflow methodology identified in the available transfer capability implementation document.[70]

92. The Commission also expressed concern in Order No. 890 regarding the treatment of reservations with the same point of receipt (generator), but multiple points of delivery (load), in setting aside existing transmission capacity.[71] The Commission found that such reservations should not be modeled in the existing transmission commitments calculation simultaneously if their combined reserved transmission capacity exceeds the generator's nameplate capacity at the point of receipt. The Commission required the development of Reliability Standards that lay out clear instructions on how these reservations should be accounted for by the transmission service provider. The proposed Reliability Standards achieve this by requiring transmission service providers to identify in their implementation documents how they have implemented MOD–028–1, MOD–029–1, or MOD–030–2, including the calculation of existing transmission commitments.[72] However, the Reliability Standards again place no limits on the parameters that each transmission service provider can use.

93. The proposed Reliability Standards thus provide each transmission service provider with substantial discretion when implementing various aspects of its available transfer capability methodology. The Commission recognizes that there are aspects of calculations that require the use of parameters and assumptions tailored to the particular needs of a transmission service provider. In certain instances, however, this discretion could be used by a transmission service provider to include criteria that allow for discrimination in the provision of transmission service through inconsistent calculation of available transfer capability. For example, the use of parameters, modeling requirements, criteria, or assumptions that are undefined or ''black box'' in nature would provide the transmission service provider with the opportunity and ability to vary its calculations depending on the customer seeking service. Such discretion undermines the ability of the Commission and others to replicate and verify the results of a transmission service provider's calculations.

94. In order to ensure that remaining opportunities for undue discrimination are identified and eliminated, the Commission proposes to direct the ERO to conduct a review of the additional parameters and assumptions included by each transmission service provider in its available transfer capability implementation document as of the date the Reliability Standards become effective. Based on its review, NERC would identify in the audit required above those instances in which parameters and assumptions are not sufficiently specific or transparent to allow the Commission and others to replicate and verify the results of the transmission service provider's calculation of available transfer capability or available flowgate capacity. Upon review of NERC's analysis, the Commission may direct the ERO to develop a modification to MOD–001–1 to address any lack of transparency. The Commission seeks comment whether additional requirements should be directed in this proceeding to ensure that the discretion provided under the available transfer capability implementation documents cannot be used to unduly discriminate in the provision of transmission service.

2. Capacity Benefit Margin Implementation Documents

95. Second, the Commission proposes to direct the ERO to study whether the capacity benefit margin implementation documents developed by transmission service providers under MOD–004–1 contain a level of specificity sufficient to allow the Commission and others to replicate and verify the calculation, allocation, and use of capacity benefit margin by transmission service providers. As explained above, capacity

[66] Requirement R3.4 requires the transmission operator to make available to the transmission service provider a transmission model to determine available flowgate capability that contains modeling data and system topology for the facilities within its reliability coordinator's area. Equivalent representation of radial lines and facilities 161kv or below is allowed.

[67] Requirement R3.5 requires the transmission operator to make available to the transmission service provider a transmission model to determine available flowgate capability that contains modeling data and system topology (or equivalent representation) for immediately adjacent and beyond reliability coordination areas.

[68] Order No. 890, FERC Stats. & Regs. ¶ 31,241 at P 292–93; Order 693, FERC Stats. & Regs. ¶ 31,242 at P 1039.

[69] MOD–001–1, Requirements R3.2, R7. NERC states in its filing that additional guidance from the Commission would be necessary in order to specify in greater detail a single ''best'' approach for treating counterflows. *See* NERC Filing at 101. The Commission did not require the development of a single approach for the treatment of counterflows. Rather, the Commission required the development of Reliability Standards that result in the use of counterflow assumptions for short-term and long-term available transfer capability calculations that are consistent with those used for the planning of operations and system expansion. *See* Order No. 890, FERC Stats. & Regs. ¶ 31,241 at P 292–93; Order 693, FERC Stats. & Regs. ¶ 31,242 at P 1039. The proposed Reliability Standards adequately address that requirement by directing each transmission service provider to identify in its implementation document how it will address counterflows in its calculation of available transfer capability and available flowgate capacity.

[70] MOD–028–1, Requirement R10; MOD–029–1, Requirement R7; MOD–030–2, Requirement R8.

[71] Order No. 890, FERC Stats. & Regs. ¶ 31,241 at P 245; Order 693, FERC Stats. & Regs. ¶ 31,242 at P 1033.

[72] MOD–001–1, Requirement R3.1. In its filing, NERC discusses several options should the Commission desire to impose a uniform approach regarding the treatment of reservations with the same point of receipt, but multiple points of delivery. *See* NERC Filing at 90–92. Neither Order No. 890 nor Order No. 693 directed that a single approach be adopted to account for such reservations and, instead, required only that instructions on how these reservations are accounted for by the transmission service provider be clearly laid out. *See* Order No. 890, FERC Stats. & Regs. ¶ 31,241 at P 245; Order 693, FERC Stats. & Regs. ¶ 31,242 at P 1033. The obligation of each transmission service provider to identify in its implementation document how they have implemented MOD–028–1, MOD–029–1, or MOD–030–2, including the calculation of existing transmission capacity, satisfies this requirement.

benefit margin is the amount of firm transmission capability preserved by the transmission service provider for load-serving entities, whose loads are located on that transmission service provider's system, to enable access by the load-serving entities to generation from interconnected systems to meet generation reliability requirements. As NERC explained in its filing, various entities have already developed methodologies for determining capacity benefit margin. Accordingly, NERC proposed a Reliability Standard that allows transmission service providers flexibility in choosing an appropriate methodology for calculating, allocating and using capacity benefit margins. Although MOD–004–1 specifies core elements that should be consistent among all methodologies, the transmission service provider has discretion to use any methodology to calculate, allocate, and use capacity benefit margins, provided that it is identified and described in the implementation document.

96. For example, Requirements R5.1 and R6.1 of MOD–004–1 require the transmission service provider to establish capacity benefit margin values for each path and flowgate reflecting consideration of studies provided by load-serving entities and resource planners demonstrating a need for capacity benefit margin and applicable reserve margin or resource adequacy requirements. Although Requirement R1.2 requires the transmission service provider to identify in its capacity benefit margin implementation document the procedures and assumptions for establishing these path and flowgate values, the Reliability Standard places no limitations or parameters on those procedures or assumptions. As with MOD–001–1, MOD–004–1 would permit the transmission service provider to adopt procedures and assumptions that are not sufficiently transparent to ensure that the transmission provider is similarly treating similarly-situated customers. The Commission is therefore concerned that the Reliability Standard could be implemented by a transmission service provider in a way that allows for undue discretion in the provision of transmission service.

97. In order to ensure that remaining opportunities for undue discrimination are identified and eliminated, the Commission proposes to direct the ERO to conduct a review of the procedures and assumptions included by each transmission service provider in its capacity benefit margin implementation document as of the date the Reliability Standards become effective. Based on its review, NERC would identify in the audit required above those instances in which additional procedures and assumptions are not sufficiently specific or transparent to allow the Commission and others to replicate and verify the calculation, allocation and use of capacity benefit margin by the transmission service provider.[73] Upon review of NERC's analysis, the Commission may direct the ERO to develop a modification to MOD–004–1 to address any lack of transparency. The Commission seeks comment whether additional requirements should be directed in this proceeding to ensure that the discretion provided under the capacity benefit margin implementation documents cannot be used to unduly discriminate in the provision of transmission service.

3. Transmission Reliability Margin Implementation Documents

98. Finally, the Commission proposes to direct the ERO to study whether the transmission reliability margin implementation documents developed by each transmission operator under the Reliability Standards contain a level of specificity sufficient to allow the Commission and others to replicate and verify the calculation and use of transmission reliability margin. Transmission reliability margin is transmission transfer capability set aside to mitigate risks to operations, such as deviations in dispatch, load forecast, outages, and similar such conditions. As NERC explains in its filing, transmission reliability margin is a subjective quantity as it is almost entirely based on the principles of risk management and risk tolerance, which vary from entity to entity.[74] Therefore, although MOD–008–1 identifies the particular categories of uncertainty that transmission operators may consider when establishing transmission reliability margin, the transmission operator is permitted to use any methodology to calculate, allocate, and use transmission reliability margins, provided that it is identified and described in the implementation document.

99. NERC states in its filing that guidance from the Commission would be necessary in order to specify in greater detail a single ''best'' methodology to govern the calculation of a maximum transmission reliability margin.[75] The Commission does not believe that it is necessary to establish a single methodology for calculating, allocating and using transmission reliability margin. In Order Nos. 890 and 693, the Commission directed NERC to clarify how transmission reliability margin should be calculated and allocated across paths or flowgates and how to establish an appropriate maximum transmission reliability margin.[76] The Commission directed NERC to specify the parameters for entities to use in determining uncertainties for which transmission reliability margin can be set aside and used. The Commission also directed the ERO to modify its Reliability Standards to prevent the use of capacity benefit margin and transmission reserve margin for the same purposes (*i.e.* double counting). The proposed Reliability Standard accomplishes these directives by requiring each transmission operator to identify in its transmission reliability margin implementation document the components that will be used to calculate transmission reliability margin, how those components will be used, and how resulting transmission reliability margin values will be allocated across paths or flowgates.[77] This level of detail satisfies the requirements of Order No. 890 and related directives of Order No. 693 by making each transmission operator's transmission reliability margin methodologies transparent.

100. However, as with MOD–001–1 and MOD–004–1, the Commission is concerned that MOD–008–1 could be implemented by a transmission operator in a way that allows for undue discrimination in the provision of transmission service. For example, Requirements R1.1 and R1.2 of MOD–008–1 require each transmission operator to include in its transmission reliability margin implementation document the components of uncertainty used in establishing a transmission reliability margin, a description of how those components

[73] The scope of this audit should not include review of the studies supporting requests for capacity benefit margin. The Commission agrees with NERC that it would be inappropriate to place a functional entity, such as the transmission service provider, in the position of having to judge the quality of a study supporting a customer's request for capacity benefit margin. Requirements R3 and R4 of MOD–004–1 identify the specific kinds of studies that must be performed and supporting information that is to be maintained when determining a need for capacity benefit margin. Compliance with these requirements can be audited by NERC and the regional entities in the normal course of their compliance review. *See Guidance Order on Compliance Audits Conducted by the Electric Reliability Organization and Regional Entities,* 126 FERC ¶ 61,038 (2009).

[74] NERC Filing at 97.

[75] *Id.*

[76] Order No. 890, FERC Stats. & Regs. ¶ 31,241 at P 275; Order No. 693, FERC Stats. & Regs. ¶ 31,242 at P 1122–23, 1126.

[77] MOD–008–1, Requirement R1.

are used in the calculation of transmission reliability margin, and a description of how transmission reliability margin is allocated across paths or flowgates. The transmission reliability margin implementation document developed by transmission operators could include parameters, modeling requirements, criteria or assumptions that are insufficiently transparent, providing the transmission operator the opportunity and ability to vary its calculations depending on the customer requesting transmission service.

101. In order to ensure that remaining opportunities for undue discrimination are identified and eliminated, the Commission proposes to direct the ERO to conduct a review of the procedures identified in each transmission operator's transmission reserve margin implementation document as of the date the Reliability Standards become effective. Based on its review, NERC would identify in the audit required above those instances in which procedures, criteria, or assumptions are not sufficiently specific or transparent to allow the Commission and others to replicate and verify the results of the transmission operator's calculation of transmission reserve margin. Upon review of NERC's analysis, the Commission may direct the ERO to develop a modification to MOD–008–1 to address any lack of transparency. The Commission seeks comment whether additional requirements should be directed in this proceeding to ensure that the discretion provided under the transmission reserve margin implementation documents cannot be used to unduly discriminate in the provision of transmission service.

B. Proposed Modifications of the Reliability Standards

102. While the Commission generally proposes to approve the Reliability Standards as in compliance with Order No. 890 and the related directives of Order No. 693, the Commission also proposes to direct the ERO to develop modifications of the Reliability Standards to comply with the following discrete issues: The availability of each transmission service provider's implementation documents; the consistent treatment of assumptions in the calculation of available transfer capability; the calculation, allocation and use of capacity benefit margin; the calculation of total transfer capability under the Rated System Path Methodology; and, the treatment of network resource designations in the calculation of available transfer capability. Each of these issues is discussed below.

1. Availability of Implementation Documents

a. NERC Proposal

103. The proposed Reliability Standards require that the available transfer capacity, capacity benefit margin, and transmission reliability margin implementation documents be made available to specified entities. Requirement R4 of MOD–001–1 requires that the following entities have access to the available transfer capability implementation document: Each planning coordinator, reliability coordinator, and transmission operator associated with the transmission service provider's area; and each planning coordinator, reliability coordinator, and transmission service provider adjacent to the transmission service provider's area. Requirement R2 of MOD–004–1 requires each transmission service provider to make its capacity benefit margin implementation document available to transmission operators, transmission service providers, reliability coordinators, transmission planners, resource planners, and planning coordinators that are within or adjacent to the transmission service provider's area, and to load-serving entities and balancing authorities within the transmission service provider's area. Requirement R3 of MOD–008–1 requires each transmission operator to provide its transmission reliability implementation document upon request by transmission service providers, reliability coordinators, transmission planners, and transmission operators. NERC states that it and NAESB have agreed that requirements for making information available to other entities are more appropriately addressed through the NAESB process.

b. Commission Proposal

104. The Commission is concerned that the proposed Reliability Standards potentially restrict the disclosure of the available transfer capability, capacity benefit margin, and transmission reliability margin implementation documents. NERC does not explain in its filings why only certain entities would have access to these materials, nor why the specified list of recipients varies for each document. While the Commission notes that the proposed NAESB standards accompanying the Reliability Standards would require transmission service providers to post a link to the implementation documents on their OASIS, which would result in disclosure beyond the specified entities listed in the Reliability Standards, the Commission believes that it is important for reliability purposes to require disclosure of the implementation documents to a broader audience than provided in the Reliability Standards. The Commission's jurisdiction under section 215 of the FPA is broader than our jurisdiction to require compliance with the NAESB standards under sections 205 and 206 of the FPA. These documents will describe how the transmission provider will implement the Reliability Standards and, therefore, should be disclosed by all transmission service providers, not only those who are also public utilities.

105. Therefore, to ensure sufficient transparency, the Commission proposes to direct the ERO, pursuant to section 215(d)(5) of the FPA and section 35.19(f) of our regulations, to modify the proposed Reliability Standards to make the available transfer capability, capacity benefit margin, and transmission reliability margin implementation documents available to all customers eligible for transmission service in a manner that is consistent with relevant NAESB standards. The Commission seeks comment on any improvements that may be necessary to improve access by transmission customers to the implementation documents.

2. Consistent Treatment of Assumptions

a. NERC Proposal

106. Under each of the methodologies contained in the proposed Reliability Standards, available transfer capability is calculated as total transfer capability minus existing transmission commitments, capacity benefit margin, and transmission reliability margin, plus postbacks and counterflows. NERC contends that the Reliability Standards work together to ensure that similar risks will not be double counted in the calculation of capacity benefit margin and transmission reliability margin. Specifically, Requirement R2 of MOD–008–1 prohibits a transmission operator from including any of the components of capacity benefit margin in the components of uncertainty used to calculate transmission reliability margin. NERC contends that MOD–004–1 addresses this prohibition by describing the specific type of studies and requirements that may be used to determine a need for capacity benefit margin.

b. Commission Proposal

107. The Commission is concerned that proposed Reliability Standards do not preclude a transmission service

provider from using data and assumptions in a way that double counts their impact on available transfer capability and thereby skews the amount of capacity made available to others. NERC states that MOD–004–1 and MOD–008–1 have been drafted to preclude the double counting of similar risks in the calculation of capacity benefit margin and transmission reliability margin. However, other components of the available transfer capability calculation could be affected by the same data or assumptions, and there is no apparent restriction in the Reliability Standards from such data or assumptions in a way that double counts their impact on available transfer capability.

108. For example, the Reliability Standards would appear to allow the transmission service provider to factor a reserve margin for facility outages into more than one of the components of the available transfer capability calculation. If the effect of the reserve margin were to appear in multiple components of the available transfer capability calculation in a similar way, under certain modeling approaches the results of that calculation would be skewed. While it may be appropriate for some variables to be factored into multiple components of the available transfer capability calculation, such as facility ratings, the Reliability Standards do not require that assumptions affecting multiple components of the available transfer capability calculation are implemented in a way that is consistent with their actual effect on available transfer capability. The Commission proposes to direct the ERO, pursuant to section 215(d)(5) of the FPA and section 35.19(f) of our regulations, to modify the proposed Reliability Standards to ensure that the proposed Reliability Standards preclude a transmission service provider from using data and assumptions in a way that double counts their impact on available transfer capability and thereby skews the amount of capacity made available to others.

3. Capacity Benefit Margin (MOD–004–1)

a. NERC Proposal

109. As noted above, Requirements R5.1 and R6.1 of MOD–004–1 require transmission service providers to establish capacity benefit margin values for each path and flowgate ''reflect[ing] consideration of'' both (i) studies provided by load-serving entities and resource planners demonstrating a need for capacity benefit margin and (ii) applicable reserve margin or resource adequacy requirements. In preparing their studies, Requirements R3.1 and R4.1 direct load-serving entities and resource planners to use one or more of the following to determine the generation capability import requirement: (i) Loss of load expectation studies, (ii) loss of load probability studies, (iii) deterministic risk-analysis studies, and (iv) applicable reserve margin or resource adequacy requirements. With regard to the allocation and use of transmission capacity set aside as capacity benefit margin, Requirement R1.3 requires the transmission service provider to include in its capacity benefit margin implementation document the procedure for a load-serving entity or balancing authority to use transmission capacity set aside as capacity benefit margin, including the manner in which the transmission service provider ''will manage'' situations where the requested use of capacity benefit margin exceeds the capacity benefit margin available.

b. Commission Proposal

110. In Order Nos. 890 and 693, the Commission emphasized that each load-serving entity has the right to request that capacity benefit margin be set aside, and to use transmission capacity set aside for that purpose, to meet its verifiable generation reliability criteria requirement.[78] The Commission is concerned that, as proposed, the Reliability Standard would allow a transmission service provider to calculate, allocate, and use capacity benefit margin in a way that impairs the reliable operation of the Bulk-Power System. Under the Reliability Standard, the transmission service provider is to ''reflect consideration'' of studies provided by load-serving entities and resource planners demonstrating a need for capacity benefit margin and ''manage'' situations where the requested use of capacity benefit margin exceeds the capacity benefit margin available. The Reliability Standard places no bounds on this ''consideration'' and ''management'' and, for example, would permit a transmission service provider to make decisions regarding the use of capacity benefit margin based solely on economic considerations notwithstanding a demonstration of need for capacity benefit margin by a load-serving entity or resource planner. The Commission proposes, pursuant to section 215(d)(5) of the FPA and section 39.5(f) of our regulations, to direct the ERO to develop a modification to the Capacity Benefit Margin Methodology (MOD–004–1) to ensure that the Reliability Standard would not allow a transmission service provider to calculate, allocate, and use capacity benefit margin in a way that impairs the reliable operation of the Bulk-Power System.

111. In addition, the Commission has concern regarding references to applicable reserve margin and resource adequacy requirements in the determination of the generation capability import requirements by load-serving entities and resource planners under Requirements R3.1 and R4.1. Under the phrasing of those provisions, load-serving entities and resource planners must determine their generation capability import requirement by using *one or more* of loss of load expectation studies, loss of load probability studies, deterministic risk-analysis studies, and applicable reserve margin or resource adequacy requirements. As a result, a load-serving entity or resource planner could rely solely on reserve margin and resource adequacy requirements to demonstrate a need for capacity benefit margin without any analysis of loss of load expectations, loss of load probabilities, or deterministic risk. In comparison, Requirements 5.1 and 6.1 obligate the transmission service provider to consider *both* the studies provided by load-serving entities and resource planners and applicable reserve margin and resource adequacy requirements when calculating capacity benefit margin and allocating it to particular paths or flowgates. The Commission proposes, pursuant to section 215(d)(5) of the FPA and section 39.5(f) of our regulations, to direct the ERO to develop a modification to MOD–004–1 to require load-serving entities and resource planners to determine generation capability import requirements by reference to relevant studies *and* applicable reserve margin or resource adequacy requirements, as relevant.

4. Calculation of Total Transfer Capability Under the Rated System Path Methodology (MOD–029–1)

a. NERC Proposal

112. Requirement R2 of the Rated System Path Methodology (MOD–029–1) provides the process a transmission operator must use to determine total transfer capability. Requirement R2.7 of that Reliability Standard requires the transmission operator to set the total transfer capability of an available transfer capability path to a value

[78] Order No. 693, FERC Stats. & Regs. ¶ 31,242 at P 1080. *see also* Order No. 890, FERC Stats. & Regs. ¶ 31,241 at P 259; Order No. 890–A, FERC Stats. & Regs. ¶ 31,261 at P 82.

determined prior to 1994 in certain instances:

R2.7. For available transfer capability Paths whose path rating, adjusted for seasonal variance, was established, known and used in operation since January 1, 1994, and no action has been taken to have the path rated using a different method, set the total transfer capability at that previously established amount.

b. Commission Proposal

113. In Order No. 890, the Commission required the use of consistent practices to calculate total transfer capability.[79] In Order No. 890–A, the Commission clarified that, while total transfer capability need not be recalculated at consistent time intervals, the transmission operator should consider whether any changes in system topology, contingency outages, or other factors are substantial enough to merit recalculation of total transfer capability.[80]

114. NERC has not explained the inclusion of Requirement R2.7 in the Rated System Path Methodology. It is not clear to the Commission why certain applicable entities would be required to use pre-1994 total transfer capability values. The Commission is concerned that requiring pre-1994 total transfer capability values to remain in place without adequate explanation essentially exempts certain paths from the total transfer capability requirements in the Rated System Path Methodology and may result in total transfer capability values that are incorrectly based on stale assumptions and criteria.

115. While the Commission proposes to approve the proposed Reliability Standard overall as just and reasonable and an improvement on available transfer capability transparency, as discussed above, pursuant to section 215(d)(5) of the FPA and section 39.5(f) of our regulations, the Commission seeks comment on whether it should direct the ERO to develop a modification to the Rated System Path Methodology (MOD–029–1) to remove Requirement R2.7 as unsupported.

5. Treatment of Network Resource Designations

a. NERC Proposal

116. In each of the proposed Reliability Standards, transmission service providers are required to identify as part of their calculation of existing transmission commitments the amount of capacity that is set aside for network integration transmission service.[81] However, the specificity of that requirement varies among the proposed Reliability Standards.

117. Under the Flowgate Methodology (MOD–030–2), Requirements R6.1 and 6.2 provide for calculation of the impact of network integration transmission service based on a modeling of load forecasts for the time period being calculated and unit commitment and dispatch order, including all designated network resources and other resources that are committed or have the legal obligation to run as specified in the transmission service provider's implementation document. Requirement R8 of the Area Interchange Methodology (MOD–028–1) and Requirement R5 of the Rated System Path Methodology (MOD–029–1) provide for the inclusion of firm capacity reserved for network integration transmission service, but do not describe how the transmission service provider is to identify that amount of capacity.

118. With regard to the frequency of these calculations, Requirement R8 of MOD–001–1 would require every transmission service provider calculating available transfer capability to perform recalculations of available transfer capability at specified frequencies, unless none of the calculated values identified in the available transfer capability equation have changed.

b. Commission Proposal

119. In Order No. 693, the Commission directed the ERO to develop requirements specifying how transmission service providers should determine which generators should be modeled in service when calculating available transfer capability.[82] Among other things, the Commission directed the ERO to revise the Reliability Standards to specify that base generation dispatch schedules will reflect the modeling of all designated network resources and other resources that are committed to or have the legal obligation to run, as they are expected to run. The Commission also directed transmission service providers to address the effect on available transfer capability of designating and undesignating a network resource.

120. NERC has not explained the failure to include in each of the available transfer capability methodologies a requirement that base generation dispatch schedules will reflect the modeling of all designated network resources and other resources that are committed to or have the legal obligation to run, as they are expected to run. It is therefore unclear whether the proposed Reliability Standards address the effect on available transfer capability of designating and undesignating a network resource. While the Commission proposes to approve the proposed Reliability Standards as just and reasonable and an improvement on available transfer capability transparency, pursuant to section 215(d)(5) of the FPA and section 39.5(f) of our regulations, the Commission proposes to direct the ERO to develop a modification to the Reliability Standards to address these requirements.

C. Violation Risk Factors and Violation Severity Levels

121. To determine a base penalty amount for a violation of a requirement within a Reliability Standard, NERC must first determine an initial range for the base penalty amount. To do so, NERC will assign a violation risk factor for each requirement of a Reliability Standard that relates to the expected or potential impact of a violation of the requirement on the reliability of the Bulk-Power System. For that requirement, the ERO assigns a lower, medium or high violation risk factor for each mandatory Reliability Standard requirement.[83] The Commission has established guidelines for evaluating the validity of each violation risk factor assignment.[84]

122. NERC will also define up to four violation severity levels—lower, moderate, high and severe—as measurements for the degree to which the requirement was violated in a specific circumstance. For a specific violation of a particular requirement, NERC or the Regional Entity will establish the initial value range for the base penalty amount by finding the intersection of the applicable violation

[79] Order No. 890, FERC Stats. & Regs. ¶ 31,241 at P 237.

[80] Order No. 890–A, FERC Stats. & Regs. ¶ 31,261 at P 105.

[81] *See* MOD–028–001, Requirement R8; MOD–029–1, Requirement R5; MOD–030–2, Requirement R6.1.

[82] Order No. 693, FERC Stats. & Regs. ¶ 31,242 at P 1041.

[83] The specific definitions of high, medium and lower are provided in *North American Electric Reliability Corp.*, 119 FERC ¶ 61,145 at P 9, *order on reh'g,* 120 FERC ¶ 61,145 (2007) (Violation Risk Factor Rehearing Order).

[84] The guidelines are: (1) Consistency with the conclusions of the blackout report; (2) consistency within a Reliability Standard; (3) consistency among Reliability Standards; (4) consistency with NERC's definition of the violation risk factor level; and (5) treatment of requirements that co-mingle more than one obligation. The Commission also explained that this list was not necessarily all-inclusive and that it retained the flexibility to consider additional guidelines in the future. A detailed explanation is provided in the Violation Risk Factor Rehearing Order, 120 FERC ¶ 61,145 at P 8–13.

risk factor and violation severity level in the base penalty amount table in appendix A of its sanction guidelines.

123. On June 19, 2008, the Commission issued an order establishing four guidelines for the development of violation severity levels.[85] First, the violation severity level assignments should not have the unintended consequence of lowering the current level of compliance. Second, the violation severity levels should ensure uniformity and consistency in the determination of penalties. Third, a violation severity level assignment should be consistent with the corresponding requirement. Fourth, a violation severity level assignment should be based on a single violation, not on a cumulative number of violations.

1. NERC Proposal

124. In its August 29, 2008 filing, NERC proposes violation severity levels that are specific to the individual requirements of the proposed Reliability Standards. NERC states that it developed violation severity level assignments for MOD–001–1, MOD–008–1, MOD–028–1, MOD–029–1, and MOD–030–1 prior to issuance of the Violation Severity Level Order. As a result, NERC states that it has not analyzed the proposed violation severity levels relative to the Commission's guidelines established in the Violation Severity Level Order.

125. In addition, NERC states that it is not filing the associated violation risk factors with these Reliability Standards. While violation risk factors have been developed and balloted for each of the five proposed Reliability Standards, NERC states that its Board believes further review of the violation risk factors is warranted given recent Commission actions in general and the development history of these violation risk factors in particular. In accordance with its Rules of Procedure, NERC states that it will submit violation risk factors for these proposed Reliability Standards in a future filing.

126. NERC states that each balloted Reliability Standard included a violation risk factor for each main requirement in the Reliability Standard. For all the requirements in the balloted MOD Reliability Standards, the applicable violation risk factors were ''lower.'' In developing the violation risk factor assignments, NERC states that there were opposing viewpoints with respect to the appropriate assignments. According to NERC, one view offered that available transfer capability and its associated methodologies do not directly affect the electrical state of the system or the ability to monitor or control it as would be required under the ''medium'' violation risk factor assignment. NERC states that an incorrect available transfer capability calculation may lead to oversubscribing or undersubscribing the system. According to NERC, undersubscribing, while affecting the potential for commercial activity, actually benefits reliability. Oversubscribing the system as a result of an optimistic available transfer capability value, while somewhat beneficial to commercial activity, may lead to a reliability concern that if realized can be managed by the operator's adherence to system limits, to the extent that the operator has options to implement some measure of transmission loading relief to reduce flows due to transactions. NERC states that for an incorrect available transfer capability to become a reliability issue requires an optimistic available transfer capability value, coupled with the sale of that available transfer capability, and an operator who is not mindful to the system limits, the last of which is governed by other transmission operator and interconnection operating Reliability Standards. On this argument, according to NERC, assigning a ''medium'' violation risk factor due to the ''direct'' impact is questionable.

127. On this basis, the drafting team evaluated the scope of the remaining work to meet the Commission deadline and focused its attention to the technical issues, adjusting the violation risk factors to ''lower'' based on the industry comments and the arguments presented above. However, NERC states that its Board believes that a more thorough review of the violation risk factors is warranted given recent Commission actions in general and the development history of these violation risk factors in particular. NERC's board has asked NERC staff to review these violation risk factors through an open stakeholder process to ensure that they are consistent with the intent of the violation risk factor definitions and prior Commission decisions on violation risk factors. Accordingly, NERC states that it is not filing the associated violation risk factors with these Reliability Standards at this time. NERC states that it will submit violation risk factors for these proposed Reliability Standards in a future filing.

128. In its November 21, 2008 and March 6, 2009 filings, NERC proposes violations severity levels for MOD–004–1 and MOD–030–2, respectively. Similar to the violation severity levels proposed for MOD–001–1, MOD–008–1, MOD–028–1, MOD–029–1, and MOD–030–1, NERC does not propose any violation severity levels for the sub-requirements. In addition, NERC states that its board of trustees deferred action on the violation risk factors associated with these Reliability Standards and asked that they be reviewed through an open stakeholder process, with a report back to the board, to ensure that they are consistent with the intent of the violation risk factor definitions and Commission precedent. NERC states that it will submit violation risk factors for these Reliability Standards in a future filing.

2. Commission Proposal

129. The Commission proposes to accept NERC's commitment to file violation severity levels and violation risk factors at a later time. The Violation Severity Level Order was issued after NERC developed the violation severity level assignments for the Reliability Standards at issue in this proceeding. As a result, NERC was unable to evaluate and modify the proposed violation severity levels to comply with our guidelines prior to filing the proposed Reliability Standards. The Commission proposes to direct the ERO to reevaluate the violation severity levels associated with all of the proposed Reliability Standards based on the Commission's guidelines outlined in the Violation Severity Level Order and prepare appropriate revisions. In addition, the Commission proposes to accept NERC's proposal to allow NERC staff to review the violation risk factors through an open stakeholder process to ensure that they are consistent with the intent of the violation risk factor definitions and guidance provided in the Violation Risk Factor Order and the Violation Risk Factor Rehearing Order. The Commission proposes to direct NERC to file revised violation severity levels and violation risk factors no later than 120 days before the Reliability Standards become effective.

D. Disposition of Other Reliability Standards

1. MOD–010–1 through MOD–025–1

130. Order No. 890 directed public utilities, working through NERC, to modify the reliability standards MOD–010 through MOD–025[86] to incorporate

[85] *North American Electric Reliability Corp.*, 123 FERC ¶ 61,284, at P 20–35 (Violation Severity Level Order), *order on reh'g & compliance*, 125 FERC ¶ 61,212 (2008).

[86] The MOD–010 through MOD–025 Reliability Standards establish data requirements, reporting procedures, and system model development and

Continued

a requirement for the periodic review and modification of models for (1) load flow base cases with contingency, subsystem, and monitoring files, (2) short circuit data, and (3) transient and dynamic stability simulation data, in order to ensure that they are up to date. The Commission found that this requirement is essential in order to have an accurate simulation of the performance of the grid and from which to comparably calculate available transfer capability, therefore increasing transparency and decreasing the potential for undue discrimination by transmission service providers.[87]

a. NERC Proposal

131. NERC states that this modeling activity is outside the scope of the available transfer capability Reliability Standards drafting team effort because it requires a different skill set and expertise than that required for developing available transfer capability and should be addressed by a separate drafting team. NERC states that these Reliability Standards are part of its Reliability Standards Development Plan. NERC states that this is consistent with Order No. 693, which identified nine Reliability Standards, none of which were MOD–010 through MOD–025, as the core of the available transfer capability initiative directed in Order No. 890.[88]

b. Commission Proposal

132. The Commission proposes to allow NERC to address revisions to MOD–010 through MOD–025 through a separate project. Those Reliability Standards are generally intended to establish consistent data requirements, reporting procedures and system models for use in reliability analysis. As such, the Commission proposes to find that NERC is correct that they were not a part of the available transfer capability modifications required in Order Nos. 890 and 693.

2. Reliability Standards Proposed To Be Retired or Withdrawn

a. NERC Proposal

133. NERC requests that FAC–013–1, MOD–006–0, and MOD–007–0 be retired when the available transfer capability-related Reliability Standards become effective. In addition, NERC requests to withdraw its request for approval of the following Reliability Standards that were neither approved nor remanded in Order No. 693, effective upon approval of the available transfer capability-related MOD Reliability Standards in this proceeding: FAC–012–1, MOD–001–0, MOD–002–0, MOD–003–0, MOD–004–0, MOD–005–0, MOD–008–0, and MOD–009–0. According to NERC, these Reliability Standards are wholly superseded by the MOD Reliability Standards addressed in this proceeding.

b. Commission Proposal

134. The Commission proposes to approve NERC's request to retire MOD–006–0 and MOD–007–0 and to withdraw its request for approval of MOD–001–0, MOD–002–0, MOD–003–0, MOD–004–0, MOD–005–0, MOD–008–0, and MOD–009–0. The Commission also proposes to find that MOD–001–0, MOD–002–0, MOD–003–0, MOD–004–0, MOD–005–0, MOD–008–0, and MOD–009–0 are all superseded by the available transfer capability calculations required by the proposed MOD Reliability Standards in this proceeding and are, upon the effectiveness of the proposed MOD Reliability Standards, no longer necessary.

135. With regard to FAC–012–1 and FAC–013–1, the Commission disagrees with NERC that these Reliability Standards are wholly superseded by the MOD Reliability Standards addressed in this proceeding. Under FAC–012–1, reliability coordinators and planning authorities would be required to document the methodology used to establish inter-regional and intra-regional transfer capabilities and to state whether the methodology is applicable to the planning horizon or the operating horizon. Under FAC–013–1, reliability coordinators and planning authorities are required to establish a set of inter-regional and intra-regional transfer capabilities that are consistent with the methodology documented under FAC–012–1, which could require the calculation of transfer capabilities for both the planning horizon and the operating horizon. In comparison, the proposed MOD Reliability Standards provide only for the calculation of available transfer capability and its components, including total transfer capability, in the operating horizon.[89] The proposed MOD Reliability Standards do not govern the calculation of transfer capabilities in the planning horizon, *i.e.*, beyond 13 months in the future.

136. In Order No. 693, the Commission approved FAC–013–1, but declined to approve or remand FAC–012–1. The Commission expressed concern that FAC–012–1 merely required the documentation of a transfer capability methodology without providing a framework for that methodology including data inputs and modeling assumptions.[90] The Commission also expressed concern that the criteria used to calculate transfer capabilities for use in determining available transfer capability must be identical to those used in planning and operating the system.[91] The Commission directed the ERO to modify FAC–012–1 to provide a framework for the transfer capability calculation methodology that takes account of the need for consistency in the criteria used to calculate transfer capabilities.[92]

137. The available transfer capability methodologies set forth in MOD–028–1, MOD–029–1, and MOD–030–2 each provide a framework for the calculation of total transfer capability and total flowgate capability that specifies certain data inputs and modeling assumptions to be used.[93] Requirement R7 of MOD–001–1 also provides that, when calculating available transfer capability or available flowgate capability, the transmission provider shall use assumptions no more limiting than those used in the planning of operations for the corresponding time period studied. It therefore appears that the MOD Reliability Standards provide a framework for the consistent calculation of total transfer capability for the operating horizon. However, NERC has not addressed the requirements of Order No. 693 with regard to the calculation of transfer capabilities in the planning horizon.

138. The Commission therefore proposes not to grant NERC's request to withdraw FAC–012–1, nor approve the retirement of FAC–013–1. Instead, the Commission proposes, pursuant to section 215(d)(5) of the FPA and section 39.5(f) of our regulations, to direct the ERO to submit a revised FAC–012–1 and a modification to FAC–013–1 to comply with the relevant directives of Order No. 693 and as otherwise necessary to make the requirements of those Reliability Standards consistent with those of the proposed MOD Reliability Standards and the final rule in this proceeding. The Commission proposes to direct the ERO to submit a revised FAC–012–1 and a modification

validation for use in the reliability analysis of the interconnected transmission systems.

[87] Order No. 890, FERC Stats. & Regs. ¶ 31,241 at P 290.

[88] Order No. 693, FERC Stats. & Regs. ¶ 31,242 at P 206.

[89] *See* MOD–001–1, Requirement R2.3.

[90] Order No. 693, FERC Stats. & Regs. ¶ 31,242 at P 777.

[91] *Id.* P 782.

[92] *Id.* P 779, 782.

[93] *See* MOD–028–1, Requirements R3 and R4; MOD–029–1, Requirements R2 and R3; MOD–030–2, Requirement R2.4.

to FAC–013–1, as well as violation severity levels and violation risk factors for FAC–012–1 and FAC–013–1, no later than 120 days before the MOD Reliability Standards become effective.

E. Definitions

139. In Order Nos. 890 and 693, the Commission noted that there was not a definition of available flowgate capability/total flowgate capability in the ERO's glossary and directed the ERO to develop available flowgate capability/total flowgate capability definitions used to identify a particular set of transmission facilities as flowgates.

1. NERC Proposal

140. NERC proposes to modify its Glossary of Terms to add the following twenty definitions that are used in the five proposed Reliability Standards, two of which wholly replace existing terms in the Commission-approved NERC Glossary: [94]

Area Interchange Methodology: The Area Interchange Methodology is characterized by determination of incremental transfer capability via simulation, from which Total Transfer Capability (TTC) can be mathematically derived. Capacity Benefit Margin (CBM), Transmission Reliability Margin (TRM), and Existing Transmission Commitments (ETC) are subtracted from the TTC, and Postbacks and counterflows are added, to derive Available Transfer Capability (ATC). Under the Area Interchange Methodology, TTC results are generally reported on an area to area basis.

ATC Path: Any combination of Point of Receipt (POR) and Point of Delivery (POD) for which Available Transfer Capability (ATC) is calculated; and any Posted Path.[95]

Available Flowgate Capability (AFC): A measure of the flow capability remaining on a Flowgate for further commercial activity over and above already committed uses. It is defined as Total Flowgate Capability (TFC) less Existing Transmission Commitments (ETC), less a Capacity Benefit Margin (CBM), less a Transmission Reliability Margin (TRM), plus Postbacks, and plus counterflows.

Available Transfer Capability (ATC): A measure of the transfer capability remaining in the physical transmission network for further commercial activity over and above already committed uses. It is defined as Total Transfer Capability (TTC) less Existing Transmission Commitments (ETC) (including retail customer service), less a Capacity Benefit Margin (CBM), less a Transmission Reliability Margin (TRM), plus Postbacks, plus counterflows.

Available Transfer Capability Implementation Document (ATCID): A document that describes the implementation of a methodology for calculating Available Transfer Capability (ATC) or Available Flowgate Capability (AFC), and provides information related to a Transmission Service Provider's calculation of ATC or AFC.

Block Dispatch: A set of dispatch rules such that given a specific amount of load to serve, an approximate generation dispatch can be determined. To accomplish this, the capacity of a given generator is segmented into loadable ''blocks,'' each of which is grouped and ordered relative to other blocks (based on characteristics including, but not limited to, efficiency, run of river or fuel supply considerations, and/or ''must-run'' status).

Business Practices: Those business rules contained in the Transmission Service Provider's applicable tariff, rules, or procedures; associated Regional Reliability Organization or Regional Entity business practices; or North American Energy Standards Board (NAESB) Business Practices.

Capacity Benefit Margin Implementation Document (CBMID): A document that describes the implementation of a Capacity Benefit Margin methodology.

Dispatch Order: A set of dispatch rules such that given a specific amount of load to serve, an approximate generation dispatch can be determined. To accomplish this, each generator is ranked by priority.

Existing Transmission Commitments (ETC): Committed uses of a Transmission Service Provider's Transmission system considered when determining Available Transfer Capability (ATC) or Available Flowgate Capability (AFC).

Flowgate:

(1) A portion of the Transmission system through which the Interchange Distribution Calculator calculates the power flow from Interchange Transactions.

(2) A mathematical construct, comprised of one or more monitored transmission Facilities and optionally one or more contingency Facilities, used to analyze the impact of power flows upon the Bulk Electric System.

Flowgate Methodology: The Flowgate methodology is characterized by identification of key Facilities as Flowgates. Total Flowgate Capabilities (TFC) are determined based on Facility Ratings and voltage and stability limits. The impacts of Existing Transmission Commitments (ETCs) are determined by simulation. The impacts of ETC, Capacity Benefit Margin (CBM) and Transmission Reliability Margin (TRM) are subtracted from the TFC, and Postbacks and counterflows are added, to determine the Available Flowgate Capability (AFC) value for that Flowgate. AFCs can be used to determine Available Transfer Capability (ATC).

Generation Capability Import Requirement (GCIR): The amount of generation capability from external sources identified by a Load-Serving Entity (LSE) or Resource Planner (RP) to meet its generation reliability or resource adequacy requirements as an alternative to internal resources.

Outage Transfer Distribution Factor (OTDF): In the post-contingency configuration of a system under study, the electric Power Transfer Distribution Factor (PTDF) with one or more system Facilities removed from service (outaged).

Participation Factors: A set of dispatch rules such that given a specific amount of load to serve, an approximate generation dispatch can be determined. To accomplish this, generators are assigned a percentage that they will contribute to serve load.

Planning Coordinator: See Planning Authority.

Postback: Positive adjustments to Available Transfer Capability (ATC) or Available Flowgate Capability (AFC) as defined in Business Practices. Such Business Practices may include processing of redirects and unscheduled service.

Power Transfer Distribution Factor (PTDF): In the pre-contingency configuration of a system under study, a measure of the responsiveness or change in electrical loadings on transmission system Facilities due to a change in electric power transfer from one area to another, expressed in percent (up to 100%) of the change in power transfer.

Rated System Path Methodology: The Rated System Path Methodology is characterized by an initial Total Transfer Capability (TTC), determined via simulation. Capacity Benefit Margin (CBM), Transmission Reliability Margin (TRM), and Existing Transmission Commitments (ETC) are subtracted from TTC, and Postbacks and counterflows are added as applicable, to derive Available Transfer Capability (ATC). Under the Rated System Path Methodology, TTC results are generally reported as specific transmission path capabilities.

Total Flowgate Capability (TFC): The maximum flow capability on a Flowgate, is not to exceed its thermal rating, or in the case of a flowgate used to represent a specific operating constraint (such as a voltage or stability limit), is not to exceed the associated System Operating Limit.

Transmission Operator Area: The collection of Transmission assets over which the Transmission Operator is responsible for operating.

Transmission Reliability Margin Implementation Document (TRMID): A document that describes the implementation of a Transmission Reliability Margin (TRM) methodology, and provides information related to a Transmission Operator's calculation of TRM.

2. Commission Proposal

141. The Commission proposes to approve the addition of these terms to the NERC Glossary with minor modification. The Commission believes that the definition of Postback is not fully determinative. NERC should be able to define this term without reference to Business Practices, another defined term. The Commission therefore proposes to direct NERC to modify the definition of Postback.

142. The definition of Business Practices includes a reference to the ''regional reliability organization.'' In Order No. 693, the Commission directed NERC to eliminate references to regional reliability organizations as responsible entities in the Reliability Standards

[94] These include Available Transfer Capability and Flowgate.

[95] *See* 18 CFR 37.6(b)(1) (2008).

because such entities are not users, owners or operators of the Bulk-Power System.[96] Accordingly, the Commission proposes to direct NERC to remove from the proposed definition of Business Practices, the reference to regional reliability organizations and replace it with the term Regional Entity. However, Regional Entity is not currently defined in the NERC Glossary. The Commission therefore proposes to direct NERC to develop a definition of Regional Entity consistent with section 215(a) of the FPA[97] and 18 CFR 39.1 (2008), to be included in the NERC Glossary.

IV. Information Collection Statement

143. The following collections of information contained in this proposed rule have been submitted to the Office of Management and Budget (OMB) for review under section 3507(d) of the Paperwork Reduction Act of 1995.[98] OMB's regulations require OMB to approve certain information collection requirements imposed by agency rule.[99]

144. Comments are solicited on the need for this information, whether the information will have practical utility, ways to enhance the quality, utility, and clarity of the information to be collected, and any suggested methods for minimizing respondents' burden, including the use of automated information techniques.

Burden Estimate: The public reporting and records retention burdens for the proposed reporting requirements and the records retention requirement are as follows.[100]

Data collection	Number of respondents	Number of responses	Hours per response	Total annual hours
Mandatory data exchanges	137	1	80	10,960
Explanation of change of ATC values	137	1	100	13,700
Recordkeeping	137	1	30	3,480

Total Annual Hours for Collection:

Reporting + recordkeeping hours = 3,480 + 24,660 = 28,140 hours.

Cost to Comply:

Reporting = $2,811,240

24,660 hours @ $114 an hour (average cost of attorney ($200 per hour), consultant ($150), technical ($80), and administrative support ($25))

Recordkeeping = $185,875 (same as below)

Labor (file/record clerk @ $17 an hour) 3,480 hours @ $17/hour = $59,150

Storage 137 respondents @ 8,000 sq. ft. × $925 (off site storage) = $126,725

Total costs = $2,997,115

Labor $ ($2,811,240+ $59,150) + Recordkeeping Storage Costs ($126,725)

OMB's regulations require it to approve certain information collection requirements imposed by an agency rule. The Commission is submitting notification of this proposed rule to OMB. If the proposed requirements are adopted they will be mandatory requirements.

Title: Mandatory Reliability Standards for the Calculation of Available Transfer Capability, Capacity Benefit Margins, Transmission Reliability Margins, Total Transfer Capability, and Existing Transmission Commitments and Mandatory Reliability Standards for the Bulk-Power System.

Action: Proposed Collections.

OMB Control Nos. [to be determined].

Respondents: Business or other for profit.

Frequency of responses: On occasion.

Necessity of the Information:

145. *Internal Review:* The Commission has reviewed the proposed reliability standards and made a determination that these requirements are necessary to implement section 215 of the Energy Policy Act of 2005. These requirements conform to the Commission's plan for efficient information collection, communication and management within the energy industry. The Commission has to assure itself, by means of internal review, that there is specific, objective support for the burden estimates associated with the information requirements.

146. Interested persons may obtain information on the reporting requirements by contacting the following: Federal Energy Regulatory Commission, 888 First Street, NE. Washington, DC 20426 [*Attention:* Michael Miller, Office of the Executive Director, *Phone:* (202) 502–8415, *fax:* (202) 273–0873, *e-mail: michael.miller@ferc.gov*].

147. For submitting comments concerning the collection(s) of information and the associated burden estimate(s), please send your comments to the contact listed above and to the Office of Information and Regulatory Affairs, Office of Information and Regulatory Affairs, Washington, DC 20503 [*Attention:* Desk Officer for the Federal Energy Regulatory Commission, phone (202) 395–4650, *fax:* (202) 395–7285, *e-mail: oira_submission@omb.eop.gov*].

V. Environmental Analysis

148. The Commission is required to prepare an Environmental Assessment or an Environmental Impact Statement for any action that may have a significant adverse effect on the human environment.[101] The actions proposed here fall within the categorical exclusion in the Commission's regulations for rules that are clarifying, corrective or procedural, for information gathering, analysis, and dissemination.[102]

VI. Regulatory Flexibility Act Certification

149. The Regulatory Flexibility Act of 1980 (RFA)[103] generally requires a description and analysis of final rules that will have significant economic impact on a substantial number of small entities. The MOD Reliability Standards apply to transmission service providers and transmission operators, most of which do not fall within the definition of small entities.[104]

150. As indicated above, approximately 137 entities will be responsible for compliance with the three new Reliability Standards. Of these only six, or less than five percent, have output of four million MWh or less

[96] Order No. 693, FERC Stats. & Regs.¶ 31,242 at P 157.

[97] 16 U.S.C. 824o.

[98] 44 U.S.C. 3507(d).

[99] 5 CFR 1320.11.

[100] These burden estimates apply only to this NOPR and do not reflect upon all of FERC–516 or FERC–717.

[101] *Regulations Implementing the National Environmental Policy Act,* Order No. 486, 52 FR 47897 (Dec. 17, 1987), FERC Stats. & Regs. ¶ 30,783 (1987).

[102] 18 CFR 380.4(a)(5).

[103] 5 U.S.C. 601–612.

[104] The definition of ''small entity'' under the Regulatory Flexibility Act refers to the definition provided in the Small Business Act, which defines a ''small business concern'' as a business that is independently owned and operated and that is not dominant in its field of operation. *See* 15 U.S.C. 632 (2000).

per year.[105] The Commission does not consider this a substantial number.[106] Based on this understanding, the Commission certifies that this rule will not have a significant economic impact on a substantial number of small entities. Accordingly, no regulatory flexibility analysis is required.

VII. Comment Procedures

151. The Commission invites interested persons to submit comments on the matters and issues proposed in this notice to be adopted, including any related matters or alternative proposals that commenters may wish to discuss. Comments are due May 26, 2009. Comments must refer to Docket Nos. RM08–19–000, RM08–19–001, RM09–5–000 and RM06–16–005, and must include the commenter's name, the organization they represent, if applicable, and their address in their comments.

152. The Commission encourages comments to be filed electronically via the eFiling link on the Commission's Web site at *http://www.ferc.gov*. The Commission accepts most standard word processing formats. Documents created electronically using word processing software should be filed in native applications or print-to-PDF format and not in a scanned format. Commenters filing electronically do not need to make a paper filing.

153. Commenters that are not able to file comments electronically must send an original and 14 copies of their comments to: Federal Energy Regulatory Commission, Secretary of the Commission, 888 First Street NE., Washington, DC 20426.

154. All comments will be placed in the Commission's public files and may be viewed, printed, or downloaded remotely as described in the Document Availability section below. Commenters on this proposal are not required to serve copies of their comments on other commenters.

VIII. Document Availability

155. In addition to publishing the full text of this document in the **Federal Register**, the Commission provides all interested persons an opportunity to view and/or print the contents of this document via the Internet through FERC's Home Page (*http://www.ferc.gov*) and in FERC's Public Reference Room during normal business hours (8:30 a.m. to 5 p.m. Eastern time) at 888 First Street, NE., Room 2A, Washington DC 20426.

156. From FERC's Home Page on the Internet, this information is available on eLibrary. The full text of this document is available on eLibrary in PDF and Microsoft Word format for viewing, printing, and/or downloading. To access this document in eLibrary, type the docket number excluding the last three digits of this document in the docket number field.

157. User assistance is available for eLibrary and the FERC's Web site during normal business hours from FERC Online Support at 202–502–6652 (toll free at 1–866–208–3676) or e-mail at *ferconlinesupport@ferc.gov*, or the Public Reference Room at (202) 502–8371, TTY (202) 502–8659. E-mail the Public Reference Room at *public.referenceroom@ferc.gov*.

By direction of the Commission.

Kimberly D. Bose,

Secretary.

[FR Doc. E9–6505 Filed 3–24–09; 8:45 am]

BILLING CODE 6717–01–P

[105] *Id.*

[106] The Regulatory Flexibility Act defines a ''small entity'' as ''one which is independently owned and operated and which is not dominant in its field of operation.'' *See* 5 U.S.C. 601(3) and 601(6); 15 U.S.C. 632(a)(1). In *Mid-Tex Elec. Coop.* v. *FERC,* 773 F.2d 327, 340–43 (DC Cir. 1985), the court accepted the Commission's conclusion that, since virtually all of the public utilities that it regulates do not fall within the meaning of the term *small entities* as defined in the Regulatory Flexibility Act, the Commission did not need to prepare a regulatory flexibility analysis in connection with its proposed rule governing the allocation of costs for construction work in progress (CWIP). The CWIP rules applied to all public utilities. The revised *pro forma* OATT will apply only to those public utilities that own, control or operate interstate transmission facilities. These entities are a subset of the group of public utilities found not to require preparation of a regulatory flexibility analysis for the CWIP rule.

DEPARTMENT OF HOMELAND SECURITY

Coast Guard

33 CFR Part 100

[Docket No. USCG–2009–0106]

RIN 1625–AA08

Special Local Regulation for Marine Events; Temporary Change of Dates for Recurring Marine Events in the Fifth Coast Guard District

AGENCY: Coast Guard, DHS.

ACTION: Notice of proposed rulemaking.

SUMMARY: The Coast Guard proposes to temporarily change the enforcement period of special local regulations for recurring marine events in the Fifth Coast Guard District. These regulations apply to only five recurring marine events that conduct on water activities such as power boat races, swimming competitions, and harbor celebrations. Special local regulations are necessary to provide for the safety of life on navigable waters during the event. This action is intended to restrict vessel traffic in portions of the Chester River, MD; Rappahannock River, VA; Elizabeth River, Southern Branch, VA; North Atlantic Ocean, Ocean City, MD; and Pasquotank River during each event.

DATES: Comments and related material must either be submitted to our online docket via *http://www.regulations.gov* on or before April 24, 2009 or reach the Docket Management Facility by that date.

ADDRESSES: You may submit comments identified by docket number USCG–2009–0106 using any one of the following methods:

(1) *Federal eRulemaking Portal: http://www.regulations.gov.*

(2) *Fax:* 202–493–2251.

(3) *Mail:* Docket Management Facility (M–30), U.S. Department of Transportation, West Building Ground Floor, Room W12–140, 1200 New Jersey Avenue, SE., Washington, DC 20590–0001.

(4) *Hand delivery:* Same as mail address above, between 9 a.m. and 5 p.m., Monday through Friday, except Federal holidays. The telephone number is 202–366–9329.

To avoid duplication, please use only one of these methods. For instructions on submitting comments, see the ''Public Participation and Request for Comments'' portion of the **SUPPLEMENTARY INFORMATION** section below.

FOR FURTHER INFORMATION CONTACT: If you have questions on this proposed rule, call Dennis Sens, Project Manager, Fifth Coast Guard District, Prevention Division, at 757–398–6204 or e-mail at *Dennis.M.Sens@uscg.mil.* If you have questions on viewing or submitting material to the docket, call Renee V. Wright, Program Manager, Docket Operations, telephone 202–366–9826.

SUPPLEMENTARY INFORMATION:

Public Participation and Request for Comments

We encourage you to participate in this rulemaking by submitting comments and related materials. All comments received will be posted, without change, to *http://www.regulations.gov* and will include any personal information you have provided.

Submitting Comments

If you submit a comment, please include the docket number for this rulemaking (USCG–2009–0106),

indicate the specific section of this document to which each comment applies, and provide a reason for each suggestion or recommendation. You may submit your comments and material online, or by fax, mail or hand delivery, but please use only one of these means. We recommend that you include your name and a mailing address, an e-mail address, or a phone number in the body of your document so that we can contact you if we have questions regarding your submission.

To submit your comment online, go to *http://www.regulations.gov,* select the Advanced Docket Search option on the right side of the screen, insert ''USCG–2009–0106'' in the Docket ID box, press Enter, and then click on the balloon shape in the Actions column. If you submit your comments by mail or hand delivery, submit them in an unbound format, no larger than 8½ by 11 inches, suitable for copying and electronic filing. If you submit them by mail and would like to know that they reached the Facility, please enclose a stamped, self-addressed postcard or envelope. We will consider all comments and material received during the comment period and may change the rule based on your comments.

Viewing Comments and Documents

To view comments, as well as documents mentioned in this preamble as being available in the docket, go to *http://www.regulations.gov,* select the Advanced Docket Search option on the right side of the screen, insert USCG–2009–0106 in the Docket ID box, press Enter, and then click on the item in the Docket ID column. You may also visit either the Docket Management Facility in Room W12–140 on the ground floor of the Department of Transportation West Building, 1200 New Jersey Avenue, SE., Washington, DC 20590, between 9 a.m. and 5 p.m., Monday through Friday, except Federal holidays; or the Fifth Coast Guard District, Prevention Division, 431 Crawford Street, Portsmouth, VA 23704, between 10 a.m. and 2 p.m., Monday through Friday, except Federal holidays. We have an agreement with the Department of Transportation to use the Docket Management Facility.

Privacy Act

Anyone can search the electronic form of comments received into any of our dockets by the name of the individual submitting the comment (or signing the comment, if submitted on behalf of an association, business, labor union, etc.). You may review a Privacy Act notice regarding our public dockets in the January 17, 2008 issue of the **Federal Register** (73 FR 3316).

Public Meeting

We do not now plan to hold a public meeting. But you may submit a request for one to the Docket Management Facility at the address under **ADDRESSES** explaining why one would be beneficial. If we determine that one would aid this rulemaking, we will hold one at a time and place announced by a later notice in the **Federal Register**.

Background and Purpose

Marine events are frequently held on the navigable waters within the boundary of the Fifth Coast Guard District. The on-water activities that typically comprise marine events include sailing regattas, powerboat races, swim races and holiday parades. For a description of the geographical area of each Coast Guard Sector—Captain of the Port Zone, please see 33 CFR 3.25.

This regulation proposes to temporarily change the enforcement period of special local regulations for recurring marine events within the Fifth Coast Guard District. This proposed regulation applies to five marine events in 33 CFR 100.501, Table to § 100.501.

Annually, the District of Columbia Aquatics Club sponsors the ''Maryland Swim for Life,'' on the waters of the Chester River near Chestertown, MD. The regulation at 33 CFR 100.501 is effective annually for the Maryland Swim for Life marine event. The event is an open water swimming competition held on the waters of the Chester River, near Chestertown, Maryland. Approximately 150 swimmers will start from Rolph's Wharf and swim up-river 2.5 miles then swim downriver returning back to Rolph's Wharf. A large fleet of support vessels accompany the swimmers. Therefore, to ensure the safety of participants and support vessels, 33 CFR 100.501 would be enforced for the duration of the event. Under provisions of 33 CFR 100.501, from 5:30 a.m. to 2:30 p.m. on July 11, 2009, vessels may not enter the regulated area unless they receive permission from the Coast Guard Patrol Commander. Vessel traffic may be allowed to transit the regulated area only when the Patrol Commander determines it is safe to do so.

On June 6, 2009, the Rappahannock River Boaters Association (RRBA) will sponsor the ''2009 RRBA Spring Radar Shootout,'' on the waters of the Rappahannock River near Layton, Virginia. The regulation at 33 CFR 100.501 is effective annually for this river boat race marine event. The event consists of approximately 35 powerboats participating in high-speed competitive races, traveling along a 3-mile straight line racecourse. Participating boats race individually within the designated course. A fleet of spectator vessels is anticipated to gather nearby to view the competition. Due to the need for vessel control during the event, vessel traffic will be temporarily restricted to provide for the safety of participants, spectators and transiting vessels. The regulation at 33 CFR 100.501 would be enforced for the duration of the event. Under provisions of 33 CFR 100.501, from 12 p.m. to 5 p.m. on June 6, 2009, or rain date June 7, 2009, vessels may not enter the regulated area unless they receive permission from the Coast Guard Patrol Commander.

Norfolk Festevents Ltd., Norfolk, VA sponsors the annual ''Norfolk Harborfest Celebration,'' on the waters of the Elizabeth River between Norfolk and Portsmouth, VA. The regulation at 33 CFR 100.501 is effective annually for the Norfolk Harborfest marine event. This annual celebration of Norfolk Harbor consists of a variety of on the water activities that include an Opening Ceremony—Parade of Sail; jet ski, water ski, wake board demonstrations; Fire boat demonstrations; Lazy Lizzie Anything That Floats Parade and Race; Dinghy Parade; Search and Rescue demonstrations by USCG & USN; and Quick and Dirty Boat Race. Evening pyrotechnic displays ''fireworks'' will be fired from barge(s) on the Elizabeth River as part of the Harborfest celebration. A large fleet of spectator vessels is anticipated to view the Harborfest activities. Therefore, to ensure the safety of participants, spectators and transiting vessels, 33 CFR 100.501 would be enforced for the duration of the event. Under provisions of 33 CFR 100.501, from 9 a.m. July 3, 2009 to 11 p.m. on July 5, 2009, vessels may not enter the regulated area unless they receive permission from the Coast Guard Patrol Commander. Vessel traffic will be allowed to transit the regulated area between on the water events, when the Patrol Commander determines it is safe to do so.

The Offshore Performance Association (OPA) Racing LLC annually sponsors the ''Offshore Grand Prix,'' on the waters of the North Atlantic Ocean near Ocean City, MD. The regulation at 33 CFR 100.501 is effective annually for the Ocean City Offshore race marine event. The event is conducted on the waters of the North Atlantic Ocean along the shoreline near Ocean City, MD. The event consists of approximately 50 V-hull and twin-hull

inboard hydroplanes racing in heats counter-clockwise around an oval race course. A fleet of spectator vessels is anticipated to gather nearby to view the competition. Therefore, to ensure the safety of participants, spectators and transiting vessels, 33 CFR 100.501 would be enforced for the duration of the event. Under provisions of 33 CFR 100.501, from 10 a.m. May 30, 2009 to 5 p.m. on May 31, 2009, vessels may not enter the regulated area unless they receive permission from the Coast Guard Patrol Commander. Due to the need for vessel control during the event, vessel traffic will be temporarily restricted to provide for the safety of participants, spectators and transiting vessels.

The Carolina Cup Regatta, Inc. annually sponsors a power boat race on the waters of the Pasquotank River near Elizabeth City, NC. The regulation at 33 CFR 100.501 is effective annually for this power boat race marine event. The event consists of approximately 25 inboard hydroplanes racing in counter clockwise heats around an oval race course. A fleet of spectator vessels is anticipated to gather nearby to view the competition. Therefore, to ensure the safety of participants, spectators and transiting vessels, 33 CFR 100.501 will be enforced for the duration of the event. Under provisions of 33 CFR 100.501, from 9 a.m. May 16, 2009 to 5 p.m. on May 17, 2009, vessels may not enter the regulated area unless they receive permission from the Coast Guard Patrol Commander. Due to the need for vessel control during the event, vessel traffic will be temporarily restricted to provide for the safety of participants, spectators and transiting vessels.

Discussion of Proposed Rule

The Coast Guard proposes to temporarily suspend the regulations at 33 CFR 100.501 by changing the date of enforcement in the table to § 100.501. The Coast Guard proposes to temporarily change the enforcement period of special local regulations for recurring marine events within the Fifth Coast Guard District. This regulation applies to five marine events listed in the Table to § 100.501 and are listed as follows.

Chester River, Chestertown, MD

The Table to § 100.501, event No. 21 establishes the enforcement date for the Maryland Swim for Life. This regulation proposes to temporarily change the enforcement date from ''June—3rd Saturday or July—3rd Saturday'' to the second Saturday in July, holding the marine event on July 11, 2009. The District of Columbia Aquatics Club, which is the sponsor for this event, intends to hold this event annually; however, they have changed the date of the event for 2009 so that it is outside the scope of the existing enforcement period. Due to the need for vessel control while swimmers are in the water along the Chester River, vessel traffic would be temporarily restricted to provide for the safety of participants, spectators and transiting vessels.

Rappahannock River, Layton, VA

The Table to § 100.501, event No. 40 establishes the enforcement date for the ''2009 RRBA Spring Radar Shootout''. This regulation proposes to temporarily change the enforcement date from ''June—last Saturday'' to the first Saturday in June, holding the marine event on June 6, 2009. The temporary special local regulations will be enforced from 12 p.m. to 5 p.m. on June 6, 2009, and will restrict general navigation in the regulated area during the event. The Rappahannock River Boaters Association (RRBA), which is the sponsor for this event, intends to hold this event annually; however, they have changed the date of the event for 2009 so that it is outside the scope of the existing enforcement period. Except for participants and vessels authorized by the Coast Guard Patrol Commander, no person or vessel will be allowed to enter or remain in the regulated area. These regulations are needed to control vessel traffic during the event to enhance the safety of participants, spectators and transiting vessels.

Elizabeth River, Norfolk, VA

The Table to § 100.501, event No. 37 establishes the enforcement date for Norfolk Harborfest. This regulation proposes to temporarily change the enforcement date from ''June—1st Friday, Saturday and Sunday'' to the first Friday, Saturday and Sunday in July, holding the marine event on July 3, through July 5, 2009. The Norfolk Festevents Ltd., which is the sponsor for this event, intends to hold this event annually; however, they have changed the date of the event for 2009 so that it is outside the scope of the existing enforcement period. Due to the need for vessel control during various on water activities along the Elizabeth River, vessel traffic would be temporarily restricted to provide for the safety of participants, spectators and transiting vessels.

North Atlantic Ocean, Ocean City, MD

The Table to § 100.501, event No. 38 establishes the enforcement date for the Ocean City Maryland Offshore Grand Prix. This regulation proposes to temporarily change the enforcement date from ''June—1st Friday and Saturday'' to the last Saturday and Sunday in May, holding the marine event on May 30 and 31, 2009. The Offshore Performance Association (OPA) Racing LLC, which is the sponsor for this event, intends to hold this event annually; however, they have changed the date of the event for 2009 so that it is outside the scope of the existing enforcement period. Due to the need for vessel control while high performance power boats race along the shoreline at Ocean City, MD, vessel traffic would be temporarily restricted to provide for the safety of participants, spectators and transiting vessels.

Pasquotank River, Elizabeth City, NC

The Table to § 100.501, event No. 54 establishes the enforcement date for the Carolina Cup Regatta. This regulation proposes to temporarily change the enforcement date from ''June—2nd Saturday and Sunday'' to the third Saturday and Sunday in May, holding the marine event on May 16 and 17, 2009. The Carolina Cup Regatta Inc., which is the sponsor for this event, intends to hold this event annually; however, they have changed the date of the event for 2009 so that it is outside the scope of the existing enforcement period. Due to the need for vessel control while high performance power boats race along the Pasquotank River near Elizabeth City, NC, vessel traffic would be temporarily restricted to provide for the safety of participants, spectators and transiting vessels.

Except for persons or vessels authorized by the Coast Guard Patrol Commander, no person or vessel may enter or remain in the regulated areas during the effective period. The regulated area is needed to control vessel traffic during the event to enhance the safety of participants and transiting vessels.

In addition to notice in the **Federal Register**, the maritime community will be provided extensive advance notification via the Local Notice to Mariners, and marine information broadcasts so mariners can adjust their plans accordingly.

Regulatory Analyses

We developed this proposed rule after considering numerous statutes and executive orders related to rulemaking. Below we summarize our analyses based on 13 of these statutes or executive orders.

Regulatory Planning and Review

This proposed rule is not a significant regulatory action under section 3(f) of Executive Order 12866, Regulatory Planning and Review, and does not require an assessment of potential costs and benefits under section 6(a)(3) of that Order. The Office of Management and Budget has not reviewed it under that Order.

Although this proposed rule prevents traffic from transiting a portion of certain waterways during specified events, the effect of this regulation will not be significant due to the limited duration that the regulated area will be in effect and the extensive advance notifications that will be made to the maritime community via marine information broadcasts, local radio stations and area newspapers so mariners can adjust their plans accordingly. Additionally, this rulemaking does not change the permanent regulated areas that have been published in 33 CFR 100.501, Table to § 100.501. In some cases vessel traffic may be able to transit the regulated area when the Coast Guard Patrol Commander deems it is safe to do so.

Small Entities

Under the Regulatory Flexibility Act (5 U.S.C. 601–612), we have considered whether this proposed rule would have a significant economic impact on a substantial number of small entities. The term ''small entities'' comprises small businesses, not-for-profit organizations that are independently owned and operated and are not dominant in their fields, and governmental jurisdictions with populations of less than 50,000.

The Coast Guard certifies under 5 U.S.C. 605(b) that this proposed rule would not have a significant economic impact on a substantial number of small entities. This rule would affect the following entities, some of which might be small entities: the owners or operators of vessels intending to transit or anchor in the areas where marine events are being held. This regulation will not have a significant impact on a substantial number of small entities because it will be enforced only during marine events that have been permitted by the Coast Guard Captain of the Port. The Captain of the Port will ensure that small entities are able to operate in the areas where events are occurring when it is safe to do so. In some cases, vessels will be able to safely transit around the regulated area at various times, and, with the permission of the Patrol Commander, vessels may transit through the regulated area. Before the enforcement period, the Coast Guard will issue maritime advisories so mariners can adjust their plans accordingly.

If you think that your business, organization, or governmental jurisdiction qualifies as a small entity and that this rule would have a significant economic impact on it, please submit a comment (see **ADDRESSES**) explaining why you think it qualifies and how and to what degree this rule would economically affect it.

Assistance for Small Entities

Under section 213(a) of the Small Business Regulatory Enforcement Fairness Act of 1996 (Pub. L. 104–121), we want to assist small entities in understanding this proposed rule so that they can better evaluate its effects on them and participate in the rulemaking. If the rule would affect your small business, organization, or governmental jurisdiction and you have questions concerning its provisions or options for compliance, please contact Fifth Coast Guard District listed under **FOR FURTHER INFORMATION CONTACT** at the beginning of this rule. The Coast Guard will not retaliate against small entities that question or complain about this proposed rule or any policy or action of the Coast Guard.

Collection of Information

This proposed rule would call for no new collection of information under the Paperwork Reduction Act of 1995 (44 U.S.C. 3501–3520.).

Federalism

A rule has implications for federalism under Executive Order 13132, Federalism, if it has a substantial direct effect on State or local governments and would either preempt State law or impose a substantial direct cost of compliance on them. We have analyzed this proposed rule under that Order and have determined that it does not have implications for federalism.

Unfunded Mandates Reform Act

The Unfunded Mandates Reform Act of 1995 (2 U.S.C. 1531–1538) requires Federal agencies to assess the effects of their discretionary regulatory actions. In particular, the Act addresses actions that may result in the expenditure by a State, local, or tribal government, in the aggregate, or by the private sector of $100,000,000 or more in any one year. Though this proposed rule would not result in such an expenditure, we do discuss the effects of this rule elsewhere in this preamble.

Taking of Private Property

This proposed rule would not effect a taking of private property or otherwise have taking implications under Executive Order 12630, Governmental Actions and Interference with Constitutionally Protected Property Rights.

Civil Justice Reform

This proposed rule meets applicable standards in sections 3(a) and 3(b)(2) of Executive Order 12988, Civil Justice Reform, to minimize litigation, eliminate ambiguity, and reduce burden.

Protection of Children

We have analyzed this proposed rule under Executive Order 13045, Protection of Children from Environmental Health Risks and Safety Risks. This rule is not an economically significant rule and would not create an environmental risk to health or risk to safety that might disproportionately affect children.

Indian Tribal Governments

This proposed rule does not have tribal implications under Executive Order 13175, Consultation and Coordination with Indian Tribal Governments, because it would not have a substantial direct effect on one or more Indian tribes, on the relationship between the Federal Government and Indian tribes, or on the distribution of power and responsibilities between the Federal Government and Indian tribes.

Energy Effects

We have analyzed this proposed rule under Executive Order 13211, Actions Concerning Regulations That Significantly Affect Energy Supply, Distribution, or Use. We have determined that it is not a ''significant energy action'' under that order because it is not a ''significant regulatory action'' under Executive Order 12866 and is not likely to have a significant adverse effect on the supply, distribution, or use of energy. The Administrator of the Office of Information and Regulatory Affairs has not designated it as a significant energy action. Therefore, it does not require a Statement of Energy Effects under Executive Order 13211.

Technical Standards

The National Technology Transfer and Advancement Act (NTTAA) (15 U.S.C. 272 note) directs agencies to use voluntary consensus standards in their regulatory activities unless the agency provides Congress, through the Office of Management and Budget, with an explanation of why using these

standards would be inconsistent with applicable law or otherwise impractical. Voluntary consensus standards are technical standards (*e.g.*, specifications of materials, performance, design, or operation; test methods; sampling procedures; and related management systems practices) that are developed or adopted by voluntary consensus standards bodies.

This proposed rule does not use technical standards. Therefore, we did not consider the use of voluntary consensus standards.

Environment

We have analyzed this proposed rule under Department of Homeland Security Directive 0023.1 and Commandant Instruction M16475.lD, which guide the Coast Guard in complying with the National Environmental Policy Act of 1969 (NEPA) (42 U.S.C. 4321–4370f), and made a preliminary determination that this action is one of a category of actions which do not individually or cumulatively have a significant effect on the human environment. Therefore, this rule is categorically excluded, under section 2.B.2. Figure 2–1, paragraph 34(h), of the Instruction and neither an environmental assessment nor an environmental impact statement is required. This rule involves implementation of regulations within 33 CFR Part 100 that apply to organized marine events on the navigable waters of the United States that may have potential for negative impact on the safety or other interest of waterway users and shore side activities in the event area. The category of water activities includes but is not limited to sail boat regattas, boat parades, power boat racing, swimming events, crew racing, and sail board racing. Under figure 2–1, paragraph (34)(h), of the Instruction, an ''Environmental Analysis Check List'' and a ''Categorical Exclusion Determination'' are not required for this rule. We seek any comments or information that may lead to discovery of a significant environmental impact from this proposed rule.

List of Subjects in 33 CFR Part 100

Marine safety, Navigation (water), Reporting and recordkeeping requirements, Waterways.

For the reasons discussed in the preamble, the Coast Guard proposes to amend 33 CFR part 100 as follows:

PART 100—SAFETY OF LIFE ON NAVIGABLE WATERS

1. The authority citation for part 100 continues to read as follows:

Authority: 33 U.S.C. 1233.

2. In the Table to § 100.501, suspend line Nos. 21, 37, 38, 40 and 54 from May 15, 2009 to July 15, 2009; and

a. From 5:30 a.m. to 2:30 p.m., on July 11, 2009, add line No. 58;

b. From 12 p.m. to 5 p.m., on June 6, 2009, add line No. 59;

c. From 9 a.m., July 3, 2009 to 11 p.m., July 5, 2009, add line No. 60;

d. From 10 a.m., May 30, 2009 to 5 p.m., May 31, 2009, add line No. 61; and

e. From 9 a.m., May 16, 2009 to 5 p.m., May 17, 2009, add line No. 62.

The additions read as follows:

§ 100.501–T05–0106 Special Local Regulations; Marine Events in the Fifth Coast Guard District.

* * * * *

Table To § 100.501.—All coordinates listed in the Table to § 100.501 Reference Datum NAD 1983.

Number	Date	Event	Sponsor	Location
Coast Guard Sector Baltimore—COTP Zone				
*	*	*	*	* * *
58	July 11, 2009	Maryland Swim for Life.	District of Columbia Aquatics Club.	The waters of the Chester River from shoreline to shoreline, bounded on the south by a line drawn at latitude 39°10′16″ N, near the Chester River Channel Buoy 35 (LLN–26795) and bounded on the north at latitude 39°12′30″ N by the Maryland S.R. 213 Highway Bridge.
Coast Guard Sector Hampton Roads—COTP Zone				
59	June 6, 2009; rain date: June 7, 2009.	RRBA Spring Radar Shootout.	Rappahannock River Boaters Association (RRBA).	The waters of the Rappahannock River, adjacent to Layton, VA, from shoreline to shoreline, bounded on the west by a line running along longitude 076°58′30″ W, and bounded on the east by a line running along longitude 076°56′00″ W.

Number	Date	Event	Sponsor	Location
60	July 3, 2009–July 5, 2009.	Norfolk Harborfest	Norfolk Festevents, Ltd.	The waters of the Elizabeth River and its branches from shore to shore, bounded to the northwest by a line drawn across the Port Norfolk Reach section of the Elizabeth River between the northern corner of the landing at Hospital Point, Portsmouth, Virginia, latitude 36°50′51.″ N, longitude 076°18′09.0″ W and the north corner of the City of Norfolk Mooring Pier at the foot of Brooks Avenue located at latitude 36°51′00.0″ N, longitude 076°17′52.0″ W; bounded on the southwest by a line drawn from the southern corner of the landing at Hospital Point, Portsmouth, Virginia, at latitude 36°50′50.0″ N, longitude 076°18′10.0″ W, to the northern end of the eastern most pier at the Tidewater Yacht Agency Marina, located at latitude 36°50′29.0″ N, longitude 076°17′52.0″ W; bounded to the south by a line drawn across the Lower Reach of the Southern Branch of the Elizabeth River, between the Portsmouth Lightship Museum located at the foot of London Boulevard, in Portsmouth, Virginia at latitude 36°50′10.0″ N, longitude 076°17′47.0″ W, and the northwest corner of the Norfolk Shipbuilding & Drydock, Berkley Plant, Pier No. 1, located at latitude 36°50′08.0″ N, longitude 076°17′39.0″ W; and to the southeast by the Berkley Bridge which crosses the Eastern Branch of the Elizabeth River between Berkley at latitude 36°50′21.5″ N, longitude 076°17′14.5″ W, and Norfolk at latitude 36°50′35.0″ N, longitude 076°17′10.0″ W.
61	May 30, 2009–May 31, 2009.	Ocean City Maryland Offshore Grand Prix.	Offshore Performance Association, OPA Racing, LLC.	The waters of the Atlantic Ocean commencing at a point on the shoreline at latitude 38°25′42″ N, longitude 075°03′06″ W; thence east southeast to latitude 38°25′30″ N, longitude 075°02′12″ W, thence south southwest parallel to the Ocean City shoreline to latitude 38°19′12″ N, longitude 075°03′48″ W; thence west northwest to the shoreline at latitude 38°19′30″ N, longitude 075°05′00″ W. The waters of the Atlantic Ocean bounded by a line drawn from a position along the shoreline near Ocean City, MD at latitude 38°22′25.2″ N, longitude 075°03′49.4″ W, thence easterly to latitude 38°22′00.4″ N, longitude 075°02′34.8″ W, thence southwesterly to latitude 38°19′35.9″ N, longitude 075°03′35.4″ W, thence westerly to a position near the shoreline at latitude 38°20′05″ N, longitude 075°04′48.4″ W, thence northerly along the shoreline to the point of origin.
Coast Guard Sector North Carolina—COTP Zone				
62	May 16, 2009–May 17, 2009.	Carolina Cup Regatta.	The Carolina Cup Regatta Inc.	The waters of the Pasquotank River, adjacent to Elizabeth City, NC, from shoreline to shoreline, bounded on the west by the Elizabeth City Draw Bridge and bounded on the east by a line originating at a point along the shoreline at latitude 36°17′54″ N, longitude 076°12′00″ W, thence southwesterly to latitude 36°17′35″ N, longitude 076°12′18″ W at Cottage Point.

* * * * *

Dated: March 16, 2009.

Neil O. Buschman,

Captain, U.S. Coast Guard, Commander, Fifth Coast Guard District, Acting.

[FR Doc. E9–6424 Filed 3–24–09; 8:45 am]

BILLING CODE 4910–15–P

ENVIRONMENTAL PROTECTION AGENCY

40 CFR Part 52

[EPA–R04–OAR–2007–1186–200821(b); FRL–8781–4]

Approval and Promulgation of Air Quality Implementation Plans: Kentucky; Approval of Section 110(a)(1) Maintenance Plans for the 1997 8-Hour Ozone Standard for the Huntington—Ashland Area, Lexington Area and Edmonson County

AGENCY: Environmental Protection Agency (EPA).

ACTION: Proposed rule.

SUMMARY: EPA is proposing to approve revisions to the Kentucky State Implementation Plan (SIP) concerning the 8-hour ozone maintenance plans addressing the 1997 8-hour ozone standard for the following areas: the Kentucky portion of the Huntington-Ashland Area (a portion of Greenup County); Lexington Area (Fayette and Scott Counties); and Edmonson County. These maintenance plans were submitted for EPA action on May 27, 2008, by the Commonwealth of Kentucky and ensure the continued attainment of the 1997 8-hour ozone National Ambient Air Quality Standard (NAAQS) through the year 2020. These plans meet the statutory and regulatory requirements, and are consistent with EPA's guidance. EPA is proposing to

approve the revisions pursuant to section 110 of the Clean Air Act. On March 12, 2008, EPA issued a revised ozone standard. This action, however, is being taken to address requirements under the 1997 ozone standard. Requirements for the Huntington-Ashland, Lexington, and Edmonson County Areas under the 2008 standard will be addressed in the future.

In the Final Rules Section of this **Federal Register**, EPA is approving the State's SIP revision as a direct final rule without prior proposal because the Agency views this as a noncontroversial submittal and anticipates no adverse comments. A detailed rationale for the approval is set forth in the direct final rule. If no adverse comments are received in response to this rule, no further activity is contemplated. If EPA receives adverse comments, the direct final rule will be withdrawn and all public comments received will be addressed in a subsequent final rule based on this proposed rule. EPA will not institute a second comment period on this document. Any parties interested in commenting on this document should do so at this time.

DATES: Written comments must be received on or before April 24, 2009.

ADDRESSES: Submit your comments, identified by Docket ID No. EPA–R04–OAR–2007–1186 by one of the following methods:

1. *Federal eRulemaking Portal: www.regulations.gov:* Follow the on-line instructions for submitting comments.

2. *E-mail:* Jane Spann at *Spann.Jane@epa.gov.*

3. *Fax:* (404) 562–9019.

4. *Mail:* ''EPA–R04–OAR–2007–1186'' Regulatory Development Section, Air Planning Branch, Air, Pesticides and Toxics Management Division, U.S. Environmental Protection Agency, Region 4, 61 Forsyth Street, SW., Atlanta, Georgia 30303–8960.

5. *Hand Delivery or Courier:* Jane Spann, Regulatory Development Section, Air Planning Branch, Air, Pesticides and Toxics Management Division, U.S. Environmental Protection Agency, Region 4, 61 Forsyth Street, SW., Atlanta, Georgia 30303–8960. Such deliveries are only accepted during the Regional Office's normal hours of operation. The Regional Office's official hours of business are Monday through Friday, 8:30 to 4:30, excluding Federal holidays.

Please see the direct final rule which is located in the Rules section of this **Federal Register** for detailed instructions on how to submit comments.

FOR FURTHER INFORMATION CONTACT: Jane Spann or Zuri Farngalo, Regulatory Development Section, Air Planning Branch, Air, Pesticides and Toxics Management Division, U.S. Environmental Protection Agency, Region 4, 61 Forsyth Street, SW., Atlanta, Georgia 30303–8960. Jane Spann may be reached by phone at (404) 562–9029 or by electronic mail address *Spann.Jane@epa.gov.* Zuri Farngalo may be reached at (404) 562–9152 and the electronic mail address is *Farngalo.Zuri@epa.gov.*

SUPPLEMENTARY INFORMATION: For additional information see the direct final rule which is published in the Rules Section of this **Federal Register**.

Dated: February 25, 2009.

Beverly H. Banister,

Acting Regional Administrator, Region 4.

[FR Doc. E9–6590 Filed 3–24–09; 8:45 am]

BILLING CODE 6560–50–P

ENVIRONMENTAL PROTECTION AGENCY

40 CFR Part 52

[EPA–R03–OAR–2009–0093; FRL–8779–7]

Approval and Promulgation of Air Quality Implementation Plans; Virginia; Volatile Organic Compound Reasonably Available Control Technology for Reynolds Consumer Products Company

AGENCY: Environmental Protection Agency (EPA).

ACTION: Proposed rule.

SUMMARY: EPA proposes to approve the State Implementation Plan (SIP) revision submitted by the Commonwealth of Virginia that pertains to a State operating permit containing terms and conditions for the control of emissions of volatile organic compounds (VOCs) from Reynolds Consumer Products Company located in Richmond, Virginia. In the Final Rules section of this **Federal Register**, EPA is approving the Commonwealth's SIP submittal as a direct final rule without prior proposal because the Agency views this as a noncontroversial submittal and anticipates no adverse comments. A detailed rationale for the approval is set forth in the direct final rule. If no adverse comments are received in response to this action, no further activity is contemplated. If EPA receives adverse comments, the direct final rule will be withdrawn and all public comments received will be addressed in a subsequent final rule based on this proposed rule. EPA will not institute a second comment period. Any parties interested in commenting on this action should do so at this time.

DATES: Comments must be received in writing by April 24, 2009.

ADDRESSES: Submit your comments, identified by Docket ID Number EPA–R03–OAR–2009–0093 by one of the following methods:

A. *http://www.regulations.gov.* Follow the on-line instructions for submitting comments.

B. E-mail: fernandez.cristina@epa.gov.

C. *Mail:* EPA–R03–OAR–2009–0093, Cristina Fernandez, Chief, Air Quality Planning, Mailcode 3AP21, U.S. Environmental Protection Agency, Region III, 1650 Arch Street, Philadelphia, Pennsylvania 19103.

D. *Hand Delivery:* At the previously-listed EPA Region III address. Such deliveries are only accepted during the Docket's normal hours of operation, and special arrangements should be made for deliveries of boxed information.

Instructions: Direct your comments to Docket ID No. EPA–R03–OAR–2009–0093. EPA's policy is that all comments received will be included in the public docket without change, and may be made available online at *http://www.regulations.gov,* including any personal information provided, unless the comment includes information claimed to be Confidential Business Information (CBI) or other information whose disclosure is restricted by statute. Do not submit information that you consider to be CBI or otherwise protected through *http://www.regulations.gov* or e-mail. The *http://www.regulations.gov* Web site is an ''anonymous access'' system, which means EPA will not know your identity or contact information unless you provide it in the body of your comment. If you send an e-mail comment directly to EPA without going through *http://www.regulations.gov,* your e-mail address will be automatically captured and included as part of the comment that is placed in the public docket and made available on the Internet. If you submit an electronic comment, EPA recommends that you include your name and other contact information in the body of your comment and with any disk or CD–ROM you submit. If EPA cannot read your comment due to technical difficulties and cannot contact you for clarification, EPA may not be able to consider your comment. Electronic files should avoid the use of special characters, any form of encryption, and be free of any defects or viruses.

Docket: All documents in the electronic docket are listed in the *http://*

www.regulations.gov index. Although listed in the index, some information is not publicly available, i.e., CBI or other information whose disclosure is restricted by statute. Certain other material, such as copyrighted material, is not placed on the Internet and will be publicly available only in hard copy form. Publicly available docket materials are available either electronically in *http://www.regulations.gov* or in hard copy during normal business hours at the Air Protection Division, U.S. Environmental Protection Agency, Region III, 1650 Arch Street, Philadelphia, Pennsylvania 19103. Copies of the State submittal are available at the Virginia Department of Environmental Quality, 629 East Main Street, Richmond, Virginia, 23219.

FOR FURTHER INFORMATION CONTACT: Irene Shandruk, (215) 814–2166, or by e-mail at *shandruk.irene@epa.gov.*

SUPPLEMENTARY INFORMATION: For further information, please see the information provided in the direct final action, ''Approval and Promulgation of Air Quality Implementation Plans; Virginia; Volatile Organic Compound Reasonably Available Control Technology for Reynolds Consumer Products Company,'' that is located in the ''Rules and Regulations'' section of this **Federal Register** publication.

February 24, 2009.

William T. Wisniewski,

Acting Regional Administrator, Region III.

[FR Doc. E9–6653 Filed 3–24–09; 8:45 am]

BILLING CODE 6560–50–P

ENVIRONMENTAL PROTECTION AGENCY

40 CFR Part 52

[EPA–R01–OAR–2008–0796; A–1–FRL–8785–7]

Approval and Promulgation of Air Quality Implementation Plans; Rhode Island; Carbon Monoxide Limited Maintenance Plan for Providence, RI

AGENCY: Environmental Protection Agency (EPA).

ACTION: Proposed rule.

SUMMARY: The EPA is proposing to approve a State Implementation Plan (SIP) revision submitted by the State of Rhode Island. This revision establishes a limited maintenance plan for the Providence, Rhode Island carbon monoxide attainment area and addresses the remaining portion of the ten-year update to the carbon monoxide maintenance plan. This action is being taken in accordance with the Clean Air Act.

DATES: Written comments must be received on or before April 24, 2009.

ADDRESSES: Submit your comments, identified by Docket ID No. EPA-R01-OAR–2008–0796 by one of the following methods:

1. *www.regulations.gov:* Follow the on-line instructions for submitting comments.
2. *E-mail: arnold.anne@epa.gov.*
3. *Mail:* ''EPA–R01–OAR–2008–0796'', Anne Arnold, U.S. Environmental Protection Agency, EPA New England Regional Office, One Congress Street, Suite 1100 (mail code CAQ), Boston, MA 02114–2023.
4. *Hand Delivery or Courier.* Deliver your comments to: Anne Arnold, Manager, Air Quality Planning Unit, Office of Ecosystem Protection, U.S. Environmental Protection Agency, EPA New England Regional Office, One Congress Street, 11th floor, (CAQ), Boston, MA 02114–2023. Such deliveries are only accepted during the Regional Office's normal hours of operation. The Regional Office's official hours of business are Monday through Friday, 8:30 to 4:30, excluding legal holidays.

Please see the direct final rule which is located in the Rules Section of this **Federal Register** for detailed instructions on how to submit comments.

FOR FURTHER INFORMATION CONTACT: Donald O. Cooke, Air Quality Unit, U.S. Environmental Protection Agency, EPA New England Regional Office, One Congress Street, Suite 1100 (CAQ), Boston, MA 02114–2023, telephone number (617) 918–1668, fax number (617) 918–0668, e-mail *cooke.donald@epa.gov.*

SUPPLEMENTARY INFORMATION: In the Final Rules Section of this **Federal Register**, EPA is approving the State's SIP submittal as a direct final rule without prior proposal because the Agency views this as a noncontroversial submittal and anticipates no adverse comments. A detailed rationale for the approval is set forth in the direct final rule. If no adverse comments are received in response to this action rule, no further activity is contemplated. If EPA receives adverse comments, the direct final rule will be withdrawn and all public comments received will be addressed in a subsequent final rule based on this proposed rule. EPA will not institute a second comment period. Any parties interested in commenting on this action should do so at this time. Please note that if EPA receives adverse comment on an amendment, paragraph, or section of this rule and if that provision may be severed from the remainder of the rule, EPA may adopt as final those provisions of the rule that are not the subject of an adverse comment.

For additional information, see the direct final rule which is located in the Rules Section of this **Federal Register**.

Dated: March 12, 2009.

Ira W. Leighton,

Acting Regional Administrator, EPA New England.

[FR Doc. E9–6639 Filed 3–24–09; 8:45 am]

BILLING CODE 6560–50–P

ENVIRONMENTAL PROTECTION AGENCY

40 CFR Part 52

[EPA–R03–OAR–2009–0110; FRL–8782–3]

Approval and Promulgation of Air Quality Implementation Plans; West Virginia; Amendments to the Control of Air Pollution From Combustion of Refuse

AGENCY: Environmental Protection Agency (EPA).

ACTION: Proposed rule.

SUMMARY: EPA proposes to approve the State Implementation Plan (SIP) revision submitted by the State of West Virginia for the purpose of amending a regulation to control air pollution from combustion of refuse. In the Final Rules section of this **Federal Register**, EPA is approving the West Virginia's SIP submittal as a direct final rule without prior proposal because the Agency views this as a noncontroversial submittal and anticipates no adverse comments. A detailed rationale for the approval is set forth in the direct final rule. If no adverse comments are received in response to this action, no further activity is contemplated. If EPA receives adverse comments, the direct final rule will be withdrawn and all public comments received will be addressed in a subsequent final rule based on this proposed rule. EPA will not institute a second comment period. Any parties interested in commenting on this action should do so at this time.

DATES: Comments must be received in writing by April 24, 2009.

ADDRESSES: Submit your comments, identified by Docket ID Number EPA–R03–OAR–2009–0110 by one of the following methods:

A. *www.regulations.gov.* Follow the on-line instructions for submitting comments.

B. *E-mail: fernandez.cristina@epa.gov.*

C. *Mail:* EPA–R03–OAR–2009–0110, Cristina Fernandez, Chief, Air Quality Planning Branch, Mailcode 3AP21, U.S. Environmental Protection Agency, Region III, 1650 Arch Street, Philadelphia, Pennsylvania 19103.

D. *Hand Delivery:* At the previously-listed EPA Region III address. Such deliveries are only accepted during the Docket's normal hours of operation, and special arrangements should be made for deliveries of boxed information.

Instructions: Direct your comments to Docket ID No. EPA–R03–OAR–2009–0110. EPA's policy is that all comments received will be included in the public docket without change, and may be made available online at *www.regulations.gov,* including any personal information provided, unless the comment includes information claimed to be Confidential Business Information (CBI) or other information whose disclosure is restricted by statute. Do not submit information that you consider to be CBI or otherwise protected through *www.regulations.gov* or e-mail. The *www.regulations.gov* Web site is an ''anonymous access'' system, which means EPA will not know your identity or contact information unless you provide it in the body of your comment. If you send an e-mail comment directly to EPA without going through *www.regulations.gov,* your e-mail address will be automatically captured and included as part of the comment that is placed in the public docket and made available on the Internet. If you submit an electronic comment, EPA recommends that you include your name and other contact information in the body of your comment and with any disk or CD–ROM you submit. If EPA cannot read your comment due to technical difficulties and cannot contact you for clarification, EPA may not be able to consider your comment. Electronic files should avoid the use of special characters, any form of encryption, and be free of any defects or viruses.

Docket: All documents in the electronic docket are listed in the *www.regulations.gov* index. Although listed in the index, some information is not publicly available, i.e., CBI or other information whose disclosure is restricted by statute. Certain other material, such as copyrighted material, is not placed on the Internet and will be publicly available only in hard copy form. Publicly available docket materials are available either electronically in *www.regulations.gov* or in hard copy during normal business hours at the Air Protection Division, U.S. Environmental Protection Agency, Region III, 1650 Arch Street, Philadelphia, Pennsylvania 19103. Copies of the State submittal are available at the West Virginia Department of Environmental Protection, Division of Air Quality, 601 57th Street SE., Charleston, WV 25304.

FOR FURTHER INFORMATION CONTACT: Rose Quinto, (215) 814–2182, or by e-mail at *quinto.rose@epa.gov.*

SUPPLEMENTARY INFORMATION: For further information, please see the information provided in the direct final action, with the same title, ''Approval and Promulgation of Air Quality Plans; West Virginia; Amendments to the Control of Air Pollution from Combustion of Refuse,'' that is located in the ''Rules and Regulations'' section of this **Federal Register** publication. Please note that if EPA receives adverse comment on an amendment, paragraph, or section of this rule and if that provision may be severed from the remainder of the rule, EPA may adopt as final those provisions of the rule that are not the subject of an adverse comment.

Dated: March 4, 2009.

William T. Wisniewski,

Acting Regional Administrator,Region III.

[FR Doc. E9–6613 Filed 3–24–09; 8:45 am]

BILLING CODE 6560–50–P

ENVIRONMENTAL PROTECTION AGENCY

40 CFR Part 52

[EPA–R03–OAR–2009–0058; FRL–8780–3]

Approval and Promulgation of Air Quality Implementation Plans; Maryland; Reasonably Available Control Technology Requirements for Volatile Organic Compounds

AGENCY: Environmental Protection Agency (EPA).

ACTION: Proposed rule.

SUMMARY: EPA proposes to remove the conditional and limited status of its approval of the State Implementation Plan (SIP) revision submitted by the State of Maryland. The revisions pertain to Maryland's major source volatile organic compound (VOC) reasonable available control technology (RACT) regulation and minor VOC source requirements. EPA is proposing to fully approve these revisions because Maryland has satisfied the terms and conditions imposed in EPA's conditional limited approval published on September 4, 1998 and because EPA has approved all of the case-by-case RACT determinations and category specific VOC RACT and generic VOC RACT regulations. In the Final Rules section of this **Federal Register**, EPA is approving the State's SIP submittal as a direct final rule without prior proposal because the Agency views this as a noncontroversial submittal and anticipates no adverse comments. A detailed rationale for the approval is set forth in the direct final rule. If no adverse comments are received in response to this action, no further activity is contemplated. If EPA receives adverse comments, the direct final rule will be withdrawn and all public comments received will be addressed in a subsequent final rule based on this proposed rule. EPA will not institute a second comment period. Any parties interested in commenting on this action should do so at this time.

DATES: Comments must be received in writing by April 24, 2009.

ADDRESSES: Submit your comments, identified by Docket ID Number EPA–R03–OAR–2009–0058 by one of the following methods:

A. *http://www.regulations.gov.* Follow the on-line instructions for submitting comments.

B. E-mail: Fernandez.cristina@epa.gov.

C. *Mail:* EPA–R03–OAR–2009–0058, Cristina Fernandez, Chief, Air Planning Branch, Mailcode 3AP21, U.S. Environmental Protection Agency, Region III, 1650 Arch Street, Philadelphia, Pennsylvania 19103.

D. *Hand Delivery:* At the previously-listed EPA Region III address. Such deliveries are only accepted during the Docket's normal hours of operation, and special arrangements should be made for deliveries of boxed information.

Instructions: Direct your comments to Docket ID No. EPA–R03–2009–0058. EPA's policy is that all comments received will be included in the public docket without change, and may be made available online at *http://www.regulations.gov*, including any personal information provided, unless the comment includes information claimed to be Confidential Business Information (CBI) or other information whose disclosure is restricted by statute. Do not submit information that you consider to be CBI or otherwise protected through *http://www.regulations.gov* or e-mail. The *http://www.regulations.gov* Web site is an ''anonymous access'' system, which means EPA will not know your identity or contact information unless you provide it in the body of your comment. If you send an e-mail comment directly to EPA without going through *http://*

www.regulations.gov, your e-mail address will be automatically captured and included as part of the comment that is placed in the public docket and made available on the Internet. If you submit an electronic comment, EPA recommends that you include your name and other contact information in the body of your comment and with any disk or CD–ROM you submit. If EPA cannot read your comment due to technical difficulties and cannot contact you for clarification, EPA may not be able to consider your comment. Electronic files should avoid the use of special characters, any form of encryption, and be free of any defects or viruses.

Docket: All documents in the electronic docket are listed in the *http://www.regulations.gov* index. Although listed in the index, some information is not publicly available, *i.e.*, CBI or other information whose disclosure is restricted by statute. Certain other material, such as copyrighted material, is not placed on the Internet and will be publicly available only in hard copy form. Publicly available docket materials are available either electronically in *http://www.regulations.gov* or in hard copy during normal business hours at the Air Protection Division, U.S. Environmental Protection Agency, Region III, 1650 Arch Street, Philadelphia, Pennsylvania 19103. Copies of the State submittal are available at the Maryland Department of the Environment, 1800 Washington Boulevard, Suite 705, Baltimore, Maryland 21230.

FOR FURTHER INFORMATION CONTACT: Jacqueline Lewis, (215) 814–2037, or by e-mail at *lewis.jacqueline@epa.gov*.

SUPPLEMENTARY INFORMATION: For further information, please see the information provided in the direct final action, with the same title, that is located in the ''Rules and Regulations'' section of this **Federal Register** publication.

Dated: February 24, 2009.

William T. Wisniewski,

Acting Regional Administrator,Region III.

[FR Doc. E9–6662 Filed 3–24–09; 8:45 am]

BILLING CODE 6560–50–P

ENVIRONMENTAL PROTECTION AGENCY

40 CFR Part 52

[EPA–R03–OAR–2008–0595; FRL–8780–7]

Approval and Promulgation of Air Quality Implementation Plans; District of Columbia; Reasonably Available Control Technology Under the 8-Hour Ozone National Ambient Air Quality Standard

AGENCY: Environmental Protection Agency (EPA).

ACTION: Proposed rule.

SUMMARY: EPA is proposing to approve a State Implementation Plan (SIP) revision submitted by the District of Columbia. This SIP revision consists of a demonstration that the District of Columbia meets the requirements of reasonably available control technology (RACT) for nitrogen oxides (NO_X) and volatile organic compounds (VOCs) set forth by the Clean Air Act (CAA). This SIP revision demonstrates that all requirements for RACT are met either through: certification that previously adopted RACT controls in the District of Columbia's SIP that were approved by EPA under the 1-hour ozone National Ambient Air Quality Standard (NAAQS) are based on the currently available technically and economically feasible controls, and that they continue to represent RACT for the 8-hour implementation purposes; and a negative declaration demonstrating that no facilities exist in the District of Columbia for the applicable control technology guideline (CTG) categories. This action is being taken under the CAA.

DATES: Written comments must be received on or before April 24, 2009.

ADDRESSES: Submit your comments, identified by Docket ID Number EPA–R03–OAR–2008–0595 by one of the following methods:

A. *http://www.regulations.gov*. Follow the on-line instructions for submitting comments.

B. *E-mail: fernandez.cristina@epa.gov.*

C. *Mail:* EPA–R03–OAR–2008–0595, Cristina Fernandez, Chief, Air Quality Planning Branch, Mailcode 3AP21, U.S. Environmental Protection Agency, Region III, 1650 Arch Street, Philadelphia, Pennsylvania 19103.

D. *Hand Delivery:* At the previously-listed EPA Region III address. Such deliveries are only accepted during the Docket's normal hours of operation, and special arrangements should be made for deliveries of boxed information.

Instructions: Direct your comments to Docket ID No. EPA–R03–OAR–2008–0595. EPA's policy is that all comments received will be included in the public docket without change, and may be made available online at *http://www.regulations.gov*, including any personal information provided, unless the comment includes information claimed to be Confidential Business Information (CBI) or other information whose disclosure is restricted by statute. Do not submit information that you consider to be CBI or otherwise protected through *http://www.regulations.gov* or e-mail. The *http://www.regulations.gov* Web site is an ''anonymous access'' system, which means EPA will not know your identity or contact information unless you provide it in the body of your comment. If you send an e-mail comment directly to EPA without going through *http://www.regulations.gov*, your e-mail address will be automatically captured and included as part of the comment that is placed in the public docket and made available on the Internet. If you submit an electronic comment, EPA recommends that you include your name and other contact information in the body of your comment and with any disk or CD–ROM you submit. If EPA cannot read your comment due to technical difficulties and cannot contact you for clarification, EPA may not be able to consider your comment. Electronic files should avoid the use of special characters, any form of encryption, and be free of any defects or viruses.

Docket: All documents in the electronic docket are listed in the *http://www.regulations.gov* index. Although listed in the index, some information is not publicly available, i.e., CBI or other information whose disclosure is restricted by statute. Certain other material, such as copyrighted material, is not placed on the Internet and will be publicly available only in hard copy form. Publicly available docket materials are available either electronically in *http://www.regulations.gov* or in hard copy during normal business hours at the Air Protection Division, U.S. Environmental Protection Agency, Region III, 1650 Arch Street, Philadelphia, Pennsylvania 19103. Copies of the State submittal are available at the District of Columbia Department of the Environment, 51 N Street, NE., 6th Floor, Washington, DC 20002.

FOR FURTHER INFORMATION CONTACT: Patrick J. Egan, (215) 814–3167, or by e-mail at *egan.patrick@epa.gov*.

SUPPLEMENTARY INFORMATION:

I. Background

Ozone is formed in the atmosphere by photochemical reactions between VOC, NO_X, and carbon monoxide (CO) in the presence of sunlight. In order to reduce ozone concentrations in the ambient air, the CAA requires all nonattainment areas to apply controls on VOC/NO_X emission sources to achieve emission reductions.

Since the 1970's, EPA has consistently interpreted RACT to mean the lowest emission limit that a particular source is capable of meeting by the application of the control technology that is reasonably available considering technological and economic feasibility. *See, e.g.*, 72 FR 20586 at 20610 (April 25, 2007). Section 182 of the CAA sets forth two separate RACT requirements for ozone nonattainment areas. The first requirement, contained in section 182(a)(2)(A) of the CAA, and referred to as RACT fix-up, requires the correction of RACT rules for which EPA identified deficiencies before the CAA was amended in 1990. On August 4, 1992 (57 FR 34250), EPA published a final rulemaking notice approving the District of Columbia's SIP revision in order to correct the District's VOC RACT regulations and establish and require the implementation of revised SIP regulations to control VOCs.

The second requirement, set forth in section 182(b)(2) of the CAA, applies to moderate (or worse) ozone nonattainment areas and attainment areas in the ozone transport region (OTR) established pursuant to section 184 of the CAA. These areas are required to implement RACT controls on all major VOC and NO_X emission sources and on all sources and source categories covered by a CTG issued by EPA. On October 27, 1999 (64 FR 57777), EPA published a final rulemaking notice approving the District of Columbia's SIP revision as meeting the CTG RACT provisions of the CAA. Further details of The District of Columbia's RACT requirements can be found in a Technical Support Document (TSD) prepared for this rulemaking.

The Washington 1-hour Area had certain RACT requirements under section 182 for VOC and NO_X. Section 182(b)(2) of the CAA required the District of Columbia to implement RACT on all sources and source categories covered by a CTG issued by EPA. Point sources with the potential to emit 50 tons per year or more of VOCs or 100 tons per year or more of NO_X that were not covered by a CTG were also required to implement RACT. As a result of failure to meet the attainment date of November 15, 1999, the Metropolitan Washington area was reclassified from serious to severe nonattainment area for the 1-hour standard (68 FR 3410, January 24, 2003). As a result of the reclassification, the District of Columbia was required to perform RACT evaluations on point sources with the potential to emit 25 tons per year for either VOC or NO_X (69 FR 77647, December 28, 2004).

Under the 1-hour ozone NAAQS, the District of Columbia was originally classified as part of the Metropolitan Washington serious 1-hour ozone nonattainment area (Washington 1-hour Area) (56 FR 56694 at 56844, November 6, 1991). The Washington 1-hour Area is also part of the OTR. The OTR is established by section 184 of the CAA. Areas in the OTR are subject to OTR-specific RACT requirements. Section 184(b)(1)(B) of the CAA, requires the implementation of RACT with respect to all sources of VOC covered by a CTG. Additionally, section 184(b)(2) of the CAA, requires the implementation of major stationary source requirements as if the area were a moderate nonattainment area on any stationary source with a potential to emit of at least 50 tons per year of VOC or 100 tons per year of NO_X. However, the Washington 1-hour Area satisfies the section 184 RACT requirements because section 182 requirements are more stringent as a result of reclassification to a severe nonattainment area for the 1-hour standard; therefore, no additional measures for the implementation of RACT are applicable (68 FR at 3425, January 24, 2003).

Under the 8-hour ozone NAAQS, the Washington 1-hr Area, with the exception of Stafford County, Virginia was designated and classified as a moderate nonattainment area, and is therefore subject to the CAA RACT requirements in section 182(b) (69 FR 23858, April 30, 2004). The District of Columbia is required to submit to EPA a SIP revision that demonstrates how the District meets the RACT requirements under the 8-hour ozone standard.

EPA requires under the 8-hour ozone NAAQS that states meet the CAA RACT requirements, either through a certification that previously adopted RACT controls in their SIP approved by EPA under the 1-hour ozone NAAQS represent adequate RACT control levels for 8-hour attainment purposes, or through the establishment of new or more stringent requirements that represent RACT control levels. *See, Final Rule To Implement the 8–Hour Ozone National Ambient Air Quality Standard—Phase 2; Final Rule To Implement Certain Aspects of the 1990 Amendments Relating to New Source Review and Prevention of Significant Deterioration as They Apply in Carbon Monoxide, Particulate Matter and Ozone NAAQS; Final Rule for Reformulated Gasoline* (Phase 2 Rule) 70 FR 71612, 71655, November 29, 2005. Sections 172(c)(1) and 182(b)(2) of the CAA require that all SIPs satisfy the NO_X and VOCs RACT requirements that apply in areas that have not attained the NAAQS for ozone. *See* 42 U.S.C. 7502(c)(1), 42 U.S.C. 7511a(b)(2), and 42 U.S.C. 7511a(f). EPA has determined that States that have RACT provisions approved in their SIPs for 1-hour ozone nonattainment areas have several options for fulfilling the RACT requirements for the 8-hour ozone NAAQS. If a State meets certain conditions, it may certify that previously adopted 1-hour ozone RACT controls in the SIP continue to represent RACT control levels for purposes of fulfilling 8-hour ozone RACT requirements. Alternatively, a State may establish new or more stringent requirements that represent RACT control levels, either in lieu of or in conjunction with a certification.

As set forth in the preamble to the Phase 2 Rule, a certification must be accompanied by appropriate supporting information such as consideration of information received during the public comment period and consideration of new data (70 FR at 71655). This information may supplement existing RACT guidance documents that were developed for the 1-hour standard, such that the State's SIP accurately reflects RACT for the 8-hour ozone standard based on the current availability of technically and economically feasible controls. Establishment of new RACT requirements will occur when states have new stationary sources not covered by existing RACT regulations, or when new data or technical information indicates that a previously adopted RACT measure does not represent a newly available RACT control level. Another 8-hour ozone NAAQS requirement for RACT is to submit a negative declaration if there are no CTG sources or major sources of VOC and NO_X emissions in lieu of or in addition to a certification.

II. Summary of SIP Revision

On September 22, 2008, the District of Columbia Department of Environment (DDOE) submitted a revision to its SIP that addresses the requirements of RACT under the 8-hour ozone NAAQS set forth by the CAA. The District of Columbia's SIP revision is consistent with the process in the Phase 2 Rule preamble, and satisfies the requirements

of RACT set forth by the CAA under the 8-hour ozone NAAQS. The District of Columbia's SIP revision satisfies the 8-hour RACT requirements through a certification that previously adopted RACT controls in the District of Columbia's SIP that were approved by EPA under the 1-hour ozone NAAQS are based on the currently available technically and economically feasible controls, and continues to represent RACT for the 8-hour implementation purposes and a negative declaration that no CTG or non-CTG facilities exist in the District of Columbia.

A. VOC CTG RACT Controls

The District of Columbia's Regulations and Statues, under Title 20 District of Columbia Municipal Regulations (DCMR) Chapter 7, contain the District of Columbia's CTG VOC RACT controls that were implemented and approved in the District SIP under the 1-hour ozone NAAQS. Although Alternate Control Techniques (ACTs) are not regulatory documents and have no legal effect on state regulations, EPA requires that states verify that ACTs have been considered in the RACT program development process. Therefore, DDOE included ACTs in their certification of applicable RACT requirements in the submittal. Table 1 lists District of Columbia's VOC RACT controls, which the District of Columbia is certifying as meeting the 8-hour RACT requirements.

TABLE 1—DISTRICT OF COLUMBIA'S CTG AND ACT VOC RACT CONTROLS

DCMR Title 20 section	Existing stationary sources—40 CFR 52.2420(c)			
	Title of regulation	State effective date	Federal Register date for SIP approval	Citation
716	Offset Lithography	10/2/98	10/27/99	64 FR 57777
704	Stage I Vapor Recovery	3/15/85	10/27/99	64 FR 57777
708 and 742–748	Solvent Cleaning Degreasing	3/15/85	10/27/99 & 12/29/2004	64 FR 57777 & 69 FR 77906
718	Paint—Spray Booth	11/26/04	12/23/04	69 FR 76855
706	Petroleum Dry Cleaners	3/15/85	10/27/99	64 FR 57777
709.1	Cutback Asphalt	3/15/85	10/27/99	64 FR 57777
704.4	Leaks from Gasoline Tank Trucks and Vapor Collection Systems.	3/15/85	10/27/99	64 FR 57777
710, Appendix 7–1	Engraving and Plate Printing	3/15/85	10/27/99	64 FR 57777
705.4–705.14	Stage II Gasoline Vapor Recovery	3/15/85	10/27/99	64 FR 57777

DDOE also submitted a negative declaration certifying that the following VOC CTG sources do not exist in the District of Columbia and therefore there is no need for the District of Columbia to adopt CTGs for these sources. Table 2 lists VOC CTG sources in the District of Columbia's negative declaration.

TABLE 2—VOC CTG SOURCES FOR WHICH NO APPLICABLE FACILITIES EXIST IN THE DISTRICT OF COLUMBIA

Automobile and light-duty truck manufacturing.
Coating of cans, coils, paper, fabric and vinyl, metal furniture, large appliances, magnet wire, miscellaneous metal parts and products and flatwood paneling.
Storage of petroleum liquids in fixed-roof tanks.
Bulk gasoline plants.
Petroleum refinery sources.
Manufacture of synthesized pharmaceutical products, pneumatic rubber tires, vegetable oil, synthetic organic chemicals (fugitive VOCs and air oxidation) and high density polyethylene, polypropylene and polystyrene resins.
Graphic arts systems.
Storage, transportation and marketing of VOCs (fugitive VOCs from oil and gas production and natural gas and gasoline processing).
Aerospace.
Shipbuilding and repair.
Distillation or reactor or batch processes in the synthetic organic chemical manufacturing industry.
Wood furniture coatings.
Storage of petroleum liquids in external floating-roof tanks.
Bulk gasoline terminals.
Petroleum refinery equipment leaks.

B. NO_X RACT Controls

The District of Columbia's Regulations and Statutes under Title 20 DCMR Chapter 8, Section 805 contains the District of Columbia's NO_X RACT controls that were implemented and approved into the District's SIP under the 1-hour ozone SIP. Table 3 lists the District of Columbia's NO_X RACT controls.

TABLE 3—DISTRICT OF COLUMBIA'S NO_X RACT CONTROLS

DCMR Title 20 section	Title of regulation	State effective date	Federal Register date for SIP approval	Citation
805.1, 805.5	Fuel-burning equipment with an input capacity of 100 MM Btu/hr or greater.	4/16/04	12/28/04	69 FR 77645
805.5, 805.8	Fuel-burning equipment with an input capacity equal to or greater than 20MM/Btu/hr, but less than 50 MM Btu/hr.	4/16/04	12/28/04	69 FR 77645
805.1, 805.5	Fuel-burning equipment with an input capacity equal to or greater than 50 MM/Btu/hr, but less than 100 MM Btu.	4/16/04	12/28/04	69 FR 77645
805.4	Combustion turbine with an input capacity equal to or greater than 100 MM.	4/16/04	12/28/04	69 FR 77645
805.1, 709.1	Asphalt concrete plant with a potential to emit (PTE) 25 tons per year or greater.	4/16/04	12/28/04	69 FR 77645
805.1	All other fuel burning equipment with a PTE 25 tons per year of NO_X or greater.	4/16/04	12/28/04	69 FR 77645
805.1	Stationary Internal Combustion Engines	4/16/04	12/28/04	69 FR 77645

The District of Columbia has adopted the NO_X SIP Call trading program. The PEPCO-Benning Road Generating Station and GSA facilities in the District of Columbia subject to the NO_X SIP Call may be recertified as meeting NO_X RACT requirements based on the Phase 2 Rule and source-specific RACT controls, as well as their compliance with the NO_X Budget Trading Program. *See* Phase 2 Rule, 70 FR 71617, 71652, November 29, 2005.

The District of Columbia SIP revision certifies that no new or revised NO_X and VOC requirements have been adopted since the applicability threshold of 25 tons per year for major sources represent current RACT control level under the 8-hour ozone NAAQS.

III. Proposed Action

EPA is proposing to approve the District of Columbia SIP revision that addresses the requirements of RACT under the 8-hour ozone NAAQS. The District of Columbia's SIP revision was submitted on September 22, 2008. This SIP revision is based on a certification that previously adopted RACT controls in the District of Columbia's SIP that were approved by EPA under the 1-hour ozone NAAQS are based on the currently available technically and economically feasible controls, and that they continue to represent RACT for the 8-hour implementation purposes, and a negative declaration demonstrating that no facilities exist in the District of Columbia for the applicable CTG categories. EPA is soliciting public comments on the issues discussed in this document. These comments will be considered before taking final action.

IV. Statutory and Executive Order Reviews

Under the CAA, the Administrator is required to approve a SIP submission that complies with the provisions of the CAA and applicable Federal regulations. 42 U.S.C. 7410(k); 40 CFR 52.02(a). Thus, in reviewing SIP submissions, EPA's role is to approve state choices, provided that they meet the criteria of the Clean Air Act. Accordingly, this action merely proposes to approve state law as meeting Federal requirements and does not impose additional requirements beyond those imposed by state law. For that reason, this proposed action:

- Is not a ''significant regulatory action'' subject to review by the Office of Management and Budget under Executive Order 12866 (58 FR 51735, October 4, 1993);
- Does not impose an information collection burden under the provisions of the Paperwork Reduction Act (44 U.S.C. 3501 *et seq.*);
- Is certified as not having a significant economic impact on a substantial number of small entities under the Regulatory Flexibility Act (5 U.S.C. 601 *et seq.*);
- Does not contain any unfunded mandate or significantly or uniquely affect small governments, as described in the Unfunded Mandates Reform Act of 1995 (Pub. L. 104–4);
- Does not have Federalism implications as specified in Executive Order 13132 (64 FR 43255, August 10, 1999);
- Is not an economically significant regulatory action based on health or safety risks subject to Executive Order 13045 (62 FR 19885, April 23, 1997);
- Is not a significant regulatory action subject to Executive Order 13211 (66 FR 28355, May 22, 2001);
- Is not subject to requirements of Section 12(d) of the National Technology Transfer and Advancement Act of 1995 (15 U.S.C. 272 note) because application of those requirements would be inconsistent with the CAA; and
- Does not provide EPA with the discretionary authority to address, as appropriate, disproportionate human health or environmental effects, using practicable and legally permissible methods, under Executive Order 12898 (59 FR 7629, February 16, 1994).

In addition, this proposed rule, pertaining to the District of Columbia RACT under the 8-hour ozone NAAQS, does not have tribal implications as specified by Executive Order 13175 (65 FR 67249, November 9, 2000), because the SIP is not approved to apply in Indian country located in the state, and EPA notes that it will not impose substantial direct costs on tribal governments or preempt tribal law.

List of Subjects in 40 CFR Part 52

Environmental protection, Air pollution control, Nitrogen dioxide, Ozone, Reporting and recordkeeping requirements, Volatile organic compounds.

Authority: 42 U.S.C. 7401 *et seq.*

Dated: February 24, 2009.

William T. Wisniewski,

Acting Regional Administrator, Region III.

[FR Doc. E9–6593 Filed 3–24–09; 8:45 am]

BILLING CODE 6560–50–P

ENVIRONMENTAL PROTECTION AGENCY

40 CFR Part 63

[EPA–R09–OAR–2008–0759; FRL–8783–6]

Delegation of National Emission Standards for Hazardous Air Pollutants for Source Categories; State of California; Amador County Air Pollution Control District, San Diego County Air Pollution Control District

AGENCY: Environmental Protection Agency (EPA).

ACTION: Proposed rule.

SUMMARY: Pursuant to section 112(l) of the 1990 Clean Air Act, EPA granted to the Amador County Air Pollution Control District and San Diego County Air Pollution Control District delegation of specific national emission standards for hazardous air pollutants (NESHAPs) as they apply to non-major sources. This delegation was granted on September 4, 2008. EPA is proposing to amend certain regulations to reflect the current delegation status of NESHAP in California.

DATE: Any comments on this proposal must arrive by *April 24, 2009.*

ADDRESSES: Submit comments, identified by docket number EPA–R09–OAR–2008–0759, by one of the following methods:

1. *Federal eRulemaking Portal: http://www.regulations.gov.* Follow the on-line instructions.
2. *E-mail: steckel.andrew@epa.gov.*
3. *Mail or deliver:* Andrew Steckel (Air–4), U.S. Environmental Protection Agency Region IX, 75 Hawthorne Street, San Francisco, CA 94105–3901.

Instructions: All comments will be included in the public docket without change and may be made available online at *http://www.regulations.gov,* including any personal information provided, unless the comment includes Confidential Business Information (CBI) or other information whose disclosure is restricted by statute. Information that you consider CBI or otherwise protected should be clearly identified as such and should not be submitted through *http://www.regulations.gov* or e-mail. *http://www.regulations.gov* is an ''anonymous access'' system, and EPA will not know your identity or contact information unless you provide it in the body of your comment. If you send e-mail directly to EPA, your e-mail address will be automatically captured and included as part of the public comment. If EPA cannot read your comment due to technical difficulties and cannot contact you for clarification, EPA may not be able to consider your comment. Electronic files should avoid the use of special characters, any form of encryption, and be free of any defects or viruses.

Docket: The index to the docket for this action is available electronically at *http://www.regulations.gov* and in hard copy at EPA Region IX, 75 Hawthorne Street, San Francisco, California. While all documents in the docket are listed in the index, some information may be publicly available only at the hard copy location (e.g., copyrighted material), and some may not be publicly available in either location (e.g., CBI). To inspect the hard copy materials, please schedule an appointment during normal business hours with the contact listed in the **FOR FURTHER INFORMATION CONTACT** section.

FOR FURTHER INFORMATION CONTACT: Mae Wang, EPA Region IX, (415) 947–4124, *wang.mae@epa.gov.*

SUPPLEMENTARY INFORMATION: This document concerns EPA's delegation to the Amador County Air Pollution Control District and the San Diego County Air Pollution Control District for unchanged NESHAPs as they apply to non-major sources. In the Rules and Regulations section of this **Federal Register**, EPA is amending regulations to reflect the current delegation status of NESHAPs in California. EPA is taking direct final action without prior proposal because we believe this action is not controversial. If we receive adverse comments, however, we will publish a timely withdrawal of the direct final rule and address the comments in a subsequent action based on this proposed rule. Please note that if we receive adverse comments on an amendment, paragraph, or section of this rule and if that provision may be severed from the remainder of the rule, we may adopt as final those provisions of the rule that are not the subject of an adverse comment.

We do not plan to open a second comment period, so anyone interested in commenting should do so at this time. If we do not receive adverse comments, no further activity is planned. For further information, please see the direct final action.

Dated: March 9, 2009.

Deborah Jordan,

Director, Air Division, Region IX.

[FR Doc. E9–6603 Filed 3–24–09; 8:45 am]

BILLING CODE 6560–50–P

ENVIRONMENTAL PROTECTION AGENCY

40 CFR Parts 86, 87, 89, 90, 94, 98, 600, 1033, 1039, 1042, 1045, 1048, 1051, 1054, 1065

[EPA–HQ–OAR–2008–0508; FRL–8786–7]

RIN 2060–A079

Public Hearings for the Mandatory Reporting Rule for Greenhouse Gases

AGENCY: Environmental Protection Agency (EPA).

ACTION: Announcement of public hearings.

SUMMARY: The EPA is announcing two public hearings to be held for the proposed rule ''Mandatory Reporting of Greenhouse Gases,'' which will be published separately in the **Federal Register**. One hearing will be held in Arlington, Virginia (which is in the Washington, DC, area) on April 6 and 7, 2009. The other hearing will be held in Sacramento, California, on April 16, 2009.

In a separate notice of proposed rulemaking, EPA is proposing a regulation to require reporting of greenhouse gas emissions from all sectors of the economy. The rule would apply to fossil fuel suppliers and industrial gas suppliers, as well as to direct greenhouse gas emitters. The proposed rule does not require control of greenhouse gases, rather it requires only that sources above certain threshold levels monitor and report emissions. The signed notice of proposed rulemaking was posted on the EPA Web site prior to publication in the **Federal Register**, and contained the same public hearing dates presented in this announcement.

DATES: There will be two public hearings. One hearing will be held on April 6 and 7, 2009 in Arlington, VA. The other hearing will be on April 16, 2009 in Sacramento, CA. To obtain information about the public hearings or to register to speak at the hearings, please go to: *http://www.epa.gov/climatechange/emissionsghgrulemaking.html.* Alternatively, contact Carole Cook at 202–343–9263.

ADDRESSES: The hearings will be held at the following locations:

1. *Arlington:* One Potomac Yard, 2777 S. Crystal Drive, Arlington, VA 22202.
2. *Sacramento:* Sacramento Convention Center, 1400 J Street, Sacramento, CA 95814.

Written comments on the proposed rule may also be submitted to EPA electronically, by mail, by facsimile, or

through hand delivery/courier. Please refer to the notice of proposed rulemaking for the addresses and detailed instructions for submitting written comments.

When the proposed rule is published in the **Federal Register**, a complete set of documents related to the proposal will be available for public inspection at the EPA Docket Center, located at 1301 Constitution Avenue, NW., Room 3334, Washington, DC between 8:30 a.m. and 4:30 p.m., Monday through Friday, excluding legal holidays. A reasonable fee may be charged for copying. Documents are also available through the electronic docket system at *http://www.regulations.gov.*

The EPA Web site for the rulemaking, which includes information about the public hearings and a copy of the signed proposal (which is essentially the same as the proposal that will be published) can be found at: *http://www.epa.gov/climatechange/emissions/ghgrulemaking.html.*

FOR FURTHER INFORMATION CONTACT: Carole Cook, Climate Change Division, Office of Atmospheric Programs (MC–6207J), Environmental Protection Agency, 1200 Pennsylvania Ave., NW., Washington, DC 20460; *telephone number:* (202) 343–9263; *fax number:* (202) 343–2342; *e-mail address: GHGReportingRule@epa.gov.*

SUPPLEMENTARY INFORMATION: The proposal for which EPA is holding the public hearings will be published separately in the **Federal Register**. A copy of the signed notice of proposed rulemaking, which is essentially the same as the proposal that will be published in the **Federal Register**, has been available since March 10, 2009, on the following Web site: *http://www.epa.gov/climatechange/emissions/ghgrulemaking.html.* The notice on the Web site contains the same public hearing dates, addresses, and registration information presented in this announcement of public hearings.

The public hearings will provide interested parties the opportunity to present data, views, or arguments concerning the proposed rules. The EPA may ask clarifying questions during the oral presentations, but will not respond to the presentations at that time. Written statements and supporting information submitted during the comment period will be considered with the same weight as any oral comments and supporting information presented at the public hearings. Written comments must be received by the last day of the comment period, as specified in the proposal of the mandatory greenhouse gas reporting rule.

The two public hearings will be held on April 6 and 7 in Arlington, VA, and on April 16, 2009, in Sacramento, CA. The public hearing in Arlington, VA, will begin each day at 9 a.m. and will end at 8 p.m. on April 6 and at 5 p.m. on April 7. The public hearing in Sacramento, CA, will begin at 9 a.m. and will end at 8 p.m. (local time).

To obtain information about the public hearings or to register to speak at the hearings, please go to: *http://www.epa.gov/climatechange/emissions/ghgrulemaking.html.* Alternatively, contact Carole Cook at 202–343–9263.

Verbatim transcripts of the hearings and written statements will be included in the rulemaking docket.

How Can I Get Copies of This Document, the Proposed Rule, and Other Related Information?

The EPA has established a docket for this action under Docket ID No. EPA–HQ–OAR–2008–0508. The EPA has also developed a Web site for the proposed greenhouse gas reporting rule, including the notice of proposed rulemaking, at the address given above. Please refer to the notice of proposed rulemaking for detailed information on accessing information related to the proposal.

Dated: March 19, 2009.

Brian McLean,

Director, Office of Atmospheric Programs.

[FR Doc. E9–6602 Filed 3–24–09; 8:45 am]

BILLING CODE 6560–50–P

ENVIRONMENTAL PROTECTION AGENCY

40 CFR Part 271

[EPA–R06–RCRA–2008–0756–; FRL–8784–8]

New Mexico: Final Authorization of State Hazardous Waste Management Program Revisions

AGENCY: Environmental Protection Agency (EPA).

ACTION: Proposed rule.

SUMMARY: The State of New Mexico has applied to EPA for Final authorization of the changes to its hazardous waste program under the Resource Conservation and Recovery Act (RCRA). EPA proposes to grant Final authorization to the State of New Mexico. In the ''Rules and Regulations'' section of this **Federal Register**, EPA is authorizing the changes by an immediate final rule. EPA did not make a proposal prior to the immediate final rule because we believe this action is not controversial and do not expect comments that oppose it. We have explained the reasons for this authorization in the preamble to the immediate final rule. Unless we get written comments which oppose this authorization during the comment period, the immediate final rule will become effective on the date it establishes, and we will not take further action on this proposal. If we receive comments that oppose this action, we will withdraw the immediate final rule and it will not take effect. We will then respond to public comments in a later final rule based on this proposal. You may not have another opportunity for comment. If you want to comment on this action, you must do so at this time.

DATES: Send your written comments by April 24, 2009.

ADDRESSES: Send written comments to Alima Patterson, Region 6, Regional Authorization Coordinator, (6PD–O), Multimedia Planning and Permitting Division, at the address shown below. You can examine copies of the materials submitted by the State of New Mexico during normal business hours at the following locations: New Mexico Environment Department, 2905 Rodeo Park Drive East, Building 1, Santa Fe, New Mexico 87505–6303, phone number (505) 476–6035 and EPA, Region 6, 1445 Ross Avenue, Dallas, Texas 75202–2733, phone number (214) 665–8533; or Comments may also be submitted electronically or through hand delivery/courier; please follow the detailed instructions in the **ADDRESSES** section of the immediate final rule which is located in the Rules section of this **Federal Register**.

FOR FURTHER INFORMATION CONTACT: Alima Patterson (214) 665–8533.

SUPPLEMENTARY INFORMATION: For additional information, please see the immediate final rule published in the ''Rules and Regulations''section of this **Federal Register**.

Dated: March 5, 2009.

Lawrence E. Starfield,

Acting Regional Administrator, Region 6.

[FR Doc. E9–6681 Filed 3–24–09; 8:45 am]

BILLING CODE 6560–50–P

DEPARTMENT OF HOMELAND SECURITY

Federal Emergency Management Agency

44 CFR Part 67

[Docket ID FEMA–2008–0020; Internal Agency Docket No. FEMA–B–1041]

Proposed Flood Elevation Determinations

AGENCY: Federal Emergency Management Agency, DHS.

ACTION: Proposed rule.

SUMMARY: Comments are requested on the proposed Base (1 percent annual-chance) Flood Elevations (BFEs) and proposed BFE modifications for the communities listed in the table below. The purpose of this notice is to seek general information and comment regarding the proposed regulatory flood elevations for the reach described by the downstream and upstream locations in the table below. The BFEs and modified BFEs are a part of the floodplain management measures that the community is required either to adopt or show evidence of having in effect in order to qualify or remain qualified for participation in the National Flood Insurance Program (NFIP). In addition, these elevations, once finalized, will be used by insurance agents, and others to calculate appropriate flood insurance premium rates for new buildings and the contents in those buildings.

DATES: Comments are to be submitted on or before June 23, 2009.

ADDRESSES: The corresponding preliminary Flood Insurance Rate Map (FIRM) for the proposed BFEs for each community are available for inspection at the community's map repository. The respective addresses are listed in the table below.

You may submit comments, identified by Docket No. FEMA–B–1041, to William R. Blanton, Jr., Chief, Engineering Management Branch, Mitigation Directorate, Federal Emergency Management Agency, 500 C Street, SW., Washington, DC 20472, (202) 646–3151, or (e-mail) *bill.blanton@dhs.gov*.

FOR FURTHER INFORMATION CONTACT: William R. Blanton, Jr., Chief, Engineering Management Branch, Mitigation Directorate, Federal Emergency Management Agency, 500 C Street, SW., Washington, DC 20472, (202) 646–3151 or (e-mail) *bill.blanton@dhs.gov*.

SUPPLEMENTARY INFORMATION: The Federal Emergency Management Agency (FEMA) proposes to make determinations of BFEs and modified BFEs for each community listed below, in accordance with section 110 of the Flood Disaster Protection Act of 1973, 42 U.S.C. 4104, and 44 CFR 67.4(a).

These proposed BFEs and modified BFEs, together with the floodplain management criteria required by 44 CFR 60.3, are the minimum that are required. They should not be construed to mean that the community must change any existing ordinances that are more stringent in their floodplain management requirements. The community may at any time enact stricter requirements of its own, or pursuant to policies established by other Federal, State, or regional entities. These proposed elevations are used to meet the floodplain management requirements of the NFIP and are also used to calculate the appropriate flood insurance premium rates for new buildings built after these elevations are made final, and for the contents in these buildings.

Comments on any aspect of the Flood Insurance Study and FIRM, other than the proposed BFEs, will be considered. A letter acknowledging receipt of any comments will not be sent.

National Environmental Policy Act. This proposed rule is categorically excluded from the requirements of 44 CFR part 10, Environmental Consideration. An environmental impact assessment has not been prepared.

Regulatory Flexibility Act. As flood elevation determinations are not within the scope of the Regulatory Flexibility Act, 5 U.S.C. 601–612, a regulatory flexibility analysis is not required.

Executive Order 12866, Regulatory Planning and Review. This proposed rule is not a significant regulatory action under the criteria of section 3(f) of Executive Order 12866, as amended.

Executive Order 13132, Federalism. This proposed rule involves no policies that have federalism implications under Executive Order 13132.

Executive Order 12988, Civil Justice Reform. This proposed rule meets the applicable standards of Executive Order 12988.

List of Subjects in 44 CFR Part 67

Administrative practice and procedure, Flood insurance, Reporting and recordkeeping requirements.

Accordingly, 44 CFR part 67 is proposed to be amended as follows:

PART 67—[AMENDED]

1. The authority citation for part 67 continues to read as follows:

Authority: 42 U.S.C. 4001 *et seq.*; Reorganization Plan No. 3 of 1978, 3 CFR, 1978 Comp., p. 329; E.O. 12127, 44 FR 19367, 3 CFR, 1979 Comp., p. 376.

§ 67.4 [Amended]

2. The tables published under the authority of § 67.4 are proposed to be amended as follows:

Flooding source(s)	Location of referenced elevation**	* Elevation in feet (NGVD) + Elevation in feet (NAVD) # Depth in feet above ground ∧ Elevation in meters (MSL)		Communities affected
		Effective	Modified	
Lamar County, Alabama, and Incorporated Areas				
Driver Creek	Approximately 3,318 feet upstream of confluence of Luxapallila Creek and Driver Creek.	None	+261	Unincorporated Areas of Lamar County.
	Approximately 3,810 feet upstream of confluence of Luxapallila Creek and Driver Creek.	None	+265	

* National Geodetic Vertical Datum.
+ North American Vertical Datum.
# Depth in feet above ground.
∧ Mean Sea Level, rounded to the nearest 0.1 meter.

Flooding source(s)	Location of referenced elevation**	* Elevation in feet (NGVD) + Elevation in feet (NAVD) # Depth in feet above ground ∧ Elevation in meters (MSL)		Communities affected
		Effective	Modified	

** BFEs to be changed include the listed downstream and upstream BFEs, and include BFEs located on the stream reach between the referenced locations above. Please refer to the revised Flood Insurance Rate Map located at the community map repository (see below) for exact locations of all BFEs to be changed.

Send comments to William R. Blanton, Jr., Chief, Engineering Management Branch, Mitigation Directorate, Federal Emergency Management Agency, 500 C Street SW., Washington, DC 20472.

ADDRESSES

Unincorporated Areas of Lamar County

Maps are available for inspection at 4690 Hwy 17, Vernon, AL 35592.

Marion County, Alabama, and Incorporated Areas

Unnamed Tributary to Reedy Creek.	At the confluence of Reedy Creek	None	+458	Town of Gu-Win.
	Approximately 1,825 feet upstream of the confluence with Reedy Creek.	None	+459	

* National Geodetic Vertical Datum.
+ North American Vertical Datum.
# Depth in feet above ground.
∧ Mean Sea Level, rounded to the nearest 0.1 meter.

** BFEs to be changed include the listed downstream and upstream BFEs, and include BFEs located on the stream reach between the referenced locations above. Please refer to the revised Flood Insurance Rate Map located at the community map repository (see below) for exact locations of all BFEs to be changed.

Send comments to William R. Blanton, Jr., Chief, Engineering Management Branch, Mitigation Directorate, Federal Emergency Management Agency, 500 C Street SW., Washington, DC 20472.

ADDRESSES

Town of Gu-Win

Maps are available for inspection at 4835 U.S. Hwy 43, Gu-Win, AL 35563.

Lee County, Illinois, and Incorporated Areas

Kyte River	Approximately 1,080 feet west of Thorpe Road	None	+770	Unincorporated Areas of Lee County.
	Approximately 125 feet west of Illinois Route 251	None	+771	

* National Geodetic Vertical Datum.
+ North American Vertical Datum.
# Depth in feet above ground.
∧ Mean Sea Level, rounded to the nearest 0.1 meter.

** BFEs to be changed include the listed downstream and upstream BFEs, and include BFEs located on the stream reach between the referenced locations above. Please refer to the revised Flood Insurance Rate Map located at the community map repository (see below) for exact locations of all BFEs to be changed.

Send comments to William R. Blanton, Jr., Chief, Engineering Management Branch, Mitigation Directorate, Federal Emergency Management Agency, 500 C Street SW., Washington, DC 20472.

ADDRESSES

Unincorporated Areas of Lee County

Maps are available for inspection at Lee County Zoning Office, Old Lee County Courthouse, Third Floor, 112 E. Second Street, Dixon, IL 61021.

St. John The Baptist Parish, Louisiana, and Incorporated Areas

Lake Lac Des Alemands	Entire shoreline and extending approximately 6,000 feet landward of the entire lake.	None	+6–7	Unincorporated Areas of St. John The Baptist Parish.
	Starting with the Texas and Pacific Railroad and continuing both East and West to the Parish Lines and South to Lake Lac Des Alemands and the Southern Parish line. Also, two small areas North of the railroad are included.	None	+3–6	
Lake Maurepas	Along the shoreline of Lake Maurepas starting at the Parish Line and continuing along the coastline East to Lake Pontchartrain and extending landward approximately 2,000 feet.	None	+9–12	Unincorporated Areas of St. John The Baptist Parish.

Flooding source(s)	Location of referenced elevation**	* Elevation in feet (NGVD) + Elevation in feet (NAVD) # Depth in feet above ground ∧ Elevation in meters (MSL)		Communities affected
		Effective	Modified	
	Covering an area extending West from Interstate 55 North and following the shoreline of Lake Maurepas to the Parish boundary and extending south to approximately Highway 61.	None	+3–13	
Lake Pontchartrain	Covering an area extending East from Interstate 55 North to the Western Coast of Lake Pontchartrain and extending North from I–10 to the Parish Boundary on Interstate 55 North.	None	+10–13	Unincorporated Areas of St. John The Baptist Parish.
	Along the shoreline of Lake Pontchartrain starting at the Northern peninsula and continuing south to Interstate 10 and extending landward approximately 6,000 feet.	None	+12–17	

* National Geodetic Vertical Datum.
+ North American Vertical Datum.
# Depth in feet above ground.
∧ Mean Sea Level, rounded to the nearest 0.1 meter.
** BFEs to be changed include the listed downstream and upstream BFEs, and include BFEs located on the stream reach between the referenced locations above. Please refer to the revised Flood Insurance Rate Map located at the community map repository (see below) for exact locations of all BFEs to be changed.

Send comments to William R. Blanton, Jr., Chief, Engineering Management Branch, Mitigation Directorate, Federal Emergency Management Agency, 500 C Street SW., Washington, DC 20472.

ADDRESSES

Unincorporated Areas of St. John The Baptist Parish

Maps are available for inspection at 1801W. Airline Hwy., La Place, LA 70068.

Wayne County, Michigan, and Incorporated Areas

Apple Run/Horner Drain	Confluence with Sines Drain	None	+688	Township of Canton.
	Downstream side of Beck Road	None	+689	Township of Van Buren.
Bakewell Tile Extension Bell Branch.	Confluence with Bell Branch	None	+671	City of Livonia.
	Downstream side of Newburgh Road	None	+672	
	Upstream side of Ellen Drive	None	+654	City of Livonia.
	Downstream side of 5 Mile Road	None	+671	
Belleville Lake	Entire shoreline of Belleville Lake	None	+653	City of Belleville, Township of Van Buren.
Bingell Drain	Upstream side of Hannan Road	None	+662	Township of Canton.
	Approximately 30 feet upstream of Hannan Road	None	+663	
Bird Marsh Drain	Confluence with Day and Cutter Drain	None	+666	Township of Sumpter.
	Downstream side of Judd Road	None	+676	
Blakely Drain	Approximately 575 feet west of Telegraph Road and just south of Pennsylvania Road.	None	+610	Charter Township of Brownstown.
	Approximately 400 feet west of Beech Daly Road and just south of Pennsylvania Road.	None	+612	
	Just upstream of Pennsylvania Road	None	+615	
	Approximately 50 feet upstream of Pennsylvania Road	None	+615	
Blakely Drain	Upstream side of King Road	None	+593	City of Riverview.
	Approximately 300 feet east of Cascade Drive	None	+593	
Bradshaw Drain	Upstream side of Oakville-Waltz Road	None	+642	Township of Sumpter.
	Downstream side of Rawsonville Road	None	+667	
Branch No. 1 Mosquito Drain	Confluence with Mosquito Drain	None	+624	Township of Sumpter.
	Approximately 0.7 mile upstream of Arkona Road	None	+627	Township of Huron.
Brooks Drain	Confluence with Huron River	None	+616	Township of Sumpter.
	Downstream side of Haggerty Road	None	+655	
Brownstown Creek	Approximately 1500 feet upstream of Gudith Road	None	+599	Charter Township of Brownstown, City of Woodhaven.
	Approximately 0.7 mile downstream of Sibley Road	None	+615	
Brownstown Creek	Approximately 500 feet downstream of Gibraltar Road	+577	+578	City of Gibraltar.
	Approximately 700 feet upstream of Gibraltar Road	+577	+578	
Carroll Drain	Confluence with Burnap Drain	None	+631	Township of Sumpter.
	Downstream side of Martinsville Road	None	+638	
Clark-Morey Drain	Confluence with Lords Drain	None	+631	Township of Sumpter.
	Approximately 200 feet downstream of Arkona Road	None	+645	
Day and Cutter Drain	Confluence with Bradshaw Drain	None	+666	Township of Sumpter.

Flooding source(s)	Location of referenced elevation**	* Elevation in feet (NGVD) + Elevation in feet (NAVD) # Depth in feet above ground ∧ Elevation in meters (MSL)		Communities affected
		Effective	Modified	
	Downstream side of Judd Road	None	+674	
Deacon Drain	Approximately 75 feet northeast of the intersection of Ethel Street and Outer Drive.	None	+583	City of Detroit.
	Approximately 175 feet northeast of the intersection of Bassett Street and Outer Drive.	None	+583	
Denton & Branch Drain	Confluence with Apple Run	None	+688	Township of Van Buren.
	Approximately 1,650 feet upstream of Beck Road	None	+688	
Desbrow Drain	Upstream side of Oakville-Waltz Road	None	+625	Township of Sumpter.
	Downstream side of Judd Road	None	+674	
Detroit River	Confluence with Lake Erie	+577	+578	Charter Township of Brownstown, City of Detroit, City of Ecorse, City of Gibraltar, City of Grosse Pointe Park, City of River Rouge, City of Wyandotte, Township of Grosse Ile.
	Confluence with Lake St. Clair	+578	+579	
Ecorse Creek	Confluence with Detroit River	+577	+578	City of Ecorse, City of Lincoln Park.
	Confluence with North Branch Ecorse Creek and South Branch Ecorse Creek.	+577	+578	
Ecorse Creek	Confluence with Detroit River	+577	+578	City of Wyandotte.
	Approximately 200 feet downstream of confluence with Sexton-Kilfoil Drain.	+577	+578	
Fellows Creek	At confluence with Lower River Rouge	None	+654	Township of Canton.
	Approximately 175 feet downstream of Canton Center Road.	+687	+688	
Frank and Poet Drain	Approximately 1,150 feet downstream of Gibraltar Road	+577	+578	City of Gibraltar.
	Approximately 225 feet downstream of Railroad	+577	+578	
Frank and Poet Drain	Approximately 80 feet southeast of Allen Road and Orchard Avenue.	None	+601	City of Southgate.
	Approximately 275 feet southeast of Allen Road and Orchard Avenue.	None	+601	
Frank and Poet Drain	Upstream side of Eureka Road	+606	+605	City of Taylor.
	Downstream side of Inkster Road	+624	+623	
Frenchman Creek	Confluence with Detroit River	+577	+578	Township of Grosse Ile.
	Approximately 0.7 mile upstream of Groh Road	+577	+578	
Green Meadow Drain	Confluence with Tonquish Creek	+683	+684	Township of Canton.
	Approximately 850 feet upstream of Morton Taylor Road	+687	+686	
Handler Drain	Confluence with Trenton Channel	+577	+578	City of Gibraltar, City of Trenton.
	Upstream side of Toledo Avenue	+577	+578	
Head Drain	Downstream side of Bemis Road	None	+670	Township of Sumpter, Township of Van Buren.
	Downstream side of Lohr Road	None	+684	
Huntington Creek	Confluence with Trenton Channel	+577	+579	City of Riverview.
	Approximately 1,250 feet downstream of Electric Avenue	+578	+579	
Huntington Creek	Approximately 60 feet east of the intersection of Pennsylvania Avenue and 13th Street.	None	+583	City of Wyandotte.
	Approximately 50 feet east of the intersection of Pennsylvania Avenue and 13th Street.	None	+583	
Huron River	Confluence with Lake Erie	+577	+578	Charter Township of Brownstown.
	Approximately 0.75 mile northwest of the intersection of Jefferson Avenue and Harbin Road.	+577	+578	
Huron River	Approximately 1,450 feet southeast of the intersection of Huron River Drive and River Lane.	None	+597	Township of Huron.
	Approximately 1,300 feet southeast of the intersection of Huron River Drive and River Lane.	None	+597	
Jefferson Ave Diversion	Confluence with Trenton Channel	+577	+579	City of Riverview.
	Downstream side of Jefferson Avenue	+578	+579	
Johnson Drain	Approximately 300 feet upstream of Fairbrook	None	+788	Charter Township of Plymouth, Township of Northville.
	Approximately 0.8 mile upstream of 5 Mile Road	+841	+840	

Flooding source(s)	Location of referenced elevation**	* Elevation in feet (NGVD) + Elevation in feet (NAVD) # Depth in feet above ground ∧ Elevation in meters (MSL)		Communities affected
		Effective	Modified	
Johnson Drain Tributary	Confluence with Johnson Drain	None	+811	Township of Northville.
	Approximately 0.5 mile upstream of 7 Mile Road	None	+857	
Jones Drain	Confluence with Huron River	+577	+578	Charter Township of Brownstown.
	Downstream side of Main Park Road	+577	+578	
King Drain	Confluence with North Branch Swan Creek	None	+633	Township of Sumpter.
	Approximately 0.6 mile downstream of Judd Road	None	+637	
Lake Erie	Entire shoreline of Lake Erie within Wayne County	+577	+578	Charter Township of Brownstown.
Lake St. Clair	Entire shoreline of Lake St. Clair within Wayne County	None	+579	City of Grosse Pointe Farms, City of Grosse Pointe.
Lake St. Clair	Entire shoreline of Lake St. Clair within Wayne County	+578	+579	Village of Grosse Pointe Shores, City of Grosse Pointe Park.
Lamke Drain	Confluence with Bradshaw Drain	None	+647	Township of Sumpter.
	Downstream side of Sherwood Road	None	+651	
Lords Drain	Confluence with Disbrow Drain	None	+628	Township of Sumpter.
	Downstream side of Sumpter Road	None	+639	
Lower River Rouge	Upstream side of Hannan Road	None	+653	Township of Canton.
	Upstream side of Ridge Road	None	+713	
Marsh Creek	Approximately 400 feet south of Van Horn Road	None	+586	City of Trenton.
	Upstream side of Van Horn Road	None	+586	
	Approximately 1400 feet northwest of the intersection of Marian Drive and Longmeadow Drive.	None	+589	
McClaughrey Drain	Downstream side of Van Born Road	None	+663	City of Wayne, City of Romulus, Township of Van Buren.
	Downstream side of N I–275	None	+669	
Morrison Drain	Confluence with Silver Creek	+577	+578	Charter Township of Brownstown.
	Approximately 700 feet downstream of Woodruff Road	+577	+578	
Mosquito Drain	Upstream side of Clark Road	None	+624	Township of Huron, Township of Sumpter.
	Downstream side of Haggerty Road	None	+628	
Mott Drain	Downstream side of Sheldon Road	None	+672	Township of Canton.
	Confluence with Lower River Rouge	None	+672	
No. 1 Drain	Confluence with North Branch Swan Creek	None	+648	Township of Sumpter.
	Approximately 110 feet downstream of Willis Road	None	+652	
No. 3 Drain	Confluence with North Branch Swan Creek	None	+656	Township of Sumpter.
	Downstream side of Clay Road	None	+658	
North Branch Ecorse Creek	Confluence with Ecorse Creek	+577	+578	City of Ecorse, City of Lincoln Park.
	Approximately 1,300 feet downstream of Mill Street	+577	+578	
North Branch Ecorse Creek	Approximately 90 feet downstream of Frank Avenue	None	+591	City of Melvindale.
	Approximately 500 feet east of Enterprise Drive	None	+594	
North Branch Swan Creek (lower).	Downstream side of Clark Road	None	+626	Township of Huron, Township of Sumpter.
	Downstream side of Judd Road	None	+645	
North Branch Swan Creek (upper).	Upstream side of Elwell Road	None	+677	Township of Sumpter, Township of Van Buren.
	Downstream side of Rawsonville Road	None	+689	
Olmstead Drain	Confluence with Smith Creek	None	+587	City of Flat Rock.
	Downstream side of Olmstead Road	None	+587	
Pickering Drain	Confluence with North Branch Swan Creek	None	+632	Township of Sumpter.
	Upstream side of Haggerty Road	None	+632	
River Rouge	Confluence with Detroit River	None	+578	City of Detroit.
	Approximately 0.5 mile upstream of Jefferson Avenue	None	+578	
River Rouge	Confluence with Detroit River	+577	+578	City of River Rouge.
	Approximately 0.5 mile upstream of Jefferson Avenue	+577	+578	
Shortcut Canal	Confluence with Detroit River	+577	+578	City of River Rouge.
	Confluence with River Rouge	+577	+578	
Silver Creek	Approximately 400 feet downstream of Jefferson Avenue	+577	+578	Charter Township of Brownstown, City of Rockwood
	Downstream side of Railroad	+577	+578	

Flooding source(s)	Location of referenced elevation**	* Elevation in feet (NGVD) + Elevation in feet (NAVD) # Depth in feet above ground ∧ Elevation in meters (MSL)		Communities affected
		Effective	Modified	
Silver Creek	Approximately 1,300 feet southwest of the intersection of Woodruff Road and Torry Avenue.	None	+586	City of Rockwood.
	Approximately 1,650 feet southwest of the intersection of Woodruff Road and Torry Avenue.	None	+586	
Sines Drain	Confluence with Lower River Rouge	None	+667	Township of Canton, Township of Van Buren.
	Downstream side of Mott Road	None	+707	
Smith Creek (lower)	Confluence with Silver Creek	+577	+578	Charter Township of Brownstown, City of Rockwood.
	Downstream side of Huron River Drive	+577	+578	
Smith Creek (lower)	Upstream side of S I–75	None	+587	City of Flat Rock, Charter Township of Brownstown, City of Woodhaven.
	Approximately 875 feet downstream of Telegraph Road	None	+599	
Smith Creek (upper)	Upstream side of Beech Daly Road	None	+607	Charter Township of Brownstown, Township of Huron.
	Upstream side of Inkster Road	None	+616	
Smith Drain	Upstream side of Puritan Street	None	+617	City of Detroit.
	Approximately 160 feet upstream of Puritan Street	None	+617	
South Branch Tonquish Creek.	Upstream side of Main Street	+707	+703	Charter Township of Plymouth, City of Plymouth.
	Downstream of Beck Road	None	+790	
Thorofare Canal	Confluence with Trenton Channel	+577	+578	Township of Grosse Ile.
	Confluence with Detroit River	+577	+578	
Tonquish Creek	Approximately 300 feet downstream of Holiday Boulevard	None	+660	Township of Canton, Charter Township of Plymouth, City of Plymouth.
	Downstream side of Territorial Road	None	+770	
Tonquish Creek	Approximately 1,100 feet downstream of Wayne Road	None	+636	City of Livonia.
	Approximately 700 feet downstream of Wayne Road	None	+636	
Travis Drain	Confluence with Willow Creek	None	+680	Township of Canton.
	Downstream side of Sheldon Road	None	+680	
Trenton Channel	Confluence with Lake Erie	+577	+578	City of Gibraltar, City of Riverview, City of Trenton, City of Wyandotte, Township of Grosse Ile.
	Confluence with Detroit River	+577	+579	
Upper River Rouge	Confluence with River Rouge	None	+617	City of Detroit, Township of Redford.
	Approximately 1,800 feet upstream of 6 Mile Road	+626	+625	
Weightman and Branch Drain	Confluence with North Branch Swan Creek	None	+638	Township of Sumpter.
	Approximately 0.5 mile upstream of North Branch Swan Creek.	None	+638	
Willow Creek	Approximately 1,800 feet upstream of Lotz Road	+668	+669	Township of Canton.
	Downstream side of Canton Center Road	+707	+702	

* National Geodetic Vertical Datum.
+ North American Vertical Datum.
# Depth in feet above ground.
∧ Mean Sea Level, rounded to the nearest 0.1 meter.
** BFEs to be changed include the listed downstream and upstream BFEs, and include BFEs located on the stream reach between the referenced locations above. Please refer to the revised Flood Insurance Rate Map located at the community map repository (see below) for exact locations of all BFEs to be changed.

Send comments to William R. Blanton, Jr., Chief, Engineering Management Branch, Mitigation Directorate, Federal Emergency Management Agency, 500 C Street SW., Washington, DC 20472.

ADDRESSES

Charter Township of Brownstown
Maps are available for inspection at 21313 Telegraph Road, Brownstown, MI 48183.

Charter Township of Plymouth
Maps are available for inspection at 9955 North Haggerty Road, Plymouth, MI 48170.

City of Belleville
Maps are available for inspection at 6 Main Street, Belleville, MI 49615.

City of Detroit

Flooding source(s)	Location of referenced elevation**	* Elevation in feet (NGVD) + Elevation in feet (NAVD) # Depth in feet above ground ∧ Elevation in meters (MSL)		Communities affected
		Effective	Modified	

Maps are available for inspection at 660 Woodward Avenue, Suite 1800, Detroit, MI 48226.

City of Ecorse
Maps are available for inspection at 3869 West Jefferson Avenue, Ecorse, MI 48229.

City of Flat Rock
Maps are available for inspection at 25500 Gibraltar Road, Flat Rock, MI 48134.

City of Gibraltar
Maps are available for inspection at 29450 Munro Avenue, Gibraltar, MI 48173.

City of Grosse Pointe
Maps are available for inspection at 17147 Maumee Avenue, Grosse Pointe, MI 48230.

City of Grosse Pointe Farms
Maps are available for inspection at 90 Kerby Road, Grosse Pointe Farms, MI 48236.

City of Grosse Pointe Park
Maps are available for inspection at 15115 East Jefferson Avenue, Grosse Pointe Park, MI 48230.

City of Lincoln Park
Maps are available for inspection at 500 Southfield Road, Lincoln Park, MI 48146.

City of Livonia
Maps are available for inspection at 33000 Civic Center Drive, Livonia, MI 48154.

City of Melvindale
Maps are available for inspection at 3100 Oakwood Boulevard, Melvindale, MI 48122.

City of Plymouth
Maps are available for inspection at 201 South Main Street, Plymouth, MI 48170.

City of River Rouge
Maps are available for inspection at 10600 W. Jefferson Avenue, River Rouge, MI 48218.

City of Riverview
Maps are available for inspection at 14100 Civic Park Drive, Riverview, MI 48193.

City of Rockwood
Maps are available for inspection at 32409 Fort Road, Rockwood, MI 48173.

City of Romulus
Maps are available for inspection at 11111 Wayne Road, Romulus, MI 48174.

City of Southgate
Maps are available for inspection at 14400 Dix-Toledo Highway, Southgate, MI 48195.

City of Taylor
Maps are available for inspection at 25605 Northline Road, Taylor, MI 48180.

City of Trenton
Maps are available for inspection at 2674 West Jefferson, Trenton, MI 48183.

City of Wayne
Maps are available for inspection at 4001 South Wayne Road, Wayne, MI 48184.

City of Woodhaven
Maps are available for inspection at 21869 West Road, Woodhaven, MI 48183.

City of Wyandotte
Maps are available for inspection at 3131 Biddle Avenue, Wyandotte, MI 48192.

Township of Canton
Maps are available for inspection at 1150 South Canton Center Road, Canton, MI 48188.

Township of Grosse Ile
Maps are available for inspection at 9601 Groh Road, Grosse Ile, MI 48138.

Township of Huron
Maps are available for inspection at 22950 Huron River Drive, New Boston, MI 48164.

Township of Northville
Maps are available for inspection at 44405 Six Mile Road, Northville, MI 48168.

Township of Redford
Maps are available for inspection at 12200 Beech Daly Road, Redford, MI 48239.

Township of Sumpter
Maps are available for inspection at 23480 Sumpter Road, Belleville, MI 48111.

Township of Van Buren
Maps are available for inspection at 46425 Tyler Road, Belleville, MI 48111.

Village of Grosse Pointe Shores
Maps are available for inspection at 795 Lake Shore Road, Grosse Pointe Shores, MI 48236.

(Catalog of Federal Domestic Assistance No. 97.022, ''Flood Insurance.'')

Dated: February 26, 2009.

Michael K. Buckley,

Acting Assistant Administrator, Mitigation Directorate, Department of Homeland Security, Federal Emergency Management Agency.

[FR Doc. E9–6586 Filed 3–24–09; 8:45 am]

BILLING CODE 9110–12–P

DEPARTMENT OF HOMELAND SECURITY

Federal Emergency Management Agency

44 CFR Part 67

[Docket ID FEMA–2008–0020; Internal Agency Docket No. FEMA–B–1032]

Proposed Flood Elevation Determinations

AGENCY: Federal Emergency Management Agency, DHS.

ACTION: Proposed rule.

SUMMARY: Comments are requested on the proposed Base (1 percent annual-chance) Flood Elevations (BFEs) and proposed BFE modifications for the communities listed in the table below. The purpose of this notice is to seek general information and comment regarding the proposed regulatory flood elevations for the reach described by the downstream and upstream locations in the table below. The BFEs and modified BFEs are a part of the floodplain management measures that the community is required either to adopt or show evidence of having in effect in order to qualify or remain qualified for participation in the National Flood Insurance Program (NFIP). In addition, these elevations, once finalized, will be used by insurance agents, and others to calculate appropriate flood insurance premium rates for new buildings and the contents in those buildings.

DATES: Comments are to be submitted on or before June 23, 2009.

ADDRESSES: The corresponding preliminary Flood Insurance Rate Map (FIRM) for the proposed BFEs for each community are available for inspection at the community's map repository. The respective addresses are listed in the table below.

You may submit comments, identified by Docket No. FEMA–B–1032, to William R. Blanton, Jr., Chief, Engineering Management Branch, Mitigation Directorate, Federal Emergency Management Agency, 500 C Street SW., Washington, DC 20472, (202) 646–3151, or (e-mail) *bill.blanton@dhs.gov*.

FOR FURTHER INFORMATION CONTACT: William R. Blanton, Jr., Chief, Engineering Management Branch, Mitigation Directorate, Federal Emergency Management Agency, 500 C Street SW., Washington, DC 20472, (202) 646–3151 or (e-mail) *bill.blanton@dhs.gov*.

SUPPLEMENTARY INFORMATION: The Federal Emergency Management Agency (FEMA) proposes to make determinations of BFEs and modified BFEs for each community listed below, in accordance with section 110 of the Flood Disaster Protection Act of 1973, 42 U.S.C. 4104, and 44 CFR 67.4(a).

These proposed BFEs and modified BFEs, together with the floodplain management criteria required by 44 CFR 60.3, are the minimum that are required. They should not be construed to mean that the community must change any existing ordinances that are more stringent in their floodplain management requirements. The community may at any time enact stricter requirements of its own, or pursuant to policies established by other Federal, State, or regional entities. These proposed elevations are used to meet the floodplain management requirements of the NFIP and are also used to calculate the appropriate flood insurance premium rates for new buildings built after these elevations are made final, and for the contents in these buildings.

Comments on any aspect of the Flood Insurance Study and FIRM, other than the proposed BFEs, will be considered. A letter acknowledging receipt of any comments will not be sent.

National Environmental Policy Act. This proposed rule is categorically excluded from the requirements of 44 CFR part 10, Environmental Consideration. An environmental impact assessment has not been prepared.

Regulatory Flexibility Act. As flood elevation determinations are not within the scope of the Regulatory Flexibility Act, 5 U.S.C. 601–612, a regulatory flexibility analysis is not required.

Executive Order 12866, Regulatory Planning and Review. This proposed rule is not a significant regulatory action under the criteria of section 3(f) of Executive Order 12866, as amended.

Executive Order 13132, Federalism. This proposed rule involves no policies that have federalism implications under Executive Order 13132.

Executive Order 12988, Civil Justice Reform. This proposed rule meets the applicable standards of Executive Order 12988.

List of Subjects in 44 CFR Part 67

Administrative practice and procedure, Flood insurance, Reporting and recordkeeping requirements.

Accordingly, 44 CFR part 67 is proposed to be amended as follows:

PART 67—[AMENDED]

1. The authority citation for part 67 continues to read as follows:

Authority: 42 U.S.C. 4001 *et seq.*; Reorganization Plan No. 3 of 1978, 3 CFR, 1978 Comp., p. 329; E.O. 12127, 44 FR 19367, 3 CFR, 1979 Comp., p. 376.

§ 67.4 [Amended]

2. The tables published under the authority of § 67.4 are proposed to be amended as follows:

Flooding source(s)	Location of referenced elevation **	* Elevation in feet (NGVD) + Elevation in feet (NAVD) # Depth in feet above ground ∧ Elevation in meters (MSL)		Communities affected
		Effective	Modified	
Rock Island County, Illinois, and Incorporated Areas				
Mississippi River	From River Mile 449.4, approximately 0.65 miles upstream of the Mercer/Rock Island County Boundary and 1.7 miles downstream of the confluence with Copperas Creek.	+554	+555	Unincorporated Areas of Rock Island County, City of East Moline, City of Moline, City of Rock Island, Village of Andalusia, Village of Cordova, Village of Hampton, Village of Milan, Village of Port Byron, Village of Rapids City.
	To the Whitside/Rock Island County Boundary (River Mile 512.25), approximately 0.6 miles upstream of the confluence with Meredosia Ditch.	+587	+588	
Sylvan Slough	From the convergence with Mississippi River (River Mile 482.7), approximately 0.3 miles downstream of Lock and Dam No. 15.	+564	+565	City of Moline, City of Rock Island.
	To the divergence from the Mississippi River (RM 486.0), Cross Section I, approximately 0.17 miles upstream of Memorial (I–74) Bridge.	+570	+569	

* National Geodetic Vertical Datum.
+ North American Vertical Datum.
# Depth in feet above ground.
∧ Mean Sea Level, rounded to the nearest 0.1 meter.
** BFEs to be changed include the listed downstream and upstream BFEs, and include BFEs located on the stream reach between the referenced locations above. Please refer to the revised Flood Insurance Rate Map located at the community map repository (see below) for exact locations of all BFEs to be changed.

Send comments to William R. Blanton, Jr., Chief, Engineering Management Branch, Mitigation Directorate, Federal Emergency Management Agency, 500 C Street, SW., Washington, DC 20472.

ADDRESSES

City of East Moline
Maps are available for inspection at East Moline City Hall, 915 16th Avenue, East Moline, IL 61244.

City of Moline
Maps are available for inspection at Moline City Hall, 619 16th Street, Moline, IL 61265.

City of Rock Island
Maps are available for inspection at Rock Island City Hall, 1528 3rd Street, Rock Island, IL 61201.

Unincorporated Areas of Rock Island County
Maps are available for inspection at Rock Island County Courthouse, 1504 3rd Avenue, Rock Island, IL 61201.

Village of Andalusia
Maps are available for inspection at Andalusia Village Hall, 221 First Street, Andalusia, IL 61232.

Village of Cordova
Maps are available for inspection at 906 Main Avenue, P.O. Box 6, Cordova, IL 61242.

Village of Hampton
Maps are available for inspection at 520 1st Avenue, P.O. Box 77, Hampton, IL 61256.

Village of Milan
Maps are available for inspection at Milan Village Hall, 405 East First Street, Milan, IL 61264.

Village of Port Byron
Maps are available for inspection at 120 South Main Street, P.O. Box 438, Port Byron, IL 61275.

Village of Rapids City
Maps are available for inspection at 1204 4th Avenue, P.O. Box 134, Rapids City, IL 61278.

Bee County, Texas, and Incorporated Areas				
Salt Branch	Intersection of Unnamed Road and Salt Branch	+164	+163	Unincorporated Areas of Bee County.
	Approximately 249 Feet downstream of Emily Drive	+185	+184	

* National Geodetic Vertical Datum.
+ North American Vertical Datum.
# Depth in feet above ground.

Flooding source(s)	Location of referenced elevation **	* Elevation in feet (NGVD) + Elevation in feet (NAVD) # Depth in feet above ground ∧ Elevation in meters (MSL)		Communities affected
		Effective	Modified	

** BFEs to be changed include the listed downstream and upstream BFEs, and include BFEs located on the stream reach between the referenced locations above. Please refer to the revised Flood Insurance Rate Map located at the community map repository (see below) for exact locations of all BFEs to be changed.

Send comments to William R. Blanton, Jr., Chief, Engineering Management Branch, Mitigation Directorate, Federal Emergency Management Agency, 500 C Street, SW., Washington, DC 20472.

ADDRESSES

Unincorporated Areas of Bee County

Maps are available for inspection at Bee County Courthouse, 105 West Corpus Christi Street, Beeville, TX 78102.

Wilson County, Texas, and Incorporated Areas

Cibolo Creek	Approximately 2000 feet downstream from CR 345	None	+486	Unincorporated Areas of Wilson County.
	Approximately 995 feet from CR "A"	None	+496	
Lodi Branch	Approximately 373 Feet Upstream from 1st St	None	+393	Unincorporated Areas of Wilson County.
	Approximately 1290 Feet Down stream from State Highway 97W.	None	+407	
Picosa Creek	Approximately 6036 Feet downstream from State highway 97W.	None	+373	Unincorporated Areas of Wilson County.
	Approximately 6700 Feet Downstream from Pleasanton Road.	None	+378	
San Antonio River	Approximately 1327 Feet downstream from the confluence of Pajarito Creek.	None	+373	Unincorporated Areas of Wilson County.
	At the confluence of Tributary 320	None	+390	
Stream 2	At the Confluence of San Antonio River	None	+373	Unincorporated Areas of Wilson County.
	Approximately 1220 Feet Downstream from State Highway 97W.	None	+373	

* National Geodetic Vertical Datum.
+ North American Vertical Datum.
# Depth in feet above ground.

** BFEs to be changed include the listed downstream and upstream BFEs, and include BFEs located on the stream reach between the referenced locations above. Please refer to the revised Flood Insurance Rate Map located at the community map repository (see below) for exact locations of all BFEs to be changed.

Send comments to William R. Blanton, Jr., Chief, Engineering Management Branch, Mitigation Directorate, Federal Emergency Management Agency, 500 C Street, SW., Washington, DC 20472.

ADDRESSES

Unincorporated Areas of Wilson County

Maps are available for inspection at 1430 3rd street, Floresville, TX 78114.

Dodge County, Wisconsin, and Incorporated Areas

Beaver Dam Lake	Entire shoreline	+873	+874	City of Beaver Dam, City of Fox Lake, Unincorporated Areas of Dodge County.
Beaver Dam River	377 feet downstream of U.S. Highway 151	None	+841	City of Beaver Dam, Unincorporated Areas of Dodge County.
	Beaver Dam Lake Dam	+865	+866	
Fox Lake	Entire shoreline	+892	+896	City of Fox Lake, Unincorporated Areas of Dodge County.
Libby Creek	0.25 miles downstream of Shamrock Road	None	+864	Unincorporated Areas of Dodge County.
	.53 miles upstream of County Highway I	None	+884	
Old Mill Creek	0.51 miles downstream of County Highway P	None	+883	City of Fox Lake, Unincorporated Areas of Dodge County.
	878 feet upstream of State Highway 33	+892	+896	
Park Creek	0.25 miles downstream of Shaw Hill Road	None	+818	City of Beaver Dam, Unincorporated Areas of Dodge County.
	Just upstream of North Crystal Lake Road	None	+895	

Flooding source(s)	Location of referenced elevation **	* Elevation in feet (NGVD) + Elevation in feet (NAVD) # Depth in feet above ground ∧ Elevation in meters (MSL)		Communities affected
		Effective	Modified	
Pratt Creek	153 feet downstream of Sunset Road	None	+879	Unincorporated Areas of Dodge County.
	.93 miles upstream of Fairfield Road	None	+903	

* National Geodetic Vertical Datum.
+ North American Vertical Datum.
# Depth in feet above ground.
** BFEs to be changed include the listed downstream and upstream BFEs, and include BFEs located on the stream reach between the referenced locations above. Please refer to the revised Flood Insurance Rate Map located at the community map repository (see below) for exact locations of all BFEs to be changed.

Send comments to William R. Blanton, Jr., Chief, Engineering Management Branch, Mitigation Directorate, Federal Emergency Management Agency, 500 C Street, SW., Washington, DC 20472.

ADDRESSES

City of Beaver Dam
Maps are available for inspection at 205 South Lincoln Avenue, Beaver Dam, WI 53916.

City of Fox Lake
Maps are available for inspection at 248 East State Street, Fox Lake, WI 53933.

Unincorporated Areas of Dodge County
Maps are available for inspection at 127 East Oak Street, Juneau, WI 53039.

(Catalog of Federal Domestic Assistance No. 97.022, ''Flood Insurance.'')

Dated: March 16, 2009.

Michael K. Buckley,

Acting Assistant Administrator, Mitigation Directorate, Department of Homeland Security, Federal Emergency Management Agency.

[FR Doc. E9–6581 Filed 3–24–09; 8:45 am]

BILLING CODE 9110–12–P

DEPARTMENT OF HOMELAND SECURITY

Federal Emergency Management Agency

44 CFR Part 67

[Docket ID FEMA–2008–0020; Internal Agency Docket No. FEMA–B–1035]

Proposed Flood Elevation Determinations

AGENCY: Federal Emergency Management Agency, DHS.

ACTION: Proposed rule.

SUMMARY: Comments are requested on the proposed Base (1 percent annual-chance) Flood Elevations (BFEs) and proposed BFE modifications for the communities listed in the table below. The purpose of this notice is to seek general information and comment regarding the proposed regulatory flood elevations for the reach described by the downstream and upstream locations in the table below. The BFEs and modified BFEs are a part of the floodplain management measures that the community is required either to adopt or show evidence of having in effect in order to qualify or remain qualified for participation in the National Flood Insurance Program (NFIP). In addition, these elevations, once finalized, will be used by insurance agents, and others to calculate appropriate flood insurance premium rates for new buildings and the contents in those buildings.

DATES: Comments are to be submitted on or before June 23, 2009.

ADDRESSES: The corresponding preliminary Flood Insurance Rate Map (FIRM) for the proposed BFEs for each community are available for inspection at the community's map repository. The respective addresses are listed in the table below.

You may submit comments, identified by Docket No. FEMA–B–1035, to William R. Blanton, Jr., Chief, Engineering Management Branch, Mitigation Directorate, Federal Emergency Management Agency, 500 C Street SW., Washington, DC 20472, (202) 646–3151, or (e-mail) *bill.blanton@dhs.gov*.

FOR FURTHER INFORMATION CONTACT: William R. Blanton, Jr., Chief, Engineering Management Branch, Mitigation Directorate, Federal Emergency Management Agency, 500 C Street SW., Washington, DC 20472, (202) 646–3151 or (e-mail) *bill.blanton@dhs.gov*.

SUPPLEMENTARY INFORMATION: The Federal Emergency Management Agency (FEMA) proposes to make determinations of BFEs and modified BFEs for each community listed below, in accordance with section 110 of the Flood Disaster Protection Act of 1973, 42 U.S.C. 4104, and 44 CFR 67.4(a).

These proposed BFEs and modified BFEs, together with the floodplain management criteria required by 44 CFR 60.3, are the minimum that are required. They should not be construed to mean that the community must change any existing ordinances that are more stringent in their floodplain management requirements. The community may at any time enact stricter requirements of its own, or pursuant to policies established by other Federal, State, or regional entities. These proposed elevations are used to meet the floodplain management requirements of the NFIP and are also used to calculate the appropriate flood insurance premium rates for new buildings built after these elevations are made final, and for the contents in these buildings.

Comments on any aspect of the Flood Insurance Study and FIRM, other than the proposed BFEs, will be considered. A letter acknowledging receipt of any comments will not be sent.

National Environmental Policy Act. This proposed rule is categorically

excluded from the requirements of 44 CFR part 10, Environmental Consideration. An environmental impact assessment has not been prepared.

Regulatory Flexibility Act. As flood elevation determinations are not within the scope of the Regulatory Flexibility Act, 5 U.S.C. 601–612, a regulatory flexibility analysis is not required.

Executive Order 12866, Regulatory Planning and Review. This proposed rule is not a significant regulatory action under the criteria of section 3(f) of Executive Order 12866, as amended.

Executive Order 13132, Federalism. This proposed rule involves no policies that have federalism implications under Executive Order 13132.

Executive Order 12988, Civil Justice Reform. This proposed rule meets the applicable standards of Executive Order 12988.

List of Subjects in 44 CFR Part 67

Administrative practice and procedure, Flood insurance, Reporting and recordkeeping requirements.

Accordingly, 44 CFR part 67 is proposed to be amended as follows:

PART 67—[AMENDED]

1. The authority citation for part 67 continues to read as follows:

Authority: 42 U.S.C. 4001 *et seq.*; Reorganization Plan No. 3 of 1978, 3 CFR, 1978 Comp., p. 329; E.O. 12127, 44 FR 19367, 3 CFR, 1979 Comp., p. 376.

§ 67.4 [Amended]

2. The tables published under the authority of § 67.4 are proposed to be amended as follows:

State	City/town/county	Source of flooding	Location **	* Elevation in feet (NGVD) + Elevation in feet (NAVD) # Depth in feet above ground	
				Existing	Modified
Village of McDonald, Ohio					
Ohio	Village of McDonald	Mahoning River	Approximately 8,500 feet upstream of I–80.	None	+855
			Approximately 17,600 feet upstream of I–80.	None	+858

* National Geodetic Vertical Datum.
\+ North American Vertical Datum.
\# Depth in feet above ground.

** BFEs to be changed include the listed downstream and upstream BFEs, and include BFEs located on the stream reach between the referenced locations above. Please refer to the revised Flood Insurance Rate Map located at the community map repository (see below) for exact locations of all BFEs to be changed.

Send comments to William R. Blanton, Jr., Chief, Engineering Management Branch, Mitigation Directorate, Federal Emergency Management Agency, 500 C Street, SW., Washington, DC 20472.

ADDRESSES

Village of McDonald
Maps are available for inspection at 451 Ohio Avenue, McDonald, OH 44437.

Flooding source(s)	Location of referenced elevation **	* Elevation in feet (NGVD) + Elevation in feet (NAVD) # Depth in feet above ground		Communities affected
		Effective	Modified	
Sebastian County, Arkansas, and Incorporated Areas				
Little Vache Grasse Creek	At the Confluence of Unnamed Stream	None	+402	City of Barling.
	Approximately 4,060 feet upstream From Rye Hill Road	None	+479	
Little Vache Grasse Creek Tributary 9.	At the Confluence of Little Vache Grasse Creek	None	+434	City of Barling.
	Approximately 3,580 feet upstream from Unnamed Road	None	+478	
Unnamed Stream	At the Confluence of Little Vache Grasse Creek	None	+445	City of Barling.
	Approximately 1,260 feet upstream from Confluence of Little Vache Grasse Creek.	None	+448	

* National Geodetic Vertical Datum.
\+ North American Vertical Datum.
\# Depth in feet above ground.

** BFEs to be changed include the listed downstream and upstream BFEs, and include BFEs located on the stream reach between the referenced locations above. Please refer to the revised Flood Insurance Rate Map located at the community map repository (see below) for exact locations of all BFEs to be changed.

Send comments to William R. Blanton, Jr., Chief, Engineering Management Branch, Mitigation Directorate, Federal Emergency Management Agency, 500 C Street, SW., Washington, DC 20472.

ADDRESSES

City of Barling

Flooding source(s)	Location of referenced elevation **	* Elevation in feet (NGVD) + Elevation in feet (NAVD) # Depth in feet above ground		Communities affected
		Effective	Modified	
Maps are available for inspection at 304 Church Street, Barling, AR 72923.				
Yolo County, California, and Incorporated Areas				
Ponding Area	Area northwest of intersection of Interstate 505/County Road 90 and Russell Boulevard/Grant Avenue.	None	#2	Unincorporated Areas of Yolo County.
	Area north of Moody Slough Road, west of County Road 89, and east of County Road 88.	None	#2	
	Area north of an unnamed road, west of County Road 89, and east of County Road 88.	None	#2	
Zone AE Area	Area north of King Road, south of Mills Road, and east of County Road 104.	None	+23	Unincorporated Areas of Yolo County.

* National Geodetic Vertical Datum.
+ North American Vertical Datum.
# Depth in feet above ground.
** BFEs to be changed include the listed downstream and upstream BFEs, and include BFEs located on the stream reach between the referenced locations above. Please refer to the revised Flood Insurance Rate Map located at the community map repository (see below) for exact locations of all BFEs to be changed.

Send comments to William R. Blanton, Jr., Chief, Engineering Management Branch, Mitigation Directorate, Federal Emergency Management Agency, 500 C Street, SW., Washington, DC 20472.

ADDRESSES

Unincorporated Areas of Yolo County

Maps are available for inspection at Yolo County Planning and Public Works Department, 292 West Beamer Street, Woodland, CA.

Linn County, Iowa, and Incorporated Areas				
Big Creek	South Ely Street	None	+713	City of Bertram.
	Big Creek Road	None	+719	
Cedar Lake	Entire Shoreline of Cedar Lake	None	+727	City of Cedar Rapids.
Cedar River	1300 feet downstream of the confluence with Indian Creek.	+712	+711	City of Cedar Rapids.
	Just downstream of Edgewood Road	+731	+730	
McClouds Run	1373 feet downstream of Shaver Road Northwest	None	+728	City of Cedar Rapids.
	1056 feet upstream of Shaver Road Northeast	None	+728	

* National Geodetic Vertical Datum.
+ North American Vertical Datum.
# Depth in feet above ground.
** BFEs to be changed include the listed downstream and upstream BFEs, and include BFEs located on the stream reach between the referenced locations above. Please refer to the revised Flood Insurance Rate Map located at the community map repository (see below) for exact locations of all BFEs to be changed.

Send comments to William R. Blanton, Jr., Chief, Engineering Management Branch, Mitigation Directorate, Federal Emergency Management Agency, 500 C Street, SW., Washington, DC 20472.

ADDRESSES

City of Bertram

Maps are available for inspection at 930 First Street Southwest, Cedar Rapids, IA 52404.

City of Cedar Rapids

Maps are available for inspection at 1201 Sixth Street Southwest, Cedar Rapids, IA 52404.

Mercer County, Illinois, and Incorporated Areas				
Mississippi River	From 431 miles above confluence with the Ohio River (approx. 0.1 Miles downstream of 50th Street extended).	+547	+546	City of New Boston, Unincorporated Areas of Mercer County.
	To 437 miles above confluence with the Ohio River (approx. 0.2 Miles downstream of Lock & Dam Road extended).	+551	+550	

* National Geodetic Vertical Datum.
+ North American Vertical Datum.
# Depth in feet above ground.
** BFEs to be changed include the listed downstream and upstream BFEs, and include BFEs located on the stream reach between the referenced locations above. Please refer to the revised Flood Insurance Rate Map located at the community map repository (see below) for exact locations of all BFEs to be changed.

Flooding source(s)	Location of referenced elevation **	* Elevation in feet (NGVD) + Elevation in feet (NAVD) # Depth in feet above ground		Communities affected
		Effective	Modified	

Send comments to William R. Blanton, Jr., Chief, Engineering Management Branch, Mitigation Directorate, Federal Emergency Management Agency, 500 C Street, SW., Washington, DC 20472.

ADDRESSES

City of New Boston

Maps are available for inspection at New Boston City Hall, 405 Main Street, New Boston, IL 61272.

Unincorporated Areas of Mercer County

Maps are available for inspection at Mercer County Courthouse, 100 SE 3rd Street, Aledo, IL 61231.

Acadia Parish, Louisiana, and Incorporated Areas

Flooding Effects of Mermentau River.	Approximately 4126 feet upstream of the confluence of the Mermentau River and Bayou Queue de Tortue. Base Flood Elevations extend from the river edge east into the surrounding area.	None	+11	Unincorporated Areas of Acadia Parish, Village of Mermentau.
	Approximately 9450 feet upstream of the intersection of the Mermentau River and South Railroad Avenue.	None	+15	

* National Geodetic Vertical Datum.

+ North American Vertical Datum.

Depth in feet above ground.

** BFEs to be changed include the listed downstream and upstream BFEs, and include BFEs located on the stream reach between the referenced locations above. Please refer to the revised Flood Insurance Rate Map located at the community map repository (see below) for exact locations of all BFEs to be changed.

Send comments to William R. Blanton, Jr., Chief, Engineering Management Branch, Mitigation Directorate, Federal Emergency Management Agency, 500 C Street, SW., Washington, DC 20472.

ADDRESSES

Unincorporated Areas of Acadia Parish

Maps are available for inspection at 568 NE Court Circle, Crowley, LA 70526.

Village of Mermentau

Maps are available for inspection at 104 7th Street, Mermentau, LA 70556.

West Baton Rouge Parish, Louisiana, and Incorporated Areas

Bayou Poydras	Approximately 160 feet downstream of State Route 413	None	+11	Unincorporated Areas of West Baton Rouge Parish
	Approximately 100 feet upstream of Section Road	None	+22	
Chamberlin Canal	Intersection of Chamberlin Canal and Airline Highway	None	+19	Unincorporated Areas of West Baton Rouge Parish.
	Approximately 4361 feet downstream of Section Road	None	+21	
Cline Lateral	Approximately 1819 feet downstream of Section Road	None	+18	Unincorporated Areas of West Baton Rouge Parish.
	Approximately 60 feet upstream of Tonawanda Street	None	+23	
Grand Bayou	Intersection of Airline Highway and Grand Bayou.	None	+19	Unincorporated Areas of West Baton Rouge Parish.
	Approximately 157 feet upstream of Treuil Road	None	+20	
Kean Lateral	Approximately 1760 feet upstream of the intersection of Kean Lateral and Airline Highway.	None	+19	Unincorporated Areas of West Baton Rouge Parish.
	Approximately 170 feet upstream of the intersection of Section Road and Kean Lateral.	None	+20	
Little Stumpy Bayou	Intersection of Airline Highway and Little Stumpy Bayou	None	+16	Unincorporated Areas of West Baton Rouge Parish.
	Approximately 4387 feet upstream of the intersection of Airline Highway and Little Stumpy Bayou.	None	+17	
Stumpy Bayou	Intersection of Stumpy Bayou and Airline Highway	None	+16	Unincorporated Areas of West Baton Rouge Parish.
	Approximately 2965 feet upstream of the intersection of Elm Grove Road and Stumpy Bayou.	None	+20	
Tiger Bayou	Approximately 3663 feet upstream of intersection of Airline Highway and Tiger Bayou.	None	+17	Unincorporated Areas of West Baton Rouge Parish.

Flooding source(s)	Location of referenced elevation **	* Elevation in feet (NGVD) + Elevation in feet (NAVD) # Depth in feet above ground		Communities affected
		Effective	Modified	
	Approximately 205 feet upstream of Section Road and Tiger Bayou.	None	+21	

* National Geodetic Vertical Datum.
+ North American Vertical Datum.
# Depth in feet above ground.

** BFEs to be changed include the listed downstream and upstream BFEs, and include BFEs located on the stream reach between the referenced locations above. Please refer to the revised Flood Insurance Rate Map located at the community map repository (see below) for exact locations of all BFEs to be changed.

Send comments to William R. Blanton, Jr., Chief, Engineering Management Branch, Mitigation Directorate, Federal Emergency Management Agency, 500 C Street, SW., Washington, DC 20472.

ADDRESSES

Unincorporated Areas of West Baton Rouge Parish

Maps are available for inspection at 880 North Alexander Ave., Port Allen, LA 70767.

Ramsey County, Minnesota, and Incorporated Areas

Bald Eagle Lake	Entire Shoreline in Ramsey County	None	+913	Township of White Bear.
Casey Lake	Entire Shoreline	None	+928	City of Maplewood.
Gervais Lake	Entire Shoreline	None	+863	City of Maplewood.
Josephine Lake	Entire Shoreline	None	+886	City of Roseville.
Lake Owasso	Entire Shoreline	None	+889	City of Roseville.
Little Lake Johanna	Entire Shoreline	None	+879	City of Roseville.
Otter Lake	Entire Shoreline in Ramsey County	None	+913	Township of White Bear.
Silver Lake	Entire Shoreline	None	+991	City of Maplewood, City of North St. Paul.
Twin Lake	Entire Shoreline	None	+872	City of Little Canada, City of Vadnais Heights.

* National Geodetic Vertical Datum.
+ North American Vertical Datum.
# Depth in feet above ground.

** BFEs to be changed include the listed downstream and upstream BFEs, and include BFEs located on the stream reach between the referenced locations above. Please refer to the revised Flood Insurance Rate Map located at the community map repository (see below) for exact locations of all BFEs to be changed.

Send comments to William R. Blanton, Jr., Chief, Engineering Management Branch, Mitigation Directorate, Federal Emergency Management Agency, 500 C Street, SW., Washington, DC 20472.

ADDRESSES

City of Little Canada

Maps are available for inspection at Little Canada City Center, 515 Little Canada Road East, Little Canada, MN 55117–1600.

City of Maplewood

Maps are available for inspection at City Hall, 1830 County Road B East, Maplewood, MN 55109.

City of North St. Paul

Maps are available for inspection at City Hall, 2400 Margaret Street, North St. Paul, MN 55109.

City of Roseville

Maps are available for inspection at City Hall, 2660 Civic Center Drive, Roseville, MN 55113.

City of Vadnais Heights

Maps are available for inspection at City Hall, 800 East County Road East, Vadnais Heights, MN 55127.

Township of White Bear

Maps are available for inspection at Township Administration Building, 1281 Hammond Road, White Bear Township, MN 55110.

Pike County, Missouri, and Incorporated Areas

Mississippi River	Convergence of Thomas Chute	None	+450	Unincorporated Areas of Pike County, City of Clarksville, City of Louisiana, Village of Annada.
	Convergence of Gilbert Chute	None	+469	
Noix Creek	0.67 Miles Upstream from Highway 79	None	+465	Unincorporated Areas of Pike County.
	Confluence of Bishop Branch	None	+477	

* National Geodetic Vertical Datum.
+ North American Vertical Datum.
# Depth in feet above ground.

Flooding source(s)	Location of referenced elevation **	* Elevation in feet (NGVD) + Elevation in feet (NAVD) # Depth in feet above ground		Communities affected
		Effective	Modified	

** BFEs to be changed include the listed downstream and upstream BFEs, and include BFEs located on the stream reach between the referenced locations above. Please refer to the revised Flood Insurance Rate Map located at the community map repository (see below) for exact locations of all BFEs to be changed.

Send comments to William R. Blanton, Jr., Chief, Engineering Management Branch, Mitigation Directorate, Federal Emergency Management Agency, 500 C Street, SW., Washington, DC 20472.

ADDRESSES

City of Clarksville
Maps are available for inspection at 111 Howard Street, Clarksville, MO 63336.

City of Louisiana
Maps are available for inspection at 202 South Third Street, Louisiana, MO 63353.

Unincorporated Areas of Pike County
Maps are available for inspection at 115 West Main Street, Bowling Green, MO 63334.

Village of Annada
Maps are available for inspection at 232 Arlington Avenue, Annada, MO 63330.

(Catalog of Federal Domestic Assistance No. 97.022, ''Flood Insurance.'')

Dated: March 16, 2009.

Michael K. Buckley,

Acting Assistant Administrator, Mitigation Directorate, Department of Homeland Security, Federal Emergency Management Agency.

[FR Doc. E9–6580 Filed 3–24–09; 8:45 am]

BILLING CODE 9110–12–P

DEPARTMENT OF HOMELAND SECURITY

Federal Emergency Management Agency

44 CFR Part 67

[Docket ID FEMA–2008–0020; Internal Agency Docket No. FEMA–B–1038]

Proposed Flood Elevation Determinations

AGENCY: Federal Emergency Management Agency, DHS.

ACTION: Proposed rule.

SUMMARY: Comments are requested on the proposed Base (1 percent annual-chance) Flood Elevations (BFEs) and proposed BFE modifications for the communities listed in the table below. The purpose of this notice is to seek general information and comment regarding the proposed regulatory flood elevations for the reach described by the downstream and upstream locations in the table below. The BFEs and modified BFEs are a part of the floodplain management measures that the community is required either to adopt or show evidence of having in effect in order to qualify or remain qualified for participation in the National Flood Insurance Program (NFIP). In addition, these elevations, once finalized, will be used by insurance agents, and others to calculate appropriate flood insurance premium rates for new buildings and the contents in those buildings.

DATES: Comments are to be submitted on or before June 23, 2009.

ADDRESSES: The corresponding preliminary Flood Insurance Rate Map (FIRM) for the proposed BFEs for each community are available for inspection at the community's map repository. The respective addresses are listed in the table below.

You may submit comments, identified by Docket No. FEMA–B–1038, to William R. Blanton, Jr., Chief, Engineering Management Branch, Mitigation Directorate, Federal Emergency Management Agency, 500 C Street, SW., Washington, DC 20472, (202) 646–3151, or (e-mail) *bill.blanton@dhs.gov*.

FOR FURTHER INFORMATION CONTACT: William R. Blanton, Jr., Chief, Engineering Management Branch, Mitigation Directorate, Federal Emergency Management Agency, 500 C Street, SW., Washington, DC 20472, (202) 646–3151 or (e-mail) *bill.blanton@dhs.gov*.

SUPPLEMENTARY INFORMATION: The Federal Emergency Management Agency (FEMA) proposes to make determinations of BFEs and modified BFEs for each community listed below, in accordance with section 110 of the Flood Disaster Protection Act of 1973, 42 U.S.C. 4104, and 44 CFR 67.4(a).

These proposed BFEs and modified BFEs, together with the floodplain management criteria required by 44 CFR 60.3, are the minimum that are required. They should not be construed to mean that the community must change any existing ordinances that are more stringent in their floodplain management requirements. The community may at any time enact stricter requirements of its own, or pursuant to policies established by other Federal, State, or regional entities. These proposed elevations are used to meet the floodplain management requirements of the NFIP and are also used to calculate the appropriate flood insurance premium rates for new buildings built after these elevations are made final, and for the contents in these buildings.

Comments on any aspect of the Flood Insurance Study and FIRM, other than the proposed BFEs, will be considered. A letter acknowledging receipt of any comments will not be sent.

National Environmental Policy Act. This proposed rule is categorically excluded from the requirements of 44 CFR part 10, Environmental Consideration. An environmental impact assessment has not been prepared.

Regulatory Flexibility Act. As flood elevation determinations are not within the scope of the Regulatory Flexibility Act, 5 U.S.C. 601–612, a regulatory flexibility analysis is not required.

Executive Order 12866, Regulatory Planning and Review. This proposed rule is not a significant regulatory action under the criteria of section 3(f) of Executive Order 12866, as amended.

Executive Order 13132, Federalism. This proposed rule involves no policies that have federalism implications under Executive Order 13132.

Executive Order 12988, Civil Justice Reform. This proposed rule meets the applicable standards of Executive Order 12988.

List of Subjects in 44 CFR Part 67

Administrative practice and procedure, Flood insurance, Reporting and recordkeeping requirements.

Accordingly, 44 CFR part 67 is proposed to be amended as follows:

PART 67—[AMENDED]

1. The authority citation for part 67 continues to read as follows:

Authority: 42 U.S.C. 4001 *et seq.*; Reorganization Plan No. 3 of 1978, 3 CFR, 1978 Comp., p. 329; E.O. 12127, 44 FR 19367, 3 CFR, 1979 Comp., p. 376.

§ 67.4 [Amended]

2. The tables published under the authority of § 67.4 are proposed to be amended as follows:

State	City/town/county	Source of flooding	Location**	* Elevation in feet (NGVD) + Elevation in feet (NAVD) # Depth in feet above ground ∧ Elevation in meters (MSL)	
				Existing	Modified
Prairie Island Indian Community, Minnesota					
Minnesota	Prairie Island Indian Community.	Mississippi River	Located at the Goodhue/Wabasha County Line.	+682	+681
			Located at the Goodhue/Dakota County Line.	+690	+688

* National Geodetic Vertical Datum.
\+ North American Vertical Datum.
\# Depth in feet above ground.
∧ Mean Sea Level, rounded to the nearest 0.1 meter.
** BFEs to be changed include the listed downstream and upstream BFEs, and include BFEs located on the stream reach between the referenced locations above. Please refer to the revised Flood Insurance Rate Map located at the community map repository (see below) for exact locations of all BFEs to be changed.

Send comments to William R. Blanton, Jr., Chief, Engineering Management Branch, Mitigation Directorate, Federal Emergency Management Agency, 500 C Street, SW., Washington, DC 20472.

ADDRESSES

Prairie Island Indian Community
Maps are available for inspection at the Administration Building, 5636 Sturgeon Lake Road, Welch, MN 55089.

Flooding source(s)	Location of referenced elevation**	* Elevation in feet (NGVD) + Elevation in feet (NAVD) # Depth in feet above ground ∧ Elevation in meters (MSL)		Communities affected
		Effective	Modified	
New Haven County, Connecticut, and Incorporated Areas				
Coguinchaug River	At county boundary	None	+199	Town of Guilford.
	Approximately 25 feet upstream of county boundary	None	+199	
Farm River	At a point located approximately 700 feet downstream of West Main Street (U.S. Route 1).	+11	+10	Town of Branford, Town of East Haven.
	At Mouth of Farm River	+14	+15	
Hoadley Creek	Approximately 700 feet upstream of State Route 146	None	+10	Town of Branford.
	Approximately 800 feet upstream of State Route 146	None	+10	
Housatonic River	Approximately 1.7 miles upstream of Merritt Parkway	+15	+14	City of Milford.
	Approximately 2.2 miles upstream of Merritt Parkway	+16	+14	
Mad River (Lower Reach)	Approximately 73 feet upstream of Sharon Road	None	+461	City of Waterbury.
	Approximately 800 feet upstream of Sharon Road	None	+461	
Muddy River Tributary C	Approximately 528 feet downstream of State Route 22.	None	+80	Town of North Haven.
	Approximately 328 feet downstream of State Route 22.	None	+81	
Naugatuck River	Approximately 0.65 mile downstream of Kinneytown Dam.	+44	+40	Town of Seymour.
	Approximately 0.53 mile downstream of Kinneytown Dam.	+44	+43	
Neck River	Just upstream of Goulds Pond Dam	None	+76	Town of Guilford.
	Approximately 0.8 mile upstream of Blinn Shed Road	None	+143	
Quinnipiac River	At confluence of Wharton Brook	+20	+21	Town of North Haven.

Flooding source(s)	Location of referenced elevation**	* Elevation in feet (NGVD) + Elevation in feet (NAVD) # Depth in feet above ground ∧ Elevation in meters (MSL)		Communities affected
		Effective	Modified	
	Just downstream of Toelles Road	+22	+23	
Wharton Brook	At confluence with Quinnipiac River	+20	+21	Town of North Haven.
	Approximately 500 feet upstream of the confluence with Quinnipiac River.	+20	+21	
Willow Brook	Approximately 400 feet upstream of the confluence with Mill River.	+113	+114	Town of Hamden.
	At Mount Sanford Road	None	+125	

* National Geodetic Vertical Datum.
+ North American Vertical Datum.
# Depth in feet above ground.
∧ Mean Sea Level, rounded to the nearest 0.1 meter.
** BFEs to be changed include the listed downstream and upstream BFEs, and include BFEs located on the stream reach between the referenced locations above. Please refer to the revised Flood Insurance Rate Map located at the community map repository (see below) for exact locations of all BFEs to be changed.

Send comments to William R. Blanton, Jr., Chief, Engineering Management Branch, Mitigation Directorate, Federal Emergency Management Agency, 500 C Street, SW., Washington, DC 20472.

ADDRESSES

City of Milford
Maps are available for inspection at City of Milford Planning and Zoning Office, 70 West River Street, Milford, CT.

City of Waterbury
Maps are available for inspection at City of Waterbury Public Works Department, 26 Kendrick Avenue, 2nd Floor, Waterbury, CT.

Town of Branford
Maps are available for inspection at Branford Town Hall, 1019 Main Street, Branford, CT.

Town of East Haven
Maps are available for inspection at Town of East Haven Engineering Office, 461 North High Street, East Haven, CT.

Town of Guilford
Maps are available for inspection at Guilford Town Hall South, 50 Boston Street, Guilford, CT.

Town of Hamden
Maps are available for inspection at Town of Hamden Planning and Zoning Department, 2750 Dixwell Avenue, Hamden, CT.

Town of North Haven
Maps are available for inspection at North Haven Town Hall Annex, 18 Church Street, North Haven, CT.

Town of Seymour
Maps are available for inspection at Seymour Town Hall, 1 First Street, Seymour, CT.

Flooding source(s)	Location of referenced elevation**	* Elevation in feet (NGVD) + Elevation in feet (NAVD) # Depth in feet above ground ∧ Elevation in meters (MSL)		Communities affected
		Effective	Modified	
Monroe County, Kentucky, and Incorporated Areas				
Cumberland River	Approximately 5200 feet downstream confluence with McFarland Creek.	None	+518	Unincorporated Areas of Monroe County.
	At confluence with Glasscock Creek	None	+536	

* National Geodetic Vertical Datum.
+ North American Vertical Datum.
# Depth in feet above ground.
∧ Mean Sea Level, rounded to the nearest 0.1 meter.
** BFEs to be changed include the listed downstream and upstream BFEs, and include BFEs located on the stream reach between the referenced locations above. Please refer to the revised Flood Insurance Rate Map located at the community map repository (see below) for exact locations of all BFEs to be changed.

Send comments to William R. Blanton, Jr., Chief, Engineering Management Branch, Mitigation Directorate, Federal Emergency Management Agency, 500 C Street, SW., Washington, DC 20472.

Flooding source(s)	Location of referenced elevation**	* Elevation in feet (NGVD) + Elevation in feet (NAVD) # Depth in feet above ground ∧ Elevation in meters (MSL)		Communities affected
		Effective	Modified	
ADDRESSES **Unincorporated Areas of Monroe County** Maps are available for inspection at 200 North Main Street, Tompkinsville, KY 42167.				
Evangeline Parish, Louisiana, and Incorporated Areas				
Bayou Barwick Tributary	At the intersection of Bayou Barwick Tributary and Stagg Road.	None	+44	Unincorporated Areas of Evangeline Parish.
	At the intersection of Bayou Barwick Tributary and Highway 190.	None	+44	
Bayou Joe Marcel Tributary #1.	At the intersection of Bayou Joe Marcel Tributary #1 and Alton Locks Street.	None	+67	Town of Ville Platte.
	At the intersection of Bayou Joe Marcel Tributary #1 and Te Mamou Road.	None	+67	
Bayou Joe Marcel Tributary #2.	Approximately 522 feet upstream of the intersection of Bayou Joe Marcel Tributary #2 and Main Street. Base Flood Elevations extend to Bayou Joe Marcel Tributary #3.	+72	+73	Town of Ville Platte.
	At the intersection of Bayou Joe Marcel Tributary #2 and Ortego Street. Base Flood Elevations extend to Bayou Joe Marcel Tributary #3.	None	+74	
Bayou Joe Marcel Tributary #3.	Approximately 1054 feet downstream of the intersection of Bayou Joe Marcel Tributary #3 and Reed Street. Base Flood Elevations extend to Bayou Joe Marcel Tributary #2.	None	+72	Town of Ville Platte.
	Approximately 197 feet downstream of the intersection of Bayou Joe Marcel Tributary #3 and Reed Street. Base Flood Elevations extend to Bayou Joe Marcel Tributary #2.	+72	+74	

* National Geodetic Vertical Datum.
+ North American Vertical Datum.
# Depth in feet above ground.
∧ Mean Sea Level, rounded to the nearest 0.1 meter.

** BFEs to be changed include the listed downstream and upstream BFEs, and include BFEs located on the stream reach between the referenced locations above. Please refer to the revised Flood Insurance Rate Map located at the community map repository (see below) for exact locations of all BFEs to be changed.

Send comments to William R. Blanton, Jr., Chief, Engineering Management Branch, Mitigation Directorate, Federal Emergency Management Agency, 500 C Street, SW., Washington, DC 20472.

ADDRESSES

Town of Ville Platte

Maps are available for inspection at P.O. Box 390, Ville Platte, LA 70586.

Unincorporated Areas of Evangeline Parish

Maps are available for inspection at 200 Court Street, Ste 207, Ville Platte, LA 70586.

Marion County, Missouri, and Incorporated Areas				
Bear Creek	3,930 Feet Downstream of County Road 418	None	+562	Unincorporated Areas of Marion County.
	U.S. Highway 36	None	+583	
Minnow Branch	Munger Lane	+587	+589	City of Hannibal, Unincorporated Areas of Marion County.
	Veterans Road	None	+685	
Mississippi River	2.175 Miles Downstream of the Confluence of Bear Creek.	+477	+476	Unincorporated Areas of Marion County, City of Hannibal.
	Confluence of Bear Creek	+475	+477	
	U.S. Highway 24	+488	+487	
St. Clair Creek	2,150 Feet Downstream of Veterans Road	+567	+568	Unincorporated Areas of Marion County, City of Hannibal.
	400 Feet Upstream of Highway MM	None	+652	

* National Geodetic Vertical Datum.

Flooding source(s)	Location of referenced elevation**	* Elevation in feet (NGVD) + Elevation in feet (NAVD) # Depth in feet above ground ∧ Elevation in meters (MSL)		Communities affected
		Effective	Modified	

+ North American Vertical Datum.
# Depth in feet above ground.
∧ Mean Sea Level, rounded to the nearest 0.1 meter.

** BFEs to be changed include the listed downstream and upstream BFEs, and include BFEs located on the stream reach between the referenced locations above. Please refer to the revised Flood Insurance Rate Map located at the community map repository (see below) for exact locations of all BFEs to be changed.

Send comments to William R. Blanton, Jr., Chief, Engineering Management Branch, Mitigation Directorate, Federal Emergency Management Agency, 500 C Street, SW., Washington, DC 20472.

ADDRESSES

City of Hannibal

Maps are available for inspection at 320 Broadway, Hannibal, MO 63401

Unincorporated Areas of Marion County

Maps are available for inspection at 100 South Main Street, Palmyra, MO 63461.

Saunders County, Nebraska, and Incorporated Areas

Cottonwood Creek	2,000 feet upstream of County Road Q	+1315	+1313	Unincorporated Areas of Saunders County, Village of Prague.
	Just upstream of Railroad Avenue	+1333	+1332	
	Just upstream of State Highway 79	+1344	+1335	
Platte River (with levee)	Just upstream of U.S. Highway 6	+1066	+1064	Unincorporated Areas of Saunders County, Village of Leshara, Village of Morse Bluff.
	Just upstream of State Highway 64	+1157	+1159	
	At State Highway 79	+1273	+1277	
Platte River (without levee)	Just upstream of U.S. Highway 6	+1066	+1064	Unincorporated Areas of Saunders County, Village of Leshara, Village of Morse Bluff.
	Just upstream of State Highway 64	+1157	+1154	
	At State Highway 79	+1273	+1277	

* National Geodetic Vertical Datum.
+ North American Vertical Datum.
# Depth in feet above ground.
∧ Mean Sea Level, rounded to the nearest 0.1 meter.

** BFEs to be changed include the listed downstream and upstream BFEs, and include BFEs located on the stream reach between the referenced locations above. Please refer to the revised Flood Insurance Rate Map located at the community map repository (see below) for exact locations of all BFEs to be changed.

Send comments to William R. Blanton, Jr., Chief, Engineering Management Branch, Mitigation Directorate, Federal Emergency Management Agency, 500 C Street, SW., Washington, DC 20472.

ADDRESSES

Unincorporated Areas of Saunders County

Maps are available for inspection at Courthouse, 433 North Chestnut, Wahoo, NE 68066.

Village of Leshara

Maps are available for inspection at Village Hall, 210 Summit Street, Leshara, NE 68064.

Village of Morse Bluff

Maps are available for inspection at Village Hall, 440 2nd Street, Morse Bluff, NE 68648.

Village of Prague

Maps are available for inspection at Village Hall, 401 West Center Avenue, Prague, NE 68050.

(Catalog of Federal Domestic Assistance No. 97.022, ''Flood Insurance.'')

Dated: February 11, 2009.

Michael K. Buckley,

Acting Assistant Administrator, Mitigation Directorate, Department of Homeland Security, Federal Emergency Management Agency.

[FR Doc. E9–6694 Filed 3–24–09; 8:45 am]

BILLING CODE 9110–12–P

DEPARTMENT OF HOMELAND SECURITY

Federal Emergency Management Agency

44 CFR Part 67

[Docket ID FEMA–2008–0020; Internal Agency Docket No. FEMA–B–1037]

Proposed Flood Elevation Determinations

AGENCY: Federal Emergency Management Agency, DHS.

ACTION: Proposed rule.

SUMMARY: Comments are requested on the proposed Base (1 percent annual-chance) Flood Elevations (BFEs) and proposed BFE modifications for the communities listed in the table below. The purpose of this notice is to seek general information and comment regarding the proposed regulatory flood elevations for the reach described by the downstream and upstream locations in the table below. The BFEs and modified BFEs are a part of the floodplain management measures that the community is required either to adopt or show evidence of having in effect in order to qualify or remain qualified for participation in the National Flood Insurance Program (NFIP). In addition, these elevations, once finalized, will be used by insurance agents, and others to calculate appropriate flood insurance premium rates for new buildings and the contents in those buildings.

DATES: Comments are to be submitted on or before June 23, 2009.

ADDRESSES: The corresponding preliminary Flood Insurance Rate Map (FIRM) for the proposed BFEs for each community are available for inspection at the community's map repository. The respective addresses are listed in the table below.

You may submit comments, identified by Docket No. FEMA–B–1037, to William R. Blanton, Jr., Chief, Engineering Management Branch, Mitigation Directorate, Federal Emergency Management Agency, 500 C Street, SW., Washington, DC 20472, (202) 646–3151, or (e-mail) *bill.blanton@dhs.gov*.

FOR FURTHER INFORMATION CONTACT: William R. Blanton, Jr., Chief, Engineering Management Branch, Mitigation Directorate, Federal Emergency Management Agency, 500 C Street SW., Washington, DC 20472, (202) 646–3151 or (e-mail) *bill.blanton@dhs.gov*.

SUPPLEMENTARY INFORMATION: The Federal Emergency Management Agency (FEMA) proposes to make determinations of BFEs and modified BFEs for each community listed below, in accordance with section 110 of the Flood Disaster Protection Act of 1973, 42 U.S.C. 4104, and 44 CFR 67.4(a).

These proposed BFEs and modified BFEs, together with the floodplain management criteria required by 44 CFR 60.3, are the minimum that are required. They should not be construed to mean that the community must change any existing ordinances that are more stringent in their floodplain management requirements. The community may at any time enact stricter requirements of its own, or pursuant to policies established by other Federal, State, or regional entities. These proposed elevations are used to meet the floodplain management requirements of the NFIP and are also used to calculate the appropriate flood insurance premium rates for new buildings built after these elevations are made final, and for the contents in these buildings.

Comments on any aspect of the Flood Insurance Study and FIRM, other than the proposed BFEs, will be considered. A letter acknowledging receipt of any comments will not be sent.

National Environmental Policy Act. This proposed rule is categorically excluded from the requirements of 44 CFR part 10, Environmental Consideration. An environmental impact assessment has not been prepared.

Regulatory Flexibility Act. As flood elevation determinations are not within the scope of the Regulatory Flexibility Act, 5 U.S.C. 601–612, a regulatory flexibility analysis is not required.

Executive Order 12866, Regulatory Planning and Review. This proposed rule is not a significant regulatory action under the criteria of section 3(f) of Executive Order 12866, as amended.

Executive Order 13132, Federalism. This proposed rule involves no policies that have federalism implications under Executive Order 13132.

Executive Order 12988, Civil Justice Reform. This proposed rule meets the applicable standards of Executive Order 12988.

List of Subjects in 44 CFR Part 67

Administrative practice and procedure, Flood insurance, Reporting and recordkeeping requirements.

Accordingly, 44 CFR part 67 is proposed to be amended as follows:

PART 67—[AMENDED]

1. The authority citation for part 67 continues to read as follows:

Authority: 42 U.S.C. 4001 *et seq.*; Reorganization Plan No. 3 of 1978, 3 CFR, 1978 Comp., p. 329; E.O. 12127, 44 FR 19367, 3 CFR, 1979 Comp., p. 376.

§ 67.4 [Amended]

2. The tables published under the authority of § 67.4 are proposed to be amended as follows:

Flooding source(s)	Location of referenced elevation**	* Elevation in feet (NGVD) + Elevation in feet (NAVD) # Depth in feet above ground		Communities affected
		Effective	Modified	
Madison County, Indiana, and Incorporated Areas				
Alexandria Creek	Approximately 150 feet upstream of confluence with Pipe Creek.	+852	+853	City of Alexandria, Unincorporated Areas of Madison County.
	Approximately 2,100 feet upstream of Eleventh Street.	None	+861	

Flooding source(s)	Location of referenced elevation**	* Elevation in feet (NGVD) + Elevation in feet (NAVD) # Depth in feet above ground		Communities affected
		Effective	Modified	
Big Duck Creek	At South P Street	None	+843	City of Elwood, Unincorporated Areas of Madison County.
	Approximately 1,700 feet upstream of North 20th Street.	None	+856	
Boland Ditch	Approximately 700 feet downstream of Meadowbrook Parkway.	None	+872	City of Anderson.
	Approximately 4,190 feet upstream of Main Street	None	+881	
Fall Creek	Approximately 630 feet downstream of Reformatory Road.	None	+821	Unincorporated Areas of Madison County.
	Approximately 9,980 feet upstream of State Route 67.	None	+862	
Foster Branch	Approximately 2,060 feet downstream of Fall Creek Road.	None	+816	Unincorporated Areas of Madison County, Town of Ingalls, Town of Pendleton.
	Approximately 240 feet upstream of Old State Road 132.	None	+860	
Pipe Creek	Approximately 1,425 feet downstream of Conrail Railroad.	None	+820	City of Alexandria, Unincorporated Areas of Madison County.
	Approximately 2,690 feet upstream of Washington Street.	None	+857	
Prairie Creek	Approximately 2,460 feet upstream of State Route 67.	None	+851	Unincorporated Areas of Madison County.
	Approximately 4,460 feet upstream of State Route 67.	None	+851	
West Fork White River	At State Route 13 North	None	+805	City of Anderson, River Forest, Town of Chesterfield, Town of Country Club Heights, Town of Woodlawn Height, Unincorporated Areas of Madison County.
	At North 500 East/County Line Road/South 1000 West.	None	+872	

* National Geodetic Vertical Datum.
+ North American Vertical Datum.
# Depth in feet above ground.
** BFEs to be changed include the listed downstream and upstream BFEs, and include BFEs located on the stream reach between the referenced locations above. Please refer to the revised Flood Insurance Rate Map located at the community map repository (see below) for exact locations of all BFEs to be changed.

Send comments to William R. Blanton, Jr., Chief, Engineering Management Branch, Mitigation Directorate, Federal Emergency Management Agency, 500 C Street SW., Washington, DC 20472.

ADDRESSES

City of Alexandria
Maps are available for inspection at City of Alexandria Office, 125 North Wayne Street, Alexandria, IN 46001.

City of Anderson
Maps are available for inspection at City Building, 120 E. 8th Street, Anderson, IN 46016.

City of Elwood
Maps are available for inspection at City Hall, 1505 South B Street, Elwood, IN 46036.

River Forest
Maps are available for inspection at 53 River Forest, Anderson, IN 46011.

Town of Chesterfield
Maps are available for inspection at Chesterfield Government Center, 17 Veterans Boulevard, Chesterfield, IN 46017.

Town of Country Club Heights
Maps are available for inspection at 1202 North Madison Avenue, Anderson, IN 46011.

Town of Ingalls
Maps are available for inspection at Ingalls Town Center, 247 Meridian Street, Ingalls, IN 46048.

Town of Pendleton
Maps are available for inspection at Pendleton Town Halll, 100 West State Street, Pendleton, IN 46064.

Town of Woodlawn Height
Maps are available for inspection at 1301 Van Buskirk Road, Anderson, IN 46011.

Unincorporated Areas of Madison County
Maps are available for inspection at Madison County Government Center, 16 East 9th Street, Room 200, Anderson, IN 46018.

Flooding source(s)	Location of referenced elevation**	* Elevation in feet (NGVD) + Elevation in feet (NAVD) # Depth in feet above ground		Communities affected
		Effective	Modified	
Livingston County, Kentucky and Incorporated Areas				
Kentucky Lake	Approximately 1500 feet downstream of Barkley Canal.	None	+375	Unincorporated Areas of Livingston County, City of Grand Rivers.
	Just upstream of Kentucky Dam	None	+375	
Lake Barkley	Just upstream of Barkley Dam	None	+375	Unincorporated Areas of Livingston County, City of Grand Rivers.
	2300 feet downstream of Barkley Canal	None	+375	
Ohio River	Just upstream of the confluence with Tennessee River.	None	+340	Unincorporated Areas of Livingston County, City of Carrsville, City of Smithland.
	Approximately 3500 feet upstream of the confluence with Deer Creek.	None	+356	
Tennessee River	Approximately 5100 feet downstream of the confluence with Hodges Creek.	None	+341	Unincorporated Areas of Livingston County.
	Just downstream of Kentucky Dam	None	+343	

* National Geodetic Vertical Datum.
+ North American Vertical Datum.
# Depth in feet above ground.
** BFEs to be changed include the listed downstream and upstream BFEs, and include BFEs located on the stream reach between the referenced locations above. Please refer to the revised Flood Insurance Rate Map located at the community map repository (see below) for exact locations of all BFEs to be changed.

Send comments to William R. Blanton, Jr., Chief, Engineering Management Branch, Mitigation Directorate, Federal Emergency Management Agency, 500 C Street SW., Washington, DC 20472.

ADDRESSES

City of Carrsville

Maps are available for inspection at 1810 Fleet Street, Carrsville, KY 42081.

City of Grand Rivers

Maps are available for inspection at 122 West Cumberland Avenue, Grand Rivers, KY 42045.

City of Smithland

Maps are available for inspection at 310 Wilson Avenue, Smithland, KY 42081.

Unincorporated Areas of Livingston County

Maps are available for inspection at 339 Courthouse Drive, Smithland, KY 42081.

Claiborne County, Mississippi, and Incorporated Areas				
Bayou Pierre	30,000 Feet Downstream of Anthony Road	None	+92	Unincorporated Areas of Claiborne County.
	8100 Feet Downstream of Anthony Road	None	+96	

* National Geodetic Vertical Datum.
+ North American Vertical Datum.
# Depth in feet above ground.
** BFEs to be changed include the listed downstream and upstream BFEs, and include BFEs located on the stream reach between the referenced locations above. Please refer to the revised Flood Insurance Rate Map located at the community map repository (see below) for exact locations of all BFEs to be changed.

Send comments to William R. Blanton, Jr., Chief, Engineering Management Branch, Mitigation Directorate, Federal Emergency Management Agency, 500 C Street SW., Washington, DC 20472.

ADDRESSES

Unincorporated Areas of Claiborne County

Maps are available for inspection at 410 Main Street, Port Gibson, MS 39150.

(Catalog of Federal Domestic Assistance No. 97.022, ''Flood Insurance.'')

Dated: February 6, 2009.

Michael K. Buckley,

Acting Assistant Administrator, Mitigation Directorate, Department of Homeland Security, Federal Emergency Management Agency.

[FR Doc. E9–6678 Filed 3–24–09; 8:45 am]

BILLING CODE 9110–12–P

DEPARTMENT OF HOMELAND SECURITY

Federal Emergency Management Agency

44 CFR Part 67

[Docket ID FEMA–2008–0020; Internal Agency Docket No. FEMA–B–1043]

Proposed Flood Elevation Determinations

AGENCY: Federal Emergency Management Agency, DHS.

ACTION: Proposed rule.

SUMMARY: Comments are requested on the proposed Base (1 percent annual-chance) Flood Elevations (BFEs) and proposed BFE modifications for the communities listed in the table below. The purpose of this notice is to seek general information and comment regarding the proposed regulatory flood elevations for the reach described by the downstream and upstream locations in the table below. The BFEs and modified BFEs are a part of the floodplain management measures that the community is required either to adopt or show evidence of having in effect in order to qualify or remain qualified for participation in the National Flood Insurance Program (NFIP). In addition, these elevations, once finalized, will be used by insurance agents, and others to calculate appropriate flood insurance premium rates for new buildings and the contents in those buildings.

DATES: Comments are to be submitted on or before June 23, 2009.

ADDRESSES: The corresponding preliminary Flood Insurance Rate Map (FIRM) for the proposed BFEs for each community are available for inspection at the community's map repository. The respective addresses are listed in the table below.

You may submit comments, identified by Docket No. FEMA–B–1043, to William R. Blanton, Jr., Chief, Engineering Management Branch, Mitigation Directorate, Federal Emergency Management Agency, 500 C Street, SW., Washington, DC 20472, (202) 646–3151, or (e-mail) *bill.blanton@dhs.gov.*

FOR FURTHER INFORMATION CONTACT: William R. Blanton, Jr., Chief, Engineering Management Branch, Mitigation Directorate, Federal Emergency Management Agency, 500 C Street, SW., Washington, DC 20472, (202) 646–3151 or (e-mail) *bill.blanton@dhs.gov.*

SUPPLEMENTARY INFORMATION: The Federal Emergency Management Agency (FEMA) proposes to make determinations of BFEs and modified BFEs for each community listed below, in accordance with section 110 of the Flood Disaster Protection Act of 1973, 42 U.S.C. 4104, and 44 CFR 67.4(a).

These proposed BFEs and modified BFEs, together with the floodplain management criteria required by 44 CFR 60.3, are the minimum that are required. They should not be construed to mean that the community must change any existing ordinances that are more stringent in their floodplain management requirements. The community may at any time enact stricter requirements of its own, or pursuant to policies established by other Federal, State, or regional entities. These proposed elevations are used to meet the floodplain management requirements of the NFIP and are also used to calculate the appropriate flood insurance premium rates for new buildings built after these elevations are made final, and for the contents in these buildings.

Comments on any aspect of the Flood Insurance Study and FIRM, other than the proposed BFEs, will be considered. A letter acknowledging receipt of any comments will not be sent.

National Environmental Policy Act. This proposed rule is categorically excluded from the requirements of 44 CFR part 10, Environmental Consideration. An environmental impact assessment has not been prepared.

Regulatory Flexibility Act. As flood elevation determinations are not within the scope of the Regulatory Flexibility Act, 5 U.S.C. 601–612, a regulatory flexibility analysis is not required.

Executive Order 12866, Regulatory Planning and Review. This proposed rule is not a significant regulatory action under the criteria of section 3(f) of Executive Order 12866, as amended.

Executive Order 13132, Federalism. This proposed rule involves no policies that have federalism implications under Executive Order 13132.

Executive Order 12988, Civil Justice Reform. This proposed rule meets the applicable standards of Executive Order 12988.

List of Subjects in 44 CFR Part 67

Administrative practice and procedure, Flood insurance, Reporting and recordkeeping requirements.

Accordingly, 44 CFR part 67 is proposed to be amended as follows:

PART 67—[AMENDED]

1. The authority citation for part 67 continues to read as follows:

Authority: 42 U.S.C. 4001 *et seq.;* Reorganization Plan No. 3 of 1978, 3 CFR, 1978 Comp., p. 329; E.O. 12127, 44 FR 19367, 3 CFR, 1979 Comp., p. 376.

§ 67.4 [Amended]

2. The tables published under the authority of § 67.4 are proposed to be amended as follows:

Flooding source(s)	Location of referenced elevation**	* Elevation in feet (NGVD) + Elevation in feet (NAVD) # Depth in feet above ground ∧ Elevation in meters (MSL)		Communities affected
		Effective	Modified	
Cumberland County, Kentucky and Incorporated Areas				
Cumberland River	Approximately 3,300 feet downstream of the confluence with Judio Creek.	None	+533	Cumberland County, City of Burkesville.
	Approximately 1,500 feet upstream of the confluence with Crow Creek.	None	+568	

Flooding source(s)	Location of referenced elevation**	* Elevation in feet (NGVD) + Elevation in feet (NAVD) # Depth in feet above ground ∧ Elevation in meters (MSL)		Communities affected
		Effective	Modified	
Dale Hollow Lake (Obey River).	Approximately 5,000 feet downstream confluence with Hendricks Creek.	None	+663	Cumberland County.
	At the confluence with Illwill Creek	None	+663	

* National Geodetic Vertical Datum.
+ North American Vertical Datum.
# Depth in feet above ground.
∧ Mean Sea Level, rounded to the nearest 0.1 meter.
** BFEs to be changed include the listed downstream and upstream BFEs, and include BFEs located on the stream reach between the referenced locations above. Please refer to the revised Flood Insurance Rate Map located at the community map repository (see below) for exact locations of all BFEs to be changed.

Send comments to William R. Blanton, Jr., Chief, Engineering Management Branch, Mitigation Directorate, Federal Emergency Management Agency, 500 C Street, SW., Washington, DC 20472.

ADDRESSES

City of Burkesville

Maps are available for inspection at 600 Courthouse Square, Burkesville, KY 42717.

Cumberland County

Maps are available for inspection at 214 Upper River Street, Burkesville, KY 42717.

Jefferson Davis Parish, Louisiana and Incorporated Areas

Lake Arthur	From the shoreline of and including Lake Arthur North to 7th Street from the East to the West border of the Town of Lake Arthur.	+6	+8–10	Town of Lake Arthur, Unincorporated Areas of Jefferson Davis Parish.
Lake Charles	Covering an area beginning at the Southern Border with Cameron Parish, proceeding North along the Calcaceus Parish border to West Niblett Road, to the East to State Route 99. From State Route 99 below State Route 380 to the Town of Lake Charles border.	+5–8	+7–11	Unincorporated Areas of Jefferson Davis Parish.

* National Geodetic Vertical Datum.
+ North American Vertical Datum.
# Depth in feet above ground.
∧ Mean Sea Level, rounded to the nearest 0.1 meter.
** BFEs to be changed include the listed downstream and upstream BFEs, and include BFEs located on the stream reach between the referenced locations above. Please refer to the revised Flood Insurance Rate Map located at the community map repository (see below) for exact locations of all BFEs to be changed.

Send comments to William R. Blanton, Jr., Chief, Engineering Management Branch, Mitigation Directorate, Federal Emergency Management Agency, 500 C Street, SW., Washington, DC 20472.

ADDRESSES

Town of Lake Arthur

Maps are available for inspection at 102 Arthur Avenue, Lake Arthur, LA 70549.

Unincorporated Areas of Jefferson Davis Parish

Maps are available for inspection at 304 North State Street, Jennings, LA 70546.

Laclede County, Missouri and Incorporated Areas

Radio Tower Branch	Approximately 2,500 feet upstream from the confluence with Goodwin Hallow.	None	+1166	City of Lebanon.
	Approximately 3,150 feet upstream from the confluence with Goodwin Hallow.	None	+1170	

* National Geodetic Vertical Datum.
+ North American Vertical Datum.
# Depth in feet above ground.
∧ Mean Sea Level, rounded to the nearest 0.1 meter.
** BFEs to be changed include the listed downstream and upstream BFEs, and include BFEs located on the stream reach between the referenced locations above. Please refer to the revised Flood Insurance Rate Map located at the community map repository (see below) for exact locations of all BFEs to be changed.

Send comments to William R. Blanton, Jr., Chief, Engineering Management Branch, Mitigation Directorate, Federal Emergency Management Agency, 500 C Street, SW., Washington, DC 20472.

ADDRESSES

City of Lebanon

Flooding source(s)	Location of referenced elevation**	* Elevation in feet (NGVD) + Elevation in feet (NAVD) # Depth in feet above ground ∧ Elevation in meters (MSL)		Communities affected
		Effective	Modified	
Maps are available for inspection at 400 S. Madison, Lebanon, MO 65536.				
McDonald County, Missouri and Incorporated Areas				
Beaver Branch	Just downstream of Main Street	None	+884	City of Anderson, Unincorporated Areas of McDonald County.
	Approximately 1.14 miles upstream from Sellers Street.	None	+931	
Indian Creek	Approximately 1.15 miles downstream from the confluence of Wild Creek.	None	+868	City of Anderson, Unincorporated Areas of McDonald County.
	Approximately 2.79 miles upstream from Highway 71	None	+923	
Sugar Tree Branch	Just downstream of East Street	None	+888	City of Anderson, Unincorporated Areas of McDonald County.
	Approximately 1,785 feet upstream from Highway F	None	+948	
Wild Creek	Approximately 700 feet downstream from Highway 59	None	+878	City of Anderson, Unincorporated Areas of McDonald County.
	Approximately 410 feet upstream from Highway 76	None	+1002	

* National Geodetic Vertical Datum.
+ North American Vertical Datum.
# Depth in feet above ground.
∧ Mean Sea Level, rounded to the nearest 0.1 meter.
** BFEs to be changed include the listed downstream and upstream BFEs, and include BFEs located on the stream reach between the referenced locations above. Please refer to the revised Flood Insurance Rate Map located at the community map repository (see below) for exact locations of all BFEs to be changed.

Send comments to William R. Blanton, Jr., Chief, Engineering Management Branch, Mitigation Directorate, Federal Emergency Management Agency, 500 C Street, SW., Washington, DC 20472.

ADDRESSES

City of Anderson

Maps are available for inspection at 201 West Beaver Street, Anderson, MO 64831.

Unincorporated Areas of Mcdonald County

Maps are available for inspection at 602 Main Street, Pineville, MO 64856.

Ross County, Ohio and Incorporated Areas				
Kinnikinnick Creek	1,850 feet upstream from the confluence of Kinnikinnick Creek and Scioto River.	None	+645	Unincorporated Areas of Ross County.
	11,050 feet upstream from confluence of Kinnikinnick Creek and Scioto River.	None	+666	

* National Geodetic Vertical Datum.
+ North American Vertical Datum.
# Depth in feet above ground.
∧ Mean Sea Level, rounded to the nearest 0.1 meter.
** BFEs to be changed include the listed downstream and upstream BFEs, and include BFEs located on the stream reach between the referenced locations above. Please refer to the revised Flood Insurance Rate Map located at the community map repository (see below) for exact locations of all BFEs to be changed.

Send comments to William R. Blanton, Jr., Chief, Engineering Management Branch, Mitigation Directorate, Federal Emergency Management Agency, 500 C Street, SW., Washington, DC 20472.

ADDRESSES

Unincorporated Areas of Ross County

Maps are available for inspection at 15 N. Paint Street, Chillicothe, OH 45601.

Nacogdoches County, Texas and Incorporated Areas				
Bayou La Nana	Approximately 1,246 feet upstream of the confluence with Bayou La Nana and Egg Nog Branch.	None	+248	Unincorporated Areas of Nacogdoches County.
	Approximately 523 feet downstream of Loop 224	None	+255	
Bayou La Nana	Approximately 921 feet upstream of Loop 224	None	+317	Unincorporated Areas of Nacogdoches County, City of Nacogdoches.
	Just upstream of Old Post Oak Road	None	+320	

Flooding source(s)	Location of referenced elevation**	* Elevation in feet (NGVD) + Elevation in feet (NAVD) # Depth in feet above ground ∧ Elevation in meters (MSL)		Communities affected
		Effective	Modified	
Bonita Creek	Approximately 729 feet upstream of Loop 224	None	+355	Unincorporated Areas of Nacogdoches County, City of Nacogdoches.
	Just upstream of U.S. Highway 59	None	+373	
Egg Nog Branch	Approximately 1,246 feet upstream of the confluence with Egg Nog Branch and Bayou La Nana.	None	+248	Unincorporated Areas of Nacogdoches County, City of Nacogdoches.
	Approximately 727 feet downstream of Loop 224	None	+284	
Toliver Branch	Confluence of Bayou La Nana and Toliver Branch	None	+317	Unincorporated Areas of Nacogdoches County, City of Nacogdoches.
	Just upstream of Old Post Oak Road	None	+320	

* National Geodetic Vertical Datum.
+ North American Vertical Datum.
# Depth in feet above ground.
∧ Mean Sea Level, rounded to the nearest 0.1 meter.
** BFEs to be changed include the listed downstream and upstream BFEs, and include BFEs located on the stream reach between the referenced locations above. Please refer to the revised Flood Insurance Rate Map located at the community map repository (see below) for exact locations of all BFEs to be changed.

Send comments to William R. Blanton, Jr., Chief, Engineering Management Branch, Mitigation Directorate, Federal Emergency Management Agency, 500 C Street, SW., Washington, DC 20472.

ADDRESSES

City of Nacogdoches

Maps are available for inspection at City Hall, 202 East pilar Street, Nacogdoches, TX 75963.

Unincorporated Areas of Nacogdoches County

Maps are available for inspection at 101 W. Main, Nacogdoches, TX 75961.

Rusk County, Texas and Incorporated Areas

Unnamed Stream off of Turkey Creek.	At the confluence of Turkey Creek and Unnamed Stream.	None	+329	City of Henderson.
	Approximately 110 feet downstream from Florence Street.	None	+336	

* National Geodetic Vertical Datum.
+ North American Vertical Datum.
# Depth in feet above ground.
∧ Mean Sea Level, rounded to the nearest 0.1 meter.
** BFEs to be changed include the listed downstream and upstream BFEs, and include BFEs located on the stream reach between the referenced locations above. Please refer to the revised Flood Insurance Rate Map located at the community map repository (see below) for exact locations of all BFEs to be changed.

Send comments to William R. Blanton, Jr., Chief, Engineering Management Branch, Mitigation Directorate, Federal Emergency Management Agency, 500 C Street, SW., Washington, DC 20472.

ADDRESSES

City of Henderson

Maps are available for inspection at Town Hall, 400 West Main Street, Henderson, TX 75652.

Tom Green County, Texas and Incorporated Areas

Flooding Effects of Red Arroyo.	Just upstream of Melrose Avenue	None	+1900	City of San Angelo.
	Just downstream of Burlington Road	None	+1922	

* National Geodetic Vertical Datum.
+ North American Vertical Datum.
# Depth in feet above ground.
∧ Mean Sea Level, rounded to the nearest 0.1 meter.
** BFEs to be changed include the listed downstream and upstream BFEs, and include BFEs located on the stream reach between the referenced locations above. Please refer to the revised Flood Insurance Rate Map located at the community map repository (see below) for exact locations of all BFEs to be changed.

Send comments to William R. Blanton, Jr., Chief, Engineering Management Branch, Mitigation Directorate, Federal Emergency Management Agency, 500 C Street, SW., Washington, DC 20472.

Flooding source(s)	Location of referenced elevation**	* Elevation in feet (NGVD) + Elevation in feet (NAVD) # Depth in feet above ground ∧ Elevation in meters (MSL)		Communities affected
		Effective	Modified	

ADDRESSES

City of San Angelo

Maps are available for inspection at PO BOX 1751, San Angelo, TX 76902.

(Catalog of Federal Domestic Assistance No. 97.022, ''Flood Insurance.'')

Dated: March 2, 2009.

Michael K. Buckley,

Acting Assistant Administrator, Mitigation Directorate, Department of Homeland Security, Federal Emergency Management Agency.

[FR Doc. E9–6711 Filed 3–24–09; 8:45 am]

BILLING CODE 9110–12–P

DEPARTMENT OF HOMELAND SECURITY

Federal Emergency Management Agency

44 CFR Part 67

[Docket ID FEMA–2008–0020; Internal Agency Docket No. FEMA–B–1045]

Proposed Flood Elevation Determinations

AGENCY: Federal Emergency Management Agency, DHS.

ACTION: Proposed rule.

SUMMARY: Comments are requested on the proposed Base (1 percent annual-chance) Flood Elevations (BFEs) and proposed BFE modifications for the communities listed in the table below. The purpose of this notice is to seek general information and comment regarding the proposed regulatory flood elevations for the reach described by the downstream and upstream locations in the table below. The BFEs and modified BFEs are a part of the floodplain management measures that the community is required either to adopt or show evidence of having in effect in order to qualify or remain qualified for participation in the National Flood Insurance Program (NFIP). In addition, these elevations, once finalized, will be used by insurance agents and others to calculate appropriate flood insurance premium rates for new buildings and the contents in those buildings.

DATES: Comments are to be submitted on or before June 23, 2009.

ADDRESSES: The corresponding preliminary Flood Insurance Rate Map (FIRM) for the proposed BFEs for each community are available for inspection at the community's map repository. The respective addresses are listed in the table below.

You may submit comments, identified by Docket No. FEMA–B–xxxx, to William R. Blanton, Jr., Chief, Engineering Management Branch, Mitigation Directorate, Federal Emergency Management Agency, 500 C Street, SW., Washington, DC 20472, (202) 646–3151, or (e-mail) *bill.blanton@dhs.gov*.

FOR FURTHER INFORMATION CONTACT: William R. Blanton, Jr., Chief, Engineering Management Branch, Mitigation Directorate, Federal Emergency Management Agency, 500 C Street, SW., Washington, DC 20472, (202) 646–3151 or (email) *bill.blanton@dhs.gov*.

SUPPLEMENTARY INFORMATION: The Federal Emergency Management Agency (FEMA) proposes to make determinations of BFEs and modified BFEs for each community listed below, in accordance with section 110 of the Flood Disaster Protection Act of 1973, 42 U.S.C. 4104, and 44 CFR 67.4(a).

These proposed BFEs and modified BFEs, together with the floodplain management criteria required by 44 CFR 60.3, are the minimum that are required. They should not be construed to mean that the community must change any existing ordinances that are more stringent in their floodplain management requirements. The community may at any time enact stricter requirements of its own, or pursuant to policies established by other Federal, State, or regional entities. These proposed elevations are used to meet the floodplain management requirements of the NFIP and are also used to calculate the appropriate flood insurance premium rates for new buildings built after these elevations are made final, and for the contents in these buildings.

Comments on any aspect of the Flood Insurance Study and FIRM, other than the proposed BFEs, will be considered. A letter acknowledging receipt of any comments will not be sent.

National Environmental Policy Act. This proposed rule is categorically excluded from the requirements of 44 CFR part 10, Environmental Consideration. An environmental impact assessment has not been prepared.

Regulatory Flexibility Act. As flood elevation determinations are not within the scope of the Regulatory Flexibility Act, 5 U.S.C. 601–612, a regulatory flexibility analysis is not required.

Executive Order 12866, Regulatory Planning and Review. This proposed rule is not a significant regulatory action under the criteria of section 3(f) of Executive Order 12866, as amended.

Executive Order 13132, Federalism. This proposed rule involves no policies that have federalism implications under Executive Order 13132.

Executive Order 12988, Civil Justice Reform. This proposed rule meets the applicable standards of Executive Order 12988.

List of Subjects in 44 CFR Part 67

Administrative practice and procedure, Flood insurance, Reporting and recordkeeping requirements.

Accordingly, 44 CFR part 67 is proposed to be amended as follows:

PART 67—[AMENDED]

1. The authority citation for part 67 continues to read as follows:

Authority: 42 U.S.C. 4001 *et seq.*; Reorganization Plan No. 3 of 1978, 3 CFR, 1978 Comp., p. 329; E.O. 12127, 44 FR 19367, 3 CFR, 1979 Comp., p. 376.

§ 67.4 [Amended]

2. The tables published under the authority of § 67.4 are proposed to be amended as follows:

Flooding source(s)	Location of referenced elevation **	* Elevation in feet (NGVD) + Elevation in feet (NAVD) # Depth in feet above ground ∧ Elevation in meters (MSL)		Communities affected
		Effective	Modified	
Crittenden County, Arkansas, and Incorporated Areas				
Mississippi River	Approximately at River Mile 741	None	+234	Crittenden County.
	Approximately at River Mile 750	None	+237	
	Approximately at River Mile 700	None	+212	
	Approximately at River Mile 727	None	+226	

* National Geodetic Vertical Datum.
+ North American Vertical Datum.
# Depth in feet above ground.
∧ Mean Sea Level, rounded to the nearest 0.1 meter.
** BFEs to be changed include the listed downstream and upstream BFEs, and include BFEs located on the stream reach between the referenced locations above. Please refer to the revised Flood Insurance Rate Map located at the community map repository (see below) for exact locations of all BFEs to be changed.

Send comments to William R. Blanton, Jr., Chief, Engineering Management Branch, Mitigation Directorate, Federal Emergency Management Agency, 500 C Street, SW., Washington, DC 20472.

ADDRESSES

Crittenden County

Maps are available for inspection at County Courthouse, 85 Jackson Street, Marion, AR 72482.

Mississippi County, Arkansas, and Incorporated Areas				
Mississippi River	Approximately at River Mile 755	None	+238	Unincorporated Areas of Mississippi County, City of Luxora.
	Approximately at River Mile 818	None	+268	

* National Geodetic Vertical Datum.
+ North American Vertical Datum.
# Depth in feet above ground.
∧ Mean Sea Level, rounded to the nearest 0.1 meter.
** BFEs to be changed include the listed downstream and upstream BFEs, and include BFEs located on the stream reach between the referenced locations above. Please refer to the revised Flood Insurance Rate Map located at the community map repository (see below) for exact locations of all BFEs to be changed.

Send comments to William R. Blanton, Jr., Chief, Engineering Management Branch, Mitigation Directorate, Federal Emergency Management Agency, 500 C Street, SW., Washington, DC 20472.

ADDRESSES

City of Luxora

Maps are available for inspection at 204 North Main Street, Luxora, AR 72358.

Unincorporated Areas of Mississippi County

Maps are available for inspection at 200 West Walnut, Blytheville, AR 8707635110.

Phillips County, Arkansas, and Incorporated Areas				
Mississippi River	Approximately at River Mile 664	None	+198	Unincorporated Areas of Phillips County.
	Approximately at River Mile 673	None	+202	
	Approximately at River Mile 618	None	+174	
	Approximately at River Mile 662	None	+197	

* National Geodetic Vertical Datum.
+ North American Vertical Datum.
# Depth in feet above ground.
∧ Mean Sea Level, rounded to the nearest 0.1 meter.
** BFEs to be changed include the listed downstream and upstream BFEs, and include BFEs located on the stream reach between the referenced locations above. Please refer to the revised Flood Insurance Rate Map located at the community map repository (see below) for exact locations of all BFEs to be changed.

Send comments to William R. Blanton, Jr., Chief, Engineering Management Branch, Mitigation Directorate, Federal Emergency Management Agency, 500 C Street, SW., Washington, DC 20472.

ADDRESSES

Unincorporated Areas of Phillips County

Maps are available for inspection at 620 Cherry Street, Suite 208, Helena, AR 72342.

Flooding source(s)	Location of referenced elevation **	* Elevation in feet (NGVD) + Elevation in feet (NAVD) # Depth in feet above ground ∧ Elevation in meters (MSL)		Communities affected
		Effective	Modified	
Garvin County, Oklahoma, and Incorporated Areas				
.				
Beef Creek	Approximately 350 feet upstream of the confluence with Washita River.	None	+924	Garvin County.
	Just downstream of East 1520 Road	None	+956	
Washita River	Approximately 6,500 feet upstream of Highway 76	None	+979	Town of Erin Springs.
	Approximately 7,000 feet upstream of Highway 76	None	+979	

* National Geodetic Vertical Datum.
+ North American Vertical Datum.
# Depth in feet above ground.
∧ Mean Sea Level, rounded to the nearest 0.1 meter.
** BFEs to be changed include the listed downstream and upstream BFEs, and include BFEs located on the stream reach between the referenced locations above. Please refer to the revised Flood Insurance Rate Map located at the community map repository (see below) for exact locations of all BFEs to be changed.

Send comments to William R. Blanton, Jr., Chief, Engineering Management Branch, Mitigation Directorate, Federal Emergency Management Agency, 500 C Street, SW., Washington, DC 20472.

ADDRESSES

Garvin County
Maps are available for inspection at 201 W. Grant Avenue, Pauls Valley, OK 73075.

Town of Erin Springs
Maps are available for inspection at 201 W. Grant Avenue, Pauls Valley, OK 73075.

Lamar County, Texas, and Incorporated Areas				
Baker Branch	Approximately 799 feet downstream of Loop 286	None	+503	City of Paris, Unincorporated Areas of Lamar County.
	Approximately 1,002 feet upstream of Bonham Street	None	+572	
Baker Branch Tributary #10	Just downstream of the confluence with Baker Branch	None	+537	City of Paris, Unincorporated Areas of Lamar County.
	Approximately 503 feet upstream of Sherman Street	None	+560	
Baker Branch Tributary #24	Just upstream of the confluence with Baker Branch	None	+508	City of Paris, Unincorporated Areas of Lamar County.
	Approximately 59 feet downstream of 7th Street	None	+513	
Big Sand Creek Tributary #7	Just downstream of the confluence with Big Sandy Creek.	None	+532	City of Paris, Unincorporated Areas of Lamar County.
	Approximately 708 feet upstream of 17th Street	None	+569	
Big Sandy Creek	Approximately 1,300 feet downstream of Loop 286	None	+494	City of Paris, Unincorporated Areas of Lamar County.
	Approximately 475 feet upstream of Sherman Street	None	+571	
Big Sandy Creek Tributary #16.	Just upstream of the confluence with Big Sandy Creek Tributary #4.	None	+536	City of Paris, Unincorporated Areas of Lamar County.
	Just upstream of Cherry Street	None	+568	
Big Sandy Creek Tributary #2.	Just upstream of the confluence with Big Sandy Creek.	None	+502	City of Paris, Unincorporated Areas of Lamar County.
	Approximately 647 feet upstream of Lamar Avenue	None	+546	
Big Sandy Creek Tributary #3.	Just upstream of Houston Street	None	+557	City of Paris, Unincorporated Areas of Lamar County.
	Just upstream of the confluence with Big Sandy Creek.	None	+588	
Big Sandy Creek Tributary #4.	Just downstream of the confluence with Big Sandy Creek.	None	+516	City of Paris, Unincorporated Areas of Lamar County.
	Approximately 888 feet upstream of Price Street	None	+562	
Big Sandy Creek Tributary #8.	Just downstream of the confluence with Big Sandy Creek.	None	+546	City of Paris, Unincorporated Areas of Lamar County.

Flooding source(s)	Location of referenced elevation **	* Elevation in feet (NGVD) + Elevation in feet (NAVD) # Depth in feet above ground ∧ Elevation in meters (MSL)		Communities affected
		Effective	Modified	
Cottonwood Branch Tributary #11.	Approximately 1,045 feet upstream of Hearon Street	None	+574	City of Paris, Unincorporated Areas of Lamar County.
	Approximately 75 feet downstream of Old Brookston Road.	None	+516	
Pine Creek Tributary #12	Approximately 377 feet upstream of Austin Street	None	+584	City of Paris, Unincorporated Areas of Lamar County.
	Approximately 852 feet downstream of the confluence with Pine Creek Tributary #13.	None	+506	
Pine Creek Tributary #13	Approximately 194 feet downstream of the confluence with Old City Lake.	None	+524	City of Paris, Unincorporated Areas of Lamar County.
	Just upstream of the confluence with Pine Creek Tributary #12.	None	+508	
Smith Creek	Approximately 184 feet upstream of 28th Street	None	+557	City of Paris, Unincorporated Areas of Lamar County.
	Just downstream of the confluence with Smith Creek Tributary #15.	None	+518	
Smith Creek Tributary #15	Just upstream of Center Street	None	+521	City of Paris, Unincorporated Areas of Lamar County.
	Just upstream of Center Street	None	+524	
Stillhouse Creek Tributary #20.	Approximately 236 feet downstream of Houston Street.	+581	+588	City of Paris, Unincorporated Areas of Lamar County.
	Approximately 227 feet downstream of Spur 139	None	+514	
Stillhouse Creek Tributary #21.	Approximately 44 feet upstream of Ridgeview Street ..	None	+573	City of Paris, Unincorporated Areas of Lamar County.
	Just downstream of the confluence with Stillhouse Creek Tributary #20.	None	+526	
Stillhouse Creek Tributary #22.	Approximately 32 feet downstream of Belmont Street	None	+581	City of Paris, Unincorporated Areas of Lamar County.
	Just downstream of Highway 195	None	+508	
Stillhouse Creek Tributary #23.	Approximately 170 feet upstream of Loop 535	None	+537	City of Paris, Unincorporated Areas of Lamar County.
	Just downstream of the confluence with Stillhouse Creek Tributary #22.	None	+521	
	Approximately 43 feet downstream of Loop 286	None	+539	

* National Geodetic Vertical Datum.
+ North American Vertical Datum.
# Depth in feet above ground.
∧ Mean Sea Level, rounded to the nearest 0.1 meter.
** BFEs to be changed include the listed downstream and upstream BFEs, and include BFEs located on the stream reach between the referenced locations above. Please refer to the revised Flood Insurance Rate Map located at the community map repository (see below) for exact locations of all BFEs to be changed.

Send comments to William R. Blanton, Jr., Chief, Engineering Management Branch, Mitigation Directorate, Federal Emergency Management Agency, 500 C Street, SW., Washington, DC 20472.

ADDRESSES

City of Paris

Maps are available for inspection at PO Box 9037, Paris, TX 75461–9037.

Unincorporated Areas of Lamar County

Maps are available for inspection at 119 N Main Street, Paris, TX 75460.

Montgomery County, Texas, and Incorporated Areas

Alligator Creek Flooding Effects, its West Branch and its West Fork.	At the confluence of West Fork of San Jacinto River and Alligator Creek.	None	+133	Unincorporated Areas of Montgomery County, City of Conroe.
	Approximately 375 feet upstream of Hillcrest Road	None	+195	
	Approximately 650 feet upstream of Hillcrest Road	None	+215	
	Just upstream of State Highway 336 and Alligator Creek.	None	+238	
Arnold Branch Flooding Effects.	At the confluence of Mink Branch and Arnold Branch	None	+203	Unincorporated Areas of Montgomery County.

Flooding source(s)	Location of referenced elevation **	* Elevation in feet (NGVD) + Elevation in feet (NAVD) # Depth in feet above ground ∧ Elevation in meters (MSL)		Communities affected
		Effective	Modified	
	Approximately 800 feet downstream of Grand Oaks Boulevard.	None	+214	
	Approximately 2,100 feet upstream of Nichols Sawmill Road.	None	+227	
	Approximately 2.34 miles downstream of Doodson Road.	None	+246	
Bear Branch Flooding Effects	Approximately 2,500 feet downstream of Sawdust Road.	None	+117	Unincorporated Areas of Montgomery County.
	Just downstream of Woodlands Parkway	None	+123	
	At the confluence of Panther Branch and Bear Branch	None	+140	
	Approximately 100 feet downstream from Kuykendahl Road.	None	+157	
Bee Branch Flooding Effects	Approximately 1.1 miles upstream of the confluence with Jayhawker Creek and Bee Branch.	None	+129	Unincorporated Areas of Montgomery County.
	Just upstream of Fostoria Road	None	+142	
Bens Branch	Approximately 620 feet downstream from the Loop 494.	None	+79	Unincorporated Areas of Montgomery County.
	Just downstream of Loop 494	None	+80	
Brushy Creek Flooding Effects.	At the confluence of Spring Creek and Brushy Creek	None	+187	Unincorporated Areas of Montgomery County.
	Approximately 4,550 feet upstream from the confluence of Threemile Creek and Brushy Creek.	None	+214	
Camp Creek Flooding Effects and its Tributaries.	Just upstream of Rogers Road	None	+306	Unincorporated Areas of Montgomery County, City of Willis.
	Just upstream of African Hill Road	None	+337	
Caney Creek Flooding Effects.	At the confluence of Peach Creek and Caney Creek	None	+70	Unincorporated Areas of Montgomery County, City of Cut 'N Shoot.
	At the confluence of McRae Creek and Caney Creek	None	+183	
	Approximately 6,500 feet upstream of Bilnoski Road	None	+268	
	Approximately 9,000 feet upstream of Mt. Zion Road	None	+282	
	Approximately 15,500 feet upstream of confluence with Caney Creek.	None	+285	
Caney Creek North Flooding Effects.	At the confluence of Caney Creek Tributary No. 4 and Caney Creek North.	None	+202	Unincorporated Areas of Montgomery County.
	At the confluence of Kelly Branch and Caney Creek North.	None	+220	
Carters Slough Flooding Effects.	At the confluence of West Fork of San Jacinto River and Carters Slough.	None	+108	Unincorporated Areas of Montgomery County.
	Just upstream of unnamed Railroad and Carters Slough.	None	+124	
Crystal Creek Flooding Effects.	At the confluence of West Fork of San Jacinto River and Crystal Creek.	None	+109	Unincorporated Areas of Montgomery County, City of Conroe, City of Cut 'N Shoot.
	At the confluence of West Fork of Crystal Creek and Crystal Creek.	None	+143	
	At the confluence of Crystal Creek Tributary No. 4 and Crystal Creek.	None	+193	
	At the confluence of Crystal Creek Tributary No. 7 and Crystal Creek.	None	+240	
	Approximately 0.5 miles upstream of State Highway 75.	None	+307	
Decker Branch Flooding Effects and its Tributaries.	At the confluence of Mill Creek	None	+157	Unincorporated Areas of Montgomery County.
	Approximately 350 feet downstream from FM 1774 County Highway.	None	+208	
	Approximately 440 feet upstream from Tree Meadow Road.	None	+219	
Dry Creek Flooding Effects and its Tributaries.	At the confluence of Caney Creek and Dry Creek	None	+93	Unincorporated Areas of Montgomery County, City of Conroe.
	Just upstream of Massey Road and Dry Creek	None	+157	
Dry Creek No. 2, its Tributaries and Flooding Effects.	At the confluence of unnamed intermittent river	None	+195	Unincorporated Areas of Montgomery County.
	Approximately 190 feet downstream from Smith-Dobbin Road.	None	+214	

Flooding source(s)	Location of referenced elevation **	* Elevation in feet (NGVD) + Elevation in feet (NAVD) # Depth in feet above ground ∧ Elevation in meters (MSL)		Communities affected
		Effective	Modified	
Duck Creek Flooding Effects	At the confluence of Peach Creek and Duck Creek	None	+151	Unincorporated Areas of Montgomery County.
	Approximately 4,000 feet upstream of Duff Road	None	+191	
Goodson Branch Flooding Effects and its Tributaries.	At the conflunce of Decker Branch Tributary No. 1 and Goodson Branch.	None	+188	Unincorporated Areas of Montgomery County.
	Approximately 176 feet downstream from Goodson Loop.	None	+217	
Hightower Branch Flooding Effects.	At the confluence of Peach Creek and Hightower Branch.	None	+120	Unincorporated Areas of Montgomery County.
	Approximately 9,800 feet upstream of the confluence with Peach Creek and Hightower Branch.	None	+135	
Jayhawker Creek Flooding Effects.	Approximately 4,000 feet upstream of the confluence with Bee Branch and Jayhawker Creek.	None	+128	Unincorporated Areas of Montgomery County.
	Approximately 7,300 feet upstream of unnamed Railroad.	None	+147	
Lake Creek Flood Effects, its Tributaries and unnamed Streams.	At the confluence of West Fork of San Jacinto River and Lake Creek.	None	+133	Unincorporated Areas of Montgomery County.
	At the confluence of Lake Creek Tributary No. 2 and Lake Creek.	None	+152	
	At the confluence of Landrum Creek and Lake Creek	None	+195	
	Aproximately 5,760 feet upstream of the confluence with Kidhaw Branch and Lake Creek.	None	+260	
Lawrence Creek Flooding Effects.	At the confluence of Peach Creek and Lawrence Creek.	None	+146	Unincorporated Areas of Montgomery County.
	Aproximately 1,500 feet downstream of Walker Road and Lawrence Creek.	None	+191	
Little Caney Creek No. 3 Flooding Effects.	Approximately 2,800 feet downstream from Mount Mariah Road.	None	+223	Unincorporated Areas of Montgomery County.
	Approximately 4,300 feet upstream of Mount Mariah Road.	None	+228	
Little Lake Creek Flooding Effects.	At the confluence of Little Lake Creek Tributary No. 6 and Little Lake Creek.	None	+202	Unincorporated Areas of Montgomery County.
	Just upstream of FM11097 County Highway	None	+305	
Mares Branch Flooding Effects.	At the confluence of Peach Creek and Mares Branch	None	+96	Unincorporated Areas of Montgomery County.
	Approximately 7,000 feet upstream of the confluence of Peach Creek and Mares Branch.	None	+98	
McRae Creek Flooding Effects.	At the confluence of Caney Creek and McRae Creek	None	+184	Unincorporated Areas of Montgomery County.
	Approximately 9,850 feet upstream of Tanyard Road	None	+335	
Mill Creek Flooding Effects and its Tributaries.	At the confluence of Spring Creek and Mill Creek	None	+156	Unincorporated Areas of Montgomery County.
	Just upstream of unnamed Railroad	None	+172	
	At the confluence of Tributary No. 2 and Mill Creek ...	None	+190	
	At the confluence of Mill Creek Tributary No. 6	None	+214	
Mink Branch Flooding Effects	At the confluence of Walnut Creek and Mink Branch ..	None	+189	Unincorporated Areas of Montgomery County.
	At the confluence of Arnold Branch and Mink Branch	None	+203	
	Approximately 1,500 feet downstream of Old Hempstead Road.	None	+249	
Orton Gully Flooding Effects	At the confluence of East Fork of San Jacinto River and Orton Gully.	None	+72	Unincorporated Areas of Montgomery County.
	Approximately 750 feet upstream of Cambridge Boulevard.	None	+91	
Panther Branch Flooding Effects.	At the confluence of Spring Creek and Panther Branch.	None	+108	Unincorporated Areas of Montgomery County, City of Conroe, Town of Shenandoah.
	Just upstream of Magnolia Conroe Road	None	+181	
	Just upstream of FM 1488 County Highway	None	+191	
Peach Creek Flooding Effects and its Tributaries.	At the confluence of Caney Creek and Peach Creek ..	None	+70	Unincorporated Areas of Montgomery County, City of Splendora, Village of Patton Village, Village of Woodbranch.
	Approximately 15,000 feet upstream of the confluence with Duck Creek and Peach Creek.	None	+164	

Flooding source(s)	Location of referenced elevation **	* Elevation in feet (NGVD) + Elevation in feet (NAVD) # Depth in feet above ground ∧ Elevation in meters (MSL)		Communities affected
		Effective	Modified	
	Approximately 17,000 feet upstream of the confluence with Peach Creek Tributary No. 3 and Peach Creek.	None	+340	
	Approximately 16,500 feet upstream of the confluence with Peach Creek.	None	+367	
Pole Creek Flooding Effects	At the confluence with Little Lake Creek and Pole Creek.	None	+239	Unincorporated Areas of Montgomery County.
	Approximately 10,000 feet upstream of Martha Williams Road.	None	+297	
Sand Branch No. 2 Flooding Effects.	At the confluence with Little Lake Creek and Sand Branch No. 2.	None	+243	Unincorporated Areas of Montgomery County.
	Approximately 18,000 feet upstream of the confluence with Little Lake Creek and Sand Branch No. 2.	None	+314	
Silverdale Creek Flooding Effects.	At the confluence of West Fork of San Jacinto River and Silverdale Creek.	None	+126	Unincorporated Areas of Montgomery County, City of Conroe.
	Just upstream of Wagers Street	None	+187	
Spring Branch Flooding Effects.	At the confluence of Carney Creek and Spring Branch	None	+95	Unincorporated Areas of Montgomery County.
	Approximately 2,600 feet upstream of East Old Highway 105 Road.	None	+176	
Spring Branch No. 2 Flooding Effects.	Approximately 1,500 feet upstream from the confluence with Landrum Creek and Spring Branch No. 2.	None	+202	Unincorporated Areas of Montgomery County.
	Just upstream of Spring Branch Road	None	+264	
Spring Creek Flooding Effects into Sam Bell Gully Diversion Channel.	At the confluence of Spring Creek and Sam Bell Gully	None	+100	Unincorporated Areas of Montgomery County, City of Oak Ridge North.
	At the confluence of Sam Bell Gully Tributary Diversion Channel and Spring Creek.	None	+117	
	Approximately 1,150 feet upstream from Woodson Road.	None	+136	
Spring Creek, its Tributaries, intermittent Streams and Flooding Effects for areas north of Spring Creek.	At the confluence of West Fork of San Jacinto River and Spring Creek.	None	+67	Unincorporated Areas of Montgomery County, City of Houston.
	At the confluence of Sam Bell Gully Diversion Channel and Spring Creek.	None	+100	
	At the confluence of Mill Creek and Spring Creek	None	+156	
	At the confluence of Walnut Creek and Spring Creek	None	+169	
Stewart Creek Flooding Effects.	Approximately 330 feet upstream of SH 336	None	+148	Unincorporated Areas of Montgomery County, City of Conroe, City of Panorama Village.
	At the confluence of Stewarts Creek Tributary No. 1 and Stewarts Creek.	None	+208	
	Approximately 4,000 feet upstream of FM 830 County Highway.	None	+292	
Sulphur Branch Flooding Effects.	At the confluence of Walnut Creek and Sulfer Branch	None	+178	Unincorporated Areas of Montgomery County, City of Stagecoach, Town of Magnolia.
	Just upstream of Greek Oak Road	None	+218	
	Approximately 75 feet downstream from Magnolia Conroe Street.	None	+273	
Threemile Creek Flooding Effects.	At the confluence of Brushy Creek and Threemile Creek.	None	+208	Unincorporated Areas of Montgomery County.
	Approximately 4,300 feet upstream from the confluence of Brushy Creek and Threemile Creek.	None	+211	
Walnut Creek Flooding Effects.	At the confluence of Spring Creek and Walnut Creek	None	+168	Unincorporated Areas of Montgomery County, City of Stagecoach.
	At the confluence of Mink Branch and Walnut Creek	None	+189	
	At the confluence of Log Gully and Walnut Creek	None	+195	
	Approximately 3,200 feet upstream from unnamed Tributary.	None	+223	
West Fork of Spring Branch Flooding Effects.	At the confluence of Spring Branch and West Fork of Spring Branch.	None	+129	Unincorporated Areas of Montgomery County.

Flooding source(s)	Location of referenced elevation **	* Elevation in feet (NGVD) + Elevation in feet (NAVD) # Depth in feet above ground ∧ Elevation in meters (MSL)		Communities affected
		Effective	Modified	
	Approximately 3,300 feet upstream of Pine Road	None	+191	
White Oak Creek Flooding Effects.	Approximately 20,000 feet downstream of unnamed Railroad.	None	+67	Unincorporated Areas of Montgomery County.
	Approximately 5,100 feet downstream of unnamed Railroad.	None	+80	
Woodsons Gully Flooding Effects.	At the confluence of West Fork of San Jancinto River and Woodsons Gully.	None	+78	Unincorporated Areas of Montgomery County.
	Approximately 15,100 feet upstream of Riley Fuzzel Road.	None	+111	

* National Geodetic Vertical Datum.
+ North American Vertical Datum.
# Depth in feet above ground.
∧ Mean Sea Level, rounded to the nearest 0.1 meter.
** BFEs to be changed include the listed downstream and upstream BFEs, and include BFEs located on the stream reach between the referenced locations above. Please refer to the revised Flood Insurance Rate Map located at the community map repository (see below) for exact locations of all BFEs to be changed.

Send comments to William R. Blanton, Jr., Chief, Engineering Management Branch, Mitigation Directorate, Federal Emergency Management Agency, 500 C Street, SW., Washington, DC 20472.

ADDRESSES

City of Conroe
Maps are available for inspection at 505 West Davis, Conroe, TX 77301.

City of Cut 'N Shoot
Maps are available for inspection at 14391 East Highway 105, Cut 'N Shoot, TX 77303.

City of Houston
Maps are available for inspection at 611 Walker Road, Houston, TX 77002.

City of Oak Ridge North
Maps are available for inspection at 27326 Robinson Road, Suite 115, Conroe, TX 77385.

City of Panorama Village
Maps are available for inspection at 98 Hiwon Drive, Panorama Village, TX 77304.

City of Splendora
Maps are available for inspection at 16940 Main Street, Splendora, TX 77372.

City of Stagecoach
Maps are available for inspection at 16022 Westward Ho, Mongolia Texas, TX 77355.

City of Willis
Maps are available for inspection at P.O. Box 436, Willis, TX 77378.

Town of Magnolia
Maps are available for inspection at 510 Magnolia Blvd, Magnolia, TX 77356.

Town of Shenandoah
Maps are available for inspection at 29811 I–45 North, Shenandoah, TX 77381.

Unincorporated Areas of Montgomery County
Maps are available for inspection at 301 North Thompson, Suite 210, Conroe, TX 77301.

Village of Patton Village
Maps are available for inspection at 16940 Main Street, Splendora, TX 77372.

Village of Woodbranch
Maps are available for inspection at 2626 North Woodloch Drive, Conroe, TX 77385.

Green Lake County, Wisconsin, and Incorporated Areas

Grand River	At Mill Pond Inlet	None	+795	Village of Kingston.
	At Mill Pond Dam	None	+795	
Green Lake	Along the entire Green Lake Shoreline	None	+799	City of Green Lake.

* National Geodetic Vertical Datum.
+ North American Vertical Datum.
# Depth in feet above ground.
∧ Mean Sea Level, rounded to the nearest 0.1 meter.
** BFEs to be changed include the listed downstream and upstream BFEs, and include BFEs located on the stream reach between the referenced locations above. Please refer to the revised Flood Insurance Rate Map located at the community map repository (see below) for exact locations of all BFEs to be changed.

Send comments to William R. Blanton, Jr., Chief, Engineering Management Branch, Mitigation Directorate, Federal Emergency Management Agency, 500 C Street, SW., Washington, DC 20472.

Flooding source(s)	Location of referenced elevation **	* Elevation in feet (NGVD) + Elevation in feet (NAVD) # Depth in feet above ground ∧ Elevation in meters (MSL)		Communities affected
		Effective	Modified	

ADDRESSES

City of Green Lake
Maps are available for inspection at City Hall, 534 Mill Street, Green Lake, WI 54941.

Village of Kingston
Maps are available for inspection at Village Hall, 105 West Ann Street, Kingston, WI 53939.

Outagamie County, Wisconsin, and Incorporated Areas

AAL Tributary	At the confluence with Apple Creek	None	+742	City of Appleton.
	Approximately 410 feet upstream of North Lightning Drive.	None	+746	
Apple Creek	Approximately 0.92 miles upstream of Garrity Road	None	+646	City of Appleton, Unincorporated Areas of Outagamie County, Village of Little Chute.
	Approximately 0.33 miles upstream of U.S. Highway 41.	None	+774	
Apple Creek North	At the confluence with Apple Creek	None	+729	City of Appleton, Unincorporated Areas of Outagamie County.
	Approximately 90 feet upstream of County Highway E	None	+780	
Apple Creek North Overland Flow.	At the confluence with Apple Creek Northeast	None	+737	City of Appleton, Unincorporated Areas of Outagamie County.
	At the divergence from Apple Creek North	None	+744	
Apple Creek Northeast	At the confluence with Apple Creek	None	+721	City of Appleton, Unincorporated Areas of Outagamie County.
	Approximately 0.35 miles upstream of Lanser Lane	None	+761	
Apple Creek Overland Flow	At the confluence with Apple Creek	None	+757	City of Appleton.
	Approximately 0.23 miles above the confluence with Apple Creek.	None	+767	
County Highway JJ Swale	At the confluence with Apple Creek	None	+729	Unincorporated Areas of Outagamie County.
	Approximately 920 feet upstream of the confluence with Apple Creek.	None	+730	
Fox River	Approximately 0.56 miles upstream of State Highway 441.	+704	+703	City of Appleton, Unincorporated Areas of Outagamie County.
	Approximately 200 feet downstream of Appleton Upper Dam.	+725	+728	
Fox River	Approximately 0.27 miles downstream of Rapids Croche Dam.	None	+603	Unincorporated Areas of Outagamie County.
	Approximately 0.87 miles downstream of Thilmany Dam.	None	+610	
French Road Overland Flow	At the confluence with French Road Swale	None	+738	City of Appleton.
	Approximately 960 feet above the confluence with French Road Swale.	None	+743	
French Road Swale	At the confluence with Apple Creek	None	+733	City of Appleton.
	At the divergence from Apple Creek North	None	+747	
Garners Creek	At the confluence with Fox River	+662	+660	City of Appleton, Unincorporated Areas of Outagamie County, Village of Combined Locks, Village of Kimberly, Village of Little Chute.
	Approximately 0.28 miles upstream of Stoney Brook Road.	None	+773	
Garners Creek Tributary 1	At the confluence with Garners Creek	None	+666	Village of Combined Locks, Unincorporated Areas of Outagamie County.
	Approximately 1.28 miles upstream from Block Road	None	+747	
Garners Creek Tributary 2	At the confluence with Garners Creek	None	+698	Unincorporated Areas of Outagamie County.
	Approximately 30 feet upstream of Greenspire Way	None	+748	

Flooding source(s)	Location of referenced elevation**	* Elevation in feet (NGVD) + Elevation in feet (NAVD) # Depth in feet above ground ∧ Elevation in meters (MSL)		Communities affected
		Effective	Modified	
Garners Creek Tributary 3	At the confluence with Garners Creek	None	+711	Unincorporated Areas of Outagamie County.
	Approximately 401 feet upstream of Fenceline Drive	None	+757	
Garners Creek Tributary 3.1	At the confluence with Garners Creek Tributary 3	None	+733	Unincorporated Areas of Outagamie County.
	Approximately 0.20 miles from the confluence with Garners Creek Tributary 3.	None	+740	
Garners Creek Tributary 4	Approximately 50 feet downstream of State Highway 441.	None	+753	City of Appleton, Unincorporated Areas of Outagamie County.
	At the confluence with Garners Creek	None	+753	
Glory Lane Swale	At the confluence with Apple Creek	None	+733	City of Appleton.
	Approximately 120 feet south of Glory Lane	None	+734	
Mud Creek	Approximately 1.33 miles downstream of West Spencer Street.	+745	+744	Unincorporated Areas of Outagamie County.
	Approximately 170 feet downstream of North Mayflower Drive.	None	+837	
Mud Creek Tributary 3.2	At the confluence with Mud Creek Tributary 3	None	+774	Unincorporated Areas of Outagamie County.
	Approximately 0.51 miles upstream of Elsner Road	None	+805	
Mud Creek Tributary 3.3	At the confluence with Mud Creek Tributary 3	None	+774	Unincorporated Areas of Outagamie County.
	Approximately 500 feet upstream of State Highway 15	None	+846	
Mud Creek Tributary 3.3.2	At the confluence with Mud Creek Tributary 3.3	None	+791	Unincorporated Areas of Outagamie County.
	Approximately 100 feet downstream of County Highway JJ.	None	+800	
Mud Creek Tributary 3.3.3	Approximately 370 feet downstream of Barley Way	None	+797	Unincorporated Areas of Outagamie County.
	Approximately 150 feet downstream of County Highway JJ.	None	+800	
Wolf River	Approximately 1.13 miles downstream of U.S. Highway 45.	+760	+761	City of New London.
	Approximately 1.19 miles downstream of U.S. Highway 45.	+760	+761	

* National Geodetic Vertical Datum.
+ North American Vertical Datum.
# Depth in feet above ground.
∧ Mean Sea Level, rounded to the nearest 0.1 meter.
** BFEs to be changed include the listed downstream and upstream BFEs, and include BFEs located on the stream reach between the referenced locations above. Please refer to the revised Flood Insurance Rate Map located at the community map repository (see below) for exact locations of all BFEs to be changed.

Send comments to William R. Blanton, Jr., Chief, Engineering Management Branch, Mitigation Directorate, Federal Emergency Management Agency, 500 C Street, SW., Washington, DC 20472.

ADDRESSES

City of Appleton
Maps are available for inspection at 100 North Appleton Street, Appleton, WI 54911–4799.

City of New London
Maps are available for inspection at 405 West Wolf River Avenue, New London, WI 54961.

Unincorporated Areas of Outagamie County
Maps are available for inspection at 410 South Walnut Street, Appleton, WI 54911.

Village of Combined Locks
Maps are available for inspection at 405 Wallace Street, Combined Locks, WI 54113.

Village of Kimberly
Maps are available for inspection at 515 West Kimberly Avenue, Kimberly, WI 54136.

Village of Little Chute
Maps are available for inspection at 108 West Main Street, Little Chute, WI 54140.

(Catalog of Federal Domestic Assistance No. 97.022, ''Flood Insurance.'')

Dated: March 16, 2009.

Michael K. Buckley,

Acting Assistant Administrator, Mitigation Directorate, Department of Homeland Security, Federal Emergency Management Agency.

[FR Doc. E9–6669 Filed 3–24–09; 8:45 am]

BILLING CODE 9110–12–P

DEPARTMENT OF HOMELAND SECURITY

Federal Emergency Management Agency

44 CFR Part 67

[Docket ID FEMA–2008–0020; Internal Agency Docket No. FEMA–B–1034]

Proposed Flood Elevation Determinations

AGENCY: Federal Emergency Management Agency, DHS.

ACTION: Proposed rule.

SUMMARY: Comments are requested on the proposed Base (1 percent annual-chance) Flood Elevations (BFEs) and proposed BFE modifications for the communities listed in the table below. The purpose of this notice is to seek general information and comment regarding the proposed regulatory flood elevations for the reach described by the downstream and upstream locations in the table below. The BFEs and modified BFEs are a part of the floodplain management measures that the community is required either to adopt or show evidence of having in effect in order to qualify or remain qualified for participation in the National Flood Insurance Program (NFIP). In addition, these elevations, once finalized, will be used by insurance agents, and others to calculate appropriate flood insurance premium rates for new buildings and the contents in those buildings.

DATES: Comments are to be submitted on or before June 23, 2009.

ADDRESSES: The corresponding preliminary Flood Insurance Rate Map (FIRM) for the proposed BFEs for each community are available for inspection at the community's map repository. The respective addresses are listed in the table below.

You may submit comments, identified by Docket No. FEMA–B–1034, to William R. Blanton, Jr., Chief, Engineering Management Branch, Mitigation Directorate, Federal Emergency Management Agency, 500 C Street SW., Washington, DC 20472, (202) 646–3151, or (e-mail) *bill.blanton@dhs.gov.*

FOR FURTHER INFORMATION CONTACT: William R. Blanton, Jr., Chief, Engineering Management Branch, Mitigation Directorate, Federal Emergency Management Agency, 500 C Street SW., Washington, DC 20472, (202) 646–3151 or (e-mail) *bill.blanton@dhs.gov.*

SUPPLEMENTARY INFORMATION: The Federal Emergency Management Agency (FEMA) proposes to make determinations of BFEs and modified BFEs for each community listed below, in accordance with section 110 of the Flood Disaster Protection Act of 1973, 42 U.S.C. 4104, and 44 CFR 67.4(a).

These proposed BFEs and modified BFEs, together with the floodplain management criteria required by 44 CFR 60.3, are the minimum that are required. They should not be construed to mean that the community must change any existing ordinances that are more stringent in their floodplain management requirements. The community may at any time enact stricter requirements of its own, or pursuant to policies established by other Federal, State, or regional entities. These proposed elevations are used to meet the floodplain management requirements of the NFIP and are also used to calculate the appropriate flood insurance premium rates for new buildings built after these elevations are made final, and for the contents in these buildings.

Comments on any aspect of the Flood Insurance Study and FIRM, other than the proposed BFEs, will be considered. A letter acknowledging receipt of any comments will not be sent.

National Environmental Policy Act. This proposed rule is categorically excluded from the requirements of 44 CFR part 10, Environmental Consideration. An environmental impact assessment has not been prepared.

Regulatory Flexibility Act. As flood elevation determinations are not within the scope of the Regulatory Flexibility Act, 5 U.S.C. 601–612, a regulatory flexibility analysis is not required.

Executive Order 12866, Regulatory Planning and Review. This proposed rule is not a significant regulatory action under the criteria of section 3(f) of Executive Order 12866, as amended.

Executive Order 13132, Federalism. This proposed rule involves no policies that have federalism implications under Executive Order 13132.

Executive Order 12988, Civil Justice Reform. This proposed rule meets the applicable standards of Executive Order 12988.

List of Subjects in 44 CFR Part 67

Administrative practice and procedure, Flood insurance, Reporting and recordkeeping requirements.

Accordingly, 44 CFR part 67 is proposed to be amended as follows:

PART 67—[AMENDED]

1. The authority citation for part 67 continues to read as follows:

Authority: 42 U.S.C. 4001 *et seq.*; Reorganization Plan No. 3 of 1978, 3 CFR, 1978 Comp., p. 329; E.O. 12127, 44 FR 19367, 3 CFR, 1979 Comp., p. 376.

§ 67.4 [Amended]

2. The tables published under the authority of § 67.4 are proposed to be amended as follows:

State	City/town/county	Source of flooding	Location**	* Elevation in feet (NGVD) + Elevation in feet (NAVD) # Depth in feet above ground ∧ Elevation in meters (MSL)	
				Existing	Modified
Village of Dansville, New York					
New York	Village of Dansville	Canaseraga Creek	In the northern annexation, west of State Route 63, east of the railroad, and approximately 2800 feet north of Zerfass Road..	None	*607
			In the northern annexation, just east of the railroad, approximately 1500 feet north of Zerfass Road along the railroad..	None	*610

* National Geodetic Vertical Datum.
\+ North American Vertical Datum.
\# Depth in feet above ground.
∧ Mean Sea Level, rounded to the nearest 0.1 meter.
** BFEs to be changed include the listed downstream and upstream BFEs, and include BFEs located on the stream reach between the referenced locations above. Please refer to the revised Flood Insurance Rate Map located at the community map repository (see below) for exact locations of all BFEs to be changed.

Send comments to William R. Blanton, Jr., Chief, Engineering Management Branch, Mitigation Directorate, Federal Emergency Management Agency, 500 C Street, SW., Washington, DC 20472.

ADDRESSES

Village of Dansville
Maps are available for inspection at 14 Clara Barton Street, Village of Dansville, NY 14437.

Flooding source(s)	Location of referenced elevation**	* Elevation in feet (NGVD) + Elevation in feet (NAVD) # Depth in feet above ground		Communities affected
		Effective	Modified	
Ralls County, Missouri, and Incorporated Areas				
Bear Creek	Lilly Avenue	None	+499	Unincorporated Areas of Ralls County.
	Hydesburg Road	None	+562	
Mississippi River	Divergence of Gilberts Chute	None	+471	Unincorporated Areas of Ralls County.
	Confluence of Marble Creek	None	+475	

* National Geodetic Vertical Datum.
\+ North American Vertical Datum.
\# Depth in feet above ground.
** BFEs to be changed include the listed downstream and upstream BFEs, and include BFEs located on the stream reach between the referenced locations above. Please refer to the revised Flood Insurance Rate Map located at the community map repository (see below) for exact locations of all BFEs to be changed.

Send comments to William R. Blanton, Jr., Chief, Engineering Management Branch, Mitigation Directorate, Federal Emergency Management Agency, 500 C Street, SW., Washington, DC 20472.

ADDRESSES

Unincorporated Areas of Ralls County
Maps are available for inspection at 311 South Main Street, New London, MO 63459.

Pittsburg County, Oklahoma, and Incorporated Areas				
Tributary AA	Approximately 2790 feet downstream of 14th Street.	+707	+715	City of Mcalester.
	Approximately 2160 feet downstream of 14th Street.	+720	+724	
Tributary B	Approximately 470 feet downstream of C Street.	+689	+686	Unincorporated Areas of Pittsburg County, City of McAlester.
	Approximately 1700 feet upstream of Swallow Drive.	+732	+728	
Tributary E	Approximately 1200 feet upstream of Highway 270.	None	+654	Unincorporated Areas of Pittsburg County.

Flooding source(s)	Location of referenced elevation**	* Elevation in feet (NGVD) + Elevation in feet (NAVD) # Depth in feet above ground		Communities affected
		Effective	Modified	
	Approximately 5000 feet upstream of Highway 270.	None	+658	

* National Geodetic Vertical Datum.
+ North American Vertical Datum.
# Depth in feet above ground.
^ Mean Sea Level, rounded to the nearest 0.1 meter.
** BFEs to be changed include the listed downstream and upstream BFEs, and include BFEs located on the stream reach between the referenced locations above. Please refer to the revised Flood Insurance Rate Map located at the community map repository (see below) for exact locations of all BFEs to be changed.

Send comments to William R. Blanton, Jr., Chief, Engineering Management Branch, Mitigation Directorate, Federal Emergency Management Agency, 500 C Street, SW., Washington, DC 20472.

ADDRESSES

City of McAlester

Maps are available for inspection at 28 East Washington Street, McAlester, OK 74502.

Unincorporated Areas of Pittsburg County

Maps are available for inspection at 115 East Carl Albert Parkway, McAlester, OK 74501.

Bowie County, Texas, and Incorporated Areas

Days Creek	Approximately 4910 feet downstream of Loop 151.	None	+255	Unincorporated Areas of Bowie County.
	Approximately 1480 feet upstream of Lubbock Street.	None	+273	
No Name Creek	Approximately 1015 feet upstream of Lakeridge Drive.	None	+281	Unincorporated Areas of Bowie County.
	Approximately 1273 feet downstream of Lakeridge Drive.	None	+290	
Un-Named Tributary of Days Creek	Confluence of Un-Named Tributary and Days Creek.	None	+259	Unincorporated Areas of Bowie County.
	Approximately 2663 feet upstream of confluence of Days Creek.	None	+261	

* National Geodetic Vertical Datum.
+ North American Vertical Datum.
# Depth in feet above ground.
** BFEs to be changed include the listed downstream and upstream BFEs, and include BFEs located on the stream reach between the referenced locations above. Please refer to the revised Flood Insurance Rate Map located at the community map repository (see below) for exact locations of all BFEs to be changed.

Send comments to William R. Blanton, Jr., Chief, Engineering Management Branch, Mitigation Directorate, Federal Emergency Management Agency, 500 C Street, SW., Washington, DC 20472.

ADDRESSES

Unincorporated Areas of Bowie County

Maps are available for inspection at Courthouse, 710 James Bowie Drive, New Boston, TX 75570.

(Catalog of Federal Domestic Assistance No. 97.022, ''Flood Insurance.'')

Dated: January 22, 2009.

Michael K. Buckley,

Acting Assistant Administrator, Mitigation Directorate, Department of Homeland Security, Federal Emergency Management Agency.

[FR Doc. E9–6645 Filed 3–24–09; 8:45 am]

BILLING CODE 9110–12–P

DEPARTMENT OF HOMELAND SECURITY

Federal Emergency Management Agency

44 CFR Part 67

[Docket ID FEMA–2008–0020; Internal Agency Docket No. FEMA–B–1031]

Proposed Flood Elevation Determinations

AGENCY: Federal Emergency Management Agency, DHS.

ACTION: Proposed rule.

SUMMARY: Comments are requested on the proposed Base (1 percent annual-chance) Flood Elevations (BFEs) and proposed BFE modifications for the communities listed in the table below. The purpose of this notice is to seek general information and comment regarding the proposed regulatory flood elevations for the reach described by the downstream and upstream locations in the table below. The BFEs and modified BFEs are a part of the floodplain management measures that the community is required either to adopt or show evidence of having in effect in order to qualify or remain qualified for participation in the National Flood Insurance Program (NFIP). In addition, these elevations, once finalized, will be used by insurance agents, and others to calculate appropriate flood insurance

premium rates for new buildings and the contents in those buildings.

DATES: Comments are to be submitted on or before June 23, 2009.

ADDRESSES: The corresponding preliminary Flood Insurance Rate Map (FIRM) for the proposed BFEs for each community are available for inspection at the community's map repository. The respective addresses are listed in the table below.

You may submit comments, identified by Docket No. FEMA–B–1031, to William R. Blanton, Jr., Chief, Engineering Management Branch, Mitigation Directorate, Federal Emergency Management Agency, 500 C Street SW., Washington, DC 20472, (202) 646–3151, or (e-mail) *bill.blanton@dhs.gov.*

FOR FURTHER INFORMATION CONTACT: William R. Blanton, Jr., Chief, Engineering Management Branch, Mitigation Directorate, Federal Emergency Management Agency, 500 C Street SW., Washington, DC 20472, (202) 646–3151 or (e-mail) *bill.blanton@dhs.gov*.

SUPPLEMENTARY INFORMATION: The Federal Emergency Management Agency (FEMA) proposes to make determinations of BFEs and modified BFEs for each community listed below, in accordance with section 110 of the Flood Disaster Protection Act of 1973, 42 U.S.C. 4104, and 44 CFR 67.4(a).

These proposed BFEs and modified BFEs, together with the floodplain management criteria required by 44 CFR 60.3, are the minimum that are required. They should not be construed to mean that the community must change any existing ordinances that are more stringent in their floodplain management requirements. The community may at any time enact stricter requirements of its own, or pursuant to policies established by other Federal, State, or regional entities. These proposed elevations are used to meet the floodplain management requirements of the NFIP and are also used to calculate the appropriate flood insurance premium rates for new buildings built after these elevations are made final, and for the contents in these buildings.

Comments on any aspect of the Flood Insurance Study and FIRM, other than the proposed BFEs, will be considered. A letter acknowledging receipt of any comments will not be sent.

National Environmental Policy Act. This proposed rule is categorically excluded from the requirements of 44 CFR part 10, Environmental Consideration. An environmental impact assessment has not been prepared.

Regulatory Flexibility Act. As flood elevation determinations are not within the scope of the Regulatory Flexibility Act, 5 U.S.C. 601–612, a regulatory flexibility analysis is not required.

Executive Order 12866, Regulatory Planning and Review. This proposed rule is not a significant regulatory action under the criteria of section 3(f) of Executive Order 12866, as amended.

Executive Order 13132, Federalism. This proposed rule involves no policies that have federalism implications under Executive Order 13132.

Executive Order 12988, Civil Justice Reform. This proposed rule meets the applicable standards of Executive Order 12988.

List of Subjects in 44 CFR Part 67

Administrative practice and procedure, Flood insurance, Reporting and recordkeeping requirements.

Accordingly, 44 CFR part 67 is proposed to be amended as follows:

PART 67—[AMENDED]

1. The authority citation for part 67 continues to read as follows:

Authority: 42 U.S.C. 4001 *et seq.*; Reorganization Plan No. 3 of 1978, 3 CFR, 1978 Comp., p. 329; E.O. 12127, 44 FR 19367, 3 CFR, 1979 Comp., p. 376.

§ 67.4 [Amended]

2. The tables published under the authority of § 67.4 are proposed to be amended as follows:

Flooding source(s)	Location of referenced elevation **	* Elevation in feet (NGVD) + Elevation in feet (NAVD) # Depth in feet above ground		Communities affected
		Effective	Modified	
Audrain County, Missouri, and Incorporated Areas				
Davis Creek	Just downstream of County Highway 15/Paris Road	None	+735	Unincorporated Areas of Audrain County.
	At Kentucky Road	None	+739	
South Fork Salt River	At County Highway J	None	+735	Unincorporated Areas of Audrain County.

* National Geodetic Vertical Datum.

\+ North American Vertical Datum.

\# Depth in feet above ground.

** BFEs to be changed include the listed downstream and upstream BFEs, and include BFEs located on the stream reach between the referenced locations above. Please refer to the revised Flood Insurance Rate Map located at the community map repository (see below) for exact locations of all BFEs to be changed.

Send comments to William R. Blanton, Jr., Chief, Engineering Management Branch, Mitigation Directorate, Federal Emergency Management Agency, 500 C Street, SW., Washington, DC 20472.

ADDRESSES

Unincorporated Areas of Audrain County

Maps are available for inspection at County Courthouse, 101 North Jefferson Street, Mexico, MO 65265.

Camden County, Missouri, and Incorporated Areas				
Grand Glaize River	At Highway 54	None	+664	Unincorporated Areas of Camden County, City of Osage Beach.
	Approximately 10.5 miles upstream of Highway 54	None	+665	

Flooding source(s)	Location of referenced elevation**	* Elevation in feet (NGVD) + Elevation in feet (NAVD) # Depth in feet above ground		Communities affected
		Effective	Modified	
Linn Creek	At confluence with Osage River	None	+664	Unincorporated Areas of Camden County, City of Linn Creek.
	At confluence with Linn Creek North Fork	None	+674	
Linn Creek North Fork	At confluence with Linn Creek	None	+674	Unincorporated Areas of Camden County, City of Linn Creek.
	Approximately 0.9 miles upstream of confluence with Linn Creek.	None	+693	
Linn Creek South Fork	At Locust Street	None	+695	Unincorporated Areas of Camden County, City of Linn Creek.
	At Highway 54	None	+710	
Little Niangua River	At confluence with Niangua River	None	+664	Unincorporated Areas of Camden County.
	At Highway J	None	+673	
Niangua River	At Highway 5	None	+664	Unincorporated Areas of Camden County.
	At Tunnel Dam	None	+732	
Osage River	At Highway MM	None	+664	Unincorporated Areas of Camden County, City of Osage Beach, City of Sunrise Beach, Village of Four Seasons.
	At Highway 5	None	+664	
	Approximately 36 miles upstream of Highway 5	None	+666	

* National Geodetic Vertical Datum.
+ North American Vertical Datum.
# Depth in feet above ground.

** BFEs to be changed include the listed downstream and upstream BFEs, and include BFEs located on the stream reach between the referenced locations above. Please refer to the revised Flood Insurance Rate Map located at the community map repository (see below) for exact locations of all BFEs to be changed.

Send comments to William R. Blanton, Jr., Chief, Engineering Management Branch, Mitigation Directorate, Federal Emergency Management Agency, 500 C Street, SW., Washington, DC 20472.

ADDRESSES

City of Linn Creek
Maps are available for inspection at City Hall, 102 E Valley Drive, Linn Creek, MO 65052.

City of Osage Beach
Maps are available for inspection at City Hall, 1000 City Parkway, Osage Beach, MO 65065.

City of Sunrise Beach
Maps are available for inspection at Camden County Courthouse, 1 Court Circle, Camdenton, MO 65020.

Unincorporated Areas of Camden County
Maps are available for inspection at Camden County Courthouse, 1 Court Circle, Camdenton, MO 65020.

Village of Four Seasons
Maps are available for inspection at City Hall, 133 Cherokee Road, Four Seasons, MO 65049.

Greene County, Missouri, and Incorporated Areas

Galloway Creek	US Highway 60 Access Ramp	+1,155	+1154	City of Springfield.
	East Seminole Street	None	+1,301	
Jordan Creek	West Bennett Street	+1,222	+1,223	City of Springfield.
	North Washington Avenue	+1,274	+1,277	
North Branch Jordan Creek	East Brower Street	+1,282	+1,281	City of Springfield.
	North Freemont Avenue	+1,311	+1,312	
	North Yates Avenue	None	+1,356	
South Branch Jordan Creek	North Sherman Avenue	+1,276	+1,283	City of Springfield.
	North Patterson Avenue	+1,329	+1,330	
South Creek	US Highway 160/County Highway FF	+1,159	+1,162	City of Springfield, Unincorporated Areas of Greene County.
	South Golden Avenue	+1,209	+1,210	
	South Kickapoo Avenue	+1,305	+1,307	
Ward Branch	South Farm Road 139/County Road 139	+1,113	+1,114	City of Springfield, Unincorporated Areas of Greene County.
	East Republic Street	+1,218	+1,217	
	East Independence Street	None	+1,251	

Flooding source(s)	Location of referenced elevation **	* Elevation in feet (NGVD) + Elevation in feet (NAVD) # Depth in feet above ground		Communities affected
		Effective	Modified	
Yarbrough Creek	West Lakewood Street	None	+1,187	City of Springfield, Unincorporated Areas of Greene County.
	East Buena Vista Street	+1,208	+1,207	
	Just upstream (west of) and adjacent to South Campbell Avenue/Highway 100.	+1,233	+1,212	

* National Geodetic Vertical Datum.
+ North American Vertical Datum.
# Depth in feet above ground.
** BFEs to be changeinclude the listed downstream and upstream BFEs, and include BFEs located on the stream reach between the referenced locations above. Please refer to the revised Flood Insurance Rate Map located at the community map repository (see below) for exact locations of all BFEs to be changed.

Send comments to William R. Blanton, Jr., Chief, Engineering Management Branch, Mitigation Directorate, Federal Emergency Management Agency, 500 C Street SW., Washington, DC 20472.

ADDRESSES

City of Springfield

Maps are available for inspection at 840 Boonville Avenue, Springfield, MO 65801.

Unincorporated Areas of Greene County

Maps are available for inspection at 940 Boonville Street, Springfield, MO 65802.

Platte County, Nebraska, and Incorporated Areas

Loup River	Approximately 1.4 miles upstream of the confluence with Platte River.	None	+1,432	City of Columbus.
	United States Highway 81	None	+1,447	
Platte River	At the Platte/Colfax county boundary	None	+1,411	City of Columbus, Unincorporated Areas of Platte County.
	Approximately 4.1 miles upstream of the Platte/Colfax county boundary.	None	+1,430	

* National Geodetic Vertical Datum.
+ North American Vertical Datum.
# Depth in feet above ground.
** BFEs to be changeinclude the listed downstream and upstream BFEs, and include BFEs located on the stream reach between the referenced locations above. Please refer to the revised Flood Insurance Rate Map located at the community map repository (see below) for exact locations of all BFEs to be changed.

Send comments to William R. Blanton, Jr., Chief, Engineering Management Branch, Mitigation Directorate, Federal Emergency Management Agency, 500 C Street SW., Washington, DC 20472.

ADDRESSES

City of Columbus

Maps are available for inspection at City Hall, 2424 14th Street, Columbus, NE 68602.

Unincorporated Areas of Platte County

Maps are available for inspection at Courthouse, 2610 14th Street, Columbus, NE 68601.

Lancaster County, Nebraska, and Incorporated Areas

Beal Slough	Approximately 463 feet downstream of South 70th Street.	None	+1,295	City of Lincoln.
	Approximately 170 feet upstream of South 84th Street	None	+1,376	
Cardwell Branch	Approximately 3,700 feet upstream of SW 27th Street	None	+1,209	City of Lincoln.
	Approximately 2,670 feet upstream of SW 40th Street	None	+1,221	
Cardwell Branch Tributary	Approximately 84 feet upstream of West Cardwell Road.	None	+1,203	City of Lincoln., Unincorporated Areas of Lancaster County.
	Approximately 1,890 feet upstream of Saltillo Road	None	+1,313	
Colonial Heights Tributary	At the confluence with Beal Slough	None	+1,230	City of Lincoln.
	Approximately 2,050 feet upstream of the confluence with Beal Slough.	None	+1,245	
End Run	At the confluence with Ash Hollow Ditch	None	+1,119	City of Waverly.
	Approximately 1,062 feet upstream of Amberly Road	None	+1,130	
Little Salt Creek	Approximately 1,040 feet upstream of the confluence with Salt Creek.	None	+1,139	City of Lincoln.
	Approximately 656 feet upstream of Arbor Road	None	+1,139	
Northeast Tributary to Southeast Upper Salt Creek.	At the confluence with Southeast Upper Salt Creek	None	+1,231	City of Lincoln.
	Approximately 559 feet upstream of Rebel Drive	None	+1,294	

Flooding source(s)	Location of referenced elevation **	* Elevation in feet (NGVD) + Elevation in feet (NAVD) # Depth in feet above ground		Communities affected
		Effective	Modified	
Pine Lake Tributary	At the confluence with Beal Slough	None	+1,276	City of Lincoln.
	Approximately 822 feet upstream of Ashbrook Drive	None	+1,313	
Salt Creek	Approximately 5,010 feet upstream of Warlick Boulevard.	None	+1,175	City of Lincoln.
	Approximately 3,709 feet upstream of Saltillo Road	None	+1,199	
South Branch	At the confluence with Beal Slough	None	+1,299	City of Lincoln.
	Approximately 3,900 feet upstream of Yankee Hill Road.	None	+1,332	
South Tributary to Southeast Upper Salt Creek.	At the confluence with Southeast Upper Salt Creek	None	+1,195	City of Lincoln.
	Approximately 4,278 feet upstream of South 38th Street.	None	+1,257	
Southeast Upper Salt Creek Tributary to Salt Creek.	Confluence with Salt Creek	None	+1,192	City of Lincoln.
	Approximately 785 feet upstream of South 66th Street	None	+1,321	
Stevens Creek	Approximately 1,400 feet downstream of Yankee Hill Road.	None	+1,289	City of Lincoln.
	Approximately 1,313 feet upstream of State Highway 2.	None	+1,363	
Stevens Creek Tributary 105	At the confluence with Stevens Creek Tributary 5	None	+1,140	City of Lincoln.
	Approximately 2,445 feet upstream of Havelock Road	None	+1,191	
Stevens Creek Tributary 110	At the confluence with Stevens Creek Tributary 10	None	+1,162	City of Lincoln.
	Approximately 362 feet upstream of Leighton Avenue	None	+1,192	
Stevens Creek Tributary 1,150.	At the confluence with Stevens Creek Tributary 150	None	+1,219	City of Lincoln.
	Approximately 2,875 feet upstream of the onfluence with Stevens Creek Tributary 150.	None	+1,246	
Stevens Creek Tributary 1270.	Approximately 2,879 feet upstream of County Road	None	+1,237	Unincorporated Areas of Lancaster County.
	Approximately 2,879 feet upstream of County Road	None	+1,304	
Stevens Creek Tributary 130	At the confluence with Stevens Creek Tributary 30	None	+1,201	City of Lincoln.
	Approximately 1,025 feet upstream of North 98th Street.	None	+1,213	
Stevens Creek Tributary 135	At the confluence with Stevens Creek Tributary 35	None	+1,176	City of Lincoln.
	Approximately 3,325 feet upstream of the confluence with Stevens Creek Tributary 35.	None	+1,220	
Stevens Creek Tributary 145	At the confluence with Stevens Creek Tributary 45	None	+1,188	City of Lincoln.
	Approximately 2,050 feet upstream of the confluence with Stevens Creek Tributary 45.	None	+1,207	
Stevens Creek Tributary 15	At the confluence with Stevens Creek	None	+1,152	City of Lincoln.
	Approximately 3,155 feet upstream of North 102nd Street.	None	+1,183	
Stevens Creek Tributary 150	At the confluence with Stevens Creek Tributary 50	None	+1,190	Unincorporated Areas of Lancaster County.
	Approximately 1.4 miles upstream of the confluence with Stevens Creek Tributary 2150.	None	+1,293	
Stevens Creek Tributary 160	At the confluence with Stevens Creek Tributary 60	None	+1,224	City of Lincoln.
	Approximately 1,686 feet upstream of South 112th Street.	None	+1,286	
Stevens Creek Tributary 170	At the confluence with Stevens Creek Tributary 70	None	+1,217	Unincorporated Areas of Lancaster County.
	Approximately 1,221 feet upstream of Van Dorn Street.	None	+1,239	
Stevens Creek Tributary 185	At the confluence with Stevens Creek Tributary 85	None	+1,252	Unincorporated Areas of Lancaster County.
	Approximately 3,100 feet upstrea of the confluence with Stevens Creek Tributary 85.	None	+1,282	
Stevens Creek Tributary 196	At the confluence with Stevens Creek Tributary 96	None	+1,278	City of Lincoln.
	Approximately 4,350 feet upstream of the confluence with Stevens Creek Tributary 96.	None	+1,324	
Stevens Creek Tributary 20	At the confluence with Stevens Creek	None	+1,156	City of Lincoln.
	Approximately 4,300 feet upstream of North 112th Street.	None	+1,216	
Stevens Creek Tributary 2150.	At the confluence with Stevens Creek Tributary 150	None	+1,246	Unincorporated Areas of Lancaster County.
	Approximately 2,625 feet upstream of O Street	None	+1,307	
Stevens Creek Tributary 2270.	At the confluence with Stevens Creek Tributary 270	None	+1,263	Unincorporated Areas of Lancaster County.

Flooding source(s)	Location of referenced elevation **	* Elevation in feet (NGVD) + Elevation in feet (NAVD) # Depth in feet above ground		Communities affected
		Effective	Modified	
	Approximately 3,500 feet upstream of the confluence with Stevens Creek Tributary 270.	None	+1,297	
Stevens Creek Tributary 245	At the confluence with Stevens Creek Tributary	None	+1,205	City of Lincoln.
	Approximately 1,486 feet upstream of South 112th Street.	None	+1,224	
Stevens Creek Tributary 25 ..	At the confluence with Stevens Creek	None	+1165	City of Lincoln.
	Approximately 2,947 feet upstream of South 112th Street.	None	+1,207	
Stevens Creek Tributary 250	At the confluence with Stevens Creek Tributary 50	None	+1,202	City of Lincoln.
	Approximately 2,077 feet upstream of Holdrege Street	None	+1,272	
Stevens Creek Tributary 260	At the confluence with Stevens Creek Tributary 60	None	+1,241	City of Lincoln.
	Approximately 218 feet upstream of Old Cheney Road.	None	+1,288	
Stevens Creek Tributary 270	At the confluence with Stevens Creek Tributary 70	None	+1,233	Unincorporated Areas of Lancaster County.
	Approximately 4,300 feet upstream of the confluence with Stevens Creek Tributary 2270.	None	+1,302	
Stevens Creek Tributary 296	At the confluence with Stevens Creek Tributary 96	None	+1,323	City of Lincoln.
	Approximately 4,000 feet upstream of the confluence with Stevens Creek Tributary 96.	None	+1,343	
Stevens Creek Tributary 30 ..	Approximately 900 feet upstream of the confluence with Stevens Creek.	None	+1,160	City of Lincoln.
	Approximately 419 feet upstream of Anthony Lane	None	+1,233	
Stevens Creek Tributary 345	At the confluence with Stevens Creek Tributary 45	None	+1,216	City of Lincoln.
	Approximately 2,450 feet upstream of the confluence with Stevens Creek Tributary 45.	None	+1,225	
Stevens Creek Tributary 35 ..	At the confluence with Stevens Creek	None	+1,175	City of Lincoln.
	Approximately 1.0 miles upstream of Holdrege Street	None	+1,249	
Stevens Creek Tributary 350	At the confluence with Stevens Creek Tributary 50	None	+1,251	Unincorporated Areas of Lancaster County.
	Approximately 2,700 feet upstream of the confluence with Stevens Creek Tributary 50.	None	+1,281	
Stevens Creek Tributary 360	At the confluence with Stevens Creek Tributary 60	None	+1,252	City of Lincoln.
	Approximately 1,893 feet upstream of South 112th Stree.	None	+1,297	
Stevens Creek Tributary 396	At the confluence with Stevens Creek Tributary 96	None	+1,337	City of Lincoln.
	Approximately 2,000 feet upstream of the confluence with Stevens Creek Tributary 96.	None	+1,362	
Stevens Creek Tributary 40 ..	At the confluence with Stevens Creek	None	+1,179	City of Lincoln.
	Approximately 1,491 feet upstream of South 112th Street.	None	+1,203	
Stevens Creek Tributary 40A	At the confluence with Stevens Creek Tributary 40	None	+1,178	City of Lincoln.
	Divergence from Stevens Creek Tributary 40	None	+1,185	
Stevens Creek Tributary 445	At the confluence with Stevens Creek Tributary 45	None	+1,220	City of Lincoln.
	Approximately 2,425 feet upstream of 84th Street	None	+1,284	
Stevens Creek Tributary 45 ..	Just upstream of Van Dorn Street	None	+1,247	City of Lincoln.
	Approximately 820 feet upstream of South 98th Street	None	+1,286	
Stevens Creek Tributary 460	At the confluence with Stevens Creek Tributary 60	None	+1,268	City of Lincoln.
	Approximately 1.0 miles upstream of the confluence with Stevens Creek Tributary 60.	None	+1,322	
Stevens Creek Tributary 5	At the confluence with Stevens Creek Main Channel	None	+1,131	City of Lincoln.
	Approximately 1.0 miles upstream of Havelock Avenue.	None	+1,208	
Stevens Creek Tributary 50 ..	At the confluence with Stevens Creek	None	+1,185	City of Lincoln, Unincorporated Areas of Lancaster County.
	Approximately 3,700 feet upstream of Holdrege Street	None	+1,295	
Stevens Creek Tributary 545	At the confluence with Stevens Creek Tributary 45	None	+1,236	City of Lincoln.
	Approximately 3,750 feet upstream of South 98th Street.	None	+1,276	
Stevens Creek Tributary 55 ..	At the confluence with Stevens Creek	None	+1,194	City of Lincoln.
	Approximately 1,825 feet upstream of South 134th Street.	None	+1,234	
Stevens Creek Tributary 60 ..	At the confluence with Stevens Creek	None	+1,196	City of Lincoln.
	Approximately 1.8 miles upstream of Old Cheney Road.	None	+1,321	
Stevens Creek Tributary 65 ..	At the confluence with Stevens Creek	None	+1,204	City of Lincoln.
	Approximately 2,075 feet upstream of South 134th Street.	None	+1,233	
Stevens Creek Tributary 7	At the confluence with Stevens Creek	None	+1,141	City of Lincoln.

Flooding source(s)	Location of referenced elevation **	* Elevation in feet (NGVD) + Elevation in feet (NAVD) # Depth in feet above ground		Communities affected
		Effective	Modified	
	Approximately 1,875 feet upstream of the confluence with Stevens Creek.	None	+1,158	
Stevens Creek Tributary 70 ..	At the confluence with Stevens Creek	None	+1,208	Unincorporated Areas of Lancaster County , City of Lincoln.
	Approximately 1.7 miles upstream of Van Dorn Street	None	+1,300	
Stevens Creek Tributary 75 ..	At the confluence with Stevens Creek	None	+1,217	City of Lincoln, Unincorporated Areas of Lancaster County.
	Approximately 140 feet upstream of Pioneers Boulevard.	None	+1,264	
Stevens Creek Tributary 80 ..	At the confluence with Stevens Creek	None	+1,223	City of Lincoln.
	Approximately 2,750 feet upstream of the confluence with Stevens Creek.	None	+1,261	
Stevens Creek Tributary 85 ..	At the confluence with Stevens Creek	None	+1,226	City of Lincoln, Unincorporated Areas of Lancaster County.
	Approximately 1.0 miles upstream of Old Cheney Road.	None	+1,300	
Stevens Creek Tributary 88 ..	At the confluence with Stevens Creek	None	+1,229	City of Lincoln.
	Approximately 50 feet upstream of Old Cheney Road	None	+1,243	
Stevens Creek Tributary 90 ..	At the confluence with Stevens Creek	None	+1,241	City of Lincoln.
	Approximately 3,550 feet upstream of the confluence with Stevens Creek.	None	+1,277	
Stevens Creek Tributary 92 ..	At the confluence with Stevens Creek	None	+1,245	City of Lincoln.
	Approximately 1,400 feet upstream of Pleasant Hill Road.	None	+1,273	
Stevens Creek Tributary 94 ..	At the confluence with Stevens Creek	None	+1,264	City of Lincoln.
	Approximately 2,000 feet upstream of Yankee Hill Road.	None	+1,318	
Stevens Creek Tributary 96 ..	At the confluence with Stevens Creek	None	+1,272	City of Lincoln.
	Approximately 3,150 feet upstream of Yankee Hill Road.	None	+1,378	
Stevens Creek Tributary 98 ..	At the confluence with Stevens Creek	None	+1,295	City of Lincoln.
	Approximately 3,900 feet upstream of Yankee Hill Road.	None	+1,333	
Stevens Creek Overflow Tributary 5.	At the confluence with Stevens Creek Overflow	None	+1,138	City of Lincoln.
	Approximately 3,500 feet upstream of the confluence with Stevens Creek Overflow.	None	+1,157	
Stevens Creek Tributary 10 ..	At the confluence with Stevens Creek	None	+1,151	City of Lincoln.
	Approximately 2,552 feet upstream of Leighton Avenue.	None	+1,224	
Tierra Branch/Cripple Creek	At the confluence with Beal Slough	None	+1,195	City of Lincoln.
	Approximately 970 feet upstream of Fir Hollow Lane ..	None	+1,272	
Tributary 1 to Southeast Upper Salt Creek.	At the confluence with Southeast Upper Salt Creek ...	None	+1,225	City of Lincoln.
	Approximately 500 feet upstream of South 40th Street	None	+1,235	
Tributary 2 to Southeast Upper Salt Creek.	At the confluence with Southeast Upper Salt Creek ...	None	+1,261	City of Lincoln.
	Approximately 2,180 feet upstream of Newcastle Road.	None	+1,283	
Tributary 3 to Southeast Upper Salt Creek.	At the confluence with Southeast Upper Salt Creek ...	None	+1,290	City of Lincoln.
	Approximately1,530 feet upstream of Rokeby Road ...	None	+1,309	
Tributary 4 to South Tributary to Southeast Upper Salt Creek.	At the confluence with South Tributary to Southeast Upper Salt Creek.	None	+1,199	City of Lincoln.
	Approximately 420 feet upstream of South 38th Street	None	+1,225	
Unnamed Tributary 2	At the confluence with Salt Creek	None	+1,110	City of Waverly.
	Approximately 540 feet upstream of North 148th Street.	None	+1,118	
Wilderness Hills Tributary to Southeast Upper Salt Creek.	At the confluence with Southeast Upper Salt Creek ...	None	+1,208	City of Lincoln.
	Approximately 1,10 feet upstream of the confluence with Southeast Upper Salt Creek.	None	+1,219	
Williamsburg Tributary	At the confluence with Tieraa Branch	None	+1,219	City of Lincoln.

Flooding source(s)	Location of referenced elevation **	* Elevation in feet (NGVD) + Elevation in feet (NAVD) # Depth in feet above ground		Communities affected
		Effective	Modified	
	Approximately 700 feet upstream of Williamsburg Drive.	None	+1,238	

* National Geodetic Vertical Datum.
+ North American Vertical Datum.
# Depth in feet above ground.

** BFEs to be changeinclude the listed downstream and upstream BFEs, and include BFEs located on the stream reach between the referenced locations above. Please refer to the revised Flood Insurance Rate Map located at the community map repository (see below) for exact locations of all BFEs to be changed.

Send comments to William R. Blanton, Jr., Chief, Engineering Management Branch, Mitigation Directorate, Federal Emergency Management Agency, 500 C Street SW., Washington, DC 20472.

ADDRESSES

City of Lincoln
Maps are available for inspection at Building & Safety Department, 555 South 10th Street, Lincoln, NE 68508.
City of Waverly
Maps are available for inspection at City Hall, 14130 Lancashire Street, Waverly, NE 68462.
Unincorporated Areas of Lancaster County
Maps are available for inspection at Building & Safety Department, 555 South 10th Street, Lincoln, NE 68508.

(Catalog of Federal Domestic Assistance No. 97.022, ''Flood Insurance.'')

Dated: January 8, 2009.

Michael K. Buckley,

Acting Assistant Administrator, Mitigation Directorate, Department of Homeland Security, Federal Emergency Management Agency.

[FR Doc. E9–6642 Filed 3–24–09; 8:45 am]

BILLING CODE 9110–12–P

DEPARTMENT OF HOMELAND SECURITY

Federal Emergency Management Agency

44 CFR Part 67

[Docket ID FEMA–2008–0020; Internal Agency Docket No. FEMA–B–1016]

Proposed Flood Elevation Determinations

AGENCY: Federal Emergency Management Agency, DHS.

ACTION: Proposed rule; correction.

SUMMARY: On November 5, 2008, FEMA published in the **Federal Register** a proposed rule that contained an erroneous table. This notice provides corrections to that table, to be used in lieu of the information published at 73 FR 65811. The table provided here represents the flooding source, location of referenced elevation, effective and modified elevation, and communities affected for Kankakee County, Illinois and Incorporated Areas. Specifically, it addresses flooding source South Branch Rock Creek.

FOR FURTHER INFORMATION CONTACT: William R. Blanton, Jr., Chief, Engineering Management Branch, Mitigation Directorate, Federal Emergency Management Agency, 500 C Street, SW., Washington, DC 20472, (202) 646–3151 or (e-mail) *bill.blanton@dhs.gov.*

SUPPLEMENTARY INFORMATION: The Federal Emergency Management Agency (FEMA) publishes proposed determinations of Base (1% annual-chance) Flood Elevations (BFEs) and modified BFEs for communities participating in the National Flood Insurance Program (NFIP), in accordance with section 110 of the Flood Disaster Protection Act of 1973, 42 U.S.C. 4104, and 44 CFR 67.4(a).

These proposed BFEs and modified BFEs, together with the floodplain management criteria required by 44 CFR 60.3, are the minimum that are required. They should not be construed to mean that the community must change any existing ordinances that are more stringent in their floodplain management requirements. The community may at any time enact stricter requirements of its own, or pursuant to policies established by other Federal, State, or regional entities. These proposed elevations are used to meet the floodplain management requirements of the NFIP and are also used to calculate the appropriate flood insurance premium rates for new buildings built after these elevations are made final, and for the contents in these buildings.

Correction

In the proposed rule published at 73 FR 65811, in the November 5, 2008 issue of the **Federal Register**, FEMA published a table under the authority of 44 CFR 67.4. The table, entitled ''Kankakee County, Illinois and Incorporated Areas'' addressed flooding source South Branch Rock Creek. That table contained inaccurate information as to the location of referenced elevation, effective and modified elevation in feet, or communities affected for these flooding sources. In this notice, FEMA is publishing a table containing the accurate information, to address these prior errors. The information provided below should be used in lieu of that previously published.

Flooding source(s)	Location of referenced elevation**	* Elevation in feet (NGVD) + Elevation in feet (NAVD) # Depth in feet above ground		Communities affected
		Effective	Modified	
Kankakee County, Illinois and Incorporated Areas				
	* * * * *	None	+665	Kankakee County (Unincorporated Areas).
South Branch Rock Creek	Upstream side of South Locust Street	.....	.....	
	Approximately 2,600 feet downstream of Sycamore Street.	None	+665	

Dated: January 22, 2009.

Michael K. Buckley,

Acting Assistant Administrator, Mitigation Directorate, Department of Homeland Security, Federal Emergency Management Agency.

[FR Doc. E9–6701 Filed 3–24–09; 8:45 am]

BILLING CODE 9110–12–P

DEPARTMENT OF HOMELAND SECURITY

Federal Emergency Management Agency

44 CFR Part 67

[Docket ID FEMA–2008–0020; Internal Agency Docket No. FEMA–B–1016]

Proposed Flood Elevation Determinations

AGENCY: Federal Emergency Management Agency, DHS.

ACTION: Proposed rule; correction.

SUMMARY: On November 5, 2008, FEMA published in the **Federal Register** a proposed rule that contained an erroneous table. This notice provides corrections to that table, to be used in lieu of the information published at 73 FR 65816 through 65817. The table provided here represents the flooding source, location of referenced elevation, effective and modified elevation, and communities affected for St. Joseph County, Michigan (All Jurisdictions).

FOR FURTHER INFORMATION CONTACT: William R. Blanton, Jr., Chief, Engineering Management Branch, Mitigation Directorate, Federal Emergency Management Agency, 500 C Street, SW., Washington, DC 20472, (202) 646–3151 or (e-mail) *bill.blanton@dhs.gov.*

SUPPLEMENTARY INFORMATION: The Federal Emergency Management Agency (FEMA) publishes proposed determinations of Base (1% annual-chance) Flood Elevations (BFEs) and modified BFEs for communities participating in the National Flood Insurance Program (NFIP), in accordance with section 110 of the Flood Disaster Protection Act of 1973, 42 U.S.C. 4104, and 44 CFR 67.4(a).

These proposed BFEs and modified BFEs, together with the floodplain management criteria required by 44 CFR 60.3, are the minimum that are required. They should not be construed to mean that the community must change any existing ordinances that are more stringent in their floodplain management requirements. The community may at any time enact stricter requirements of its own, or pursuant to policies established by other Federal, State, or regional entities. These proposed elevations are used to meet the floodplain management requirements of the NFIP and are also used to calculate the appropriate flood insurance premium rates for new buildings built after these elevations are made final, and for the contents in these buildings.

Correction

In the proposed rule published at 73 FR 65816 through 65817, in the November 5, 2008 issue of the **Federal Register**, FEMA published a table under the authority of 44 CFR 67.4. The table, entitled ''St. Joseph County, Michigan and Incorporated Areas'' addressed flooding sources countywide. That table contained inaccurate information as to the location of referenced elevation, effective and modified elevation in feet, or communities affected for these flooding sources. In this notice, FEMA is publishing a table containing the accurate information, to address these prior errors. The information provided below should be used in lieu of that previously published notice.

Flooding source(s)	Location of referenced elevation**	* Elevation in feet (NGVD) + Elevation in feet (NAVD) # Depth in feet above ground ∧ Elevation in meters (MSL)		Communities affected
		Effective	Modified	
St. Joseph County, Michigan, and Incorporated Areas				
Adams Lake	Entire shoreline of Adams Lake	None	+843	Township of Leonidas.
Clear Lake	Entire shoreline of Clear Lake	None	+876	Township of Fabius.
Corey Lake	Entire shoreline of Corey Lake	None	+877	Township of Fabius.
Fishers Lake	Entire shoreline of Fishers Lake	None	+815	Township of Park.
Flowerfield Creek	Approximately 0.8 mile downstream of M 216 (Marcellus Road).	None	+817	Township of Flowerfield.
	Approximately 0.3 mile upstream of Main Street on the St. Joseph County/Kalamazoo County border.	None	+842	

Flooding source(s)	Location of referenced elevation**	* Elevation in feet (NGVD) + Elevation in feet (NAVD) # Depth in feet above ground ∧ Elevation in meters (MSL)		Communities affected
		Effective	Modified	
Kaiser Lake	Entire shoreline of Kaiser Lake	None	+877	Township of Fabius.
Lake Templene	Entire shoreline of Lake Templene	None	+831	Township of Sherman.
Long Lake	Entire shoreline of Long Lake	None	+892	Township of Fabius.
Mud Lake	Entire shoreline of Mud Lake	None	+877	Township of Fabius.
Pleasant Lake	Entire shoreline of Pleasant Lake	None	+853	Township of Fabius.
Spring Creek	At confluence with Flowerfield Creek	None	+821	Township of Flowerfield, Township of Park.
	Approximately 0.6 mile upstream of Quake Road on the St. Joseph County/Kalamazoo County border.	None	+844	
St. Joseph River	Approximately 0.7 mile downstream of Wakeman Road.	None	+829	Township of Mendon.
	Approximately 350 feet downstream of Wakeman road.	None	+829	
Unnamed pond	Entire shoreline of Unnamed pond	None	+815	Township of Park.

Dated: January 27, 2009.

Michael K. Buckley,

Acting Assistant Administrator, Mitigation Directorate, Department of Homeland Security, Federal Emergency Management Agency.

[FR Doc. E9–6704 Filed 3–24–09; 8:45 am]

BILLING CODE 9110–12–P

DEPARTMENT OF HOMELAND SECURITY

Federal Emergency Management Agency

44 CFR Part 67

[Docket ID FEMA–2008–0020; Internal Agency Docket No. FEMA–B–1022]

Proposed Flood Elevation Determinations

AGENCY: Federal Emergency Management Agency, DHS.

ACTION: Proposed Rule; correction.

SUMMARY: On December 9, 2008, FEMA published in the **Federal Register** a proposed rule that contained an erroneous table. This notice provides corrections to that table, to be used in lieu of the information published at 73 FR 74674. The table provided here represents the flooding source, location of referenced elevation, effective and modified elevation, and communities affected for the Unincorporated Areas of Marshall County, Illinois. Specifically, it addresses flooding sources Sandy Creek Tributary.

FOR FURTHER INFORMATION CONTACT: William R. Blanton, Jr., Chief, Engineering Management Branch, Mitigation Directorate, Federal Emergency Management Agency, 500 C Street SW., Washington, DC 20472, (202) 646–3151 or (e-mail) *bill.blanton@dhs.gov.*

SUPPLEMENTARY INFORMATION: The Federal Emergency Management Agency (FEMA) publishes proposed determinations of Base (1% annual-chance) Flood Elevations (BFEs) and modified BFEs for communities participating in the National Flood Insurance Program (NFIP), in accordance with section 110 of the Flood Disaster Protection Act of 1973, 42 U.S.C. 4104, and 44 CFR 67.4(a).

These proposed BFEs and modified BFEs, together with the floodplain management criteria required by 44 CFR 60.3, are the minimum that are required. They should not be construed to mean that the community must change any existing ordinances that are more stringent in their floodplain management requirements. The community may at any time enact stricter requirements of its own, or pursuant to policies established by other Federal, State, or regional entities. These proposed elevations are used to meet the floodplain management requirements of the NFIP and are also used to calculate the appropriate flood insurance premium rates for new buildings built after these elevations are made final, and for the contents in these buildings.

Correction

In the proposed rule published at 73 FR 74674, in the December 9, 2008 issue of the **Federal Register**, FEMA published a table under the authority of 44 CFR 67.4. The table, entitled ''Proposed Flood Elevation Determinations; Correction'' addressed flooding sources ''Sandy Creek Tributary.'' That table contained inaccurate information as to the location of referenced elevation, effective and modified elevation in feet, or communities affected for these flooding sources. In this notice, FEMA is publishing a table containing the accurate information, to address these prior errors. The information provided below should be used in lieu of that previously published notice.

Flooding source(s)	Location of referenced elevation**	* Elevation in feet (NGVD) + Elevation in feet (NAVD) # Depth in feet above ground ∧ Elevation in meters (MSL)		Communities affected
		Effective	Modified	
Marshall County, Illinois Unincorporated Areas				
Sandy Creek Tributary	From County Highway 14	None	+673	Unincorporated Areas of Marshall County.
	To approximately 140 feet northwest of the intersection of Hickory Street and South 5th Street in the City of Wenona.	None	+686	

Dated: February 6, 2009.

Michael K. Buckley,

Acting Assistant Administrator, Mitigation Directorate, Department of Homeland Security, Federal Emergency Management Agency.

[FR Doc. E9–6691 Filed 3–24–09; 8:45 am]

BILLING CODE 9110–12–P

Notices

Federal Register

Vol. 74, No. 56

Wednesday, March 25, 2009

This section of the FEDERAL REGISTER contains documents other than rules or proposed rules that are applicable to the public. Notices of hearings and investigations, committee meetings, agency decisions and rulings, delegations of authority, filing of petitions and applications and agency statements of organization and functions are examples of documents appearing in this section.

DEPARTMENT OF COMMERCE

Submission for OMB Review; Comment Request

The Department of Commerce will submit to the Office of Management and Budget (OMB) for clearance the following proposal for collection of information under the provisions of the Paperwork Reduction Act (44 U.S.C. Chapter 35).

Agency: National Oceanic and Atmospheric Administration (NOAA).

Title: Reporting of Sea Turtle Incidental Take in Virginia Chesapeake Bay Pound Net Operations.

Form Number(s): None.

OMB Approval Number: 0648–0470.

Type of Request: Regular submission.

Burden Hours: 102.

Number of Respondents: 41.

Average Hours per Response: 10 minutes.

Needs and Uses: As mandated by the Endangered Species Act of 1973 (16 U.S.C. 1531 *et seq.*), year-round reporting of sea turtle incidental take is necessary to (1) monitor the level of incidental take in the state-monitored pound net fishery, (2) ensure that the level of take does not exceed the Incidental Take Statement issued in conjunction with the Biological Opinion, and (3) verify that the seasonal pound net leader restrictions are adequate to protect sea turtles. Further, reporting the take of live, injured sea turtles caught in pound net gear will ensure these turtles are transferred immediately to a stranding and rehabilitation center for appropriate medical treatment. The respondents are Virginia pound net fishermen.

Affected Public: Individuals or households; State, Local or Tribal Government.

Frequency: Semi-annually.

Respondent's Obligation: Voluntary.

OMB Desk Officer: David Rostker, (202) 395–3897.

Copies of the above information collection proposal can be obtained by calling or writing Diana Hynek, Departmental Paperwork Clearance Officer, (202) 482–0266, Department of Commerce, Room 7845, 14th and Constitution Avenue, NW., Washington, DC 20230 (or via the Internet at *dHynek@doc.gov*).

Written comments and recommendations for the proposed information collection should be sent within 30 days of publication of this notice to David Rostker, OMB Desk Officer, FAX number (202) 395–7285, or *David_Rostker@omb.eop.gov*.

Dated: March 19, 2009.

Glenna Mickelson,

Management Analyst, Office of the Chief Information Officer.

[FR Doc. E9–6488 Filed 3–24–09; 8:45 am]

BILLING CODE 3510–22–P

DEPARTMENT OF COMMERCE

[Docket No. 090220220–9295–01]

Privacy Act of 1974; System of Records

AGENCY: U.S. Census Bureau, Department of Commerce.

ACTION: Notice of Amendment, Privacy Act System of Records; COMMERCE/CENSUS–8, Statistical Administrative Records System.

SUMMARY: In accordance with the Privacy Act of 1974, as amended, Title 5 United States Code (U.S.C.) 552a(e)(4) and (11); and Office of Management and Budget (OMB) Circular A–130, Appendix I, ''Federal Agency Responsibilities for Maintaining Records About Individuals,'' the Department of Commerce is issuing notice of intent to amend the system of records under COMMERCE/CENSUS–8, Statistical Administrative Records System, to update administrative information concerning the purpose of the system of records, categories of individuals and records covered by the system, retrievability, and safeguards for the records in the system; in addition to minor administrative updates. Accordingly, the COMMERCE/CENSUS–8, Statistical Administrative Records System notice published in the **Federal Register** on January 20, 2000 (65 FR 3202), is amended as below. We invite public comment on the system amendment announced in this publication.

DATES: *Comment Date:* To be considered, written comments on the proposed amended system must be submitted on or before April 24, 2009.

Effective Date: Unless comments are received, the amended system of records will become effective as proposed on the date of publication of a subsequent notice in the **Federal Register**.

ADDRESSES: Please address comments to: Chief Privacy Officer, Privacy Office, Room HQ—8H168, U.S. Census Bureau, 4600 Silver Hill Road, Washington, DC 20233–3700.

SUPPLEMENTARY INFORMATION: The Statistical Administrative Records System (StARS) supports the Census Bureau's core mission of producing economic and demographic statistics in accordance with Title 13, United States Code (U.S.C.) 41, 61, 81, 91, 101, 102, 131, 141, 181, 182, 193 and Title 15, United States Code (U.S.C.) 1525. Further, to the maximum extent possible and consistent with the kind, timeliness, quality and scope of the statistics required, the Census Bureau is mandated by 13 U.S.C. 6 to acquire information from public and private sources to ensure the efficient and economical conduct of its censuses and surveys by using that information instead of conducting direct inquiries. To provide the information on which the American public, businesses, policymakers, and analysts rely, the StARS organizes data from a variety of sources, thereby eliminating the need to collect information again. Avoiding new collections precludes duplication, enhances efficiency, significantly reduces the burden on respondents, and lowers the cost to taxpayers. Doing so also increases the quality, timeliness, and relevance of the information available to those making policy decisions that impact the public and private sectors. The information that StARS organizes comes from federal and state administrative record systems, private entities, current demographic and economic surveys, quinquennial Economic Censuses, and decennial Censuses of Population and Housing. The amended system also expands protections on access, storage, and use of personally identifiable data. The StARS is a statistical information system whose uses will not directly affect any individual. In order to protect personally identifiable information, the StARS is logically organized into three

components. The first component houses data sets with personal identifiers (Social Security Numbers and names) in a secure environment, with access restricted to fewer than ten sworn Census Bureau staff. The sole purpose of this component is to provide a controlled environment to remove and replace the identifying information (names and Social Security Numbers) contained in source files with unique non-identifying codes. No data containing Social Security Numbers are released from this environment. The second component consists of data sets that contain the unique non-identifying codes, with the personal identifiers removed. Records from them are extracted or combined as needed, based on the unique non-identifying codes, to prepare numerous statistical products. These extracts are only provided in conjunction with approved Census Bureau projects and programs. Each proposed use is reviewed by an in-house Project Review Board to ensure the data are used only for authorized purposes. Furthermore, individuals cannot access the extracts until their managers have assured that they have taken all required security and data stewardship training. The third component of StARS houses two types of data sets that contain the unique non-identifying codes that replaced the Social Security Numbers, but retain some name information. The first type contains business information including the names of businesses, some of which are the same as the name of the owner—''John Doe Consulting,'' for example. The second type is used solely for the purpose of providing contact information for respondents involved in the Census Bureau's surveys and censuses. The same safeguards on the use of these data sets as described for the second component apply here as well.

COMMERCE/CENSUS–8

SYSTEM NAME:

Delete and replace with the following language:

''Statistical Administrative Records System.''

SECURITY CLASSIFICATION:

None.

SYSTEM LOCATION:

Delete and replace with the following language:

''Bowie Computer Center, Bureau of the Census, 17101 Melford Blvd., Bowie, Maryland 20715.''

CATEGORIES OF INDIVIDUALS COVERED BY THE SYSTEM:

Delete and replace with the following language:

''This system covers the population of the United States. In order to approximate coverage of the population in support of its statistical programs, the Census Bureau will acquire administrative record files from the Departments of Agriculture, Education, Health and Human Services, Homeland Security, Housing and Urban Development, Labor, Treasury, Veterans Affairs and from the Office of Personnel Management, the Social Security Administration, the Selective Service System, and the U.S. Postal Service. Comparable data may also be sought from state agencies and commercial sources.''

CATEGORIES OF RECORDS IN THE SYSTEM:

Delete and replace with the following language:

''The first category contains records with personal identifiers (names and Social Security Numbers), with access restricted to fewer than ten sworn Census Bureau staff. The records are maintained in a secure restricted-access environment. They are used solely during a brief period while the personal identifiers are replaced with unique non-identifying codes. The second category contains records that are maintained on unique data sets that are extracted or combined on an as-needed basis using the unique non-identifying codes but with the original identifiers removed. These records may contain: Demographic information—date of birth, sex, race, ethnicity, household and family characteristics, education, marital status, tribal affiliation, and veteran's status; Geographical information—address and geographic codes; Mortality information—cause of death and hospitalization information; Health information—type of provider, services provided, cost of services, and quality indicators; Economic information—housing characteristics, income, occupation, employment and unemployment information, health insurance coverage, federal program participation, assets, and wealth. The third category contains two types of records that are maintained on unique data sets that are extracted or combined on an as-needed basis using the unique non-identifying codes but with some name information retained. One type of records contains: Business information—business name, revenues, number of employees, and industry codes in support of economic statistical products. The other type contains: Respondent contact information—name, address, telephone number, age, and sex in support of survey and census data collection efforts.''

AUTHORITIES FOR MAINTENANCE OF THE SYSTEM:

Delete and replace with the following language:

''13 U.S.C. 6.''

PURPOSE(S):

Delete and replace with the following language:

''The purpose of this system is to centralize and control the use of personally identifiable information by providing a secure repository that supports statistical operations through the removal of personal identifiers (Social Security Numbers and names), prior to delivery to other Census Bureau operating units. By combining current demographic and economic survey and census data with administrative record data from other agencies, and data procured from commercial sources on an as-needed basis, the Census Bureau will improve the quality and usefulness of its statistics and reduce the respondent burden associated with direct data collection efforts. The system will also be used to plan, evaluate, and enhance survey operations; improve questionnaire design and selected survey data products; and produce research and statistical products such as estimates of the demographic, social, and economic characteristics of the population.''

ROUTINE USES OF RECORDS MAINTAINED IN THE SYSTEM, INCLUDING CATEGORIES OF USERS AND THE PURPOSES OF SUCH USES:

Delete and replace with the following language:

''None. The StARS will be used only for statistical purposes. No disclosures which permit the identification of individual respondents, and no determinations affecting individual respondents, will be made.''

Add the following language:

DISCLOSURE TO CONSUMER REPORTING AGENCIES:

''None.''

POLICIES AND PRACTICES FOR STORING, RETRIEVING, ACCESSING, RETAINING, AND DISPOSING OF RECORDS IN THE SYSTEM:

STORAGE:

Delete and replace with the following language:

''Records will be stored in a secure computerized system and on magnetic media; output data will be either electronic or paper copies. Source data sets containing personal identifiers will be maintained in a secure restricted-access environment.''

RETRIEVABILITY:

Delete and replace with the following language:

''Staff producing statistical products will have access only to data sets from which Social Security Numbers have been deleted and replaced by unique non-identifying codes internal to the Census Bureau. Fewer than ten sworn Census Bureau staff, who work within a secure restricted-access environment, will be permitted to retrieve records containing Social Security Numbers.''

SAFEGUARDS:

Delete and replace with the following language:

''Each project must be approved by an in-house Project Review Board to ensure that data relating to the project will be used only for authorized purposes. All uses of the data will be only for statistical purposes, which by definition means that uses will not directly affect any individual. Once the Project Review Board has approved a project, construction of statistical extracts with information from one or more of the source data sets may occur. Extract data sets will be based on unique non-identifying codes and will only be released to designated sworn Census Bureau staff with a need-to-know. The data in the extracts for these projects will not be made publicly available. Any publications based on the StARS will be cleared for release under the direction of the Census Bureau's Disclosure Review Board, which will confirm that all the required disclosure protection procedures have been implemented. No information will be released that identifies any individual. All employees are subject to the restrictions, penalties, and prohibitions of 13 U.S.C. 9 and 214; 5 U.S.C. 552a(b)(4); 18 U.S.C. 1905; 26 U.S.C. 7213; and 42 U.S.C. 1306. When confidentiality or penalty provisions differ, the most stringent provisions apply to protect the data. Employees are regularly advised of the regulations issued pursuant to 13 U.S.C. 9 and 214 and other relevant statutes governing confidentiality of the data. For example, 13 U.S.C. 214 provides for penalties of up to five years in prison, and applicable criminal statutes could impose fines up to $250,000, for releases of confidential data. The restricted-access environment has been established to limit the number of Census Bureau employees with direct access to the personal identifiers in this system, so as to protect the confidentiality of the data and to prevent unauthorized use or access. These safeguards provide a level and scope of security that meet the level and scope of security established by the Office of Management and Budget in OMB Circular No. A–130, Appendix III, Security of Federal Automated Information Resources. Furthermore, the use of unsecured telecommunications to transmit individually identifiable information is prohibited.''

RETENTION AND DISPOSAL:

Delete and replace with the following language:

''Records are to be retained in accordance with the unit's Records Control Schedule, which is based on separate agreements with each source entity. Retention is not to exceed 10 years, unless, by agreement with the source entity, it is determined that a longer period is necessary for statistical purposes. At the end of the retention period or upon demand, all original data sets, extracts, and paper copies, from each source entity will be returned or destroyed as mandated by the agreements.''

SYSTEM MANAGER AND ADDRESS:

Delete and replace with the following language:

''Associate Director for Demographic Programs, U.S. Census Bureau, 4600 Silver Hill Road, Washington, DC 20233–8000.''

NOTIFICATION PROCEDURE:

Delete and replace with the following language:

''For the Census Bureau's records, information may be obtained from: Assistant Division Chief for Data Management, Data Integration Division, Demographic Directorate, U.S. Census Bureau, 4600 Silver Hill Road, Washington, DC 20233–8100.''

Add the following information:

RECORD ACCESS PROCEDURES:

See ''Record Notification Procedure'' above.

Add the following information:

CONTESTING RECORD PROCEDURES:

''None.''

RECORD SOURCE CATEGORIES:

Delete and replace with the following language:

''Individuals covered by selected administrative record systems and Census Bureau censuses and surveys.''

EXEMPTIONS CLAIMED FOR SYSTEM:

Delete and replace with the following language:

''Pursuant to 5 U.S.C. 552a(k)(4), this system of records is exempted from the notification, access, and contest requirements of the agency procedures (under 5 U.S.C. 552a(c)(3), (d), (e)(1), (e)(4)(G), (H), and (I), and (f)). This exemption is applicable as the data are maintained by the Bureau of the Census solely as statistical records, as required under Title 13 U.S.C., and are not used in whole or in part in making any determination about an identifiable individual. This exemption is made in accordance with agency rules published in the rules section of this **Federal Register**.''

Dated: March 19, 2009.

Brenda Dolan,

Department of Commerce, Freedom of Information/Privacy Act Officer.

[FR Doc. E9–6557 Filed 3–24–09; 8:45 am]

BILLING CODE 3510–07–P

DEPARTMENT OF COMMERCE

Bureau of Industry and Security

Action Affecting Export Privileges; Balli Group PLC; Balli Aviation; Balli Holdings; Vahid Alaghband; Hassan Alaghband; Blue Sky One Ltd.; Blue Sky Two Ltd.; Blue Sky Three Ltd.; Blue Airways; Mahan Airways; Blue Airways FZE

In the matter of:

Balli Group PLC, 5 Stanhope Gate, London, UK, W1K 1AH;
Balli Aviation, 5 Stanhope Gate, London, UK, W1K 1AH;
Balli Holdings, 5 Stanhope Gate, London, UK, W1K 1AH;
Vahid Alaghband, 5 Stanhope Gate, London, UK, W1K 1AH;
Hassan Alaghband, 5 Stanhope Gate, London, UK, W1K 1AH;
Blue Sky One Ltd., 5 Stanhope Gate, London, UK, W1K 1AH;
Blue Sky Two Ltd., 5 Stanhope Gate, London, UK, W1K 1AH;
Blue Sky Three Ltd., 5 Stanhope Gate, London, UK, W1K 1AH;
Blue Airways, 8/3 D Angaght Street, 376009 Yerevan, Armenia;
Mahan Airways, Mahan Tower, No. 21, Azadegan St., M.A. Jenah Exp. Way, Tehran, Iran; Respondents;

and

Blue Airways FZE, a/k/a Blue Airways, #G22 Dubai Airport Free Zone, P.O. Box 393754 DAFZA, Dubai, UAE;
Blue Airways, Riqa Road, Dubai 52404, UAE; Related Persons.

Order Renewing Order Temporarily Denying Export Privileges

Pursuant to Section 766.24 of the Export Administration Regulations, 15 CFR Parts 730–774 (2008) (''EAR'' or the ''Regulations''), I hereby grant the request of the Bureau of Industry and Security (''BIS'') to renew for 180 days the Order Temporarily Denying the Export Privileges of Respondents Balli Group PLC, Balli Aviation, Balli

Holdings, Vahid Alaghband, Hassan Alaghband, Blue Sky One Ltd., Blue Sky Two Ltd., Blue Sky Three Ltd., Blue Airways and Mahan Airways (collectively, ''Respondents'') and Blue Airways FZE and Blue Airways (collectively the ''Related Persons''), as I find that renewal of the TDO is necessary in the public interest to prevent an imminent violation of the EAR. However, I do not renew the TDO against Blue Sky Four Ltd., Blue Sky Five Ltd., and Blue Sky Six Ltd., who were each Respondents in the initial TDO and the September 17, 2008 Renewal Order.

I. Procedural History

On March 17, 2008, the Assistant Secretary of Commerce for Export Enforcement (''Assistant Secretary'') signed an Order Temporarily Denying the Export Privileges of Balli Group PLC, Balli Aviation, Balli Holdings, Vahid Alaghband, Hassan Alaghband, Blue Sky One Ltd., Blue Sky Two Ltd., Blue Sky Three Ltd., Blue Sky Four Ltd., Blue Sky Five Ltd., Blue Sky Six Ltd., Blue Airways and Mahan Airways for 180 days on the grounds that its issuance was necessary in the public interest to prevent an imminent violation of the Regulations (''TDO''). The TDO was issued *ex parte* pursuant to Section 766.24(a), and went into effect on March 21, 2008, the date it was published in the **Federal Register**. On July 18, 2008, the Assistant Secretary issued an Order adding Blue Airways FZE and Blue Airways, both of Dubai, United Arab Emirates, as Related Persons to the TDO in accordance with Section 766.23 of the Regulations.[1] On September 17, 2008, the TDO was renewed for an additional 180 days in accordance with Section 766.24 of the Regulations, and was effective upon issuance.[2] The TDO would expire on March 16, 2009, unless renewed in accordance with Section 766.24 of the Regulations.

On February 24, 2009, BIS, through its Office of Export Enforcement (''OEE''), filed a written request for renewal of the TDO against each of the Respondents and Related Persons for an additional 180 days, and served a copy of its request on the Respondents and Related Persons in accordance with Section 766.5 of the Regulations. On the evening of March 9, 2009, Balli Group PLC, Balli Aviation, Balli Holdings, Vahid Alaghband, Hassan Alaghband, Blue Sky One Ltd., Blue Sky Two Ltd., Blue Sky Three Ltd., Blue Sky Four Ltd., Blue Sky Five Ltd., and Blue Sky Six Ltd. (collectively, ''Balli'' or the ''Balli Respondents'') submitted an opposition to the renewal request. As part of its opposition, the Balli Respondents submitted a request for a copy of the TDO renewal request exhibits. On March 12, 2009, I issued an Order granting discovery to the Balli Respondents of a copy of all of the exhibits referenced in OEE's renewal request, and a copy of the exhibits was provided to Balli that same day. No opposition to renewal of the TDO was received from Respondents Blue Airways or Mahan Airways.

II. Discussion

A. Legal Standard

Pursuant to section 766.24(d)(3) of the EAR, the sole issue to be considered in determining whether to continue a TDO is whether the TDO should be renewed to prevent an ''imminent'' violation of the EAR as defined in Section 766.24. ''A violation may be 'imminent' either in time or in degree of likelihood.'' 15 CFR 766.24(b)(3). BIS may show ''either that a violation is about to occur, or that the general circumstances of the matter under investigation or case under criminal or administrative charges demonstrate a likelihood of future violations.'' *Id.* As to the likelihood of future violations, BIS may show that ''the violation under investigation or charges is significant, deliberate, covert and/or likely to occur again, rather than technical and negligent[.]'' *Id.* A ''lack of information establishing the precise time a violation may occur does not preclude a finding that a violation is imminent, so long as there is sufficient reason to believe the likelihood of a violation.'' *Id.*

B. The TDO and BIS's Request for Renewal

OEE's request for renewal of the TDO was based upon the facts underlying the issuance of the initial TDO, as well as evidence developed over the course of this investigation indicating a clear willingness on the part of the Balli Respondents to disregard U.S. export controls and engage in a pattern of false and deceptive statements. The initial TDO was issued as a result of evidence that showed that the Respondents engaged in conduct prohibited by the EAR by knowingly re-exporting to Iran three U.S.-origin aircraft, specifically Boeing 747s (''Aircraft 1–3''), items subject to the EAR and classified under Export Control Classification Number (''ECCN'') 9A991.b, without the required U.S. Government authorization. Further evidence submitted by BIS indicated that Respondents were attempting to re-export three additional U.S.-origin Boeing 747s to Iran (''Aircraft 4–6''), and had ignored a re-delivery order for these additional three aircraft issued by BIS in accordance with Section 758.8(b) of the Regulations.

As more fully discussed in the September 17, 2008 TDO Renewal Order, evidence presented with BIS's August 28, 2008 renewal request and Balli's September 10, 2008 opposition and ''supplemental disclosure'' indicated that Aircraft 1–3 continued to be flown on Mahan Airways' routes after issuance of the TDO, in violation of the Regulations and the TDO itself.[3] It also showed that Aircraft 1–3 had been and continued to be flown in further violation of the Regulations and the TDO on the routes of Iran Air, an Iranian Government airline. The Balli Respondents also made unsubstantiated and unpersuasive assertions concerning their level of knowledge of the potential unlawfulness of their actions, including long denying any involvement by Mahan Airways with Aircraft 1–3 and ignoring warnings from both BIS and Boeing concerning their lease and operation, and concerning their level of cooperation with BIS and efforts to recover the aircraft.

At the time of the TDO, the Balli Respondents had failed to produce any documents concerning payments for the leases of Aircraft 1–3, which Balli maintained only involved Blue Airways. As part of its renewal request, OEE has presented evidence that the Aircraft 1–3 were financed by Mahan Air and evidence of contracts between Balli and Mahan Airways regarding the acquisition and operation of the aircraft that were signed by Balli's Chief Executive Officer (''CEO'') Hassan Alaghband. OEE has also produced documents showing that more than one Iranian bank was used by the Respondents to facilitate the transaction. OEE argues that the contracts and agreements between Balli and Mahan Airways provide further evidence of Mahan's involvement with the lease and operation of Aircraft 1–3, as well as the false and misleading nature of multiple statements by Balli during this investigation that it had no knowledge its actions were in violation or potential violation of the Regulations and that it was unaware of Mahan's role in the acquisition and use of the aircraft.

[1] The Related Persons Order was issued in accordance with Section 766.23 of the Regulations, 15 CFR § 766.23, and was published in the **Federal Register** on July 24, 2008.

[2] The September 17, 2008 Renewal Order was published in the **Federal Register** on October 1, 2008.

[3] Engaging in conduct prohibited by a denial order violates the Regulations. 15 CFR 764.2(a) and (k).

As noted above, OEE also is requesting the TDO be renewed against Blue Airways and Mahan Airways based on their participation in the violations discussed in the initial and renewed TDOs, as well as additional unlawful actions since the TDO was renewed on September 17, 2008. Specifically, in October 2008, Mahan Airways and Blue Airways deregistered Aircraft 1–3 from the Armenian civil aircraft registry and subsequently registered the aircraft in Iran. The aircraft have been relocated to Iran and have been issued Iranian tail numbers, including EP–MNA and EP–MNB, and continue to be operated on Mahan Airway flights in violation of the Regulations and the TDO.

On February 10, 2009, almost one year after the initial TDO was issued, the Balli Respondents for the first time acknowledged the existence of a side letter agreement between Balli, Mahan Airways and other parties which included certain drafted and undated bills of sales allowing ownership of Aircraft 1–3 to be transferred to Mahan Airways. However, this partial acknowledgment, contained in one of Balli's court filings in the United Kingdom, fails to explain the full scope and involvement of Mahan Airways in this transaction.

C. The Respondents' Opposition to the Renewal Request

The Balli Respondents, through counsel, oppose renewal of the TDO on three grounds: (1) None of the six aircraft[4] in the initial TDO are currently subject to the control of the Balli Respondents, and specifically that Aircraft 1–3 ''were subject to unauthorized release by Blue Airways and conversion in October 2008, as set forth in documents submitted to OEE investigators on February 10, 2009[,]'' Balli Opposition, at 3; (2) Balli is engaged in on-going efforts to produce documents and information requested by OEE; and (3) Balli is engaged in on-going litigation in the United Kingdom against Blue Airways and Mahan Airways regarding ownership and possession of the aircraft.

D. Findings

In determining whether to renew the TDO in order to prevent imminent violation of the Regulations, I have reviewed the entire record, including OEE's and Balli's current and prior submissions and related evidence. I find that violations of the Regulations have occurred and continue to occur involving the unlicensed re-export of Aircraft 1–3 to Iran. Moreover, Aircraft 1–3 are currently located in Iran and are registered and/or operated by the Respondents in violation of the Regulations and the TDO. In addition, the Balli Respondents have engaged in a repeated pattern of making false and deceptive statements to BIS in order to both conceal the true nature of their activities and to seek termination of the TDO against them. Contrary to Balli's previous submissions and efforts to mislead BIS, OEE's investigation has obtained evidence that Balli was dealing directly with Mahan Airways officials to obtain financing and to negotiate and enter agreements pertaining to the purchase and lease of three Boeing 747 aircraft (Aircraft 1–3). Moreover, the record shows that more than one Iranian bank was used by Balli and Mahan Airways to transfer funds for the acquisition of the aircraft.

This evidence directly calls into doubt the veracity of prior submissions by the Balli Respondents to the Assistant Secretary and BIS. For example, by letter dated October 10, 2007, BIS warned Balli, via its English counsel, that ''[i]t has come to BIS's attention there is evidence that during this lease agreement Blue Airways operated the three 747s aircraft by or for the benefit of an Iranian entity, specifically Mahan Air.'' Despite the fact that Balli Respondent and CEO Hassan Alaghband signed contracts with Mahan Airways in May of 2007, Balli stated in its September 10, 2008 submission that the Balli Respondents had ''failed to focus on the underlying substantive legal concerns associated with Boeing and BIS communications,'' because they believed they were targets of a ''disinformation campaign'' orchestrated by ''Iranian expatriate groups that have a long history of hostility to Balli interests and the Alaghband family[,]'' including ''militant opposition groups hostile to Iran, including the Mujahedin-e-Khalq.'' BIS and Boeing's communications involved warnings to Balli that the aircraft were being operated in violation of the Regulations and were being flown by or for the benefit of Mahan Airways. Balli's production of requested documents and information has been delayed, limited and halting at best, and its repeated pattern of false and misleading statements further undermines its assertions concerning complete, good faith cooperation with BIS.

Balli's opposition asserts that Aircraft 1–3 ''were subject to unauthorized release by Blue Airways and conversion in October 2008, as set forth in documents submitted to OEE investigators on February 10, 2009.'' Balli Opposition, at 3. Balli also has asserted that Blue Airways and Mahan Airways ''have previously fabricated documents—in the offices of Mahan Airlines in Teheran, Iran—which were used to unlawfully effect transfer of control of the subject aircraft for use in Iran.'' *Id.*, at 2. These assertions feed into the Balli Respondents' remaining arguments that the TDO should be terminated against them on the grounds that they no longer control Aircraft 1–3 and are litigating with those entities in England, with an expected July 2009 trial date.

I find Balli's argument that it is currently in litigation against Mahan Airways and Blue Airways in England to be an unpersuasive and insufficient basis to terminate the TDO against Balli, particularly in light of recent evidence that, contrary to prior statements and submissions to BIS and the Assistant Secretary, Balli negotiated directly with Mahan Air regarding the financing and operation of the aircraft. However, I find based upon the entire record before me, including submissions from OEE and Balli, that Aircraft 4–6 have been physically and legally repossessed by the lender, which is not a respondent in this action. Therefore, the TDO shall not be renewed as to Respondents Blue Sky Four Ltd., Blue Sky Five Ltd., and Blue Sky Six Ltd.

Unlike the facts involving Aircraft 4–6, Balli's argument based on the asserted ground that Aircraft 1–3 are not currently under its control due to the alleged conversion—which Balli asserts resulted (as referenced above) in the transfer of control of the subject aircraft ''for use in Iran''—is unpersuasive and insufficient. Although the Balli Respondents refused until September 10, 2008, to admit or acknowledge Mahan Airway's involvement, the record indicates that Aircraft 1–3 were already in use in Iran under the leases between Balli and, at least nominally, Blue Airways. Moreover, the record before me contains evidence indicating that the Balli Respondents knowingly arranged for the financing of the aircraft with Mahan Airways. This evidence may well explain why the Balli Respondents were unable to produce evidence demonstrating any lease payments by Blue Airways. In any event, the fact that Balli is now involved in an apparent contractual dispute with its co-conspirators involving items re-exported in violation of the Regulations is simply not a proper basis to let the TDO expire, especially in light of Balli's pattern of false and misleading statements to BIS.

[4] The record indicates that Aircraft 4–6 have been repossessed by the lender. This information is only relevant to Respondents Blue Sky Four Ltd., Blue Sky Five Ltd. and Blue Sky Six Ltd.

I have considered all of Balli's arguments and with the exception of the argument involving Aircraft 4–6 find them without merit. I find that the evidence presented by BIS convincingly demonstrates that the Respondents have violated the EAR and the TDO involving re-exports of aircraft to Iran, that such violations have been significant, deliberate and covert, and that there is a likelihood of future violations. As such, a TDO is needed to give notice to persons and companies in the United States and abroad that they should continue to cease dealing with the Respondents in export transactions involving items subject to the EAR. Such a TDO is consistent with the public interest to prevent or preclude violations of the EAR.

Accordingly, I find pursuant to Section 766.24, that renewal of the TDO for 180 days against Balli Group PLC, Balli Aviation, Balli Holdings, Vahid Alaghband, Hassan Alaghband, Blue Sky One Ltd., Blue Sky Two Ltd., Blue Sky Three Ltd., Blue Airways and Mahan Airways and both Related Persons is necessary in the public interest to prevent an imminent violation of the EAR.

III. Order

It is therefore ordered:

First, that the Respondents, BALLI GROUP PLC, 5 Stanhope Gate, London, UK, W1K 1AH; BALLI AVIATION, 5 Stanhope Gate, London, UK, W1K 1AH; BALLI HOLDINGS, 5 Stanhope Gate, London, UK, W1K 1AH; VAHID ALAGHBAND, 5 Stanhope Gate, London, UK, W1K 1AH; HASSAN ALAGHBAND, 5 Stanhope Gate, London, UK, W1K 1AH; BLUE SKY ONE LTD., 5 Stanhope Gate, London, UK, W1K 1AH; BLUE SKY TWO LTD., 5 Stanhope Gate, London, UK, W1K 1AH; BLUE SKY THREE LTD., BLUE AIRWAYS, 8/3 D Angaght Street, 376009 Yerevan, Armenia; and MAHAN AIRWAYS, Mahan Tower, No. 21, Azadegan St., M.A. Jenah Exp.Way, Tehran, Iran (each a ''Denied Person'' and collectively the ''Denied Persons''), and BLUE AIRWAYS FZE, a/k/a Blue Airways, #G22 Dubai Airport Free Zone, P.O. Box 393754 DAFZA, Dubai, United Arab Emirates and BLUE AIRWAYS, Riqa Road, Dubai 52404, United Arab Emirates (each a ''Related Person'' and collectively the ''Related Persons'') may not, directly or indirectly, participate in any way in any transaction involving any commodity, software or technology (hereinafter collectively referred to as ''item'') exported or to be exported from the United States that is subject to the Export Administration Regulations (''EAR''), or in any other activity subject to the EAR including, but not limited to:

A. Applying for, obtaining, or using any license, License Exception, or export control document;

B. Carrying on negotiations concerning, or ordering, buying, receiving, using, selling, delivering, storing, disposing of, forwarding, transporting, financing, or otherwise servicing in any way, any transaction involving any item exported or to be exported from the United States that is subject to the EAR, or in any other activity subject to the EAR; or

C. Benefiting in any way from any transaction involving any item exported or to be exported from the United States that is subject to the EAR, or in any other activity subject to the EAR.

Second, that no person may, directly or indirectly, do any of the following:

A. Export or reexport to or on behalf of the Denied Persons or Related Persons any item subject to the EAR;

B. Take any action that facilitates the acquisition or attempted acquisition by the Denied Persons or Related Persons of the ownership, possession, or control of any item subject to the EAR that has been or will be exported from the United States, including financing or other support activities related to a transaction whereby the Denied Persons or Related Persons acquires or attempts to acquire such ownership, possession or control;

C. Take any action to acquire from or to facilitate the acquisition or attempted acquisition from the Denied Persons or Related Persons of any item subject to the EAR that has been exported from the United States;

D. Obtain from the Denied Persons or Related Persons in the United States any item subject to the EAR with knowledge or reason to know that the item will be, or is intended to be, exported from the United States; or

E. Engage in any transaction to service any item subject to the EAR that has been or will be exported from the United States and which is owned, possessed or controlled by the Denied Persons or Related Persons, or service any item, of whatever origin, that is owned, possessed or controlled by the Denied Persons or Related Persons if such service involves the use of any item subject to the EAR that has been or will be exported from the United States. For purposes of this paragraph, servicing means installation, maintenance, repair, modification or testing.

Third, that, after notice and opportunity for comment as provided in section 766.23 of the EAR, any other person, firm, corporation, or business organization related to any of the Denied Persons by affiliation, ownership, control, or position of responsibility in the conduct of trade or related services may also be made subject to the provisions of this Order.

Fourth, that this Order does not prohibit any export, reexport, or other transaction subject to the EAR where the only items involved that are subject to the EAR are the foreign-produced direct product of U.S.-origin technology.

In accordance with the provisions of Section 766.24(e) of the EAR, the Respondents may, at any time, appeal this Order by filing a full written statement in support of the appeal with the Office of the Administrative Law Judge, U.S. Coast Guard ALJ Docketing Center, 40 South Gay Street, Baltimore, Maryland 21202–4022.

In accordance with the provisions of Section 766.24(d) of the EAR, BIS may seek renewal of this Order by filing a written request not later than 20 days before the expiration date. The Respondents may oppose a request to renew this Order by filing a written submission with the Assistant Secretary of Commerce for Export Enforcement, which must be received not later than seven days before the expiration date of the Order.

A copy of this Order shall be served on the Respondents and the Related Persons and shall be published in the **Federal Register**.

This Order is effective immediately and shall remain in effect for 180 days.

Entered this 16th day of March 2009.

Kevin Delli-Colli,

Acting Assistant Secretary of Commerce for Export Enforcement.

[FR Doc. E9–6607 Filed 3–24–09; 8:45 am]

BILLING CODE 3510–DT–P

DEPARTMENT OF COMMERCE

National Oceanic and Atmospheric Administration

RIN: 0648–XO35

Gulf of Mexico Fishery Management Council; Public Meetings

AGENCY: National Marine Fisheries Service (NMFS), National Oceanic and Atmospheric Administration (NOAA), Commerce.

ACTION: Notice of public meetings.

SUMMARY: The Gulf of Mexico Fishery Management Council (Council) will convene public meetings.

DATES: The meetings will be held April 14–17, 2009.

ADDRESSES: The meetings will be held at the W New Orleans, 333 Poydras St., New Orleans, LA 70130.

Council address: Gulf of Mexico Fishery Management Council, 2203 North Lois Avenue, Suite 1100, Tampa, FL 33607.

FOR FURTHER INFORMATION CONTACT: Dr. Richard Leard, Interim Executive Director, Gulf of Mexico Fishery Management Council; telephone: (813) 348–1630.

SUPPLEMENTARY INFORMATION:

Council

Thursday, April 16, 2009—The Council meeting will begin at 1:30 p.m. with a review of the agenda and minutes.

From 1:45 p.m.–2:45 p.m., the Council will receive public testimony on exempted fishing permits (EFPs), if any; and Open Public Comment Period regarding any fishery issue of concern. People wishing to speak before the Council should complete a public comment card prior to the comment period.

From 2:45 p.m.–5 p.m., the Council will review and discuss the report of the committee meetings as follows: Budget/Personnel; Data Collection; Sustainable Fisheries/Ecosystem; CLOSED SESSION—AP Selection and SSC Selection.

Friday, April 17, 2009

From 8:30 a.m.–12 p.m. and 1:30 p.m.–2 p.m., the Council will continue to review and discuss reports from the committee meetings as follows: Administrative Policy; Outreach & Education; AP Selection; SSC Selection; and Reef Fish Management.

From 2 p.m.–2:30 p.m., Other Business items will follow. The Council will conclude its meeting at approximately 2:30 p.m.

Committees

Tuesday, April 14, 2009

8:30 a.m.–10 a.m.—CLOSED SESSION—The AP Selection Committee will meet to select members of Council Advisory Panels.

10 a.m.–12 p.m.—CLOSED SESSION—The SSC Selection Committee will meet to review the SSC Job Description and select members of the Scientific and Statistical Committees.

1:30 p.m.–2 p.m.—The Budget/Personnel Committee will meet to review the 2009 Budget.

2 p.m.–5:30 p.m.—The Data Collection Committee will listen to presentations on Olfish/Environmental Defense Electronic Logbook Pilot Project; North Carolina Text Message Based Reporting Pilot Project and CLS America's Satellite Based Environmental Data Collection, as well as, report from the GSMFC FIN Committee Meeting.

Wednesday, April 15, 2009

8:30 a.m.–9:30 a.m.—The Sustainable Fisheries/Ecosystem Committee will meet to discuss a Paper for Generic ACL/AM Amendment and select Scoping Hearing Locations.

9:30 a.m.–12 p.m. and 1:30 p.m.–5:30 p.m.—The Reef Fish Management Committee will meet to discuss the Draft Reef Fish Amendment 31/DEIS to address Longline/Turtle Interactions; SEP Meeting Report; Allocation of Species in Reef Fish Amendments 30A & 30B; a Status Report from the Gag/Red Grouper Update Assessment workshop; a potential Reef Fish IFQ Amendment and a potential New Recreational Catch Accountability and Reporting AP.

5:30 p.m.–6:30 p.m.—There will be an Informal Open Public Question and Answer Session.

Thursday, April 16, 2009

8:30 a.m.–10:30 a.m.—The Administrative Policy Committee will discuss Draft Changes to SOPPs from MSRA.

10:30 a.m.–12 p.m.—The Outreach & Education Committee will meet to discuss the Report from the Outreach and Education AP Meeting.

Although other non-emergency issues not on the agendas may come before the Council and Committees for discussion, in accordance with the Magnuson--Stevens Fishery Conservation and Management Act (Magnuson-Stevens Act), those issues may not be the subject of formal action during these meetings. Actions of the Council and Committees will be restricted to those issues specifically identified in the agendas and any issues arising after publication of this notice that require emergency action under Section 305(c) of the Magunson-Stevens Act, provided the public has been notified of the Council's intent to take action to address the emergency. The established times for addressing items on the agenda may be adjusted as necessary to accommodate the timely completion of discussion relevant to the agenda items. In order to further allow for such adjustments and completion of all items on the agenda, the meeting may be extended from, or completed prior to the date established in this notice.

Special Accommodations

These meetings are physically accessible to people with disabilities. Requests for sign language interpretation or other auxiliary aids should be directed to Tina O'Hern at the Council (see **ADDRESSES**) at least 5 working days prior to the meeting.

Dated: March 20, 2009.

Tracey L. Thompson,

Acting Director, Office of Sustainable Fisheries, National Marine Fisheries Service.

[FR Doc. E9–6506 Filed 3–24–09; 8:45 am]

BILLING CODE 3510–22–S

DEPARTMENT OF COMMERCE

National Oceanic and Atmospheric Administration

RIN 0648–XO15

Taking and Exporting Marine Mammals; Taking Marine Mammals Incidental to the Knik Arm Crossing

AGENCY: National Marine Fisheries Service (NMFS), National Oceanic and Atmospheric Administration (NOAA), Commerce.

ACTION: Notice; withdrawal of application.

SUMMARY: Notice is hereby given that the Knik Arm Bridge Toll Authority (KABATA), 550 West 7th Ave, Suite 1850, Anchorage, Alaska, 99501, has withdrawn its application for regulations and subsequent Letters of Authorization (LOAs) regarding the harassment of marine mammals incidental to construction of the Knik Arm Crossing.

ADDRESSES: The documents related to this action are available for review upon written request or by appointment in the following offices:

Permits, Conservation and Education Division, Office of Protected Resources, NMFS, 1315 East-West Highway, Room 13705, Silver Spring, MD 20910; phone (301) 713–2289; fax (301) 427–2521; and

Alaska Region, NMFS, P.O. Box 21668, Juneau, AK 99802–1668; phone (907) 586–7221; fax (907) 586–7249.

FOR FURTHER INFORMATION CONTACT: Jaclyn Daly, (301) 713–2289.

SUPPLEMENTARY INFORMATION: On August 23, 2006, a notice was published in the **Federal Register** (71 FR 49433) that an application for regulations governing the incidental take of marine mammals had been filed by KABATA. The Knik Arm Crossing is a proposed bridge across Knik Arm, linking Anchorage and the Matanuska-Susitna Borough. Construction of the bridge would result in the harassment of marine mammals, including, but not limited to, the endangered Cook Inlet beluga whale (*Dephinapterus leucas*). On March 12,

2009, KABATA submitted a letter to NMFS announcing the withdrawal of their request for regulations and subsequent LOAs. Consequently, NMFS has terminated the processing of KABATA's application.

Dated: March 19, 2009.

James H. Lecky,

Director, Office of Protected Resources, National Marine Fisheries Service.

[FR Doc. E9–6635 Filed 3–24–09; 8:45 am]

BILLING CODE 3510–22–S

DELAWARE RIVER BASIN COMMISSION

Request for Existing Water Quality Data to Support Development of the 2010 Delaware River and Bay Integrated List Water Quality Assessment Report in Accordance With Section 305(b) of the Federal Clean Water Act

AGENCY: Delaware River Basin Commission (DRBC).

ACTION: Request for water quality data.

SUMMARY: The DRBC is soliciting readily available water quality data collected between January 1, 2005 and September 30, 2009 for use in development of DRBC's *2010 Delaware River and Bay Integrated List Water Quality Assessment Report* (Integrated Report). The Integrated Report fulfills the biennial reporting requirement of sections 305(b) of the Federal Clean Water Act (CWA). It identifies water quality standards attained, documents the availability of data and information for each water quality zone, identifies certain trends in water quality conditions, and sets priorities for protecting and restoring the health of the main stem Delaware River and Delaware Bay. The four basin states—New York, Pennsylvania, New Jersey and Delaware—will consider the Integrated Report in developing their lists of impaired waters in accordance with section 303(d) of the CWA. DRBC plans to submit the draft 2010 Integrated Report to USEPA by April 2010.

DATES: DRBC must receive data submissions on or before August 31, 2009.

ADDRESSES: Mail submissions to Erin McCracken, Water Resource Planner, Delaware River Basin Commission, P.O. Box 7360, 25 State Police Drive, West Trenton, NJ 08628–0360; fax to *Attn:* Erin McCracken, Delaware River Basin Commission, 609–883–9522; or send electronic submissions to *erin.mccracken@drbc.state.nj.us. See* **SUPPLEMENTARY INFORMATION** for proper labeling of submissions.

SUPPLEMENTARY INFORMATION:

Types of Data. The following types of data are requested: data relating to aquatic life: dissolved oxygen (DO), turbidity, temperature, pH, total dissolved solids (TDS), alkalinity, toxic pollutants, macroinvertebrate data and fish tissue data; data relating to drinking water uses: dissolved oxygen (DO), turbidity, temperature, pH, total dissolved solids (TDS), chlorides, hardness, odor, phenols, sodium (Na), turbidity, systematic toxicants, carcinogens and drinking water closures; and data relating to recreational uses: fecal coliform and enterococcus.

Data for Use in Future Reports. Data collected after September 30, 2009 or submitted after August 31, 2009 may be considered for subsequent integrated reports prepared by the DRBC.

Most Recent Integrated Report. The *2008 Delaware River and Bay Integrated List Water Quality Assessment Report* is available at *www.state.nj.us/drbc/08IntegratedList/index.htm.*

Proper Labeling of Submissions. Please use 2010 REPORT DATA in the subject line for all data submissions.

FOR FURTHER INFORMATION CONTACT: John Yagecic, Supervisor, Standards and Assessment Section, DRBC, 609–883–9500 ext. 271, *john.yagecic@drbc.state.nj.us.*

Dated: March 19, 2009.

Pamela M. Bush,

Commission Secretary & Assistant General Counsel.

[FR Doc. E9–6556 Filed 3–24–09; 8:45 am]

BILLING CODE 6360–01–P

DEPARTMENT OF EDUCATION

Submission for OMB Review; Comment Request

AGENCY: Department of Education.

SUMMARY: The Director, Information Collection Clearance Division, Regulatory Information Management Services, Office of Management invites comments on the submission for OMB review as required by the Paperwork Reduction Act of 1995.

DATES: Interested persons are invited to submit comments on or before April 24, 2009.

ADDRESSES: Written comments should be addressed to the Office of Information and Regulatory Affairs, Attention: Education Desk Officer, Office of Management and Budget, 725 17th Street, NW., Room 10222, New Executive Office Building, Washington, DC 20503 or faxed to (202) 395–6974.

SUPPLEMENTARY INFORMATION: Section 3506 of the Paperwork Reduction Act of 1995 (44 U.S.C. Chapter 35) requires that the Office of Management and Budget (OMB) provide interested Federal agencies and the public an early opportunity to comment on information collection requests. OMB may amend or waive the requirement for public consultation to the extent that public participation in the approval process would defeat the purpose of the information collection, violate State or Federal law, or substantially interfere with any agency's ability to perform its statutory obligations. The Director, Regulatory Information Management Services, Office of Management, publishes that notice containing proposed information collection requests prior to submission of these requests to OMB. Each proposed information collection, grouped by office, contains the following: (1) Type of review requested, *e.g.* new, revision, extension, existing or reinstatement; (2) Title; (3) Summary of the collection; (4) Description of the need for, and proposed use of, the information; (5) Respondents and frequency of collection; and (6) Reporting and/or Recordkeeping burden. OMB invites public comment.

Dated: March 20, 2009.

Angela C. Arrington,

Director, Information Collection Clearance Official,Regulatory Information Management Services,Office of Management.

Federal Student Aid

Type of Review: New.

Title: College.gov Career Tools and college coaches.

Frequency: On occasion.

Affected Public: Businesses or other for-profit, individuals or household.

Reporting and Recordkeeping Hour Burden:

Responses: 400.

Burden Hours: 133.

Abstract: The purpose for including the Career Tool and I'm Going Guide features is to provide students with real world, relatable examples of current college students who were able to overcome obstacles in order to reach a postsecondary education. This feature builds on College.gov's objective to provide students with the inspiration and hope to see that a college education is possible for everyone (especially targeting underrepresented populations). In the I'm Going Guide feature, students can select current college students to view their profiles, see why and how they went to college,

and read the college student's advice for high school students. Each student's profile would include their first name, photo, major and brief description about the student, such as where they are studying, and tips for other students. For the Career Tool feature, the site would show 24 different college grads at a time, but the goal would be to have about 75 that we could ''shuffle'' on the tool's display. Each college grad's profile would provide their first name, major, career field, and advice for students interested in their field of study. This information clearance will enable the Department to college grad profiles for including in the Career Tool and I'm Going Guide.

Requests for copies of the information collection submission for OMB review may be accessed from *http://edicsweb.ed.gov*, by selecting the ''Browse Pending Collections'' link and by clicking on link number 3929. When you access the information collection, click on ''Download Attachments'' to view. Written requests for information should be addressed to U.S. Department of Education, 400 Maryland Avenue, SW., LBJ, Washington, DC 20202–4537. Requests may also be electronically mailed to the Internet address *ICDocketMgr@ed.gov* or faxed to 202–401–0920. Please specify the complete title of the information collection when making your request.

Comments regarding burden and/or the collection activity requirements should be electronically mailed to *ICDocketMgr@ed.gov.* Individuals who use a telecommunications device for the deaf (TDD) may call the Federal Information Relay Service (FIRS) at 1–800–877–8339.

[FR Doc. E9–6674 Filed 3–24–09; 8:45 am]

BILLING CODE 4000–01–P

DEPARTMENT OF EDUCATION

Submission for OMB Review; Comment Request

AGENCY: Department of Education.

SUMMARY: The Director, Information Collection Clearance Division, Regulatory Information Management Services, Office of Management invites comments on the submission for OMB review as required by the Paperwork Reduction Act of 1995.

DATES: Interested persons are invited to submit comments on or before April 24, 2009.

ADDRESSES: Written comments should be addressed to the Office of Information and Regulatory Affairs, Attention: Education Desk Officer, Office of Management and Budget, 725 17th Street, NW., Room 10222, New Executive Office Building, Washington, DC 20503 or faxed to (202) 395–6974.

SUPPLEMENTARY INFORMATION: Section 3506 of the Paperwork Reduction Act of 1995 (44 U.S.C. Chapter 35) requires that the Office of Management and Budget (OMB) provide interested Federal agencies and the public an early opportunity to comment on information collection requests. OMB may amend or waive the requirement for public consultation to the extent that public participation in the approval process would defeat the purpose of the information collection, violate State or Federal law, or substantially interfere with any agency's ability to perform its statutory obligations. The Director, Regulatory Information Management Services, Office of Management, publishes that notice containing proposed information collection requests prior to submission of these requests to OMB. Each proposed information collection, grouped by office, contains the following: (1) Type of review requested, *e.g.* new, revision, extension, existing or reinstatement; (2) Title; (3) Summary of the collection; (4) Description of the need for, and proposed use of, the information; (5) Respondents and frequency of collection; and (6) Reporting and/or Recordkeeping burden. OMB invites public comment.

Dated: March 19, 2009.

Angela C. Arrington,

Director, Information Collection Clearance Division,Regulatory Information Management Services,Office of Management.

Office of Elementary and Secondary Education

Type of Review: Revision.

Title: FY 2010 Application for New Grants Under the Indian Education Professional Development Program.

Frequency: Annually.

Affected Public: State, Local, or Tribal Gov't, SEAs or LEAs.

Reporting and Recordkeeping Hour Burden:

Responses: 50.

Burden Hours: 1,685.

Abstract: The Professional Development (CFDA 84.299B) program is a competitive discretionary grant program. The grant applications submitted for this program are evaluated on the basis of how well an applicant addresses the selection criteria, and are used to determine applicant eligibility and amount of award for projects selected for funding.

This information collection is being submitted under the Streamlined Clearance Process for Discretionary Grant Information Collections (1894–0001). Therefore, the 30-day public comment period notice will be the only public comment notice published for this information collection.

Requests for copies of the information collection submission for OMB review may be accessed from *http://edicsweb.ed.gov*, by selecting the ''Browse Pending Collections'' link and by clicking on link number 3995. When you access the information collection, click on ''Download Attachments'' to view. Written requests for information should be addressed to U.S. Department of Education, 400 Maryland Avenue, SW., LBJ, Washington, DC 20202–4537. Requests may also be electronically mailed to the Internet address *ICDocketMgr@ed.gov* or faxed to 202–401–0920. Please specify the complete title of the information collection when making your request.

Comments regarding burden and/or the collection activity requirements should be electronically mailed to *ICDocketMgr@ed.gov.* Individuals who use a telecommunications device for the deaf (TDD) may call the Federal Information Relay Service (FIRS) at 1–800–877–8339

[FR Doc. E9–6685 Filed 3–24–09; 8:45 am]

BILLING CODE 4000–01–P

DEPARTMENT OF ENERGY

Federal Energy Regulatory Commission

[Project No. 2936–006]

City of Rock Island, IL; Notice of Application Accepted for Filing, Soliciting Motions To Intervene and Protests, Ready for Environmental Analysis, and Soliciting Comments, Recommendations, Terms and Conditions, and Fishway Prescriptions

March 18, 2009.

Take notice that the following hydroelectric application has been filed with the Commission and is available for public inspection.

a. *Type of Application:* Amendment of Exemption from Licensing.

b. *Project No.:* 2936–006.

c. *Date filed:* February 4, 2009.

d. *Applicant:* City of Rock Island, Illinois.

e. *Name of Project:* The Sears Hydroelectric Project.

f. *Location:* The project is located on the Rock River, Rock Island, Illinois.

g. *Filed Pursuant to:* Federal Power Act 16 U.S.C. 791a–825r.

h. *Applicant Contact:* Mr. Robert T. Hawes, Director of Public Works, 1309

Mill Street, Rock Island, IL 61201. Tel: (309) 732–2200.

i. *FERC Contact:* Mr. Christopher Chaney, Telephone (202) 502–6778, and e-mail *christopher.chaney@ferc.gov*.

j. Deadline for filing motions to intervene and protests, comments, recommendations, preliminary terms and conditions, and preliminary fishway prescriptions is 60 days from the issuance of this notice; reply comments are due 105 days from the issuance date of this notice. All documents (original and eight copies) should be filed with: Secretary, Federal Energy Regulatory Commission, 888 First Street, NE., Washington, DC 20426.

k. *Description of Request:* The City of Rock Island proposal consists of adding to the authorized exemption two generating units, each having a rated installed capacity of 300 kW and a rated hydraulic capacity of 356 cubic feet per second (cfs). All changes in equipment will be within the existing powerhouse. The Sears powerhouse is a run-of-river operation on the north channel of the Rock River, adjacent to the Sears Dam. With the proposed units the project's installed capacity would increase from 600 kW to 1200 kW and the hydraulic capacity would increase from 730 cfs to 1460 cfs.

l. *Locations of the Application:* A copy of the application is available for inspection and reproduction at the Commission's Public Reference Room, located at 888 First Street, NE., Room 2A, Washington, DC 20426, or by calling (202) 502–8371. This filing may also be viewed on the Commission's Web site at *http://www.ferc.gov* using the ''eLibrary'' link. Enter the docket number excluding the last three digits in the docket number field to access the document. You may also register online at *http://www.ferc.gov/docs-filing/esubscription.asp* to be notified via e-mail of new filings and issuances related to this or other pending projects. For assistance, call 1–866–208–3676 or e-mail *FERCOnlineSupport@ferc.gov*, for TTY, call (202) 502–8659. A copy is also available for inspection and reproduction at the address in item (h) above.

m. Individuals desiring to be included on the Commission's mailing list should so indicate by writing to the Secretary of the Commission.

n. *Comments, Protests, or Motions to Intervene:* Anyone may submit comments, a protest, or a motion to intervene in accordance with the requirements of Rules of Practice and Procedure, 18 CFR 385.210,.211,.214. In determining the appropriate action to take, the Commission will consider all protests or other comments filed, but only those who file a motion to intervene in accordance with the Commission's Rules may become a party to the proceeding. Any comments, protests, or motions to intervene must be received on or before the specified comment date for the particular application.

o. *Filing and Service of Responsive Documents:* All filings must (1) bear in all capital letters the title ''PROTEST'', ''MOTION TO INTERVENE'', ''COMMENTS,'' ''REPLY COMMENTS,'' ''RECOMMENDATIONS,'' '' TERMS AND CONDITIONS,'' or '' FISHWAY PRESCRIPTIONS;'' (2) set forth in the heading the name of the applicant and the project number of the application to which the filing responds; (3) furnish the name, address, and telephone number of the person protesting or intervening; and (4) otherwise comply with the requirements of 18 CFR 385.2001 through 385.2005. All comments, recommendations, terms and conditions or prescriptions must set forth their evidentiary basis and otherwise comply with the requirements of 18 CFR 4.34(b). All comments, recommendations, terms and conditions or prescriptions should relate to project works which are the subject of the license amendment. Agencies may obtain copies of the application directly from the applicant. A copy of any protest or motion to intervene must be served upon each representative of the applicant specified in the particular application. If an intervener files comments or documents with the Commission relating to the merits of an issue that may affect the responsibilities of a particular resource agency, they must also serve a copy of the document on that resource agency. A copy of all other filings in reference to this application must be accompanied by proof of service on all persons listed in the service list prepared by the Commission in this proceeding, in accordance with 18 CFR 4.34(b) and 385.2010.

p. As provided for in 18 CFR 4.34(b)(5)(i), a license applicant must file, no later than 60 days following the date of issuance of this notice of acceptance and ready for environmental analysis: (1) A copy of the water quality certification; (2) a copy of the request for certification, including proof of the date on which the certifying agency received the request; or (3) evidence of waiver of water quality certification.

q. *e-Filing:* Motions to intervene, protests, comments, recommendations, terms and conditions, and fishway prescriptions may be filed electronically via the Internet in lieu of paper. *See*, 18 CFR 385.2001(a)(1)(iii) and the instructions on the Commission's Web site at *http://www.ferc.gov* under the ''e Filing'' link.

Kimberly D. Bose,

Secretary.

[FR Doc. E9–6498 Filed 3–24–09; 8:45 am]

BILLING CODE

DEPARTMENT OF ENERGY

Federal Energy Regulatory Commission

[Project No. 2655–000]

Eagle & Phenix Hydro Company, Inc; Notice of Authorization for Continued Project Operation

March 18, 2009.

On February 26, 2009, Eagle & Phenix Hydro Company, Inc., licensee for the Eagle and Phenix Hydroelectric Project, filed a Notice of Intent to file an Application for Surrender of License for the Project. The Eagle & Phenix Hydroelectric Project is located on the Chattahoochee River in Muscogee County, Georgia and Russell County, Alabama.

The license for Project No. 2655 was issued for a period ending February 28, 2009. Section 15(a)(1) of the FPA, 16 U.S.C. 808(a)(1), requires the Commission, at the expiration of a license term, to issue from year-to-year an annual license to the then licensee under the terms and conditions of the prior license until a new license is issued, or the project is otherwise disposed of as provided in section 15 or any other applicable section of the FPA. If the project's prior license waived the applicability of section 15 of the FPA, then, based on section 9(b) of the Administrative Procedure Act, 5 U.S.C. 558(c), and as set forth at 18 CFR 16.21(a), if the licensee of such project has filed an application for a subsequent license, the licensee may continue to operate the project in accordance with the terms and conditions of the license after the minor or minor part license expires, until the Commission acts on its application. If the licensee of such a project has not filed an application for a subsequent license, then it may be required, pursuant to 18 CFR 16.21(b), to continue project operations until the Commission issues someone else a license for the project or otherwise orders disposition of the project.

If the project is subject to section 15 of the FPA, notice is hereby given that an annual license for Project No. 2655 is issued to Eagle & Phenix Hydro Company, Inc for a period effective March 1, 2009 through February 28,

2010, or until the issuance of a new license for the project or other disposition under the FPA, whichever comes first. If issuance of a new license (or other disposition) does not take place on or before February 28, 2010, notice is hereby given that, pursuant to 18 CFR 16.18(c), an annual license under section 15(a)(1) of the FPA is renewed automatically without further order or notice by the Commission, unless the Commission orders otherwise. If the project is not subject to section 15 of the FPA, notice is hereby given that the Eagle & Phenix Hydro Company, Inc is authorized to continue operation of the Eagle & Phenix Hydroelectric Project, until such time as the Commission takes final action on any application for Surrender of License that may be filed.

Kimberly D. Bose,

Secretary.

[FR Doc. E9–6497 Filed 3–24–09; 8:45 am]

BILLING CODE

DEPARTMENT OF ENERGY

Federal Energy Regulatory Commission

[Docket No. EL09–41–000]

York Generation Company LLC, Complainant v. PJM Interconnection, LLC, Respondent Notice of Complaint

March 18, 2009.

Take notice that on March 17, 2009, pursuant to section 206 of the Rules and Practice and Procedure of the Federal Energy Regulatory Commission (Commission), 18 CFR 385.206 (2008), York Generation Company LLC (Complainant) filed a formal complaint against PJM Interconnection, LLC. (Respondent) alleging that it is unjust and unreasonable for the Respondent to require the Complainant to upgrade an existing substation in accordance with FirstEnergy's Requirement for Transmission Connected Facilities standard as a condition to restoring 10MW of Capacity Interconnection Rights previously granted to the 52.3 MW (nameplate) generating facility owned by the Complainant.

The Complainant certifies that copies of the complaint were served simultaneously with its filing on the contacts for the Respondent on the Commission's list of Corporate Officials.

Any person desiring to intervene or to protest this filing must file in accordance with Rules 211 and 214 of the Commission's Rules of Practice and Procedure (18 CFR 385.211, 385.214). Protests will be considered by the Commission in determining the appropriate action to be taken, but will not serve to make protestants parties to the proceeding. Any person wishing to become a party must file a notice of intervention or motion to intervene, as appropriate. The Respondent's answer and all interventions, or protests must be filed on or before the comment date. The Respondent's answer, motions to intervene, and protests must be served on the Complainants.

The Commission encourages electronic submission of protests and interventions in lieu of paper using the ''eFiling'' link at *http://www.ferc.gov.* Persons unable to file electronically should submit an original and 14 copies of the protest or intervention to the Federal Energy Regulatory Commission, 888 First Street, NE., Washington, DC 20426.

This filing is accessible on-line at *http://www.ferc.gov,* using the ''eLibrary'' link and is available for review in the Commission's Public Reference Room in Washington, DC. There is an ''eSubscription'' link on the Web site that enables subscribers to receive e-mail notification when a document is added to a subscribed docket(s). For assistance with any FERC Online service, please e-mail *FERCOnlineSupport@ferc.gov,* or call (866) 208–3676 (toll free). For TTY, call (202) 502–8659.

Comment Date: 5 pm Eastern Time on April 6, 2009.

Kimberly D. Bose,

Secretary.

[FR Doc. E9–6493 Filed 3–24–09; 8:45 am]

BILLING CODE

DEPARTMENT OF ENERGY

Federal Energy Regulatory Commission

[Docket No. PR09–18–000]

New Mexico Gas Company, Inc.; Notice of Filing

March 18, 2009.

Take notice that on March 2, 2009, New Mexico Gas Company, Inc. (NMGC) filed pursuant to section 284.123(e) of the Commission's regulations, a Statement of Operating Conditions (SOC). NMGC states that Ordering Paragraph G of the Commission's August 28, 2008 order issuing limited certificates to NMGC required NMGC to file its SOC within 30 days of commencement of service. 124 FERC ¶ 61,194 (2008). NMGC states it notified the Commission that service commenced as of January 30, 2009.

Any person desiring to participate in this rate proceeding must file a motion to intervene or to protest this filing must file in accordance with Rules 211 and 214 of the Commission's Rules of Practice and Procedure (18 CFR 385.211 and 385.214). Protests will be considered by the Commission in determining the appropriate action to be taken, but will not serve to make protestants parties to the proceeding. Any person wishing to become a party must file a notice of intervention or motion to intervene, as appropriate. Such notices, motions, or protests must be filed on or before the date as indicated below. Anyone filing an intervention or protest must serve a copy of that document on the Applicant. Anyone filing an intervention or protest on or before the intervention or protest date need not serve motions to intervene or protests on persons other than the Applicant.

The Commission encourages electronic submission of protests and interventions in lieu of paper using the ''eFiling'' link at *http://www.ferc.gov*. Persons unable to file electronically should submit an original and 14 copies of the protest or intervention to the Federal Energy Regulatory Commission, 888 First Street, NE., Washington, DC 20426.

This filing is accessible on-line at *http://www.ferc.gov*, using the ''eLibrary'' link and is available for review in the Commission's Public Reference Room in Washington, DC. There is an ''eSubscription'' link on the Web site that enables subscribers to receive e-mail notification when a document is added to a subscribed docket(s). For assistance with any FERC Online service, please e-mail *FERCOnlineSupport@ferc.gov*, or call (866) 208–3676 (toll free). For TTY, call (202) 502–8659.

Comment Date: 5 p.m. Eastern Time Monday, March 30, 2009.

Kimberly D. Bose,

Secretary.

[FR Doc. E9–6492 Filed 3–24–09; 8:45 am]

BILLING CODE

DEPARTMENT OF ENERGY

Federal Energy Regulatory Commission

[Docket No. ER09–838–000]

Entegra Power Services LLC; Supplemental Notice That Initial Market-Based Rate Filing Includes Request for Blanket Section 204 Authorization

March 18, 2009.

This is a supplemental notice in the above-referenced proceeding of Entegra Power Services LLC's application for market-based rate authority, with an accompanying rate tariff, noting that such application includes a request for blanket authorization, under 18 CFR Part 34, of future issuances of securities and assumptions of liability.

Any person desiring to intervene or to protest should file with the Federal Energy Regulatory Commission, 888 First Street, NE., Washington, DC, 20426, in accordance with Rules 211 and 214 of the Commission's Rules of Practice and Procedure (18 CFR 385.211 and § 385.214). Anyone filing a motion to intervene or protest must serve a copy of that document on the Applicant.

Notice is hereby given that the deadline for filing protests with regard to the applicant's request for blanket authorization, under 18 CFR Part 34, of future issuances of securities and assumptions of liability, is April 7, 2009.

The Commission encourages electronic submission of protests and interventions in lieu of paper, using the FERC Online links at *http://www.ferc.gov.* To facilitate electronic service, persons with Internet access who will eFile a document and/or be listed as a contact for an intervenor must create and validate an eRegistration account using the eRegistration link. Select the eFiling link to log on and submit the intervention or protests.

Persons unable to file electronically should submit an original and 14 copies of the intervention or protest to the Federal Energy Regulatory Commission, 888 First St, NE., Washington, DC, 20426.

The filings in the above-referenced proceeding are accessible in the Commission's eLibrary system by clicking on the appropriate link in the above list. They are also available for review in the Commission's Public Reference Room in Washington, DC. There is an eSubscription link on the Web site that enables subscribers to receive e-mail notification when a document is added to a subscribed dockets(s). For assistance with any FERC Online service, please e-mail *FERCOnlineSupport@ferc.gov.* or call (866) 208–3676 (toll free). For TTY, call (202) 502–8659.

Kimberly D. Bose,

Secretary.

[FR Doc. E9–6496 Filed 3–24–09; 8:45 am]

BILLING CODE

DEPARTMENT OF ENERGY

Federal Energy Regulatory Commission

[Docket No. ER09–826–000]

Michigan Waste Energy, Inc.; Supplemental Notice That Initial Market-Based Rate Filing Includes Request for Blanket Section 204 Authorization

March 18, 2009.

This is a supplemental notice in the above-referenced proceeding of Michigan Waste Energy, Inc.'s application for market-based rate authority, with an accompanying rate tariff, noting that such application includes a request for blanket authorization, under 18 CFR Part 34, of future issuances of securities and assumptions of liability.

Any person desiring to intervene or to protest should file with the Federal Energy Regulatory Commission, 888 First Street, NE., Washington, DC, 20426, in accordance with Rules 211 and 214 of the Commission's Rules of Practice and Procedure (18 CFR 385.211 and § 385.214). Anyone filing a motion to intervene or protest must serve a copy of that document on the Applicant.

Notice is hereby given that the deadline for filing protests with regard to the applicant's request for blanket authorization, under 18 CFR Part 34, of future issuances of securities and assumptions of liability, is April 7, 2009.

The Commission encourages electronic submission of protests and interventions in lieu of paper, using the FERC Online links at *http://www.ferc.gov.* To facilitate electronic service, persons with Internet access who will eFile a document and/or be listed as a contact for an intervenor must create and validate an eRegistration account using the eRegistration link. Select the eFiling link to log on and submit the intervention or protests.

Persons unable to file electronically should submit an original and 14 copies of the intervention or protest to the Federal Energy Regulatory Commission, 888 First St., NE., Washington, DC, 20426.

The filings in the above-referenced proceeding are accessible in the Commission's eLibrary system by clicking on the appropriate link in the above list. They are also available for review in the Commission's Public Reference Room in Washington, DC. There is an eSubscription link on the Web site that enables subscribers to receive e-mail notification when a document is added to a subscribed dockets(s). For assistance with any FERC Online service, please e-mail *FERCOnlineSupport@ferc.gov.* or call (866) 208–3676 (toll free). For TTY, call (202) 502–8659.

Kimberly D. Bose,

Secretary.

[FR Doc. E9–6495 Filed 3–24–09; 8:45 am]

BILLING CODE

DEPARTMENT OF ENERGY

Federal Energy Regulatory Commission

[Docket No. ER09–805–000]

Quntum Energy LLC; Supplemental Notice That Initial Market-Based Rate Filing Includes Request for Blanket Section 204 Authorization

March 18, 2009.

This is a supplemental notice in the above-referenced proceeding of Quntum Energy LLC's application for market-based rate authority, with an accompanying rate tariff, noting that such application includes a request for blanket authorization, under 18 CFR Part 34, of future issuances of securities and assumptions of liability.

Any person desiring to intervene or to protest should file with the Federal Energy Regulatory Commission, 888 First Street, NE., Washington, DC, 20426, in accordance with Rules 211 and 214 of the Commission's Rules of Practice and Procedure (18 CFR 385.211 and § 385.214). Anyone filing a motion to intervene or protest must serve a copy of that document on the Applicant.

Notice is hereby given that the deadline for filing protests with regard to the applicant's request for blanket authorization, under 18 CFR Part 34, of future issuances of securities and assumptions of liability, is April 7, 2009.

The Commission encourages electronic submission of protests and interventions in lieu of paper, using the FERC Online links at *http://www.ferc.gov.* To facilitate electronic service, persons with Internet access

who will eFile a document and/or be listed as a contact for an intervenor must create and validate an eRegistration account using the eRegistration link. Select the eFiling link to log on and submit the intervention or protests.

Persons unable to file electronically should submit an original and 14 copies of the intervention or protest to the Federal Energy Regulatory Commission, 888 First St. NE., Washington, DC, 20426.

The filings in the above-referenced proceeding are accessible in the Commission's eLibrary system by clicking on the appropriate link in the above list. They are also available for review in the Commission's Public Reference Room in Washington, DC. There is an eSubscription link on the Web site that enables subscribers to receive e-mail notification when a document is added to a subscribed docket(s). For assistance with any FERC Online service, please e-mail *FERCOnlineSupport@ferc.gov* or call (866) 208–3676 (toll free). For TTY, call (202) 502–8659.

Kimberly D. Bose,

Secretary.

[FR Doc. E9–6494 Filed 3–24–09; 8:45 am]

BILLING CODE

DEPARTMENT OF ENERGY

Federal Energy Regulatory Commission

[Docket No. PR09–17–000]

Humble Gas Pipeline Company; Notice of Petition for Rate Approval

March 18, 2009.

Take notice that on February 27, 2009, Humble Gas Pipeline Company (HGPC) filed pursuant to section 284.123(b)(2) of the Commission's regulations, a petition requesting approval of rates pursuant to section 311(a)(2) of the Natural Gas Policy Act. HGPC seeks approval of a maximum usage rate of $0.06546 per MMBtu for gas transported on HGPC's Inlet System and a maximum usage rate of $0.0476 per MMBtu for gas transported on HGPC's Header System. Further, HGPC requests each of the two transportation services be subject to a 0.54% retainage for fuel and lost/unaccounted-for gas.

Any person desiring to participate in this rate proceeding must file a motion to intervene or to protest this filing must file in accordance with Rules 211 and 214 of the Commission's Rules of Practice and Procedure (18 CFR 385.211 and 385.214). Protests will be considered by the Commission in determining the appropriate action to be taken, but will not serve to make protestants parties to the proceeding. Any person wishing to become a party must file a notice of intervention or motion to intervene, as appropriate. Such notices, motions, or protests must be filed on or before the date as indicated below. Anyone filing an intervention or protest must serve a copy of that document on the Applicant. Anyone filing an intervention or protest on or before the intervention or protest date need not serve motions to intervene or protests on persons other than the Applicant.

The Commission encourages electronic submission of protests and interventions in lieu of paper using the ''eFiling'' link at *http://www.ferc.gov.* Persons unable to file electronically should submit an original and 14 copies of the protest or intervention to the Federal Energy Regulatory Commission, 888 First Street, NE., Washington, DC 20426.

This filing is accessible on-line at *http://www.ferc.gov*, using the ''eLibrary'' link and is available for review in the Commission's Public Reference Room in Washington, DC. There is an ''eSubscription'' link on the Web site that enables subscribers to receive e-mail notification when a document is added to a subscribed docket(s). For assistance with any FERC Online service, please e-mail *FERCOnlineSupport@ferc.gov*, or call (866) 208–3676 (toll free). For TTY, call (202) 502–8659.

Comment Date: 5 p.m. Eastern Time Friday, March 27, 2009.

Kimberly D. Bose,

Secretary.

[FR Doc. E9–6500 Filed 3–24–09; 8:45 am]

BILLING CODE

DEPARTMENT OF ENERGY

Federal Energy Regulatory Commission

[Docket No. CP09–78–000]

ANR Pipeline Company; Notice of Request Under Blanket Authorization

March 18, 2009.

Take notice that on March 11, 2009, ANR Pipeline Company (ANR), 717 Texas Street, Houston, Texas 77002, filed in Docket No. CP09–78–000, an application, pursuant to sections 157.205 and 157.208(b) of the Commission's Regulations under the Natural Gas Act (NGA) as amended, to reconfigure compressor operations and natural gas flow at its Eunice compressor station in Acadia Parish, Louisiana, under ANR's blanket certificate issued in Docket No. CP82–480–000,[1] all as more fully set forth in the application which is on file with the Commission and open to the public for inspection.

ANR proposes to enhance operations at the Eunice compressor station by altering station piping to make Eunice bi-directional and by reconfiguring two 12,000 horsepower compressor units to permit operations under low-flow conditions. ANR states that its proposed reconfiguration of the Eunice compressor station would allow ANR to provide incremental firm backhaul transportation service to customers in ANR's Southeast markets. ANR also states that the proposed reconfiguration would allow for an additional mode of operation while retaining existing capabilities. ANR refers to this project as the Southeast Backhaul Expansion Project. Finally, ANR states that it would cost approximately $17,200,000 to reconfigure the Eunice compressor station.

Any questions concerning this application may be directed to Dean Ferguson, Vice President, Marketing and Business Development, ANR Pipeline Company, 717 Texas Street, Houston, Texas 77002, telephone at (832) 320–5503, facsimile at (832) 320–6503, or via e-mail: *dean_ferguson@transcanada.com* .

This filing is available for review at the Commission or may be viewed on the Commission's Web site at *http://www.ferc.gov,* using the ''eLibrary'' link. Enter the docket number excluding the last three digits in the docket number filed to access the document. For assistance, please contact FERC Online Support at FERC *OnlineSupport@ferc.gov* or call toll-free at (866) 206–3676, or, for TTY, contact (202) 502–8659. Comments, protests and interventions may be filed electronically via the Internet in lieu of paper. See, 18 CFR 385.2001(a)(1)(iii) and the instructions on the Commission's Web site under the ''e-Filing'' link. The Commission strongly encourages intervenors to file electronically.

Any person or the Commission's staff may, within 60 days after issuance of the instant notice by the Commission, file pursuant to Rule 214 of the Commission's Procedural Rules (18 CFR 385.214) a motion to intervene or notice of intervention and pursuant to section 157.205 of the regulations under the NGA (18 CFR 157.205), a protest to the request. If no protest is filed within the

[1] 20 FERC ¶ 62,595 (1982).

time allowed therefore, the proposed activity shall be deemed to be authorized effective the day after the time allowed for filing a protest. If a protest is filed and not withdrawn within 30 days after the allowed time for filing a protest, the instant request shall be treated as an application for authorization pursuant to section 7 of the NGA.

Kimberly D. Bose,

Secretary.

[FR Doc. E9–6501 Filed 3–24–09; 8:45 am]

BILLING CODE

DEPARTMENT OF ENERGY

Federal Energy Regulatory Commission

[Docket Nos. PR08–30–000, PR07–12–003, and PR07–12–004]

Enterprise Texas Pipeline LLC; Notice of Technical Conference

March 18, 2009.

Take notice that the Commission will convene a technical conference in the above-captioned proceeding on Tuesday, April 14, 2009, at 10 a.m. (EDT), in a room to be designated at the offices of the Federal Energy Regulatory Commission (Commission), 888 First Street, NE., Washington, DC. 20426.

The Commission's February 27, 2009 Order in the above-captioned proceeding,[1] directed that a technical conference be held to discuss Enterprise Texas Pipeline LLC's (Enterprise Texas) proposed incremental rates for firm and interruptible transportation services and the issues raised with respect to the Statement of Operating Conditions. At the conference, Commission Staff and interested persons will have the opportunity to discuss all of the issues raised by Enterprise Texas's filing including, but not limited to, technical, engineering and operational issues; rate and cost issues; and any issues raised in the protests and data requests. Enterprise Texas should be prepared to address all the concerns raised in the protests, to discuss answers to the data requests, to discuss technical, engineering and operational issues, to discuss rate and cost issues, and to provide, as necessary, additional support for its filing.

FERC conferences are accessible under section 508 of the Rehabilitation Act of 1973. For accessibility accommodations please send an e-mail to *accessibility@ferc.gov* or call toll free (866) 208–3372 (voice) or 202–502–8659 (TTY), or send a fax to 202–208–2106 with the required accommodations.

All interested parties and staff are permitted to attend. For further information please contact Rita Johnson at (202) 502–6518 or e-mail at *Rita.Johnson@FERC.gov.*

Kimberly D. Bose,

Secretary.

[FR Doc. E9–6499 Filed 3–24–09; 8:45 am]

BILLING CODE

[1] *Enterprise Texas Pipeline LLC,* 126 FERC ¶ 61,183 (2009).

ENVIRONMENTAL PROTECTION AGENCY

[FRL–8775–8]

Notice of Availability for the U.S. Environmental Protection Agency's Strategic Plan for Evaluating the Toxicity of Chemicals

AGENCY: Environmental Protection Agency (EPA).

ACTION: Notice of document availability.

SUMMARY: The U.S. Environmental Protection Agency (EPA) is announcing the availability of the final document *The U.S. Environmental Protection Agency's Strategic Plan for Evaluating the Toxicity of Chemicals* (EPA 100/K–09/001). The purpose of the Strategic Plan is to serve as a blueprint for EPA in incorporating advances in molecular biology and computational sciences into toxicity testing and risk assessment practices across the Agency. The Strategic Plan is centered on three interrelated components: (1) Toxicity pathways identification and use of this information in screening and prioritization of chemicals for further testing, (2) the use of toxicity pathways information in risk assessment, and (3) the institutional transition necessary to implement such practices across EPA. This Strategic Plan describes an ambitious and substantive improvement in the efficiency and effectiveness of the process by which environmental pollutants are evaluated for toxicity and risk. A workgroup of EPA's Science Policy Council oversaw the development of this document, incorporating input obtained from an external peer review.

ADDRESSES: The final document is available electronically through the EPA Office of the Science Advisor's Web site at: *http://www.epa.gov/osa/spc/toxicitytesting/*. A limited number of paper copies will be available from EPA's National Service Center for Environmental Publications (NSCEP), P.O. Box 42419, Cincinnati, OH 45242; telephone 1–800–490–9198 or 513–489–8190; facsimile 301–604–3408; e-mail *NSCEP@bps-lmit.com*. Please provide your name and mailing addresses and the title and EPA number (as given above) of the requested publication.

FOR FURTHER INFORMATION CONTACT: Melissa Kramer, Office of the Science Advisor, Mail Code 8105R, Environmental Protection Agency, 1200 Pennsylvania Avenue, NW., Washington, DC 20460; *telephone number:* (202) 564–8497; *fax number:* (202) 564–2070, *e-mail: kramer.melissa@epa.gov.*

SUPPLEMENTARY INFORMATION: EPA recently took the lead in commissioning the National Research Council (NRC) of the National Academies to develop a long-range vision for toxicity testing and risk assessment. Their 2007 report, *Toxicity Testing in the 21st Century: A Vision and a Strategy* (*http://www.nap.edu/catalog.php?record_id=11970*), envisions a landmark transformation that focuses on identifying and evaluating ''toxicity pathways,'' *i.e.*, cellular response pathways responsible for adverse health effects when sufficiently perturbed by environmental agents under realistic exposure conditions.

To build upon the transformative changes advocated in the NRC document, while ensuring an internally coordinated and integrated approach, EPA established a cross-Agency workgroup under the auspices of its internal Science Policy Council. This workgroup produced *The U.S. Environmental Protection Agency's Strategic Plan for Evaluating the Toxicity of Chemicals* that provides a framework for EPA to comprehensively move forward to incorporate this new scientific paradigm into future toxicity testing and risk assessment practices.

This new paradigm has the potential to address increasingly complex issues that EPA faces in evaluating environmental contaminants for risks to human health and the environment. For example, it is expected to create more efficient and cost-effective means to screen and prioritize for further assessment the tens of thousands of chemicals that are already found in the environment. The new paradigm should facilitate evaluating the susceptibility of different life-stages and genetic variations in the population, understanding the mechanisms by which toxicity occurs, and considering the risks of concurrent, cumulative exposure to multiple and diverse chemicals, while at the same time significantly reducing reliance on animal testing for assessing human risk.

Dated: February 18, 2009.

Kevin Y. Teichman,

Acting EPA Science Advisor.

[FR Doc. E9–6683 Filed 3–24–09; 8:45 am]

BILLING CODE 6560–50–P

ENVIRONMENTAL PROTECTION AGENCY

[FRL–8781–3]

Clean Water Act Section 303(d): Availability of List Decisions

AGENCY: Environmental Protection Agency (EPA).

ACTION: Notice of Availability and Request for Public Comment.

SUMMARY: This action announces the availability of EPA's proposed decision identifying water quality limited segments and associated pollutants in Idaho to be listed pursuant to Clean Water Act section 303(d)(2), and requests public comment. Section 303(d)(2) requires that states submit and EPA approve or disapprove lists of waters for which existing technology-based pollution controls are not stringent enough to attain or maintain state water quality standards and for which total maximum daily loads (TMDLs) must be prepared.

EPA is providing the public the opportunity to review its proposed decision to add the following 2 waters, and their associated pollutants to Idaho's 2008 section 303(d) list: the Boise River from Indian Creek to the mouth for nutrients (AU:ID17050114SW001_06) and Hem Creek for temperature (AU:ID17060307CL007_02b). EPA will consider and respond to public comments in reaching its final decision on the addition of the 2 referenced water bodies and pollutants identified for inclusion on Idaho's 2008 303(d) list.

DATES: Comments must be submitted to EPA within 30 days of the publication of this notice.

ADDRESSES: Comments on the proposed decision to add the two waters should be sent to Jill Gable, 303(d) Listing Assistant, Office of Water and Watersheds; USEPA Region 10; 1200 6th Ave., Suite 900, OWW–134; Seattle, WA 98101; telephone (206) 553–2582, facsimile (206) 553–0165, e-mail *gable.jill@epa.gov.* Oral comments will not be considered. Copies of the proposed decision concerning Idaho's 303(d) list which explain the rationale for EPA's proposed decision can be obtained at EPA Region 10's Web site at: *http://yosemite.epa.gov/r10/water.nsf/tmdls/ID303disapproval*, or by writing or calling Ms. Gable at the above address. Underlying documentation for the proposed decision to add these waters is available for public inspection at the above address and also available at EPA Region 10—Boise Operations Office, 1435 N Orchard St., Boise, ID 83706.

FOR FURTHER INFORMATION CONTACT: Jill Gable at (206) 553–2582 or *gable.jill@epa.gov.*

SUPPLEMENTARY INFORMATION: Section 303(d) of the Clean Water Act (CWA) requires that each state identify those waters for which existing technology-based pollution controls are not stringent enough to attain or maintain state water quality standards. For those waters, states are required to establish TMDLs according to a priority ranking.

EPA's Water Quality Planning and Management regulations include requirements related to the implementation of Section 303(d) of the CWA (40 CFR 130.7). The regulations require states to identify water quality limited waters still requiring TMDLs every two years. The lists of waters still needing TMDLs must also include priority rankings and must identify the waters targeted for TMDL development during the next two years (40 CFR 130.7). On March 31, 2000, EPA promulgated a revision to this regulation that waived the requirement for states to submit Section 303(d) lists in 2000 except in cases where a court order, consent decree, or settlement agreement required EPA to take action on a list in 2000 (65 FR 17170).

Consistent with EPA's regulations, Idaho submitted to EPA its listing decisions under Section 303(d)(2) in July 2008. On February 4, 2009, EPA partially approved and partially disapproved Idaho's 2008 303(d) list of impaired waters and associated pollutants. EPA partially approved Idaho's listing of 929 waterbodies still requiring TMDLS but disapproved Idaho's decision to not list two water quality limited segments and associated pollutants: The Boise River from Indian Creek to the mouth for nutrients (AU:ID17050114SW001_06) and Hem Creek for temperature (AU:ID17060307CL007_02b). EPA identified these additional waterbodies and pollutants for inclusion on the State's 2008 section 303(d) list. EPA solicits public comment on its identification of these additional waters and associated pollutants for inclusion on Idaho's 2008 Section 303(d) list.

Dated: March 5, 2009.

Michael A. Bussell,

Director, Water Division, EPA Region X.

[FR Doc. E9–6605 Filed 3–24–09; 8:45 am]

BILLING CODE 6560–50–P

ENVIRONMENTAL PROTECTION AGENCY

[EPA–R01–OW–2008–0919; FRL–8781–9]

Maine Marine Sanitation Device Standard—Notice of Determination

AGENCY: Environmental Protection Agency (EPA).

ACTION: Notice of Determination.

SUMMARY: The Regional Administrator of the Environmental Protection Agency—New England Region, has determined that adequate facilities for the safe and sanitary removal and treatment of sewage from all vessels are reasonably available for the waters of Boothbay Harbor.

ADDRESSES: *Docket:* All documents in the docket are listed in the *http://www.regulations.gov* index. Although listed in the index, some information is not publicly available, e.g., CBI or other information whose disclosure is restricted by statute. Certain other material, such as copyrighted material, will be publicly available only in hard copy. Publicly available docket materials are available electronically in *http://www.regulations.gov.*

FOR FURTHER INFORMATION CONTACT: Ann Rodney, U.S. Environmental Protection Agency—New England Region, One Congress Street, Suite 1100, COP, Boston, MA 02114–2023. *Telephone:* (617) 918–0538. *Fax number:* (617) 918–1505. *E-mail address: rodney.ann@epa.gov.*

SUPPLEMENTARY INFORMATION:

On January 5, 2009, EPA published a notice that the state of Maine had petitioned the Regional Administrator, Environmental Protection Agency, to determine that adequate facilities for the safe and sanitary removal and treatment of sewage from all vessels are reasonably available for the waters of Boothbay Harbor. One comment was received on this petition. The response to comments can be obtained utilizing the above contact information.

The petition was filed pursuant to Section 312(f)(3) of Public Law 92–500, as amended by Public Laws 95–217 and 100–4, for the purpose of declaring these waters a No Discharge Area (NDA).

Section 312 (f) (3) states: After the effective date of the initial standards and regulations promulgated under this

section, if any State determines that the protection and enhancement of the quality of some or all of the waters within such State require greater environmental protection, such State may completely prohibit the discharge from all vessels of any sewage, whether treated or not, into such waters, except that no such prohibition shall apply until the Administrator determines that adequate facilities for the safe and sanitary removal and treatment of sewage from all vessels are reasonably available for such water to which such prohibition would apply.

This Notice of Determination is for the waters of Boothbay Harbor. The NDA boundaries are as follows:

Waterbody/general area	Longitude	Latitude
From the USCG navigational buoy green bell ''1C'' off the light station ''The Cuckholds'' north to ''Cape Newagen''.	69°39′38.57″ W	43°47′8.75″ N
North to ''Cameron Point'' on the northwest end of ''Townsend Gut''	69°40′5.32″ W	43°51′4.21″ N
North to the southern tip of ''Indiantown Island''	69°40′4.75″ W	43°51′19.4″ N
North to the northern end of ''Indiantown Island''	69°40′3.45″ W	43°51′57.73″ N
East to the head of navigation of unnamed stream	69°38′9.31″ W	43°51′17.33″ N
East to the head of navigation of unnamed stream	69°37′24.62″ W	43°51′8.04″ N
East to the head of navigation of unnamed stream	69°36′50.93″ W	43°51′4.99″ N
East to the northern end of ''Linekin Bay''	69°35′26.86″ W	43°51′42.94″ N
South to the western point of ''Ocean Point''	69°36′16.39″ W	43°48′50.14″ N
Southwest in a straight line to USCG navigational buoy green bell ''1C'' off the light station ''The Cuckholds''.	69°39′0.09″ W	43°46′22.55″ N

The proposed NDA includes the municipal waters of Boothbay Harbor.

The information submitted to EPA by the state of Maine certifies that there are six pumpout facilities located within this area. A list of the facilities, with phone numbers, locations, and hours of operation is appended at the end of this determination.

Based on the examination of the petition, and its supporting documentation, EPA has determined that adequate facilities for the safe and sanitary removal and treatment of sewage from all vessels are reasonably available for the area covered under this determination.

This determination is made pursuant to Section 312(f)(3) of Public Law 92–500, as amended by Public laws 95–217 and 100–4.

PUMPOUT FACILITIES WITHIN PROPOSED NO DISCHARGE AREA—BOOTHBAY HARBOR

Name	Location	Contact info.	Hours	Mean low water depth
Harbormaster	Boothbay Harbor	207–633–3671 VHF 16	6 a.m.–8 p.m.	N/A.
Carousel Marina	Boothbay Harbor	207–633–2922 VHF 9	8 a.m.–5 p.m., 7days	10 ft .
Brown's Wharf	Boothbay Harbor	207–633–5440 VHF 9	8 a.m.–5 p.m., 7 days	15 ft.
Cap'n Fish's Marina	Boothbay Harbor	207–633–3244 VHF 9	8 a.m.–5 p.m., 7 days	15 ft.
Tugboat Inn and Marina	Boothbay Harbor	207–633–4434 VHF 9	10 a.m.–2 p.m., 7 days	8 ft.
Signal Point Marina	Boothbay Harbor	207–633–6920	24/7 Self Service	8 ft.

Dated: March 5, 2009.

Ira W. Leighton,

Acting Regional Administrator, New England Region.

[FR Doc. E9–6665 Filed 3–24–09; 8:45 am]

BILLING CODE 6560–50–P

ENVIRONMENTAL PROTECTION AGENCY

[FRL–8780–6]

Draft National Pollutant Discharge Elimination System (NPDES) General Permit for Discharges From Horse, Cattle and Dairy Cows, Swine, Poultry, and Veal Calf Concentrated Animal Feeding Operations (CAFOs) in Oklahoma (Except Indian Country)

AGENCY: Environmental Protection Agency (EPA).

ACTION: Notice of proposed permit issuance.

SUMMARY: EPA Region 6 Water Quality Protection Division, today is proposing for public comment the issuance of a National Pollutant Discharge Elimination System general permit for discharges from eligible owners/operators of existing concentrated animal feeding operations (CAFOs), in Oklahoma, except those discharges on Indian Country. CAFOs discharging on Indian Country would be required to apply for an individual permit.

All currently operating animal feeding operations that are defined as CAFOs or designated as CAFOs by the permitting authority (See Part VII Definitions, ''CAFOs'') and that are subject to 40 CFR Part 412, Subpart A (Horses), Subpart C (Dairy Cows and Cattle Other than Veal Calves), and Subpart D (Swine, Poultry, and Veal Calves) are eligible for coverage under this permit. Hereinafter, this NPDES general permit will be referred to as ''permit'' or ''CAFO permit'' or ''CAFO general permit.'' Eligible CAFOs may apply for authorization under the terms and conditions of this permit, by submitting a notice of intent (NOI) to be covered by this permit. This permit covers animal feeding operations listed above which meet the definition of a CAFO and discharge or propose to discharge pollutants to waters of the United States. A CAFO proposes to discharge if it is designed, constructed, operated, or maintained such that a discharge will occur.

To determine whether your facility is regulated by this action, you should carefully examine the definition of ''concentrated animal feeding operation'' in existing EPA regulations at 40 CFR 122.23. (also found in Part VII of the draft permit). If you have questions regarding the applicability of this action to a particular entity, consult the person listed for technical information in the preceding **FOR FURTHER INFORMATION CONTACT** section.

This permit was originally issued in the **Federal Register** at 58 FR 7610 with an effective date of March 10, 1993, and an expiration date of March 10, 1998. Applicable requirements from that 1993 permit are continued in the proposed

permit. The proposed permit adds additional requirements contained in revised CAFO regulations at 40 CFR 122 and 412 which were published in the **Federal Register** at 73 FR 70,418 (November 20, 2008).

The permit adds new requirements relating to Nutrient Management Plans (NMPs) for permitted CAFOs. CAFO operators were required to develop and implement NMPs under the 2003 rule; the 2008 rule requires CAFOs to submit the NMPs along with their notice of intent (NOI). EPA Region 6 as the permitting authority will review the NMPs submitted along with the NOIs and will also establish the terms of the NMP that are enforceable elements of the permit. The region will provide the public with an opportunity for meaningful review and comment on the NMPs and the terms of the NMPs will be incorporated into the permit.

DATES: Comments must be submitted in writing to EPA on or before April 24, 2009.

Proposed Documents: The proposed general permit and fact sheet which sets forth principal facts and the significant factual, legal, and policy questions considered in the development of the proposed general permit, may both be obtained via the Internet at *http://www.epa.gov/region6/water/npdes/cafo/index.htm*. To obtain hard copies of these documents or any other information in the administrative record, please contact Ms. Diane Smith using the contact information provided below.

How Do I Comment on This Proposal?

Comment Submittals: Submit your comments, by one of the following methods:

- *E-mail: smith.diane@epa.gov*.
- *Mail:* Ms. Diane Smith, Environmental Protection Agency, Water Quality Protection Division (6WQ–NP), 1445 Ross Ave., Suite 1200, Dallas, TX 75202.
- *Hand Delivery:* EPA Region 6, 7th Floor Reception Desk, 1445 Ross Ave., Suite 1200, Dallas, TX 75202. Such deliveries are only accepted during normal business hours.

For Technical Information Contact: Scott Stine, NPDES Permits and TMDL Branch (6WQ–PP), Environmental Protection Agency, 1445 Ross Ave., Suite 1200, Dallas, TX 75202; *telephone number:* (214) 665–7182; *fax number:* (214) 665–2191; *e-mail address: stine.scott@epa.gov*.

Administrative Record: All documents and references used in the development of this permit are part of the Administrative Record for this permit. Although listed in the index, some information is not publicly available, *e.g.*, CBI or other information whose disclosure is restricted by statute. Certain other material, such as copyrighted material, will be publicly available only in hard copy. Publicly available materials are available either electronically or in hard copy from Ms. Diane Smith at the address above. The Administrative Record may also be viewed at the EPA Region 6 Offices from 8:30 a.m. to 4:30 p.m., Monday through Friday, excluding legal holidays. For more information on scheduling a time to view the Record or to obtain copies of available documents, please contact Ms. Diane Smith at 214–665–2145 or *smith.diane@epa.gov*.

Public Hearings

EPA has not scheduled any public hearings to receive public comment concerning the proposed permit. All persons will continue to have the right to provide written comments during the public comment period. However, interested persons may request a public hearing pursuant to 40 CFR 124.12 concerning the proposed permit. Requests for a public hearing must be sent or delivered in writing to the same address as provided above for public comments prior to the close of the comment period. Requests for a public hearing must state the nature of the issues proposed to be raised in the hearing. Pursuant to 40 CFR 124.12, EPA shall hold a public hearing if it finds, on the basis of requests, a significant degree of public interest in a public hearing on the proposed permit. If EPA decides to hold a public hearing, a public notice of the date, time and place of the hearing will be made at least 30 days prior to the hearing. Any person may provide written or oral statements and data pertaining to the proposed permit at the public hearing.

III. Compliance With the Regulatory Flexibility Act

EPA's Approach to Compliance With the Regulatory Flexibility Act for General Permits

The Regulatory Flexibility Act (RFA) generally requires an agency to prepare a regulatory flexibility analysis of any rule subject to notice and comment rulemaking requirements under the Administrative Procedure Act or any other statute unless the agency certifies that the rule will not have a significant economic impact on a substantial number of small entities. Small entities include small businesses, small organizations, and small governmental jurisdictions.

The legal question of whether a general permit (as opposed to an individual permit) qualifies as a ''rule'' or as an ''adjudication'' under the Administrative Procedure Act (APA) has been the subject of periodic litigation. In a recent case, the court held that the CWA Section 404 Nationwide general permit before the court did qualify as a ''rule'' and therefore that the issuance of that general permit needed to comply with the applicable legal requirements for the issuance of a ''rule.'' *National Ass'n of Home Builders* v. *U.S. Army Corps of Engineers*, 417 F.3d 1272, 1284–85 (DC Cir.2005) (Army Corps general permits under Section 404 of the Clean Water Act are rules under the APA and the Regulatory Flexibility Act; ''Each NWP [nationwide permit] easily fits within the APA's definition 'rule.' * * * As such, each NWP constitutes a rule * * *'').

As EPA stated in 1998, ''the Agency recognizes that the question of the applicability of the APA, and thus the RFA, to the issuance of a general permit is a difficult one, given the fact that a large number of dischargers may choose to use the general permit.'' 63 FR 36489, 36497 (July 6, 1998). At that time, EPA ''reviewed its previous NPDES general permitting actions and related statements in the **Federal Register** or elsewhere,'' and stated that ''[t]his review suggests that the Agency has generally treated NPDES general permits effectively as rules, though at times it has given contrary indications as to whether these actions are rules or permits.'' *Id.* at 36496. Based on EPA's further legal analysis of the issue, the Agency ''concluded, as set forth in the proposal, that NPDES general permits are permits [*i.e.*, adjudications] under the APA and thus not subject to APA rulemaking requirements or the RFA.'' *Id.* Accordingly, the Agency stated that ''the APA's rulemaking requirements are inapplicable to issuance of such permits,'' and thus ''NPDES permitting is not subject to the requirement to publish a general notice of proposed rulemaking under the APA or any other law * * * [and] it is not subject to the RFA.'' *Id.* at 36497.

However, the Agency went on to explain that, even though EPA had concluded that it was not legally required to do so, the Agency would voluntarily perform the RFA's small-entity impact analysis. *Id.* EPA explained the strong public interest in the Agency following the RFA's requirements on a voluntary basis: ''[The notice and comment] process also provides an opportunity for EPA to consider the potential impact of general

permit terms on small entities and how to craft the permit to avoid any undue burden on small entities.'' *Id.* Accordingly, with respect to the NPDES permit that EPA was addressing in that **Federal Register** notice, EPA stated that ''the Agency has considered and addressed the potential impact of the general permit on small entities in a manner that would meet the requirements of the RFA if it applied.'' *Id.*

Subsequent to EPA's conclusion in 1998 that general permits are adjudications rather than rules, as noted above, the DC Circuit recently held that nationwide general permits under section 404 are ''rules'' rather than ''adjudications.'' Thus, this legal question remains ''a difficult one'' (*supra*). However, EPA continues to believe that there is a strong public policy interest in EPA applying the RFA's framework and requirements to the Agency's evaluation and consideration of the nature and extent of any economic impacts that a CWA general permit could have on small entities (*e.g.*, small businesses). In this regard, EPA believes that the Agency's evaluation of the potential economic impact that a general permit would have on small entities, consistent with the RFA framework discussed below, is relevant to, and an essential component of, the Agency's assessment of whether a CWA general permit would place requirements on dischargers that are appropriate and reasonable. Furthermore, EPA believes that the RFA's framework and requirements provide the Agency with the best approach for the Agency's evaluation of the economic impact of general permits on small entities. While using the RFA framework to inform its assessment of whether permit requirements are appropriate and reasonable, EPA will also continue to ensure that all permits satisfy the requirements of the Clean Water Act. Accordingly, EPA has committed to operating in accordance with the RFA's framework and requirements during the Agency's issuance of CWA general permits (in other words, the Agency has committed that it will apply the RFA in its issuance of general permits as if those permits do qualify as ''rules'' that are subject to the RFA).

Authority: Clean Water Act, 33 U.S.C. 1251 *et seq.*

Dated: March 4, 2009.

Miguel I. Flores,

Director, Water Quality Protection Division, EPA Region 6.

[FR Doc. E9–6673 Filed 3–24–09; 8:45 am]

BILLING CODE 6560–50–P

ENVIRONMENTAL PROTECTION AGENCY

[EPA–HQ–OPP–2008–0893; FRL–8404–3]

Fomesafen; Product Cancellation Order

AGENCY: Environmental Protection Agency (EPA).

ACTION: Notice.

SUMMARY: This notice announces EPA's order for the cancellation, voluntarily requested by the registrant and accepted by the Agency, of products containing the pesticide fomesafen, pursuant to section 6(f)(1) of the Federal Insecticide, Fungicide, and Rodenticide Act (FIFRA), as amended. This cancellation order follows a December 31, 2008 **Federal Register** Notice of Receipt of Request from the fomesafen registrant to voluntarily cancel all their fomesafen product registrations. Fomesafen is a pre-plant, pre-emergence and post-emergence herbicide used on soybeans, snap beans, dry beans, and cotton. It is also registered for use on agricultural fallow/idleland, nonagricultural uncultivated areas/soils, pine (forest/shelterbelt) and pine (seed orchard). These are not the last fomesafen products registered for use in the United States. In the December 31, 2008 Notice, EPA indicated that it would issue an order implementing the cancellations, unless the Agency received substantive comments within the 30–day comment period that would merit its further review of these requests, or unless the registrant withdrew their request within this period. The Agency did not receive any comments on the notice. Further, the registrant did not withdraw their request. Accordingly, EPA hereby issues in this notice a cancellation order granting the requested cancellations. Any distribution, sale, or use of the fomesafen products subject to this cancellation order is permitted only in accordance with the terms of this order, including any existing stocks provisions.

DATES: The cancellations are effective March 25, 2009.

FOR FURTHER INFORMATION CONTACT: Wilhelmena Livingston, Special Review and Reregistration Division (7508P), Office of Pesticide Programs, Environmental Protection Agency, 1200 Pennsylvania Ave., NW., Washington, DC 20460–0001; telephone number: (703) 308–8025; fax number: (703) 308–8005; e-mail address: *livingston.wilhelmena@epa.gov*.

SUPPLEMENTARY INFORMATION:

I. General Information

A. Does this Action Apply to Me?

This action is directed to the public in general, and may be of interest to a wide range of stakeholders including environmental, human health, and agricultural advocates; the chemical industry; pesticide users; and members of the public interested in the sale, distribution, or use of pesticides. Since others also may be interested, the Agency has not attempted to describe all the specific entities that may be affected by this action. If you have any questions regarding the applicability of this action to a particular entity, consult the person listed under **FOR FURTHER INFORMATION CONTACT.**

B. How Can I Get Copies of this Document and Other Related Information?

1. *Docket*. EPA has established a docket for this action under docket identification (ID) number EPA–HQ–OPP–2008–0893. Publicly available docket materials are available either in the electronic docket at *http://www.regulations.gov*, or, if only available in hard copy, at the Office of Pesticide Programs (OPP) Regulatory Public Docket in Rm. S–4400, One Potomac Yard (South Bldg.), 2777 S. Crystal Dr., Arlington, VA. The hours of operation of this Docket Facility are from 8:30 a.m. to 4 p.m., Monday through Friday, excluding legal holidays. The Docket Facility telephone number is (703) 305–5805.

2. *Electronic access*. You may access this **Federal Register** document electronically through the EPA Internet under the ''**Federal Register**'' listings at *http://www.epa.gov/fedrgstr*.

II. What Action is the Agency Taking?

This notice announces the cancellation, as requested by the registrant, of products registered under section 3 of FIFRA. These registrations are listed in sequence by registration number in Table 1 of this unit.

TABLE 1.—FOMESAFEN PRODUCT CANCELLATIONS

EPA Registration Number	Product Name
7969–82	BAS 530 04 H Herbicide
7969–83	FASTER™ Herbicide

Table 2 of this unit includes the name and address of record for the registrant of the products in Table 1 of this unit, in sequence by EPA company number.

TABLE 2.—REGISTRANT OF CANCELED AND/OR AMENDED FOMESAFEN PRODUCTS

EPA Company Number	Company Name and Address
7969	BASF, 26 Davis Drive, Triangle Park, North Carolina 27709–3528

III. Summary of Public Comments Received and Agency Response to Comments

During the public comment period provided, EPA received no comments in response to the December 31, 2008 **Federal Register** (73 FR 80390; FRL–8395–3) notice announcing the Agency's receipt of the request for voluntary cancellations of fomesafen.

IV. Cancellation Order

Pursuant to FIFRA section 6(f), EPA hereby approves the requested cancellation of fomesafen registrations identified in Table 1 of Unit II. Accordingly, the Agency orders that the fomesafen product registrations identified in Table 1 of Unit II are hereby canceled. Any distribution, sale, or use of existing stocks of the products identified in Table 1 of Unit II in a manner inconsistent with any of the Provisions for Disposition of Existing Stocks set forth in Unit VI. will be considered a violation of FIFRA.

V. What is the Agency's Authority for Taking this Action?

Section 6(f)(1) of FIFRA provides that a registrant of a pesticide product may at any time request that any of its pesticide registrations be canceled or amended to terminate one or more uses. FIFRA further provides that, before acting on the request, EPA must publish a notice of receipt of any such request in the **Federal Register**. Thereafter, following the public comment period, the Administrator may approve such a request.

VI. Provisions for Disposition of Existing Stocks

Existing stocks are those stocks of registered pesticide products which are currently in the United States and which were packaged, labeled, and released for shipment prior to the effective date of the cancellation action. The cancellation order issued in this notice includes the following existing stocks provisions.

Registrants may sell and distribute existing stocks for 1–year from the date of the cancellation request. The products may be sold, distributed, and used by people other than the registrant until existing stocks have been exhausted, provided that such sale, distribution, and use complies with the EPA-approved label and labeling of the product.

List of Subjects

Environmental protection, Pesticides and pests.

Dated: February 25, 2009.

Peter Caulkins,

Acting Director, Special Review and Reregistration Division, Office of Pesticide Programs.

[FR Doc. E9–6260 Filed 3–24–09; 8:45 am]

BILLING CODE 6560–50–S

ENVIRONMENTAL PROTECTION AGENCY

[EPA–HQ–ORD–2008–0649; FRL–8786–3]

Board of Scientific Counselors (BOSC), Human Health Subcommittee Meetings—Fall 2008 and Winter 2009

AGENCY: Environmental Protection Agency (EPA).

ACTION: Notice of meeting.

SUMMARY: Pursuant to the Federal Advisory Committee Act, Public Law 92–463, the Environmental Protection Agency, Office of Research and Development (ORD), gives notice of a meeting of the Board of Scientific Counselors (BOSC) Human Health Subcommittee.

DATES: A teleconference call will be held on Tuesday, April 21, 2009, from 1 p.m. to 2 p.m. EDT. The meeting may adjourn early if all business is finished. Requests for the draft agenda or for making oral presentations at the meetings will be accepted up to one business day before each meeting.

ADDRESSES: Submit your comments, identified by Docket ID No. EPA–HQ–ORD–2008–0649, by one of the following methods:

- *http://www.regulations.gov:* Follow the on-line instructions for submitting comments.
- *E-mail:* Send comments by electronic mail (e-mail) to: *ORD.Docket@epa.gov*, Attention Docket ID No. EPA–HQ–ORD–2008–0649.
- *Fax:* Fax comments to: (202) 566–0224, Attention Docket ID No. EPA–HQ–ORD–2008–0649.
- *Mail:* Send comments by mail to: Board of Scientific Counselors (BOSC), Human Health Subcommittee Meetings—Fall 2008 and Winter 2009 Docket, Mailcode: 28221T, 1200 Pennsylvania Ave., NW., Washington, DC, 20460, Attention Docket ID No. EPA–HQ–ORD–2008–0649.
- *Hand Delivery or Courier:* Deliver comments to: EPA Docket Center (EPA/DC), Room B102, EPA West Building, 1301 Constitution Avenue, NW., Washington, DC, Attention Docket ID No. EPA–HQ–ORD–2008–0649.

Note: This is not a mailing address. Such deliveries are only accepted during the docket's normal hours of operation, and special arrangements should be made for deliveries of boxed information.

Instructions: Direct your comments to Docket ID No. EPA–HQ–ORD–2008–0649. EPA's policy is that all comments received will be included in the public docket without change and may be made available online at *http://www.regulations.gov*, including any personal information provided, unless the comment includes information claimed to be Confidential Business Information (CBI) or other information whose disclosure is restricted by statute. Do not submit information that you consider to be CBI or otherwise protected through *http://www.regulations.gov* or e-mail. The *http://www.regulations.gov* Web site is an ''anonymous access'' system, which means EPA will not know your identity or contact information unless you provide it in the body of your comment. If you send an e-mail comment directly to EPA without going through *http://www.regulations.gov*, your e-mail address will be automatically captured and included as part of the comment that is placed in the public docket and made available on the Internet. If you submit an electronic comment, EPA recommends that you include your name and other contact information in the body of your comment and with any disk or CD–ROM you submit. If EPA cannot read your comment due to technical difficulties and cannot contact you for clarification, EPA may not be able to consider your comment. Electronic files should avoid the use of special characters, any form of encryption, and be free of any defects or viruses. For additional information about EPA's public docket visit the EPA Docket Center homepage at *http://www.epa.gov/epahome/dockets.htm*.

Docket: All documents in the docket are listed in the *http://www.regulations.gov* index. Although listed in the index, some information is not publicly available, *e.g.*, CBI or other information whose disclosure is restricted by statute. Certain other material, such as copyrighted material, will be publicly available only in hard copy. Publicly available docket materials are available either electronically in *http://www.regulations.gov* or in hard copy at

the Board of Scientific Counselors (BOSC), Human Health Subcommittee Meetings—Fall 2008 and Winter 2009 Docket, EPA/DC, EPA West, Room B102, 1301 Constitution Ave., NW., Washington, DC. The Public Reading Room is open from 8:30 a.m. to 4:30 p.m., Monday through Friday, excluding legal holidays. The telephone number for the Public Reading Room is (202) 566–1744, and the telephone number for the ORD Docket is (202) 566–1752.

FOR FURTHER INFORMATION CONTACT: The Designated Federal Officer via mail at: Virginia Houk, Mail Code B305–02, National Health and Environmental Effects Research Laboratory, Office of Research and Development, Environmental Protection Agency, Research Triangle Park, NC, 27711; *via phone/voice mail at:* (919) 541–2815; *via fax at:* (919) 685–3250; or via *e-mail at: houk.virginia@epa.gov*.

SUPPLEMENTARY INFORMATION:

General Information

Any member of the public interested in receiving a draft BOSC agenda or making a presentation at any of the meetings may contact Virginia Houk, the Designated Federal Officer, via any of the contact methods listed in the **FOR FURTHER INFORMATION CONTACT** section above. In general, each individual making an oral presentation will be limited to a total of three minutes.

Proposed agenda items for the teleconference include, but are not limited to: Subcommittee discussion of revisions to the draft report and recommendations for ORD's Human Health Research Program. The meeting is open to the public.

Dated: March 19, 2009.

Mary Ellen Radzikowski,

Acting Director, Office of Science Policy.

[FR Doc. E9–6675 Filed 3–24–09; 8:45 am]

BILLING CODE 6560–50–P

ENVIRONMENTAL PROTECTION AGENCY

[EPA–HQ–ORD–8786–6]

Environmental Laboratory Advisory Board (ELAB) Meeting Dates, and Agenda

AGENCY: Environmental Protection Agency (EPA).

ACTION: Notice of Teleconference Meetings

SUMMARY: The Environmental Protection Agency's Environmental Laboratory Advisory Board (ELAB), as previously announced, will have teleconference meetings on April 15, 2009 at 1 p.m. ET; May 20, 2009 at 1 p.m. ET; June 17, 2009 at 1 p.m. ET; and July 15, 2009 at 1 p.m. ET to discuss the ideas and views presented at the previous ELAB meetings, as well as new business. Items to be discussed by ELAB over these coming meetings include: (1) Expanding the number of laboratories seeking National Environmental Laboratory Accreditation Conference (NELAC) accreditation; (2) proficiency testing; (3) ELAB support to the Agency's Forum on Environmental Measurements (FEM); (4) implementing the performance approach; and (5) follow-up on some of ELAB's past recommendations and issues. In addition to these teleconferences, ELAB will be hosting their next face-to-face meeting on August 10, 2009 at the Hyatt Regency San Antonio in San Antonio, TX at 9 a.m. (CT).

Written comments on laboratory accreditation issues and/or environmental monitoring issues are encouraged and should be sent to Ms. Lara P. Autry, DFO, U.S. EPA (E243–05),109 T. W. Alexander Drive, Research Triangle Park, NC 27709, faxed to (919) 541–4261, or e-mailed to *autry.lara@epa.gov*. Members of the public are invited to listen to the teleconference calls, and time permitting, will be allowed to comment on issues discussed during this and previous ELAB meetings. Those persons interested in attending should call Lara P. Autry at (919) 541–5544 to obtain teleconference information. For information on access or services for individuals with disabilities, please contact Lara P. Autry at the number above. To request accommodation of a disability, please contact Lara P. Autry, preferably at least 10 days prior to the meeting, to give EPA as much time as possible to process your request.

Dated: March 13, 2009.

Kevin Teichman,

EPA Acting Science Advisor.

[FR Doc. E9–6612 Filed 3–24–09; 8:45 am]

BILLING CODE 6560–50–P

ENVIRONMENTAL PROTECTION AGENCY

[EPA–HQ–OPP–2008–0489; FRL–8408–2]

FIFRA Scientific Advisory Panel; Notice of Public Meeting

AGENCY: Environmental Protection Agency (EPA).

ACTION: Notice.

SUMMARY: There will be a 3–day meeting of the Federal Insecticide, Fungicide, and Rodenticide Act Scientific Advisory Panel (FIFRA SAP) to consider and review an evaluation of the common mechanism of action of pyrethroid pesticides.

DATES: The meeting will be held on June 16–18, 2009, from approximately 8:30 a.m. to 5:00 p.m.

Comments. The Agency encourages that written comments be submitted by June 2, 2009 and requests for oral comments be submitted by June 9, 2009. However, written comments and requests to make oral comments may be submitted until the date of the meeting, but anyone submitting written comments after June 2, 2009 should contact the Designated Federal Official (DFO) listed under **FOR FURTHER INFORMATION CONTACT.** For additional instructions, see Unit I.C. of the **SUPPLEMENTARY INFORMATION**.

Nominations. Nominations of candidates to serve as ad hoc members of FIFRA SAP for this meeting should be provided on or before April 8, 2009.

Special accommodations. For information on access or services for individuals with disabilities, and to request accommodation of a disability, please contact the DFO listed under **FOR FURTHER INFORMATION CONTACT** at least 10 days prior to the meeting to give EPA as much time as possible to process your request.

ADDRESSES: The meeting will be held at the Environmental Protection Agency, Conference Center, Lobby Level, One Potomac Yard (South Bldg.), 2777 S. Crystal Dr., Arlington, VA 22202.

Comments. Submit your comments, identified by docket identification (ID) number EPA–HQ–OPP–2008–0489, by one of the following methods:

- *Federal eRulemaking Portal*: *http://www.regulations.gov*. Follow the on-line instructions for submitting comments.
- *Mail*: Office of Pesticide Programs (OPP) Regulatory Public Docket (7502P), Environmental Protection Agency, 1200 Pennsylvania Ave., NW., Washington, DC 20460–0001.
- *Delivery*: OPP Regulatory Public Docket (7502P), Environmental Protection Agency, Rm. S–4400, One Potomac Yard (South Bldg.), 2777 S. Crystal Dr., Arlington, VA. Deliveries are only accepted during the Docket Facility's normal hours of operation (8:30 a.m. to 4 p.m., Monday through Friday, excluding legal holidays). Special arrangements should be made for deliveries of boxed information. The Docket Facility telephone number is (703) 305–5805.

Instructions. Direct your comments to docket ID number EPA–HQ–OPP–2008–0489. If your comments contain any information that you consider to be CBI

or otherwise protected, please contact the DFO listed under **FOR FURTHER INFORMATION CONTACT** to obtain special instructions before submitting your comments. EPA's policy is that all comments received will be included in the docket without change and may be made available on-line at *http://www.regulations.gov*, including any personal information provided, unless the comment includes information claimed to be Confidential Business Information (CBI) or other information whose disclosure is restricted by statute. Do not submit information that you consider to be CBI or otherwise protected through regulations.gov or e-mail. The regulations.gov website is an ''anonymous access'' system, which means EPA will not know your identity or contact information unless you provide it in the body of your comment. If you send an e-mail comment directly to EPA without going through regulations.gov, your e-mail address will be automatically captured and included as part of the comment that is placed in the docket and made available on the Internet. If you submit an electronic comment, EPA recommends that you include your name and other contact information in the body of your comment and with any disk or CD-ROM you submit. If EPA cannot read your comment due to technical difficulties and cannot contact you for clarification, EPA may not be able to consider your comment. Electronic files should avoid the use of special characters, any form of encryption, and be free of any defects or viruses.

Docket: All documents in the docket are listed in the docket index available at *http://www.regulations.gov*. Although listed in the index, some information is not publicly available, e.g., CBI or other information whose disclosure is restricted by statute. Certain other material, such as copyrighted material, is not placed on the Internet and will be publicly available only in hard copy form. Publicly available docket materials are available either in the electronic docket at *http://www.regulations.gov*, or, if only available in hard copy, at the OPP Regulatory Public Docket in Rm. S–4400, One Potomac Yard (South Bldg.), 2777 S. Crystal Dr., Arlington, VA. The hours of operation of this Docket Facility are from 8:30 a.m. to 4 p.m., Monday through Friday, excluding legal holidays. The Docket Facility telephone number is (703) 305–5805.

Nominations, requests to present oral comments, and requests for special accommodations. Submit nominations to serve as ad hoc members of FIFRA SAP, requests for special seating accommodations, or requests to present oral comments to the DFO listed under **FOR FURTHER INFORMATION CONTACT**.

FOR FURTHER INFORMATION CONTACT: Joseph E. Bailey, DFO, Office of Science Coordination and Policy (7201M), Environmental Protection Agency, 1200 Pennsylvania Ave., NW., Washington, DC 20460–0001; telephone number: (202) 564–2045; fax number: (202) 564–8382; e-mail address: *bailey.joseph@epa.gov*.

SUPPLEMENTARY INFORMATION:

I. General Information

A. Does this Action Apply to Me?

This action is directed to the public in general. This action may, however, be of interest to persons who are or may be required to conduct testing of chemical substances under the Federal Food, Drug, and Cosmetic Act (FFDCA), FIFRA, and the Food Quality Protection Act of 1996 (FQPA). Since other entities may also be interested, the Agency has not attempted to describe all the specific entities that may be affected by this action. If you have any questions regarding the applicability of this action to a particular entity, consult the DFO listed under **FOR FURTHER INFORMATION CONTACT**.

B. What Should I Consider as I Prepare My Comments for EPA?

When submitting comments, remember to:

1. Identify the document by docket ID number and other identifying information (subject heading, **Federal Register** date and page number).

2. Follow directions. The Agency may ask you to respond to specific questions or organize comments by referencing a Code of Federal Regulations (CFR) part or section number.

3. Explain why you agree or disagree; suggest alternatives and substitute language for your requested changes.

4. Describe any assumptions and provide any technical information and/or data that you used.

5. If you estimate potential costs or burdens, explain how you arrived at your estimate in sufficient detail to allow for it to be reproduced.

6. Provide specific examples to illustrate your concerns and suggest alternatives.

7. Explain your views as clearly as possible, avoiding the use of profanity or personal threats.

8. Make sure to submit your comments by the comment period deadline identified.

C. How May I Participate in this Meeting?

You may participate in this meeting by following the instructions in this unit. To ensure proper receipt by EPA, it is imperative that you identify docket ID number EPA–HQ–OPP–2008–0489 in the subject line on the first page of your request.

1. *Written comments*. The Agency encourages that written comments be submitted, using the instructions in **ADDRESSES**, no later than June 2, 2009, to provide FIFRA SAP the time necessary to consider and review the written comments. Written comments are accepted until the date of the meeting, but anyone submitting written comments after June 2, 2009 should contact the DFO listed under **FOR FURTHER INFORMATION CONTACT.** Anyone submitting written comments at the meeting should bring 30 copies for distribution to FIFRA SAP.

2. *Oral comments*. The Agency encourages that each individual or group wishing to make brief oral comments to FIFRA SAP submit their request to the DFO listed under **FOR FURTHER INFORMATION CONTACT** no later than June 9, 2009, in order to be included on the meeting agenda. Requests to present oral comments will be accepted until the date of the meeting and, to the extent that time permits, the Chair of FIFRA SAP may permit the presentation of oral comments at the meeting by interested persons who have not previously requested time. The request should identify the name of the individual making the presentation, the organization (if any) the individual will represent, and any requirements for audiovisual equipment (e.g., overhead projector, 35 mm projector, chalkboard). Oral comments before FIFRA SAP are limited to approximately 5 minutes unless prior arrangements have been made. In addition, each speaker should bring 30 copies of his or her comments and presentation slides for distribution to the FIFRA SAP at the meeting.

3. *Seating at the meeting*. Seating at the meeting will be open and on a first-come basis.

4. *Request for nominations to serve as ad hoc members of FIFRA SAP for this meeting*. As part of a broader process for developing a pool of candidates for each meeting, FIFRA SAP staff routinely solicits the stakeholder community for nominations of prospective candidates for service as ad hoc members of FIFRA SAP. Any interested person or organization may nominate qualified individuals to be considered as prospective candidates for a specific meeting. Individuals nominated for this

meeting should have expertise in one or more of the following areas: Pyrethroid pesticides, voltage-sensitive sodium channels, mode of action analysis (mode of action framework experience), motor activity and functional observational battery, and dose response modeling. Nominees should be scientists who have sufficient professional qualifications, including training and experience, to be capable of providing expert comments on the scientific issues for this meeting. Nominees should be identified by name, occupation, position, address, and telephone number. Nominations should be provided to the DFO listed under **FOR FURTHER INFORMATION CONTACT** on or before April 8, 2009. The Agency will consider all nominations of prospective candidates for this meeting that are received on or before this date. However, final selection of ad hoc members for this meeting is a discretionary function of the Agency.

The selection of scientists to serve on FIFRA SAP is based on the function of the panel and the expertise needed to address the Agency's charge to the panel. No interested scientists shall be ineligible to serve by reason of their membership on any other advisory committee to a Federal department or agency or their employment by a Federal department or agency except the EPA. Other factors considered during the selection process include availability of the potential panel member to fully participate in the panel's reviews, absence of any conflicts of interest or appearance of lack of impartiality, independence with respect to the matters under review, and lack of bias. Although financial conflicts of interest, the appearance of lack of impartiality, lack of independence, and bias may result in disqualification, the absence of such concerns does not assure that a candidate will be selected to serve on FIFRA SAP. Numerous qualified candidates are identified for each panel. Therefore, selection decisions involve carefully weighing a number of factors including the candidates' areas of expertise and professional qualifications and achieving an overall balance of different scientific perspectives on the panel. In order to have the collective breadth of experience needed to address the Agency's charge for this meeting, the Agency anticipates selecting approximately 10 ad hoc scientists.

FIFRA SAP members are subject to the provisions of 5 CFR part 2634, Executive Branch Financial Disclosure, as supplemented by the EPA in 5 CFR part 6401. In anticipation of this requirement, prospective candidates for service on the FIFRA SAP will be asked to submit confidential financial information which shall fully disclose, among other financial interests, the candidate's employment, stocks and bonds, and where applicable, sources of research support. The EPA will evaluate the candidates financial disclosure form to assess whether there are financial conflicts of interest, appearance of a lack of impartiality or any prior involvement with the development of the documents under consideration (including previous scientific peer review) before the candidate is considered further for service on FIFRA SAP. Those who are selected from the pool of prospective candidates will be asked to attend the public meetings and to participate in the discussion of key issues and assumptions at these meetings. In addition, they will be asked to review and to help finalize the meeting minutes. The list of FIFRA SAP members participating at this meeting will be posted on the FIFRA SAP website at *http://epa.gov/scipoly/sap* or may be obtained from the OPP Regulatory Public Docket at *http://www.regulations.gov*.

II. Background

A. Purpose of FIFRA SAP

FIFRA SAP serves as the primary scientific peer review mechanism of EPA's Office of Prevention, Pesticides and Toxic Substances (OPPTS) and is structured to provide scientific advice, information and recommendations to the EPA Administrator on pesticides and pesticide-related issues as to the impact of regulatory actions on health and the environment. FIFRA SAP is a Federal advisory committee established in 1975 under FIFRA that operates in accordance with requirements of the Federal Advisory Committee Act. FIFRA SAP is composed of a permanent panel consisting of seven members who are appointed by the EPA Administrator from nominees provided by the National Institutes of Health and the National Science Foundation. FIFRA, as amended by FQPA, established a Science Review Board consisting of at least 60 scientists who are available to the SAP on an ad hoc basis to assist in reviews conducted by the SAP. As a peer review mechanism, FIFRA SAP provides comments, evaluations and recommendations to improve the effectiveness and quality of analyses made by Agency scientists. Members of FIFRA SAP are scientists who have sufficient professional qualifications, including training and experience, to provide expert advice and recommendation to the Agency.

B. Public Meeting

Pyrethroid pesticide usage has increased in the past decade in agricultural and residential settings. The Office of Pesticide Programs is in the early stages of evaluating the potential risks from this increased exposure to these pesticides. As part of this evaluation, OPP is developing an analysis of the toxicity profiles of these pesticides and is evaluating whether or not some or all of the pyrethroids share a common mechanism of action (i.e., those pesticides that produce a common toxic effect by a common mechanism of toxicity). The Agency will be seeking the Scientific Advisory Panel's (SAP) advice on a set of scientific issues raised in a draft science policy document proposing to establish a common mechanism group for the pyrethroid pesticides. This proposed grouping may include one group or potentially two or more sub-groups. Establishing a common mechanism group is the first stage toward developing a cumulative risk assessment as required under the Food Quality Protection Act. Pending the outcome of this panel review, the Agency may begin work on the cumulative risk assessment for those pyrethroids that are determined to share a common mechanism. The Agency will be seeking advice from the SAP on the following areas related to the toxicity of pyrethroid pesticides:

1. Interpretation of *in vivo* motor activity and functional observational battery data in animals;
2. Interpretation of *in vitro* literature studies involving sodium, calcium, and chloride channels; and
3. Structural and functional similarities among these chemicals.

C. FIFRA SAP Documents and Meeting Minutes

EPA's background paper, related supporting materials, charge/questions to FIFRA SAP, FIFRA SAP composition (i.e., members and ad hoc members for this meeting), and the meeting agenda will be available by early June, 2009. In addition, the Agency may provide additional background documents as the materials become available. You may obtain electronic copies of these documents, and certain other related documents that might be available electronically, at *http://www.regulations.gov* and the FIFRA SAP homepage at *http://www.epa.gov/scipoly/sap*.

FIFRA SAP will prepare meeting minutes summarizing its recommendations to the Agency approximately 90 days after the meeting. The meeting minutes will be

posted on the FIFRA SAP website or may be obtained from the OPP Regulatory Public Docket at *http://www.regulations.gov*.

List of Subjects

Environmental protection, Pesticides and pests.

Dated: March 19, 2009.

Frank Sanders,

Director, Office of Science Coordination and Policy.

[FR Doc. E9–6608 Filed 3–24–09; 8:45 am]

BILLING CODE 6560–50–S

ENVIRONMENTAL PROTECTION AGENCY

[EPA–HQ–OPP–2009–0045; FRL–8399-4]

Notice of Receipt of Several Pesticide Petitions Filed for Residues of Pesticide Chemicals in or on Various Commodities

AGENCY: Environmental Protection Agency (EPA).

ACTION: Notice.

SUMMARY: This notice announces the Agency's receipt of several initial filings of pesticide petitions proposing the establishment or modification of regulations for residues of pesticide chemicals in or on various commodities.

DATES: Comments must be received on or before April 24, 2009.

ADDRESSES: Submit your comments, identified by docket identification (ID) number and the pesticide petition number (PP) of interest as shown in the body of this document, by one of the following methods:

• *Federal eRulemaking Portal*: *http://www.regulations.gov*. Follow the on-line instructions for submitting comments.

• *Mail*: Office of Pesticide Programs (OPP) Regulatory Public Docket (7502P), Environmental Protection Agency, 1200 Pennsylvania Ave., NW., Washington, DC 20460–0001.

• *Delivery*: OPP Regulatory Public Docket (7502P), Environmental Protection Agency, Rm. S–4400, One Potomac Yard (South Bldg.), 2777 S. Crystal Dr., Arlington, VA. Deliveries are only accepted during the Docket Facility's normal hours of operation (8:30 a.m. to 4 p.m., Monday through Friday, excluding legal holidays). Special arrangements should be made for deliveries of boxed information. The Docket Facility telephone number is (703) 305–5805.

Instructions: Direct your comments to the docket ID number and the pesticide petition number of interest as shown in the body of this document. EPA's policy is that all comments received will be included in the docket without change and may be made available on-line at *http://www.regulations.gov*, including any personal information provided, unless the comment includes information claimed to be Confidential Business Information (CBI) or other information whose disclosure is restricted by statute. Do not submit information that you consider to be CBI or otherwise protected through regulations.gov or e-mail. The regulations.gov website is an ''anonymous access'' system, which means EPA will not know your identity or contact information unless you provide it in the body of your comment. If you send an e-mail comment directly to EPA without going through regulations.gov, your e-mail address will be automatically captured and included as part of the comment that is placed in the docket and made available on the Internet. If you submit an electronic comment, EPA recommends that you include your name and other contact information in the body of your comment and with any disk or CD-ROM you submit. If EPA cannot read your comment due to technical difficulties and cannot contact you for clarification, EPA may not be able to consider your comment. Electronic files should avoid the use of special characters, any form of encryption, and be free of any defects or viruses.

Docket: All documents in the docket are listed in the docket index available at *http://www.regulations.gov*. Although listed in the index, some information is not publicly available, e.g., CBI or other information whose disclosure is restricted by statute. Certain other material, such as copyrighted material, is not placed on the Internet and will be publicly available only in hard copy form. Publicly available docket materials are available either in the electronic docket at *http://www.regulations.gov*, or, if only available in hard copy, at the OPP Regulatory Public Docket in Rm. S–4400, One Potomac Yard (South Bldg.), 2777 S. Crystal Dr., Arlington, VA. The hours of operation of this Docket Facility are from 8:30 a.m. to 4 p.m., Monday through Friday, excluding legal holidays. The Docket Facility telephone number is (703) 305–5805.

FOR FURTHER INFORMATION CONTACT: A contact person, with telephone number and e-mail address, is listed at the end of each pesticide petition summary. You may also reach each contact person by mail at: Registration Division (7505P), Office of Pesticide Programs, Environmental Protection Agency, 1200 Pennsylvania Ave., NW., Washington, DC 20460–0001.

SUPPLEMENTARY INFORMATION:

I. General Information

A. Does this Action Apply to Me?

You may be potentially affected by this action if you are an agricultural producer, food manufacturer, or pesticide manufacturer. Potentially affected entities may include, but are not limited to:

• Crop production (NAICS code 111).

• Animal production (NAICS code 112).

• Food manufacturing (NAICS code 311).

• Pesticide manufacturing (NAICS code 32532).

This listing is not intended to be exhaustive, but rather provides a guide for readers regarding entities likely to be affected by this action. Other types of entities not listed in this unit could also be affected. The North American Industrial Classification System (NAICS) codes have been provided to assist you and others in determining whether this action might apply to certain entities. If you have any questions regarding the applicability of this action to a particular entity, consult the person listed at the end of the pesticide petition summary of interest.

B. What Should I Consider as I Prepare My Comments for EPA?

1. *Submitting CBI*. Do not submit this information to EPA through regulations.gov or e-mail. Clearly mark the part or all of the information that you claim to be CBI. For CBI information in a disk or CD-ROM that you mail to EPA, mark the outside of the disk or CD-ROM as CBI and then identify electronically within the disk or CD-ROM the specific information that is claimed as CBI. In addition to one complete version of the comment that includes information claimed as CBI, a copy of the comment that does not contain the information claimed as CBI must be submitted for inclusion in the public docket. Information so marked will not be disclosed except in accordance with procedures set forth in 40 CFR part 2.

2. *Tips for preparing your comments*. When submitting comments, remember to:

i. Identify the document by docket ID number and other identifying information (subject heading, **Federal Register** date and page number).

ii. Follow directions. The Agency may ask you to respond to specific questions or organize comments by referencing a Code of Federal Regulations (CFR) part or section number.

iii. Explain why you agree or disagree; suggest alternatives and substitute language for your requested changes.

iv. Describe any assumptions and provide any technical information and/or data that you used.

v. If you estimate potential costs or burdens, explain how you arrived at your estimate in sufficient detail to allow for it to be reproduced.

vi. Provide specific examples to illustrate your concerns and suggest alternatives.

vii. Explain your views as clearly as possible, avoiding the use of profanity or personal threats.

viii. Make sure to submit your comments by the comment period deadline identified.

3. *Environmental justice*. EPA seeks to achieve environmental justice, the fair treatment and meaningful involvement of any group, including minority and/or low-income populations, in the development, implementation, and enforcement of environmental laws, regulations, and policies. To help address potential environmental justice issues, the Agency seeks information on any groups or segments of the population who, as a result of their location, cultural practices, or other factors, may have atypical or disproportionately high and adverse human health impacts or environmental effects from exposure to the pesticides discussed in this document, compared to the general population.

II. What Action is the Agency Taking?

EPA is announcing its receipt of several pesticide petitions filed under section 408 of the Federal Food, Drug, and Cosmetic Act (FFDCA), 21 U.S.C. 346a, proposing the establishment or modification of regulations in 40 CFR part 174 or part 180 for residues of pesticide chemicals in or on various food commodities. EPA has determined that the pesticide petitions described in this notice contain the data or information prescribed in FFDCA section 408(d)(2); however, EPA has not fully evaluated the sufficiency of the submitted data at this time or whether the data support granting of the pesticide petitions. Additional data may be needed before EPA can make a final determination on these pesticide petitions.

Pursuant to 40 CFR 180.7(f), a summary of each of the petitions that are the subject of this notice, prepared by the petitioner, is included in a docket EPA has created for each rulemaking. The docket for each of the petitions is available on-line at *http://www.regulations.gov*.

As specified in FFDCA section 408(d)(3), (21 U.S.C. 346a(d)(3)), EPA is publishing notice of the petition so that the public has an opportunity to comment on this request for the establishment or modification of regulations for residues of pesticides in or on food commodities. Further information on the petition may be obtained through the petition summary referenced in this unit.

New Tolerance

1. *PP 8F7451*. (EPA–HQ–OPP–2009-0007). Cheminova, One Park Drive, Research Triangle Park, NC 27707, proposes to establish a tolerance in 40 CFR part 180.364 for residues of the herbicide glyphosate N-(phosphonomethyl) glycine resulting from the application of glyphosate, the isopropylamine salt of glyphosate, the ethanolamine salt of glyphosate, the dimethylamine salt of glyphosate, the ammonium salt of glyphosate, and the potassium salt of glyphosate in or on cotton, gin by-products at 210 parts per million (ppm). Adequate enforcement methods are available for analysis of residues of glyphosate and its metabolite AMPA in or on plant commodities and in water. These methods include gas liquid chromatography (GLC) (Method I of PAM Vol. II; limit of detection is 0.05 ppm) and high performance liquid chromatography (HPLC) with fluorometric detection. Use of the GLC method, however, is being discouraged due to lengthiness of the procedure. The HPLC method has undergone successful EPA validation and was recommended for inclusion in PAM Vol. II; the limit of detection is 0.0005 ppm. For enforcement of tolerances in animal commodities, an HPLC method with fluorescence detector is available; the reported limits of detection are 0.01 ppm for glyphosate and 0.012 ppm for AMPA.'' Contact: Vickie Walters, 703-305-5704, *walters.vickie@epa.gov*.

New Tolerance Exemption

1. *PP 8E7465*. (EPA–HQ–OPP–2008–0888). The Joint Inerts Task Force, Cluster Support Team 23, EPA Company Number 84951, c/o CropLife America, 1156 15th Street, N.W., Suite 400, Washington, DC 20005, proposes to establish an exemption from the requirement of a tolerance for residues of Polyglyceryl Phthalate Ester of Coconut Fatty Acids under 40 CFR §180.910, including Fatty acid coco polymers with glycerol and phthalic anhydride (CAS No. 67746–02–5) and Coconut oil polymer with glycerol and phthalic anhydride (CAS No. 66070–87–9) when used as pesticide inert ingredients in pesticide formulations in or on all raw agricultural commodities. Because this petition is a request for an exemption from the requirement of a tolerance, no analytical method is required. Contact: Kerry Leifer, 703-308-8811, *leifer.kerry@epa.gov*.

2. *PP 8E7466*. (EPA–HQ–OPP–2008–0890). The Joint Inerts Task Force, Cluster Support Team 5, EPA Company Number 84941, c/o CropLife America, 1156 15th Street, N.W., Suite 400, Washington, DC 20005, proposes to establish an exemption from the requirement of a tolerance for residues of [alpha]-[p-(1,1,3,3-Tetramethylbutyl)phenyl]-[omega]-hydroxypoly (oxyethylene) produced by the condensation of 1 mole of p-(1,1,3,3-tetramethylbutyl)phenol with a range of 1-14 or 30-70 moles of ethylene oxide: if a blend of products is used, the average range number of moles of ethylene oxide reacted to produce any product that is a component of the blend shall be in the range of 1-14 or 30-70 under 40 CFR 180.910 including the following: Poly (oxy-1, 2-ethanediyl), alpha-[4-(1,1,3,3-tetramethylbutyl)phenyl]-omega-hydroxy- (CAS No. 9036–19–5) and Poly (oxy-1, 2-ethanediyl), alpha-[4-(1,1,3,3-tetramethylbutyl)phenyl]-omega-hydroxy- (CAS No. 9002–93–1) when used as pesticide inert ingredients in pesticide formulations. Because this petition is a request for an exemption from the requirement of a tolerance, no analytical method is required. Contact: Kerry Leifer, 703-308-8811, *leifer.kerry@epa.gov*.

3. *PP 8E7472*. (EPA–HQ–OPP–2008–0889). The Joint Inerts Task Force, Cluster Support Team 8, EPA Company Number 84942, c/o CropLife America, 1156 15th Street, N.W., Suite 400, Washington, DC 20005, proposes to establish an exemption from the requirement of a tolerance for the replacement descriptor for pre-harvest use on all agricultural crops under 40 CFR §180.920 and when applied to animals under 40 CFR §180.930 for the following amine salts of alkyl (C8-C24) benzenesulfonic acid (dimethylaminopropylamine, isopropylamine, mono-, di-, and triethanolamine), including CAS Reg Nos. 68953–97–9, 26545–53–9, 877677–48–0, 319926–68–6, 90194–53–9, 55470–69–4, 68910–32–7, 26264–05–1, 157966–96–6, 68584–24–7, 68648–81–7, 68649–00–3, 68953–93–5, 90218–35–2, 27323–41–7, 68584–25–8, 68648–96–4, 68411–31–4, 90194–42–6 and 1093628–27–3. Prior to the submission of this petition, a data development plan was submitted to the Agency and subsequently it was agreed Joint Inerts

Task Force, Cluster Support Team 8 that additional data be generated on CAS RN 26264–05–1. Because this petition is a request for an exemption from the requirement of a tolerance, no analytical method is required. Contact: Kerry Leifer, 703–308–8811, *leifer.kerry@epa.gov*.

4. *PP 8E7478*. (EPA–HQ–OPP–2008–0892). The Joint Inerts Task Force, Cluster Support Team 9, EPA Company Number 84943, c/o CropLife America, 1156 15th Street, N.W., Suite 400, Washington, DC 20005, proposes to establish an exemption from the requirement of a tolerance for residues of Nonylphenol Ethoxylate (NPE) Phosphate and Sulfate Derivatives pre– and post–harvest (40 CFR 180.910) and animal uses (40 CFR 180.930) in or on all raw agricultural commodities when used as pesticide inert ingredients in pesticide formulations, including 40 CFR §180.910 and 40 CFR §180.930: [alpha]–(p–Nonylphenyl)–[omega]–hydroxypoly(oxyethylene) mixture of dihydrogen phosphate and mono hydrogen phosphate esters and the corresponding ammonium, calcium, magnesium, monoethanolamine, potassium, sodium, and zinc salts of the phosphate esters; the nonyl group is a propylene trimer isomer and the poly(oxyethylene) content averages 4–14 moles or 30 moles for CAS Reg. Nos. 51811–79–1, 59139–23–0, 67922–57–0, 68412–53–3, 68553–97–9, 68954–84–7, 99821–14–4, 152143–22–1, 51609–41–7, 37340–60–6, 106151–63–7, 68584–47–4, 52503–15–8, 68458–49–1; and 40 CFR 180.910 and 40 CFR 180.930: [alpha]–(p–Nonylphenyl)–[omega]–hydroxypoly(oxyethylene) sulfate, ammonium, calcium, magnesium, potassium, sodium, and zinc salts; the nonyl group is propylene trimer isomer and the poly(oxyethylene) content averages 4 moles for CAS Reg Nos. 9014–90–8, 9051–57–4, 9081–17–8, 68649–55–8, 68891–33–8; and 40 CFR §180.930 [alpha]–(p–Nonylphenyl)–[omega]–hydroxypoly(oxyethylene) sulfate, and its ammonium, calcium, magnesium, potassium, sodium, and zinc salts; the nonyl group is a propylene trimer isomer and the poly(oxyethylene) content averages 4–14 or 30–90 moles of ethylene oxide for CAS Reg Nos. 9014–90–8, 9051–57–4, 9081–17–8, 68649–55–8, 68891–33–8. Because this petition is a request for an exemption from the requirement of a tolerance, no analytical method is required. Contact: Kerry Leifer, 703–308–8811, *leifer.kerry@epa.gov*.

5 *PP 8E7494*. (EPA–HQ–OPP–2008–0944). Joint Inerts Task Force, Cluster Support Team 20, EPA Company Number 84950, c/o CropLife America, 1156 15th Street, N.W., Suite 400, Washington, DC 20005, proposes to establish an exemption from the requirement of a tolerance for residues of Polyoxyethylene polyoxypropylene mono(di–sec–butylphenyl) ether (CAS No. 69029–39–6), under 40 CFR 180.920, when used as a pesticide inert ingredient in herbicide formulations. It is proposed that the tolerance exemption is limited to use with pesticidal formulations that are used as herbicides. Because this petition is a request for an exemption from the requirement of a tolerance, no analytical method is required. Contact: Kerry Leifer, 703-308-8811, *leifer.kerry@epa.gov*.

6 *PP 8E7405*. (EPA–HQ–OPP–2008–0822). Akzo Nobel Surface Chemistry, LLC, 525 West Van Buren Street, Chicago, IL 60607-3823, proposes to establish an exemption from the requirement of a tolerance in 40 CFR 180.920 for residues of mono-, di-, and trimethylnapthalendesulfonic acids and naphthalenesulfonic acids formaldehyde condensates, ammonium and sodium salts when used as a pesticide inert ingredient in pesticide formulations. Because this petition is a request for an exemption from the requirement of a tolerance, no analytical method is required. Contact: Karen Samek, 703-347-8825, *samek.karen@epa.gov*.

List of Subjects

Environmental protection, Agricultural commodities, Feed additives, Food additives, Pesticides and pests, Reporting and recordkeeping requirements.

Dated: March 12, 2009.

Lois Rossi,

Director, Registration Division, Office of Pesticide Programs.

[FR Doc. E9–6265 Filed 3–24–09; 8:45 am]

BILLING CODE 6560–50–S

ENVIRONMENTAL PROTECTION AGENCY

[EPA–HQ–OPP–2009–0169; FRL–8405–6]

Chloroxylenol, Zinc, Zinc Salts, and Zeolites Registration Review; Antimicrobial Pesticide Dockets Opened for Review and Comment

AGENCY: Environmental Protection Agency (EPA).

ACTION: Notice.

SUMMARY: EPA has established registration review dockets for the pesticides listed in the table in Unit III.A. With this document, EPA is opening the public comment period for these registration reviews. Registration review is EPA's periodic review of pesticide registrations to ensure that each pesticide continues to satisfy the statutory standard for registration, that is, the pesticide can perform its intended function without unreasonable adverse effects on human health or the environment. Registration review dockets contain information that will assist the public in understanding the types of information and issues that the Agency may consider during the course of registration reviews. Through this program, EPA is ensuring that each pesticide's registration is based on current scientific and other knowledge, including its effects on human health and the environment.

DATES: Comments must be received on or before June 23, 2009.

ADDRESSES: Submit your comments identified by the docket identification (ID) number for the specific pesticide of interest provided in the table in Unit III.A., by one of the following methods:

• *Federal eRulemaking Portal*: *http://www.regulations.gov*. Follow the on-line instructions for submitting comments.

• *Mail*: Office of Pesticide Programs (OPP) Regulatory Public Docket (7502P), Environmental Protection Agency, 1200 Pennsylvania Ave., NW., Washington, DC 20460–0001.

• *Delivery*: OPP Regulatory Public Docket (7502P), Environmental Protection Agency, Rm. S–4400, One Potomac Yard (South Bldg.), 2777 S. Crystal Dr., Arlington, VA. Deliveries are only accepted during the Docket Facility's normal hours of operation (8:30 a.m. to 4 p.m., Monday through Friday, excluding legal holidays). Special arrangements should be made for deliveries of boxed information. The Docket Facility telephone number is (703) 305–5805.

Instructions: Direct your comments to the docket ID numbers listed in the table in Unit III.A. for the pesticides you are commenting on. EPA's policy is that all comments received will be included in the docket without change and may be made available on-line at *http://www.regulations.gov*, including any personal information provided, unless the comment includes information claimed to be Confidential Business Information (CBI) or other information whose disclosure is restricted by statute. Do not submit information that you consider to be CBI or otherwise protected through regulations.gov or e-mail. The regulations.gov website is an ''anonymous access'' system, which means EPA will not know your identity or contact information unless you

provide it in the body of your comment. If you send an e-mail comment directly to EPA without going through regulations.gov, your e-mail address will be automatically captured and included as part of the comment that is placed in the docket and made available on the Internet. If you submit an electronic comment, EPA recommends that you include your name and other contact information in the body of your comment and with any disk or CD-ROM you submit. If EPA cannot read your comment due to technical difficulties and cannot contact you for clarification, EPA may not be able to consider your comment. Electronic files should avoid the use of special characters, any form of encryption, and be free of any defects or viruses.

Docket: All documents in the docket are listed in the docket index available at *http://www.regulations.gov*. Although listed in the index, some information is not publicly available, e.g., CBI or other information whose disclosure is restricted by statute. Certain other material, such as copyrighted material, is not placed on the Internet and will be publicly available only in hard copy form. Publicly available docket materials are available either in the electronic docket at *http://www.regulations.gov*, or, if only available in hard copy, at the OPP Regulatory Public Docket in Rm. S–4400, One Potomac Yard (South Bldg.), 2777 S. Crystal Dr., Arlington, VA. The hours of operation of this Docket Facility are from 8:30 a.m. to 4 p.m., Monday through Friday, excluding legal holidays. The Docket Facility telephone number is (703) 305–5805.

FOR FURTHER INFORMATION CONTACT: *For pesticide specific information contact*: The Chemical Review Manager identified in the table in Unit III.A. for the pesticide of interest.

For general information on antimicrobial chemicals contact: Diane Isbell, Antimicrobials Division (7510P), Office of Pesticide Programs, Environmental Protection Agency, 1200 Pennsylvania Ave., NW., Washington, DC 20460–0001; telephone number: (703) 308–8154; fax number: (703) 308–8090; e-mail address: *isbell.diane@epa.gov*.

SUPPLEMENTARY INFORMATION:

I. General Information

A. Does this Action Apply to Me?

This action is directed to the public in general, and may be of interest to a wide range of stakeholders including environmental, human health, farmworker, and agricultural advocates; the chemical industry; pesticide users; and members of the public interested in the sale, distribution, or use of pesticides. Since others also may be interested, the Agency has not attempted to describe all the specific entities that may be affected by this action. If you have any questions regarding the applicability of this action to a particular entity, consult the person listed under **FOR FURTHER INFORMATION CONTACT**.

B. What Should I Consider as I Prepare My Comments for EPA?

1. *Submitting CBI*. Do not submit this information to EPA through regulations.gov or e-mail. Clearly mark the part or all of the information that you claim to be CBI. For CBI information in a disk or CD-ROM that you mail to EPA, mark the outside of the disk or CD-ROM as CBI and then identify electronically within the disk or CD-ROM the specific information that is claimed as CBI. In addition to one complete version of the comment that includes information claimed as CBI, a copy of the comment that does not contain the information claimed as CBI must be submitted for inclusion in the public docket. Information so marked will not be disclosed except in accordance with procedures set forth in 40 CFR part 2.

2. *Tips for preparing your comments*. When submitting comments, remember to:

i. Identify the document by docket ID number and other identifying information (subject heading, **Federal Register** date and page number).

ii. Follow directions. The Agency may ask you to respond to specific questions or organize comments by referencing a Code of Federal Regulations (CFR) part or section number.

iii. Explain why you agree or disagree; suggest alternatives and substitute language for your requested changes.

iv. Describe any assumptions and provide any technical information and/or data that you used.

v. If you estimate potential costs or burdens, explain how you arrived at your estimate in sufficient detail to allow for it to be reproduced.

vi. Provide specific examples to illustrate your concerns and suggest alternatives.

vii. Explain your views as clearly as possible, avoiding the use of profanity or personal threats.

viii. Make sure to submit your comments by the comment period deadline identified.

3. *Environmental justice*. EPA seeks to achieve environmental justice, the fair treatment and meaningful involvement of any group, including minority and/or low income populations, in the development, implementation, and enforcement of environmental laws, regulations, and policies. To help address potential environmental justice issues, the Agency seeks information on any groups or segments of the population who, as a result of their location, cultural practices, or other factors, may have atypical or disproportionately high and adverse human health impacts or environmental effects from exposure to the pesticide discussed in this document, compared to the general population.

II. Authority

EPA is initiating its reviews of the pesticides identified in this document pursuant to section 3(g) of the Federal Insecticide, Fungicide, and Rodenticide Act (FIFRA) and the Procedural Regulations for Registration Review at 40 CFR part 155, subpart C. Section 3(g) of FIFRA provides, among other things, that the registrations of pesticides are to be reviewed every 15 years. Under FIFRA section 3(a), a pesticide product may be registered or remain registered only if it meets the statutory standard for registration given in FIFRA section 3(c)(5). When used in accordance with widespread and commonly recognized practice, the pesticide product must perform its intended function without unreasonable adverse effects on the environment; that is, without any unreasonable risk to man or the environment, or a human dietary risk from residues that result from the use of a pesticide in or on food.

III. Registration Reviews

A. What Action is the Agency Taking?

As directed by FIFRA section 3(g), EPA is reviewing the pesticide registrations identified in the table in this unit to assure that they continue to satisfy the FIFRA standard for registration—that is, they can still be used without unreasonable adverse effects on human health or the environment. A pesticide's registration review begins when the Agency establishes a docket for the pesticide's registration review case and opens the docket for public review and comment. At present, EPA is opening registration review dockets for the cases identified in the following table.

TABLE—REGISTRATION REVIEW DOCKETS OPENING

Registration Review Case Name and Number	Docket ID Number	Chemical Review Manager, Telephone Number, E-mail Address
Zinc, Zinc Salts, and Zeolites, 4099	EPA–HQ–OPP–2009–0011	Eliza Blair, (703-308-7279), blair.eliza@epa.gov
Chloroxylenol, 3045	EPA–HQ–OPP–2009–0010	Eliza Blair, (703-308-7279), blair.eliza@epa.gov

B. Docket Content

1. *Review dockets*. The registration review dockets contain information that the Agency may consider in the course of the registration review. The Agency may include information from its files including, but not limited to, the following information:

• An overview of the registration review case status.

• A list of current product registrations and registrants.

• **Federal Register** notices regarding any pending registration actions.

• **Federal Register** notices regarding current or pending tolerances.

• Risk assessments.

• Bibliographies concerning current registrations.

• Summaries of incident data.

• Any other pertinent data or information.

Each docket contains a document summarizing what the Agency currently knows about the pesticide case and a preliminary work plan for anticipated data and assessment needs. Additional documents provide more detailed information. During this public comment period, the Agency is asking that interested persons identify any additional information they believe the Agency should consider during the registration reviews of these pesticides. The Agency identifies in each docket the areas where public comment is specifically requested, though comment in any area is welcome.

2. *Other related information*. More information on these cases, including the active ingredients for each case, may be located in the registration review schedule on the Agency's website at *http://www.epa.gov/oppsrrd1/registration_review/schedule.htm*. Information on the Agency's registration review program and its implementing regulation may be seen at *http://www.epa.gov/oppsrrd1/registration_review*.

3. *Information submission requirements*. Anyone may submit data or information in response to this document. To be considered during a pesticide's registration review, the submitted data or information must meet the following requirements:

• To ensure that EPA will consider data or information submitted, interested persons must submit the data or information during the comment period. The Agency may, at its discretion, consider data or information submitted at a later date.

• The data or information submitted must be presented in a legible and useable form. For example, an English translation must accompany any material that is not in English and a written transcript must accompany any information submitted as an audiographic or videographic record. Written material may be submitted in paper or electronic form.

• Submitters must clearly identify the source of any submitted data or information.

• Submitters may request the Agency to reconsider data or information that the Agency rejected in a previous review. However, submitters must explain why they believe the Agency should reconsider the data or information in the pesticide's registration review.

• As provided in 40 CFR 155.58, the registration review docket for each pesticide case will remain publicly accessible through the duration of the registration review process; that is, until all actions required in the final decision on the registration review case have been completed.

List of Subjects

Environmental protection, Pesticides and pests, antimicrobials, Chloroxylenol, Zinc, Zinc salts, and Zeolites.

Dated: March 12, 2009.

Joan Harrigan-Farrelly,

Director, Antimicrobials Division, Office of Pesticide Programs.

[FR Doc. E9–6270 Filed 3–24–09; 8:45 am]

BILLING CODE 6560–50–S

ENVIRONMENTAL PROTECTION AGENCY

[EPA–HQ–OPP–2009–0095; FRL–8405–7]

Registration Review; New Biopesticides Dockets Opened for Review and Comment

AGENCY: Environmental Protection Agency (EPA).

ACTION: Notice.

SUMMARY: EPA has established registration review dockets for the pesticides listed in the table in Unit III.A. With this document, EPA is opening the public comment period for these registration reviews. Registration review is EPA's periodic review of pesticide registrations to ensure that each pesticide continues to satisfy the statutory standard for registration, that is, the pesticide can perform its intended function without unreasonable adverse effects on human health or the environment. Registration review dockets contain information that will assist the public in understanding the types of information and issues that the Agency may consider during the course of registration reviews. Through this program, EPA is ensuring that each pesticide's registration is based on current scientific and other knowledge, including its effects on human health and the environment.

DATES: Comments must be received on or before May 26, 2009.

ADDRESSES: Submit your comments identified by the docket identification (ID) number for the specific pesticide of interest provided in the table in Unit III.A., by one of the following methods:

• *Federal eRulemaking Portal*: *http://www.regulations.gov*. Follow the on-line instructions for submitting comments.

• *Mail*: Office of Pesticide Programs (OPP) Regulatory Public Docket (7502P), Environmental Protection Agency, 1200 Pennsylvania Ave., NW., Washington, DC 20460–0001.

• *Delivery*: OPP Regulatory Public Docket (7502P), Environmental Protection Agency, Rm. S–4400, One Potomac Yard (South Bldg.), 2777 S. Crystal Dr., Arlington, VA. Deliveries are only accepted during the Docket

Facility's normal hours of operation (8:30 a.m. to 4 p.m., Monday through Friday, excluding legal holidays). Special arrangements should be made for deliveries of boxed information. The Docket Facility telephone number is (703) 305–5805.

Instructions: Direct your comments to the docket ID numbers listed in the table in Unit III.A. for the pesticides you are commenting on. EPA's policy is that all comments received will be included in the docket without change and may be made available on-line at *http://www.regulations.gov*, including any personal information provided, unless the comment includes information claimed to be Confidential Business Information (CBI) or other information whose disclosure is restricted by statute. Do not submit information that you consider to be CBI or otherwise protected through regulations.gov or e-mail. The regulations.gov website is an ''anonymous access'' system, which means EPA will not know your identity or contact information unless you provide it in the body of your comment. If you send an e-mail comment directly to EPA without going through regulations.gov, your e-mail address will be automatically captured and included as part of the comment that is placed in the docket and made available on the Internet. If you submit an electronic comment, EPA recommends that you include your name and other contact information in the body of your comment and with any disk or CD-ROM you submit. If EPA cannot read your comment due to technical difficulties and cannot contact you for clarification, EPA may not be able to consider your comment. Electronic files should avoid the use of special characters, any form of encryption, and be free of any defects or viruses.

Docket: All documents in the docket are listed in the docket index available at *http://www.regulations.gov*. Although listed in the index, some information is not publicly available, e.g., CBI or other information whose disclosure is restricted by statute. Certain other material, such as copyrighted material, is not placed on the Internet and will be publicly available only in hard copy form. Publicly available docket materials are available either in the electronic docket at *http://www.regulations.gov*, or, if only available in hard copy, at the OPP Regulatory Public Docket in Rm. S–4400, One Potomac Yard (South Bldg.), 2777 S. Crystal Dr., Arlington, VA. The hours of operation of this Docket Facility are from 8:30 a.m. to 4 p.m., Monday through Friday, excluding legal holidays. The Docket Facility telephone number is (703) 305–5805.

FOR FURTHER INFORMATION CONTACT: *For pesticide specific information contact*: The Regulatory Action Leader (RAL) identified in the table in Unit III.A. for the pesticide of interest.

For general information contact: Kevin Costello, Special Review and Reregistration Division (7508P), Office of Pesticide Programs, Environmental Protection Agency, 1200 Pennsylvania Ave., NW., Washington, DC 20460–0001; telephone number: (703) 305–5026; fax number: (703) 308–8090; e-mail address: *costello.kevin @epa.gov*.

SUPPLEMENTARY INFORMATION:

I. General Information

A. Does this Action Apply to Me?

This action is directed to the public in general, and may be of interest to a wide range of stakeholders including environmental, human health, farmworker, and agricultural advocates; the chemical industry; pesticide users; and members of the public interested in the sale, distribution, or use of pesticides. Since others also may be interested, the Agency has not attempted to describe all the specific entities that may be affected by this action. If you have any questions regarding the applicability of this action to a particular entity, consult the person listed under **FOR FURTHER INFORMATION CONTACT**.

B. What Should I Consider as I Prepare My Comments for EPA?

1. *Submitting CBI*. Do not submit this information to EPA through regulations.gov or e-mail. Clearly mark the part or all of the information that you claim to be CBI. For CBI information in a disk or CD-ROM that you mail to EPA, mark the outside of the disk or CD-ROM as CBI and then identify electronically within the disk or CD-ROM the specific information that is claimed as CBI. In addition to one complete version of the comment that includes information claimed as CBI, a copy of the comment that does not contain the information claimed as CBI must be submitted for inclusion in the public docket. Information so marked will not be disclosed except in accordance with procedures set forth in 40 CFR part 2.

2. *Tips for preparing your comments*. When submitting comments, remember to:

i. Identify the document by docket ID number and other identifying information (subject heading, **Federal Register** date and page number).

ii. Follow directions. The Agency may ask you to respond to specific questions or organize comments by referencing a Code of Federal Regulations (CFR) part or section number.

iii. Explain why you agree or disagree; suggest alternatives and substitute language for your requested changes.

iv. Describe any assumptions and provide any technical information and/or data that you used.

v. If you estimate potential costs or burdens, explain how you arrived at your estimate in sufficient detail to allow for it to be reproduced.

vi. Provide specific examples to illustrate your concerns and suggest alternatives.

vii. Explain your views as clearly as possible, avoiding the use of profanity or personal threats.

viii. Make sure to submit your comments by the comment period deadline identified.

3. *Environmental justice*. EPA seeks to achieve environmental justice, the fair treatment and meaningful involvement of any group, including minority and/or low income populations, in the development, implementation, and enforcement of environmental laws, regulations, and policies. To help address potential environmental justice issues, the Agency seeks information on any groups or segments of the population who, as a result of their location, cultural practices, or other factors, may have atypical or disproportionately high and adverse human health impacts or environmental effects from exposure to the pesticide(s) discussed in this document, compared to the general population.

II. Authority

EPA is initiating its reviews of the pesticides identified in this document pursuant to section 3(g) of the Federal Insecticide, Fungicide, and Rodenticide Act (FIFRA) and the Procedural Regulations for Registration Review at 40 CFR part 155, subpart C. Section 3(g) of FIFRA provides, among other things, that the registrations of pesticides are to be reviewed every 15 years. Under FIFRA section 3(a), a pesticide product may be registered or remain registered only if it meets the statutory standard for registration given in FIFRA section 3(c)(5). When used in accordance with widespread and commonly recognized practice, the pesticide product must perform its intended function without unreasonable adverse effects on the environment; that is, without any unreasonable risk to man or the environment, or a human dietary risk from residues that result from the use of a pesticide in or on food.

III. Registration Reviews

A. What Action is the Agency Taking?

As directed by FIFRA section 3(g), EPA is reviewing the pesticide registrations identified in the table in this unit to assure that they continue to satisfy the FIFRA standard for registration - that is, they can still be used without unreasonable adverse effects on human health or the environment. A pesticide's registration review begins when the Agency establishes a docket for the pesticide's registration review case and opens the docket for public review and comment. At present, EPA is opening registration review dockets for the cases identified in the following table.

TABLE—REGISTRATION REVIEW DOCKETS OPENING

Registration Review Case Name and Number	Docket ID Number	RAL, Telephone Number, E-mail Address
Garlic Oil; Case 4007	EPA–HQ–OPP–2009–0113	Cheryl Greene, (703) 308–0352; *greene.cheryl@epa.gov*
Capsaicin; Case 4018	EPA–HQ–OPP–2009–0121	Chris Pfeifer, (703) 308–0031; *pfeifer.chris@epa.gov*

B. Docket Content

1. *Review dockets.* The registration review dockets contain information that the Agency may consider in the course of the registration review. The Agency may include information from its files including, but not limited to, the following information:

- An overview of the registration review case status.
- A list of current product registrations and registrants.
- **Federal Register** notices regarding any pending registration actions.
- **Federal Register** notices regarding current or pending tolerances.
- Risk assessments.
- Bibliographies concerning current registrations.
- Summaries of incident data.
- Any other pertinent data or information.

Each docket contains a document summarizing what the Agency currently knows about the pesticide case and a preliminary work plan for anticipated data and assessment needs. Additional documents provide more detailed information. During this public comment period, the Agency is asking that interested persons identify any additional information they believe the Agency should consider during the registration reviews of these pesticides. The Agency identifies in each docket the areas where public comment is specifically requested, though comment in any area is welcome.

2. *Other related information.* More information on these cases, including the active ingredients for each case, may be located in the registration review schedule on the Agency's website at *http://www.epa.gov/oppsrrd1/registration_review/schedule.htm.* Information on the Agency's registration review program and its implementing regulation may be seen at *http://www.epa.gov/oppsrrd1/registration_review.*

3. *Information submission requirements.* Anyone may submit data or information in response to this document. To be considered during a pesticide's registration review, the submitted data or information must meet the following requirements:

- To ensure that EPA will consider data or information submitted, interested persons must submit the data or information during the comment period. The Agency may, at its discretion, consider data or information submitted at a later date.
- The data or information submitted must be presented in a legible and useable form. For example, an English translation must accompany any material that is not in English and a written transcript must accompany any information submitted as an audiographic or videographic record. Written material may be submitted in paper or electronic form.
- Submitters must clearly identify the source of any submitted data or information.
- Submitters may request the Agency to reconsider data or information that the Agency rejected in a previous review. However, submitters must explain why they believe the Agency should reconsider the data or information in the pesticide's registration review.
- As provided in 40 CFR 155.58, the registration review docket for each pesticide case will remain publicly accessible through the duration of the registration review process; that is, until all actions required in the final decision on the registration review case have been completed.

List of Subjects

Environmental protection, Pesticides and pests.

Dated: March 6, 2009.

Janet L. Andersen,

Director, Biopesticides and Pollution Prevention Division, Office of Pesticide Programs.

[FR Doc. E9–5621 Filed 3–24–09; 8:45 am]

BILLING CODE 6560–50–S

ENVIRONMENTAL PROTECTION AGENCY

[EPA–HQ–OPP–2008–0075; FRL–8398–3]

Pirimicarb, Iprodione, Amides, Boscalid, Pyraclostrobin, Mefenoxam, Propyzamide (Pronamide), Pirimiphos-methyl, Thiobencarb, 1,2-benzisothiazolin-3-one, Fludioxonil, Esfenvalerate; Withdrawal of Tolerance Petitions

AGENCY: Environmental Protection Agency (EPA).

ACTION: Notice.

SUMMARY: Notice is being provided that the following petitions (PP# 0E6102, 1E6427, 2E6388, 2E6509, 4E6868, 5E7013, 5E7014, 5F7018, 6E7047, 6E7048, 6E7056, 6E7164, 6E7165, 7E7213, 7E7309, 7E7238, 7F7295 and 9E5075) to establish pesticide tolerances under the Federal Food, Drug, and Cosmetic Act (FFDCA), 21 U.S.C. 346a, have been withdrawn by the petitioners.

FOR FURTHER INFORMATION CONTACT: Laura Nollen, Registration Division (7505P), Environmental Protection Agency, 1200 Pennsylvania Ave., NW., Washington, DC 20460–0001; telephone number: (703) 305–7390; fax number: (703) 305–0599; e-mail address: *nollen.laura@epa.gov.*

SUPPLEMENTARY INFORMATION:

I. General Information

A. Does this Notice Apply to Me?

Although EPA regulations permit tolerance petitions to be withdrawn by the petitioner, notice is being provided

to the public in general. Since various individuals or entities may be interested, the Agency has not attempted to describe all the specific entities that may be interested in this action. If you have any questions regarding this action, please consult the person listed under **FOR FURTHER INFORMATION CONTACT**.

B. How Can I Access Electronic Copies of this Document?

1. *Docket*. EPA has established a docket for this notice under docket identification (ID) number EPA–HQ–OPP–2008–0075. Publicly available docket materials are available either in the electronic docket at *http://www.regulations.gov*, or, if only available in hard copy, at the Office of Pesticide Programs (OPP) Regulatory Public Docket in Rm. S–4400, One Potomac Yard (South Bldg.), 2777 S. Crystal Dr., Arlington, VA. The hours of operation of this Docket Facility are from 8:30 a.m. to 4 p.m., Monday through Friday, excluding legal holidays. The Docket Facility telephone number is (703) 305–5805.

2. *Electronic access*. You may access this **Federal Register** document electronically through the EPA Internet under the **Federal Register** listings at *http://www.epa.gov/fedrgstr*.

II. What Action is the Agency Taking?

Under section 408(d) of the FFDCA, 21 U.S.C. 346a , EPA is authorized to establish tolerances for pesticide residues in or on food based on a petition from any person. Ordinarily, EPA resolves these petitions either by granting or denying them (21 U.S.C. 346a(d)(4)). EPA's regulations, however, allow petitions to be withdrawn by the petitioner without prejudice to refiling the petition at a later date (40 CFR 180.8). EPA has received notifications from various petitioners withdrawing, partially or completely, the following tolerances: PP 0E6102, 1E6427, 2E6388, 2E6509, 4E6868, 5E7013, 5E7014, 5F7018, 6E7047, 6E7048, 6E7056, 6E7164, 6E7165, 7E7213, 7E7309, 7E7238, 7F7295 and 9E5075. By this action, EPA is providing the general public with notice that the above-cited petitions have been withdrawn by the petitioners. The petitioners may refile these petitions in the future without prejudice. The petitions and the withdrawal notifications are described below.

A. PP 0E61012; PP 2E6388; PP 2E6509 (pirimicarb)

EPA issued a notice in the **Federal Register** of July 12, 2006 (71 FR 39315) (FRL–8075–1), which announced the submission of pesticide petitions (PP 2E6388; PP 2E6509; and PP 0E6102) (EPA–HQ–OPP–2006–0512) by the Interregional Research Project No. 4 (IR-4), 500 College Rd. East, Suite 201W, Princeton, NJ 08540. These petitions requested that EPA amend 40 CFR part 180 by establishing tolerances for residues of the insecticide 2-(dimethylamino)-5,6-dimethyl-4-pyrimidinyl dimethylcarbamate (9Cl) and its two carbamate metabolites: desmethyl pirimicarb and desmethylformamido pirimicarb, expressed as desmethyl pirimicarb in or on the following food commodities: PP 2E6388 proposed to establish a tolerance for asparagus at 0.01 parts per million (ppm). PP 2E6509 proposed to establish a tolerance for leafy petioles subgroup at 1.0 ppm. PP 0E6102 proposed to establish a tolerance for hops at 4.0 ppm. On May 30, 2008, IR-4 notified EPA that it was withdrawing these three petitions.

B. PP 1E6427 (iprodione)

EPA issued a notice in the **Federal Register** of August 2, 2006 (71 FR 43760) (FRL–8082–8), which announced the submission of a pesticide petition (PP 1E6427) (EPA–HQ–OPP–2006–0637) by IR-4. This petition requested that EPA amend 40 CFR 180.399 by establishing tolerances for residues of the fungicide iprodione [3-(3,5-dichlorophenyl)-N-(1-methylethyl)-2,4-dioxo-1-imidazolidinecarboxamide, its isomer 3-(1-methylethyl)-N-(3,5-dichlorophenyl)-2,4-dioxo-1-imidazolidinecarboxamide, and its metabolite 3-(3,5-dichlorophenyl)-2,4-dioxo-1-imidazolidinecarboxamide in or on the food commodity pistachio at 0.20 ppm. On July 9, 2008, IR-4 notified EPA that it was withdrawing this petition.

C. PP 4E6868 (amides)

EPA issued a notice in the **Federal Register** of December 9, 2004 (69 FR 71405) (FRL–7687–8), which announced the submission of a pesticide petition (PP 4E6868) (EPA–HQ–OPP–2004–0386) by Cognis Corporation, 4900 Este Avenue, Cincinnati, OH 45234. This petition proposed that EPA amend 40 CFR 180.960 by establishing an exemption from the requirement of a tolerance for residues of amides, from acetic acid, C5-9 carboxylic acids and diethylenetriamine-ethyleneimine polymer (CAS Reg. No. 192230–19–6) in or on all raw agricultural commodities when used as an inert ingredient in the pesticide formulations. On March 22, 2005, Cognis Corporation notified EPA that it was withdrawing this petition.

D. PP 5E7013 (boscalid)

EPA issued a notice in the **Federal Register** of June 14, 2006 (71 FR 34342) (FRL–8070–8), which announced the submission of a pesticide petition (PP 5E7013) (EPA–HQ–OPP–2005–0145) by IR-4. This petition requested that EPA amend 40 CFR 180.589 by establishing tolerances for residues of the fungicide boscalid; 3-pyridinecarboxamide, 2-chloro-N-(4'-chloro(1,1'-biphenyl)-2-yl) in or on the food commoditiy Belgian endive at 12.0 ppm. IR-4 additionally proposed to increase the established tolerances for boscalid in or on the raw agricultural commodities: Fruit, pome, crop group 11, to include postharvest use at 8.0 ppm; and fruit, stone, crop group 12, to include postharvest use, at 9.0 ppm. On January 3, 2007, IR-4 notified EPA that it was withdrawing the post-harvest uses of boscalid on Fruit, pome, crop group 11 and Fruit, Stone, crop group 12 from this petition. On March 27, 2008, IR-4 notified EPA that it was withdrawing the endive, Belgian tolerance from this petition; thereby withdrawing the entire petition.

E. PP 5E7014 (pyraclostrobin)

EPA issued a notice in the **Federal Register** of July 5, 2006 (71 FR 38150) (FRL–8074–2), which announced the submission of a pesticide petition (PP 5E7014) (EPA–HQ–OPP–2006–0522) by IR-4. This petition requested that EPA amend 40 CFR 180.582 by establishing tolerances for residues of the fungicide, pyraclostrobin, carbamic acid, [2-[[[1-(4-chlorophenyl)-1H-pyrazol-3-yl]oxy]methyl]phenyl]methoxy-, methyl ester and its metabolite methyl-N-[[[1-(4-chlorophenyl) pyrazol-3yl]oxy]otolyl]carbamate (BF 500-3); expressed as parent compound in or on food commodities: Endive, Belgian, at 11 ppm; fruit, pome, group 11, at 6.5 ppm; and fruit, stone, group 12 at 11 ppm. On January 3, 2007, IR-4 notified EPA that it was withdrawing the postharvest uses of pyraclostrobin on fruit, pome, crop group 11 and fruit, ftone, crop group 12 from this petition. On March 27, 2008, IR-4 notified EPA that it was withdrawing the endive, Belgian tolerance from this petition; thereby withdrawing the entire petition.

F. PP 5F7018 (mefenoxam)

EPA issued a notice in the **Federal Register** of June 21, 2007 (71 FR 35671) (FRL–8063–8), which announced the submission of a pesticide petition (PP 5F7018) (EPA–HQ–OPP–2006–0096) by Syngenta Crop Protection, P.O. Box 18300, Greensboro, NC 27409. This petition requested that EPA amend 40 CFR 180.546 by establishing a regional

tolerance (East of the Mississippi River) for residues of the fungicide mefenoxam in or on food commodities bean, succulent shelled at 0.03 ppm; and a national tolerance in or on food commodities turnip, greens at 5.0 ppm. On December 3, 2007, Syngenta Crop Protection notified EPA that it was withdrawing the petition.

G. PP 6E7047; PP 6E7048 (propyzamide; pronamide)

EPA issued a notice in the **Federal Register** of May 9, 2007 (72 FR 26375) (FRL–8128–1), which announced the submission of pesticide petitions (PP 6E7074 and PP 6E7075) (EPA–HQ–OPP–2007–0189) by IR-4. These petitions requested that EPA amend 40 CFR 180.317 by establishing tolerances for residues of the herbicide propyzamide (pronamide) and its metabolite containing the 3,5-dichlorobenzoyl moiety and calculated as 3,5-dichloro-N-(1,1-dimethyl-2-propynyl) benzamide in or on food commodities: Chicory roots at 0.2 ppm; chicory tops at 2.0 ppm; endive, Belgium at 2.0 ppm; and dandelion, leaves at 2.0 ppm (PP 6E7047); and Berry group 13 at 0.05 ppm (PP 6E7048). On March 10, 2008, IR-4 notified EPA that it was withdrawing the petitions.

H. PP 6E7056 (pirimiphos-methyl)

EPA issued a notice in the **Federal Register** of May 10, 2006 (71 FR 27245) (FRL–8067–7), which announced the submission of a pesticide petition (PP 6E7056) (EPA–HQ–OPP–2006–0334) by IR-4. This petition requested that EPA amend 40 CFR 180.409 by establishing tolerances for residues of the insecticide pirimiphos-methyl in or on sunflower seeds at 10 ppm. On January 30, 2008, IR-4 notified EPA that it was withdrawing the petition.

I. PP 6E7164 (boscalid)

EPA issued a notice in the **Federal Register** of April 4, 2007 (72 FR 16352) (FRL–8119–2), which announced the submission of a pesticide petition (PP 6E7164) (EPA–HQ–OPP–2007–0115) by IR-4. This petition requested that EPA amend 40 CFR 180.589 by establishing tolerances for residues of the fungicide boscalid, (BAS 510F), 3-pyridinecarboxamide, 2-chloro-N-(4'-chloro(1,1'-biphenyl)-2-yl) in or on food commodities avocado at 1.5 ppm; sapote, black at 1.5 ppm; canistel at 1.5 ppm; sopote, mamey at 1.5 ppm; mango at 1.5 ppm; papaya at 1.5 ppm; sapodilla at 1.5 ppm; star apple at 1.5 ppm; and herbs, fresh, subgroup 19A at 60.0 ppm. On February 6, 2008, IR-4 notified EPA that it was withdrawing the Herbs, fresh, subgroup 19A tolerance from this petition.

J. PP 6E7165 (pyraclostrobin)

EPA issued a notice in the **Federal Register** of April 4, 2007 (72 FR 16352) (FRL–8119–2), which announced the submission of a pesticide petition (PP 6E7165) (EPA–HQ–OPP–2007–0117) by IR-4. This petition requested that EPA amend 40 CFR 180.582 by establishing tolerances for residues of the fungicide pyraclostrobin, (carbamic acid, [2-[[[1-(4-chlorophenyl)-1H-pyrazol-3-yl]oxy]methyl] phenyl]methoxy-,methyl ester) and its metabolite (methyl-N-[[[1-(4-chlorophenyl) pyrazol-3-yl]oxy]o-tolyl] carbamate) (BF 500-3) expressed as parent compound in or on the food commodities: Herbs, fresh, subgroup 19A at 30.0 ppm; avocado at 0.7 ppm; mango at 0.7 ppm; papaya at 0.7 ppm; sapote, black at 0.7 ppm; sapote, mamey at 0.7 ppm; canistel at 0.7 ppm; sapodilla at 0.7 ppm; and star apple at 0.7 ppm. On February 6, 2008, IR-4 notified EPA that it was withdrawing the Herbs, fresh, subgroup 19A tolerance from this petition.

K. PP 7E7213 (thiobencarb)

EPA issued a notice in the **Federal Register** of August 22,2007 (72 FR 47010) (FRL– 8142-5), which announced the submission of pesticide petition (PP 7E7213) (EPA–HQ–OPP–2007–0472) by IR-4. This petition requested that EPA amend 40 CFR 180.401 by establishing tolerances for residues of the of the herbicide thiobencarb, (S-[(4-chlorophenyl)methyl]diethyl-carbamothioate) and its chlorobenzyl and chlorophenyl moiety-containing metabolites in or on food commodity rice, wild at 0.2 ppm. On December 19, 2008, IR-4 notified EPA that it was withdrawing this petition.

L. PP 7E7309 (1,2-benzisothiazolin-3-one)

EPA issued a notice in the **Federal Register** of February 6, 2008 (73 FR 6964) (FRL–8350–9), which announced the submission of a pesticide petition (PP 7E7309) (EPA–HQ–OPP–2008–0044) by Syngenta Crop Protection, P.O. Box 18300, Greensboro, NC 27409. This petition requested that EPA amend 40 CFR part 180 by establishing an exemption from the requirement of a tolerance under 40 CFR 180.910 for residues of 1,2-benzisothiazolin-3-one (BIT) as an inert ingredient in post-harvest applications at a maximum of 0.1% in an end-use product formulation. On October 31, 2008, Syngenta Crop Protection, notified EPA that it was withdrawing this petition.

M. PP 7E7238 (propyzamide; pronamide)

EPA issued a notice in the **Federal Register** of October 24, 2007 (72 FR 60369) (FRL–8150–8), which announced the submission of a pesticide petition (PP 7E7238) (EPA–HQ–OPP–2007–0189) by IR-4. This petition requested that EPA amend 40 CFR 180.317 by establishing tolerances for residues of the herbicide propyzamide (pronamide) and its metabolite containing the 3,5-dichlorobenzoyl moiety calculated as 3,5-dichloro-N-(1,1-dimethyl-2-propynyl) benzamide in or on food commodities bearberry at 1.0 ppm; bilberry at 1.0 ppm; blueberry, lowbush at 1.0 ppm; cloudberry at 1.0 ppm; cranberry at 1.0 ppm; lingonberry at 1.0 ppm; muntries at 1.0 ppm; and partridgeberry at 1.0 ppm. On September 26, 2008, IR-4 notified EPA that it was withdrawing this petition.

N. PP 7F7295 (fludioxonil)

EPA issued a notice in the **Federal Register** of July 9, 2008 (73 FR 39289) (FRL–8371–2), which announced the submission of a pesticide petition (PP 7F7295) (EPA–HQ–OPP–2008–0490) by Syngenta Crop Protection, Inc.. This petition requested that EPA amend 40 CFR 180.516 by establishing a tolerance for residues of the fungicide fludioxonil, 4-(2, 2-difluoro-1,3-benzodioxol-4-yl)-1Hpyrrole-3-carbonitrile, in or on food commodity raisins at 1.9 ppm. On December 3, 2008, Syngenta Crop Protection, Inc. notified EPA that it was withdrawing the petition.

O. PP 9E5075 (esfenvalerate)

EPA issued a notice in the **Federal Register** of September 13, 2006 (71 FR 54060) (FRL–8091–1), which announced the submission of a pesticide petition (PP 9E5075) (EPA–HQ–OPP–2006–0730) by IR-4. This petition requested that EPA amend 40 CFR 180.533 by establishing tolerances for residues of the insecticide esfenvalerate, ((S)-cyano-(3-phenoxyphenyl)methyl(S)-4-chloroalpha-(1-methylethyl) benzeneacetate) in or on oilseed crops; rapeseed (canola), seed; indian rapeseed; Indian mustard, seed; field mustard, seed; black mustard, seed; flax, seed; sunflower, seed; safflower, seed; borage, seed; and crambe at 0.3 ppm. On November 13, 2008, IR-4 notified EPA that it was withdrawing the petition.

III. Regulatory Assessment Requirements

This action provides notice that various tolerance petitioners have withdrawn, partially or completely, their petitions to establish tolerances. Under 40 CFR 180.8, petitioners are

authorized to take such action. Because EPA is merely providing notice of actions of outside parties, the regulatory assessment requirements imposed on rulemaking do not apply to this action.

List of Subjects

Environmental protection, Pesticides and pests.

Dated: March 3, 2009.

Lois Rossi,

Director, Registration Division, Office of Pesticide Programs.

[FR Doc. E9–6002 Filed 3–24–09; 8:45 am]

BILLING CODE 6560–50–S

FEDERAL ACCOUNTING STANDARDS ADVISORY BOARD

Meeting Schedule for 2010

AGENCY: Federal Accounting Standards Advisory Board.

ACTION: Notice.

Board Action: Pursuant to 31 U.S.C. 3511(d), the Federal Advisory CommitteeAct (Pub. L. No. 92–463), as amended, and the FASAB Rules Of Procedure, as amended in April, 2004, notice is hereby given that the Federal Accounting Standards Advisory Board (FASAB) will meet on the following dates in Room 7C13 of the U.S. Government Accountability Office (GAO) Building (441 G Street, NW.,) unless otherwise noted:

—Wednesday and Thursday, February 24 and 25, 2010.
—Wednesday and Thursday, April 28 and 29, 2010.
—Wednesday and Thursday, June 23 and 24, 2010.
—Wednesday and Thursday, August 25 and 26, 2010.
—Wednesday and Thursday, October 27 and 28, 2010.
—Thursday and Friday, December 16 and 17, 2010.

The purposes of the meetings are to discuss issues related to:

—FASAB's conceptual framework,
—Stewardship Reporting,
—Social Insurance,
—Natural Resources,
—Deferred Maintenance/Asset Impairment,
—Technical Agenda, and
—Any other topics as needed.

A more detailed agenda can be obtained from the FASAB Web site (*www.fasab.gov*) one week prior to each meeting.

Any interested person may attend the meetings as an observer. Board discussion and reviews are open to the public. GAO Building security requires advance notice of your attendance. Please notify FASAB of your planned attendance by calling 202–512–7350 at least one day prior to the respective meeting.

FOR FURTHER INFORMATION CONTACT: Wendy M. Payne, Executive Director, 441 G St., NW., Mail Stop 6K17V, Washington, DC 20548, or call (202) 512–7350.

Authority: Federal Advisory Committee Act, Public Law No. 92–463.

Dated: March 18, 2009.

Charles Jackson,

Federal Register Liaison Officer.

[FR Doc. E9–6344 Filed 3–24–09; 8:45 am]

BILLING CODE 1610–01–M

FEDERAL MARITIME COMMISSION

Notice of Agreements Filed

The Commission hereby gives notice of the filing of the following agreements under the Shipping Act of 1984. Interested parties may submit comments on agreements to the Secretary, Federal Maritime Commission, Washington, DC 20573, within ten days of the date this notice appears in the **Federal Register**. Copies of agreements are available through the Commission's Web site (*http://www.fmc.gov*) or contacting the Office of Agreements at (202)–523–5793 or *tradeanalysis@fmc.gov.*

Agreement No.: 011961–006.

Title: The Maritime Credit Agreement.

Parties: Alianca Navegacao e Logistica Ltda. & Cia; China Shipping Container Lines Co., Ltd.; CMA CGM, S.A.; Companhia Libra de Navegacao; Compania Libra de Navegacion Uruguay S.A.; Compania Sudamericana de Vapores, S.A.; COSCO Container Lines Company Limited; Dole Ocean Cargo Express; Hamburg-Süd; Hoegh Autoliners A/S; Independent Container Line Ltd.; Kawasaki Kisen Kaisha, Ltd.; Nippon Yusen Kaisha; Norasia Container Lines Limited; Safmarine Container Lines N.V.; Tropical Shipping & Construction Co., Ltd.; United Arab Shipping Company (S.A.G.); Wallenius Wilhelmsen Logistics AS; and Zim Integrated Shipping Services, Ltd.

Filing Party: Wayne R. Rohde, Esq.; Sher & Blackwell LLP; 1850 M Street, NW.; Suite 900; Washington, DC 20036.

Synopsis: The amendment deletes A.P. Moller-Maersk A/S as a party to the agreement.

Agreement No.: 012065.

Title: YMUK/CSCL Cross Slot Charter Agreement.

Parties: China Shipping Container Lines Co., Ltd.; China Shipping Container Lines (Hong Kong) Co., Ltd.; and Yang Ming (UK), Ltd.

Filing Party: Tara L. Leiter, Esq.; Blank Rome, LLP; Watergate; 600 New Hampshire Avenue, NW.; Washington, DC 20037.

Synopsis: The agreement authorizes the parties to share vessel space in the trade between U.S. Atlantic and Gulf ports and ports in Northern Europe and Mexico.

By Order of the Federal Maritime Commission.

Dated: March 20, 2009.

Tanga S. FitzGibbon,

Assistant Secretary.

[FR Doc. E9–6595 Filed 3–24–09; 8:45 am]

BILLING CODE 6730–01–P

FEDERAL MARITIME COMMISSION

Ocean Transportation Intermediary License Applicants

Notice is hereby given that the following applicants have filed with the Federal Maritime Commission an application for license as a Non-Vessel Operating Common Carrier and Ocean Freight Forwarder—Ocean Transportation Intermediary pursuant to section 19 of the Shipping Act of 1984 as amended (46 U.S.C. Chapter 409 and 46 CFR 515).

Persons knowing of any reason why the following applicants should not receive a license are requested to contact the Office of Transportation Intermediaries, Federal Maritime Commission,Washington, DC 20573.

Non-Vessel Operating Common Carrier Ocean Transportation Intermediary Applicants

Transbulk Shipping Lines Inc., 5850 Coral Ridge Drive, Ste. 308, Coral Springs, FL 33076, *Officer:* Carlos Durand, Director, (Qualifying Individual).

Evans, Wood & Caulfield, Inc. dba EWC Global Logistics, 100 North Centro Ave., #201, Rockville Centre, NY 11570, *Officers:* Patrick J. Caulfield, President, (Qualifying Individual), Valerie Caulfield, Exec. Vice President.

USA Logistic Services Inc., 950 Calcon Hook Rd., #1, Sharon Hill, PA 19079, *Officer:* Michael J. Boyce, Sr., President, (Qualifying Individual).

Unico Logistics USA, Inc., 10711 Walker Street, Cypress, CA 90630, *Officers:* Kevin Jung, Secretary, (Qualifying Individual), Dookee Kim, President.

S & B Forwarding Service Corp., 7490 NW 52 Street, Miami, FL 33166, *Officers:* Jorge A. Simosa, President,

(Qualifying Individual), Solomon J. Benson, Vice President.

Braid Logistics (North America) Inc., 5642 Shirley Lane, Houston, TX 77032, *Officer:* Lester Davies, Gen. Manager, (Qualifying Individual).

Non-Vessel Operating Common Carrier and Ocean Freight Forwarder Transportation Intermediary Applicants

SPI International Transportation (U.S.A.) Corp., dba Silver Pacific Global Logistics, SPI,International Transportation, 41661 Enterprise Circle North, Ste. 227, Temecula, CA 92590, *Officer:* Steven P. Rubin, Dir. U.S. Operations, (Qualifying Individual).

Sea Rank International, Inc., 15020 Bothell Way N.E., #100, Seattle, WA 98155, *Officer:* Samuel H. Chen, President, (Qualifying Individual).

MVP Global Logistics, LLC, 580 Chelsea Street, East Boston, MA 02128, *Officer:* Patricia Strong, Member, (Qualifying Individual).

Sifax Shipping Company, LLC, 14422 Sweeney Road, Houston, TX 77060, *Officers:* Karriem Wakkiluddin, Member/Manager, (Qualifying Individual), Clement Kembi, Member/Manager.

Centrix Logistics Inc., 3797 New Getwell Road, Memphis, TN 38118, *Officers:* Richard W. McDuffie, Sen. Vice President, (Qualifying Individual), H. J. Weathersby, President.

Consolidators International, Inc., dba Corrigans Express Freight Corporation, 8900 Bellanca Ave., Los Angeles, CA 90045, *Officer:* Julian Keeling, Chairman, (Qualifying Individual).

Mansard Shipping Ltd. dba Meyer Shipping, 1733 49th Street, Brooklyn, NY 11230, *Officers:* Morris Teichman, Vice President, Israel Meyer, Vice President, (Qualifying Individuals), David M. Weinberg, President.

T.V.L. Global Logistics Corp., 1990 Rosemead Blvd., Ste. 202, So. El Monte, CA 91733, *Officer:* Roberta Lee, Asst. Secretary, (Qualifying Individual).

W. K. Cargo Inc., 4079 NW 79th Ave., Miami, FL 33166, *Officer:* Andre R. Martins, President, (Qualifying Individual).

Mercury Logistics LLC, 10544 NW 26 Street, Doral, FL 3172, *Officers:* Marcelo R. Pose, Manager, (Qualifying Individual), Matilde E. Gomez, President.

Lionheart Project Logistics, Inc., 32938 Tamina Road, Ste. 102, Magnolia, TX 77354, *Officers:* Lothar H. Kammerer, President, (Qualifying Individual), Rose-Marie LeBel, Secretary.

AFC International, LLC, 975 Cobb Place Blvd., #101, Kennesaw, GA 30144, *Officer:* Anthony Scaturro, President, (Qualifying Individual).

Ocean Freight Forwarder—Ocean Transportation Intermediary Applicants

Pro-Service Forwarding Co., Inc., 901 West Hillcrest Blvd., Inglewood, CA 90301, *Officer:* Martin Rosenthal, Vice President, (Qualifying Individual).

Greenline Trade, LLC dba Greenline Logistics, 14205 S.E., 36th Street, Bellevue, WA 08006, *Officers:* Pille Mandla, Managing Director, (Qualifying Individual), Tamara V. Ullery, Member.

UTOC America, Inc., 2396 E. Pacifica Pl., Suite 200, Rancho Dominguez, CA 90220, *Officer:* Misa Nakayama, Vice Pres. Int'l. Logistics, (Qualifying Individual).

Dated: March 20, 2009.

Tanga S. FitzGibbon,

Assistant Secretary.

[FR Doc. E9–6592 Filed 3–24–09; 8:45 am]

BILLING CODE 6730–01–P

FEDERAL MARITIME COMMISSION

Ocean Transportation Intermediary License; Reissuance

Notice is hereby given that the following Ocean Transportation Intermediary license has been reissued by the Federal Maritime Commission pursuant to section 19 of the Shipping Act of 1984 (46 U.S.C. Chapter 409) and the regulations of the Commission pertaining to the licensing of Ocean Transportation Intermediaries, 46 CFR Part 515.

License No.	Name/address	Date reissued
020465NF	Express Cargo USA LLC,1675 York Avenue, #31B, New York, NY 10128	January 10, 2009.

Sandra L. Kusumoto,

Director, Bureau of Certification and Licensing.

[FR Doc. E9–6594 Filed 3–24–09; 8:45 am]

BILLING CODE 6730–01–P

FEDERAL RESERVE SYSTEM

Formations of, Acquisitions by, and Mergers of Bank Holding Companies

The companies listed in this notice have applied to the Board for approval, pursuant to the Bank Holding Company Act of 1956 (12 U.S.C. 1841 *et seq.*) (BHC Act), Regulation Y (12 CFR Part 225), and all other applicable statutes and regulations to become a bank holding company and/or to acquire the assets or the ownership of, control of, or the power to vote shares of a bank or bank holding company and all of the banks and nonbanking companies owned by the bank holding company, including the companies listed below.

The applications listed below, as well as other related filings required by the Board, are available for immediate inspection at the Federal Reserve Bank indicated. The applications also will be available for inspection at the offices of the Board of Governors. Interested persons may express their views in writing on the standards enumerated in the BHC Act (12 U.S.C. 1842(c)). If the proposal also involves the acquisition of a nonbanking company, the review also includes whether the acquisition of the nonbanking company complies with the standards in section 4 of the BHC Act (12 U.S.C. 1843). Unless otherwise noted, nonbanking activities will be conducted throughout the United States. Additional information on all bank holding companies may be obtained from the National Information Center website at *www.ffiec.gov/nic/*.

Unless otherwise noted, comments regarding each of these applications must be received at the Reserve Bank indicated or the offices of the Board of Governors not later than April 17, 2009.

A. Federal Reserve Bank of Richmond (A. Linwood Gill, III, Vice President) 701 East Byrd Street, Richmond, Virginia 23261-4528:

1. Randolph Bancshares, Inc., Asheboro, North Carolina; to become a bank holding company by acquiring 100 percent of the voting shares of Randolph Bank and Trust Company, Asheboro, North Carolina.

Board of Governors of the Federal Reserve System, March 20,2009.

Robert deV. Frierson,

Deputy Secretary of the Board.

[FR Doc. E9–6548 Filed 3–24–09; 8:45 am]

BILLING CODE 6210–01–S

FEDERAL RESERVE SYSTEM

Notice of Proposals to Engage in Permissible Nonbanking Activities or to Acquire Companies that are Engaged in Permissible Nonbanking Activities

The companies listed in this notice have given notice under section 4 of the Bank Holding Company Act (12 U.S.C. 1843) (BHC Act) and Regulation Y (12 CFR Part 225) to engage *de novo*, or to acquire or control voting securities or assets of a company, including the companies listed below, that engages either directly or through a subsidiary or other company, in a nonbanking activity that is listed in § 225.28 of Regulation Y (12 CFR 225.28) or that the Board has determined by Order to be closely related to banking and permissible for bank holding companies. Unless otherwise noted, these activities will be conducted throughout the United States.

Each notice is available for inspection at the Federal Reserve Bank indicated. The notice also will be available for inspection at the offices of the Board of Governors. Interested persons may express their views in writing on the question whether the proposal complies with the standards of section 4 of the BHC Act. Additional information on all bank holding companies may be obtained from the National Information Center website at *www.ffiec.gov/nic/*.

Unless otherwise noted, comments regarding the applications must be received at the Reserve Bank indicated or the offices of the Board of Governors not later than April 7, 2009.

A. Federal Reserve Bank of New York (Anne MacEwen, Bank Applications Officer) 33 Liberty Street, New York, New York 10045-0001:

1. Canandaigua National Corporation, Canandaigua, New York; to acquire Canandaigua National Trust Company of Florida, Sarasota, Florida, and thereby engage in trust company activities pursuant to section 225.28(b)(5) of Regulation Y.

B. Federal Reserve Bank of Chicago (Colette A. Fried, Assistant Vice President) 230 South LaSalle Street, Chicago, Illinois 60690-1414:

1. Marshall and Ilsley Corporation, Milwaukee, Wisconsin and M and I LLC, Milwaukee, Wisconsin; proposes to acquire, indirectly through M and I Investment Management Corp., all of the assets, liabilities and business of the Delta Asset Management Division of Berkeley Capital Management LLC, San Francisco, California, and thereby engage in financial and advisory activities pursuant to section 225.28(b)(6)(i) of Regulation Y.

Board of Governors of the Federal Reserve System, March 20, 2009.

Robert deV. Frierson,

Deputy Secretary of the Board.

[FR Doc. E9–6547 Filed 3–24–09; 8:45 am]

BILLING CODE 6210–01–S

FEDERAL TRADE COMMISSION

[File No. 001 0203]

National Association of Music Merchants, Inc.; Analysis of Agreement Containing Consent Order to Aid Public Comment

AGENCY: Federal Trade Commission.

ACTION: Proposed Consent Agreement.

SUMMARY: The consent agreement in this matter settles alleged violations of federal law prohibiting unfair or deceptive acts or practices or unfair methods of competition. The attached Analysis to Aid Public Comment describes both the allegations in the complaint and the terms of the consent order—embodied in the consent agreement—that would settle these allegations.

DATES: Comments must be received on or before April 2, 2009.

ADDRESSES: Interested parties are invited to submit written comments electronically or in paper form. Comments should refer to''NAMM, File No. 001 0203'' to facilitate the organization of comments. Please note that your comment—including your name and your state—will be placed on the public record of this proceeding, including on the publicly accessible FTC website, at (*http://www.ftc.gov/os/publiccomments.shtm*).

Because comments will be made public, they should not include any sensitive personal information, such as an individual's Social Security Number; date of birth; driver's license number or other state identification number, or foreign country equivalent; passport number; financial account number; or credit or debit card number. Comments also should not include any sensitive health information, such as medical records or other individually identifiable health information. In addition, comments should not include any ''[t]rade secret or any commercial or financial information which is obtained from any person and which is privileged or confidential. . .,'' as provided in Section 6(f) of the FTC Act, 15 U.S.C. 46(f), and Commission Rule 4.10(a)(2), 16 CFR 4.10(a)(2). Comments containing material for which confidential treatment is requested must be filed in paper form, must be clearly labeled ''Confidential,'' and must comply with FTC Rule 4.9(c).[1]

Because paper mail addressed to the FTC is subject to delay due to heightened security screening, please consider submitting your comments in electronic form. Comments filed in electronic form should be submitted by using the following weblink: (*https://secure.commentworks.com/ftc-NAMM*) (and following the instructions on the web-based form). To ensure that the Commission considers an electronic comment, you must file it on the web-based form at the weblink:(*https://secure.commentworks.com/ftc-NAMM*). If this Notice appears at (*http://www.regulations.gov/search/index.jsp*), you may also file an electronic comment through that website. The Commission will consider all comments that regulations.gov forwards to it. You may also visit the FTC website at *http://www.ftc.gov* to read the Notice and the news release describing it.

A comment filed in paper form should include the ''NAMM, File No. 001 0203'' reference both in the text and on the envelope, and should be mailed or delivered to the following address: Federal Trade Commission, Office of the Secretary, Room H-135, 600 Pennsylvania Avenue, NW, Washington, DC 20580. The FTC is requesting that any comment filed in paper form be sent by courier or overnight service, if possible, because U.S. postal mail in the Washington area and at the Commission is subject to delay due to heightened security precautions.

The Federal Trade Commission Act (''FTC Act'') and other laws the Commission administers permit the collection of public comments to consider and use in this proceeding as appropriate. The Commission will consider all timely and responsive public comments that it receives, whether filed in paper or electronic form. Comments received will be available to the public on the FTC

[1] FTC Rule 4.2(d), 16 CFR 4.2(d). The comment must be accompanied by an explicit request for confidential treatment, including the factual and legal basis for the request, and must identify the specific portions of the comment to be withheld from the public record. The request will be granted or denied by the Commission's General Counsel, consistent with applicable law and the public interest. *See* FTC Rule 4.9(c), 16 CFR 4.9(c).

website, to the extent practicable, at (*http://www.ftc.gov/os/publiccomments.shtm*). As a matter of discretion, the Commission makes every effort to remove home contact information for individuals from the public comments it receives before placing those comments on the FTC website. More information, including routine uses permitted by the Privacy Act, may be found in the FTC's privacy policy, at (*http://www.ftc.gov/ftc/privacy.shtm*).

FOR FURTHER INFORMATION CONTACT: William Lanning, Bureau of Competition, 600 Pennsylvania Avenue, NW, Washington, D.C. 20580, (202) 326-3361.

SUPPLEMENTARY INFORMATION: Pursuant to section 6(f) of the Federal Trade Commission Act, 38 Stat. 721, 15 U.S.C. 46(f), and § 2.34 the Commission Rules of Practice, 16 CFR 2.34, notice is hereby given that the above-captioned consent agreement containing a consent order to cease and desist, having been filed with and accepted, subject to final approval, by the Commission, has been placed on the public record for a period of thirty (30) days. The following Analysis to Aid Public Comment describes the terms of the consent agreement, and the allegations in the complaint. An electronic copy of the full text of the consent agreement package can be obtained from the FTC Home Page (for March 4, 2009), on the World Wide Web, at (*http://www.ftc.gov/os/2009/03/index.htm*). A paper copy can be obtained from the FTC Public Reference Room, Room 130-H, 600 Pennsylvania Avenue, NW, Washington, D.C. 20580, either in person or by calling (202) 326-2222.

Public comments are invited, and may be filed with the Commission in either paper or electronic form. All comments should be filed as prescribed in the **ADDRESSES** section above, and must be received on or before the date specified in the **DATES** section.

Analysis of Agreement Containing Consent Order to Aid Public Comment

The Federal Trade Commission has accepted, subject to final approval, an agreement containing a proposed consent order with the National Association of Music Merchants, Inc. (''NAMM'' or ''Respondent''). NAMM is a trade association composed of more than 9000 members that include manufacturers, distributors, and dealers of musical instruments and related products. The agreement settles charges that NAMM violated Section 5 of the Federal Trade Commission Act, 15 U.S.C. § 45, by arranging and encouraging the exchange among its members of competitively sensitive information that had the purpose, tendency, and capacity to facilitate price coordination and collusion among competitors. The proposed consent order has been placed on the public record for 30 days to receive comments from interested persons. Comments received during this period will become part of the public record. After 30 days, the Commission will review the agreement and the comments received, and will decide whether it should withdraw from the agreement or make the proposed order final.

The purpose of this analysis is to facilitate comment on the proposed order. The analysis does not constitute an official interpretation of the agreement and proposed order, and does not modify their terms in any way. Further, the proposed consent order has been entered into for settlement purposes only, and does not constitute an admission by Respondent that it violated the law or that the facts alleged in the complaint (other than jurisdictional facts) are true.

I. The Complaint

The allegations of the complaint are summarized below:

NAMM is a trade association. Most U.S. manufacturers, distributors, and dealers of musical instruments are members of NAMM. NAMM serves the economic interests of its members by, among other things, promoting consumer demand for musical instruments, lobbying the government, offering seminars, and organizing trade shows. In the United States, NAMM sponsors two major trade shows each year, where manufacturers introduce new products and meet with dealers. In addition, NAMM's trade shows provide competing manufacturers, distributors and retailers of musical instruments an opportunity to meet and discuss issues of concern to the industry.

An ongoing subject of concern to NAMM members in recent years has been the increased retail price competition for musical instruments, and whether that competition benefitted consumers more than it benefitted NAMM members. Between 2005 and 2007, NAMM organized various meetings and programs for its members at which competing retailers of musical instruments were permitted and encouraged to exchange information and discuss strategies for implementing minimum advertised price policies, the restriction of retail price competition, and the need for higher retail prices. Representatives of NAMM determined the scope of information exchange and discussion by selecting moderators and setting the agenda for these programs. At these NAMM-sponsored events, NAMM members discussed the adoption, implementation, and enforcement of minimum advertised price policies; the details and workings of such policies; appropriate and optimal retail price and margins; and other competitively sensitive issues.

II. Legal Analysis

Adam Smith famously warned of the danger of permitting competitors even to assemble in one place.[2] The Federal Trade Commission does not take nearly so jaundiced a view toward trade association activities. The Commission is aware that trade associations can serve numerous valuable and pro-competitive functions, such as expanding the market in which its members sell; educating association members, the public, and government officials; conducting market research; establishing inter-operability standards; and otherwise helping firms to function more efficiently.

At the same time, it is imperative that trade association meetings not serve as a forum for rivals to disseminate or exchange competitively-sensitive information, particularly where such information is highly detailed, disaggregated, and forward-looking. The risk is two-fold. First, a discussion of prices, output, or strategy may mutate into a conspiracy to restrict competition. Second, and even in the absence of an explicit agreement on future conduct, an information exchange may facilitate coordination among rivals that harms competition. In light of the long-recognized risk of antitrust liability, a well-counseled trade association will ensure that its activities are appropriately monitored and supervised.[3]

[2] ''People of the same trade seldom meet together, even for merriment and diversion, but the conversation ends in a conspiracy against the public, or in some contrivance to raise prices.'' Adam Smith, An Inquiry Into the Nature and Causes of the Wealth of Nations 55 (Great Books ed. 1952) (1776).

[3] *See, e.g.*, Steven J. Fellman, Antitrust Compliance: *Trade Association Meetings and Groupings of Competitors: The Associations's Perspective*, 57 Antitrust L. J. 209 (1988) (''Counsel should receive agendas of all committee meetings in advance of the meetings and make sure that he or she monitors committee meetings that may involve antitrust-sensitive issues.''); Kimberly L. King, *An Antitrust Primer For Trade Association Counsel*, 75 Fla. Bar J. 26 (2001):

Here are a few things trade association counsel, executives, and members generally should and should not do: DO encourage the trade association to help expand the markets within which its members compete; . . . . DON'T let the association be used as a forum for discussion of members' price-related terms of sale, geographic areas or customers

According to the Complaint, NAMM's activities crossed the line that distinguishes legitimate trade association activity from unfair methods of competition. A respondent violates Section 1 of the Sherman Act and Section 5 of the FTC Act when it engages in concerted conduct that has the principal tendency or the likely effect of harming competition and consumers. *California Dental Ass'n v. Federal Trade Commission*, 526 U.S. 756 (1999).[4] The conduct of a trade association or its authorized agents is generally treated as concerted action. *E.g.*, *California Dental Ass'n v. FTC*, 526 U.S. 756 (1999); *North Texas Specialty Physicians v. FTC*, 528 F.3d 346, 356 (5th Cir. 2008) (''When an organization is controlled by a group of competitors, it is considered to be a conspiracy of its members.'').

The Complaint alleges that at meetings and programs sponsored by NAMM, competing retailers of musical instruments and other NAMM members discussed strategies for raising retail prices. Firms also exchanged information on competitively-sensitive subjects—prices, margins, minimum advertised price policies and their enforcement. And not only did NAMM sponsor these meetings, but its representatives set the agenda and helped steer the discussions. The antitrust concern is that this joint conduct can facilitate the implementation of collusive strategies going forward.[5] For example, such discussions could lead competing NAMM members to refuse to deal with a manufacturer, distributor, or retailer unless minimum advertised price policies, or increases in minimum advertised prices, were observed and enforced against discounters.[6] Alternatively, NAMM members could lessen price competition in local retail markets. Any or all these strategies may result in higher prices and harm consumers of musical instruments. Any savings from lower manufacturing costs would be reserved to NAMM members, and not shared with consumers in the form of lower retail prices.

The potential for competitive harm from industry-wide discussions must be weighed against the prospect of legitimate efficiency benefits. Here, the Complaint alleges that no significant pro-competitive benefit was derived from the challenged conduct. The Commission does not contend that the exchange of information among competitors is categorically without benefit.[7] Rather, the allegation is that here—taking into account the type of information involved, the level of detail, the absence of procedural safeguards, and overall market conditions—the exchange of information engineered by NAMM lacked a pro-competitive justification.

III. The Proposed Consent Order

NAMM has signed a consent agreement containing a proposed consent Order. The proposed Order enjoins NAMM from encouraging, advocating, coordinating, or facilitating in any manner the exchange of information among musical instrument manufacturers and dealers relating to the retail price of musical instruments or the conditions pursuant to which any manufacturer or dealer will deal with any other manufacturer or dealer. The proposed Order also enjoins NAMM from facilitating any musical instrument manufacturer or dealer in entering into or enforcing any agreement between or among musical instrument manufacturers or dealers relating to the retail price of any musical instrument or the conditions pursuant to which any manufacturer or dealer will deal with any other manufacturer or dealer.

In addition, the proposed Order requires NAMM to institute an antitrust compliance program. The proposed Order requires, *inter alia*, the review by antitrust counsel of all written materials and prepared remarks by any member of NAMM's board of directors, employee, or agent of NAMM relating to price terms and minimum advertised price policies; the provision by antitrust counsel of appropriate guidance on compliance with the antitrust laws; and annual training of NAMM's board of directors, agents, and employees concerning NAMM's obligations under the Order.

The proposed Order would not interfere with the ability of NAMM to engage in legitimate trade association activity, including its sponsorship of trade shows and other events. The proposed Order explicitly excludes from its prohibitions the ordinary commercial activities of NAMM's members on the show floor, and any conduct protected by the *Noerr-Pennington* doctrine. In addition, the proposed Order excludes from its prohibitions the publication or dissemination of aggregated survey data, the sharing of best practices and training materials, and the communication of information relating to creditworthiness, product safety, and warranty issues.

The proposed order will expire in 20 years.

By direction of the Commission.

Donald S. Clark,

Secretary.

[FR Doc. E9–6486 Filed 3–24–09: 8:45 am]

[BILLING CODE 6750–01–S]

---

to be served, or the kinds of goods or services to be offered; DON'T let the association adopt rules governing price-related terms under which members sell goods or services; DON'T let the association be used as a conduit for anticompetitive exchanges of information, such as current pricing to particular customers or planned price increases; DON'T let the association be used to facilitate an agreement among competitors to refuse to deal with any third person . . .

[4] Although the Commission does not directly enforce the Sherman Act, conduct that violates the Sherman Act is generally deemed to be a violation of Section 5 of the FTC Act as well. *E.g., Fashion Originators' Guild, Inc. v. FTC*, 312 U.S. 457, 463-64 (1941).

[5] Concerted action that impairs competition by facilitating collusion may be challenged under Section 1 of the Sherman Act. *E.g.*, *United States v. Container Corp.*, 393 U.S. 333 (1969) (agreement to exchange price information); *Sugar Institute, Inc. v. United States*, 297 U.S. 553 (1936) (agreement to exchange price information); *C-O-Two Fire Equipment Co. v. United States*, 197 F.2d 489 (9th Cir. 1952) (agreement to standardize product); *United States v. Rockford Memorial Hospital Corp.*, 898 F.2d 1278 (7th Cir. 1990) (merger).

Unilateral conduct that impairs competition by facilitating collusion may be challenged under Section 5 of the FTC Act. *E.g.*, *E.I. du Pont de Nemours & Co. v. FTC*, 729 F.2d 128 (2d Cir. 1984); *In the Matter of Valassis Communications, Inc.*, C-4160, 2006 FTC LEXIS 25 (April 19, 2006) (invitation to collude); *In the Matter of Sony Music Entertainment, Inc.*, C-3971, 2000 FTC LEXIS 95 (Aug. 30, 2000) (minimum advertised price policy).

[6] In *Leegin Creative Leather Products, Inc. v. PSKS, Inc.*, 127 S. Ct. 2705, 2717 (2007), the Supreme Court explained that competing retailers, by acting together to compel a manufacturer to implement or enforce a vertical distribution restraint, may harm competition:

A group of retailers might collude to fix prices to consumers and then compel a manufacturer to aid the unlawful arrangement with resale price maintenance. In that instance the manufacturer does not establish the practice to stimulate services or to promote its brand but to give inefficient retailers higher profits. Retailers with better distribution systems and lower cost structures would be prevented from charging lower prices by the agreement.

The Court also observed that antitrust condemnation may be appropriate where resale price maintenance policies are adopted or enforced pursuant to an agreement among manufacturers.

Resale price maintenance may, for example, facilitate a manufacturer cartel. . . . An unlawful cartel will seek to discover if some manufacturers are undercutting the cartel's fixed prices. Resale price maintenance could assist the cartel in identifying price-cutting manufacturers who benefit from the lower prices they offer. Resale price maintenance, furthermore, could discourage a manufacturer from cutting prices to retailers with the concomitant benefit of cheaper prices to consumers. . . . To the extent a vertical agreement setting minimum resale prices is entered upon to facilitate either type of cartel [*i.e.*, a manufacturer cartel or a retailer cartel], it, too, would need to be held unlawful under the rule of reason.

Id. at 2717-18.

[7] *See United States v. United States Gypsum Co.*, 438 U.S. 422 (1978) (explaining that the exchange of information can, in some circumstances, increase economic efficiency and render markets more, rather than less, competitive). *See also* Richard A. Posner, *Information and Antitrust: Reflections on the Gypsum and Engineers Decisions*, 67 Geo. L. J. 1187, 1193-97 (1979).

FEDERAL TRADE COMMISSION

[File No. 072 3119]

CVS Caremark Corporation; Analysis of Proposed Consent Order to Aid Public Comment

AGENCY: Federal Trade Commission.

ACTION: Proposed Consent Agreement.

SUMMARY: The consent agreement in this matter settles alleged violations of federal law prohibiting unfair or deceptive acts or practices or unfair methods of competition. The attached Analysis to Aid Public Comment describes both the allegations in the complaint and the terms of the consent order—embodied in the consent agreement—that would settle these allegations.

DATES: Comments must be received on or before March 27, 2009.

ADDRESSES: Interested parties are invited to submit written comments electronically or in paper form. Comments should refer to''CVS Caremark, File No. 072 3119'' to facilitate the organization of comments. Please note that your comment—including your name and your state—will be placed on the public record of this proceeding, including on the publicly accessible FTC website, at (*http://www.ftc.gov/os/publiccomments.shtm*).

Because comments will be made public, they should not include any sensitive personal information, such as an individual's Social Security Number; date of birth; driver's license number or other state identification number, or foreign country equivalent; passport number; financial account number; or credit or debit card number. Comments also should not include any sensitive health information, such as medical records or other individually identifiable health information. In addition, comments should not include any ''[t]rade secret or any commercial or financial information which is obtained from any person and which is privileged or confidential. . . .,'' as provided in Section 6(f) of the FTC Act, 15 U.S.C. 46(f), and Commission Rule 4.10(a)(2), 16 CFR 4.10(a)(2). Comments containing material for which confidential treatment is requested must be filed in paper form, must be clearly labeled ''Confidential,'' and must comply with FTC Rule 4.9(c).[1]

Because paper mail addressed to the FTC is subject to delay due to heightened security screening, please consider submitting your comments in electronic form. Comments filed in electronic form should be submitted by using the following weblink: (*https://secure.commentworks.com/ftc-CVSCaremark*) (and following the instructions on the web-based form). To ensure that the Commission considers an electronic comment, you must file it on the web-based form at the weblink: (*https://secure.commentworks.com/ftc-CVSCaremark*). If this Notice appears at (*http://www.regulations.gov/search/index.jsp*), you may also file an electronic comment through that website. The Commission will consider all comments that regulations.gov forwards to it. You may also visit the FTC website at *http://www.ftc.gov* to read the Notice and the news release describing it.

A comment filed in paper form should include the ''CVS Caremark, File No. 072 3119'' reference both in the text and on the envelope, and should be mailed or delivered to the following address: Federal Trade Commission, Office of the Secretary, Room H-135, 600 Pennsylvania Avenue, NW, Washington, DC 20580. The FTC is requesting that any comment filed in paper form be sent by courier or overnight service, if possible, because U.S. postal mail in the Washington area and at the Commission is subject to delay due to heightened security precautions.

The Federal Trade Commission Act (''FTC Act'') and other laws the Commission administers permit the collection of public comments to consider and use in this proceeding as appropriate. The Commission will consider all timely and responsive public comments that it receives, whether filed in paper or electronic form. Comments received will be available to the public on the FTC website, to the extent practicable, at (*http://www.ftc.gov/os/publiccomments.shtm*). As a matter of discretion, the Commission makes every effort to remove home contact information for individuals from the public comments it receives before placing those comments on the FTC website. More information, including routine uses permitted by the Privacy Act, may be found in the FTC's privacy policy, at (*http://www.ftc.gov/ftc/privacy.shtm*).

FOR FURTHER INFORMATION CONTACT: Alain Sheer or Loretta Garrison, Bureau of Consumer Protection, 600 Pennsylvania Avenue, NW, Washington, D.C. 20580, (202) 326-2252.

SUPPLEMENTARY INFORMATION: Pursuant to section 6(f) of the Federal Trade Commission Act, 38 Stat. 721, 15 U.S.C. 46(f), and § 2.34 the Commission Rules of Practice, 16 CFR 2.34, notice is hereby given that the above-captioned consent agreement containing a consent order to cease and desist, having been filed with and accepted, subject to final approval, by the Commission, has been placed on the public record for a period of thirty (30) days. The following Analysis to Aid Public Comment describes the terms of the consent agreement, and the allegations in the complaint. An electronic copy of the full text of the consent agreement package can be obtained from the FTC Home Page (for February 18, 2009), on the World Wide Web, at (*http://www.ftc.gov/os/2009/02/index.htm*). A paper copy can be obtained from the FTC Public Reference Room, Room 130-H, 600 Pennsylvania Avenue, NW, Washington, D.C. 20580, either in person or by calling (202) 326-2222.

Public comments are invited, and may be filed with the Commission in either paper or electronic form. All comments should be filed as prescribed in the **ADDRESSES** section above, and must be received on or before the date specified in the **DATES** section.

Analysis of Agreement Containing Consent Order to Aid Public Comment

The Federal Trade Commission has accepted, subject to final approval, a consent agreement from CVS Caremark Corporation (''CVS'').

The proposed consent order has been placed on the public record for thirty (30) days for receipt of comments by interested persons. Comments received during this period will become part of the public record. After thirty (30) days, the Commission will again review the agreement and the comments received, and will decide whether it should withdraw from the agreement and take appropriate action or make final the agreement's proposed order.

The Commission's proposed complaint alleges that CVS is in the business of selling prescription and non-prescription medicines and supplies, as well as other products. It operates, among other things, approximately 6,300 retail pharmacy stores in the United States (collectively, ''CVS pharmacies'') and online and mail order pharmacy businesses. The company allows consumers buying products in CVS pharmacies to pay for

[1] FTC Rule 4.2(d), 16 CFR 4.2(d). The comment must be accompanied by an explicit request for confidential treatment, including the factual and legal basis for the request, and must identify the specific portions of the comment to be withheld from the public record. The request will be granted or denied by the Commission's General Counsel, consistent with applicable law and the public interest. *See* FTC Rule 4.9(c), 16 CFR 4.9(c).

their purchases with credit, debit and electronic benefit transfer cards; insurance cards; personal checks; or cash.

The complaint alleges that in conducting its business, CVS routinely obtains information from or about its customers, including, but not limited to, name; telephone number; address; date of birth; bank account number; payment card account number and expiration date; driver's license number or other government-issued identification; prescription information, such as medication and dosage, prescribing physician name, address, and telephone number, health insurer name, and insurance account number and policy number; and Social Security number. The company also collects and maintains employment information from its employees, which includes, among other things, Social Security numbers.

The complaint further alleges that CVS engaged in a number of practices that, taken together, failed to provide reasonable and appropriate security for sensitive information from consumers and employees. In particular, CVS failed to: (1) implement policies and procedures to dispose securely of such information, including, but not limited to, policies and procedures to render the information unreadable in the course of disposal; (2) adequately train employees to dispose securely of such information; (3) use reasonable measures to assess compliance with its established policies and procedures for the disposal of such information; or (4) employ a reasonable process for discovering and remedying risks to such information.

The complaint alleges that as a result of these failures, CVS pharmacies discarded materials containing sensitive information in clear readable text (such as prescriptions, prescription bottles, pharmacy labels, computer printouts, prescription purchase refunds, credit card receipts, and employee records) in unsecured, publicly-accessible trash dumpsters on numerous occasions. For example, in July 2006 and continuing into 2007, television stations and other media outlets reported finding such information about customers and employees in unsecured dumpsters used by CVS pharmacies in at least 15 cities throughout the United States. When discarded in publicly-accessible dumpsters, such information can be obtained by individuals for purposes of identity theft or the theft of prescription medicines.

The proposed order applies to sensitive information about consumers and employees obtained by CVS. It contains provisions designed to prevent CVS from engaging in the future in practices similar to those alleged in the complaint.

Part I of the proposed order prohibits misrepresentations about the security, confidentiality, and integrity of sensitive information. Part II of the order requires CVS to establish and maintain a comprehensive information security program that is reasonably designed to protect the security, confidentiality, and integrity of such information (whether in paper or electronic format) about consumers, employees, and those seeking to become employees. The order covers health and other sensitive information obtained by all CVS entities, including, but not limited to, retail pharmacies and the pharmacy benefit management business. The security program must contain administrative, technical, and physical safeguards appropriate to CVS's size and complexity, the nature and scope of its activities, and the sensitivity of the information collected from or about consumers and employees. Specifically, the order requires CVS to:

- Designate an employee or employees to coordinate and be accountable for the information security program.
- Identify material internal and external risks to the security, confidentiality, and integrity of customer information that could result in the unauthorized disclosure, misuse, loss, alteration, destruction, or other compromise of such information, and assess the sufficiency of any safeguards in place to control these risks.
- Design and implement reasonable safeguards to control the risks identified through risk assessment, and regularly test or monitor the effectiveness of the safeguards' key controls, systems, and procedures.
- Develop and use reasonable steps to select and retain service providers capable of appropriately safeguarding personal information they receive from CVS, and require service providers by contract to implement and maintain appropriate safeguards.
- Evaluate and adjust its information security programs in light of the results of testing and monitoring, any material changes to operations or business arrangements, or any other circumstances that it knows or has reason to know may have material impact on its information security program.

Part III of the proposed order requires CVS to obtain within one year, and on a biennial basis thereafter for a period of twenty (20) years, an assessment and report from a qualified, objective, independent third-party professional, certifying, among other things, that: (1) it has in place a security program that provides protections that meet or exceed the protections required by Part II of the proposed order; and (2) its security program is operating with sufficient effectiveness to provide reasonable assurance that the security, confidentiality, and integrity of sensitive consumer and employee information has been protected.

Parts IV through VIII of the proposed order are reporting and compliance provisions. Part IV requires CVS to retain documents relating to its compliance with the order. For most records, the order requires that the documents be retained for a five-year period. For the third-party assessments and supporting documents, CVS must retain the documents for a period of three years after the date that each assessment is prepared. Part V requires dissemination of the order now and in the future to persons with responsibilities relating to the subject matter of the order. Part VI ensures notification to the FTC of changes in corporate status. Part VII mandates that CVS submit a compliance report to the FTC within 90 days, and periodically thereafter as requested. Part VIII is a provision ''sunsetting'' the order after twenty (20) years, with certain exceptions.

The Commission conducted its investigation jointly with the Office for Civil Rights in the Department of Health and Human Services (''OCR-HHS''). Working together, the Commission and OCR-HHS each entered into separate but coordinated agreements with CVS to resolve all the issues of both agencies.

This is the Commission's twenty-fourth case to challenge the failure by a company to implement reasonable information security practices, and the first case: (1) involving a health provider, (2) proceeding jointly with OCR-HHS, and (3) challenging the security of employee data.

The purpose of this analysis is to facilitate public comment on the proposed order. It is not intended to constitute an official interpretation of the proposed order or to modify its terms in any way.

By direction of the Commission.

Donald S. Clark,

Secretary.

[FR Doc. E9–6484 Filed 3–24–09: 8:45 am]

[BILLING CODE 6750–01–S]

DEPARTMENT OF HEALTH AND HUMAN SERVICES

Centers for Disease Control and Prevention

[30Day–09–08BK]

Agency Forms Undergoing Paperwork Reduction Act Review

The Centers for Disease Control and Prevention (CDC) publishes a list of information collection requests under review by the Office of Management and Budget (OMB) in compliance with the Paperwork Reduction Act (44 U.S.C. Chapter 35). To request a copy of these requests, call the CDC Reports Clearance Officer at (404) 639–5960 or send an e-mail to *omb@cdc.gov*. Send written comments to CDC Desk Officer, Office of Management and Budget, Washington, DC or by fax to (202) 395–6974. Written comments should be received within 30 days of this notice.

Proposed Project

Exploratory Research with People Living with Lung Cancer—New—Division of Cancer Prevention and Control (DCPC), National Center for Chronic Disease Prevention and Health Promotion (NCCDPHP), Centers for Disease Control and Prevention (CDC).

Background and Brief Description

Lung cancer is the most common cancer and is the leading cause of cancer related mortality in the world. Each year, over 215,000 Americans are diagnosed with lung cancer and a similar number die from the disease. The five-year survival rate for lung cancer is 15%. The needs of individuals affected by lung cancer have received less attention in health care research than the needs of individuals with other types of cancer. This results in a gap in knowledge about a significant number of people living with the diagnosis of lung cancer.

CDC proposes to conduct formative research to improve understanding of the challenges and needs of individuals living with lung cancer. Because smoking is one of the primary risk factors for lung cancer, the research will include respondents with different types of smoking history. This research will explore the influence of smoking status on individual experience with cancer diagnosis, stigma and discrimination, as well as counseling and support services. For example, individuals who have never smoked may face challenges in obtaining an initial diagnosis of lung cancer, while current or former smokers may feel subject to judgments or blame from others, including medical providers as well as family and friends.

Information will be collected during in-depth interviews (IDIs) with 27 respondents between the ages of 30 and 80 who have been diagnosed with lung cancer. Three different types of respondents will be recruited from partnering clinical practices in two U.S. cities (Greensboro, North Carolina and Temple, Texas): individuals who are *Smokers* (9), individuals who are *Former Smokers* (9), and individuals who *Never Smoked* (9). Each telephone interview will last approximately one hour.

The results of this exploratory research project will inform future research activities and the development of health-related information and services that will benefit individuals living with lung cancer. Project goals support the goals for cancer and communication described in Healthy People 2010.

There are no costs to respondents other than their time. The total estimated burden hours are 50.

ESTIMATED ANNUALIZED BURDEN HOURS

Type of respondents	Form name	Number of respondents	Number of responses per respondent	Average burden per response (in hours)
People Living with Lung Cancer	Contact Information Form and Consent for Contact.	88	1	8/60
	Screening Form	66	1	10/60
	In-depth Interview Guide	27	1	1

Dated: March 17, 2009.

Maryam I. Daneshvar,

Acting Reports Clearance Officer, Centers for Disease Control and Prevention.

[FR Doc. E9–6716 Filed 3–24–09; 8:45 am]

BILLING CODE 4163–18–P

DEPARTMENT OF HEALTH AND HUMAN SERVICES

Centers for Disease Control and Prevention

Disease, Disability, and Injury Prevention and ControlSpecial Emphasis Panel (SEP): Potential Extramural Project (PEP) 2009–R–03

In accordance with Section 10(a)(2) of the Federal Advisory Committee Act (Pub. L. 92–463), the Centers for Disease Control and Prevention (CDC) announces the aforementioned meeting.

Time and Date: 1 p.m.–3 p.m., May 19, 2009 (Closed).

Place: Teleconference.

Status: The meeting will be closed to the public in accordance with provisions set forth in Section 552b(c) (4) and (6), Title 5 U.S.C., and the Determination of the Director, Management Analysis and Services Office, CDC, pursuant to Public Law 92–463.

Matters to be Discussed: The meeting will include the review, discussion, and evaluation of ''Establishing a Surveillance System for Chronic Kidney Disease, PEP 2009–R–03.''

Contact Person for More Information: Linda Shelton, Public Health Analyst, Coordinating Center for Health and Information Service, Office of the Director, CDC, 1600 Clifton Road, NE., Mailstop E21, Atlanta, GA 30333, Telephone (404) 498–1194.

The Director, Management Analysis and Services Office, has been delegated the authority to sign **Federal Register** notices pertaining to announcements of meetings and other committee management activities, for both CDC and the Agency for Toxic Substances and Disease Registry.

Dated: March 16, 2009.

Elaine L. Baker,

Director, Management Analysis and Services Office, Centers for Disease Control and Prevention.

[FR Doc. E9–6714 Filed 3–24–09; 8:45 am]

BILLING CODE 4163–18–P

DEPARTMENT OF HEALTH AND HUMAN SERVICES

Centers for Disease Control and Prevention

Disease, Disability, and Injury Prevention and Control Special Emphasis Panel (SEP): Pilot Lifestyle Interventions for Pregestational Diabetes or Gestational Diabetes, PEP 2009–R–01/02

In accordance with Section 10(a)(2) of the Federal Advisory Committee Act (Pub. L. 92–463), the Centers for Disease Control and Prevention (CDC) announces the aforementioned meeting.

Time and Date: 1 p.m.–4 p.m., May 20, 2009 (Closed).
1 p.m.–4 p.m., May 21, 2009 (Closed).

Place: Teleconference.

Status: The meeting will be closed to the public in accordance with provisions set forth in Section 552b(c) (4) and (6), Title 5 U.S.C., and the Determination of the Director, Management Analysis and Services Office, CDC, pursuant to Public Law 92–463.

Matters to be Discussed: The meeting will include the review, discussion, and evaluation of ''Pilot Lifestyle Interventions for Pregestational Diabetes or Gestational Diabetes, PEP 2009–R–01/02.''

Contact Person for More Information: Linda Shelton, Program Specialist, Coordinating Center for Health and Information Service, Office of the Director, CDC, 1600 Clifton Road, NE., Mailstop E21, Atlanta, GA 30333, Telephone (404) 498–1194.

The Director, Management Analysis and Services Office, has been delegated the authority to sign **Federal Register** notices pertaining to announcements of meetings and other committee management activities, for both CDC and the Agency for Toxic Substances and Disease Registry.

Dated: March 16, 2009.

Elaine L. Baker,

Director, Management Analysis and Services Office, Centers for Disease Control and Prevention.

[FR Doc. E9–6715 Filed 3–24–09; 8:45 am]

BILLING CODE 4163–18–P

DEPARTMENT OF HEALTH AND HUMAN SERVICES

Centers for Disease Control and Prevention

Ethics Subcommittee, Advisory Committee to the Director (ACD), Centers for Disease Control and Prevention (CDC)

In accordance with section 10(a)(2) of the Federal Advisory Committee Act (Pub. L. 92–463), CDC announces the following meeting for the aforementioned subcommittee.

Time and Date: 1 p.m.–2:30 p.m., April 7, 2009.

Place: This meeting will be held by conference call. The call in number is (866) 919–3560 and enter passcode: 4168828.

Status: Open to the public. The public is welcome to participate during the public comment period which is tentatively scheduled from 2 p.m.–2:15 p.m.

Purpose: The Ethics Subcommittee will provide counsel to the ACD, CDC, regarding a broad range of public health ethics questions and issues arising from programs, scientists and practitioners.

Matters To Be Discussed: The agenda items will include discussion of ethical considerations relating to the use of travel restrictions for the control of communicable diseases, ethics guidance for public health emergency preparedness and response.

This notice is published less than 15 days before the meeting due to administrative delays.

Contact Person for More Information: Drue Barrett, PhD, Designated Federal Officer, Ethics Subcommittee, CDC, 1600 Clifton Road, NE., M/S D–50, Atlanta, Georgia 30333. Telephone 404–639–4690. E-mail: *dbarrett@cdc.gov.*

The Director, Management Analysis and Services Office, has been delegated the authority to sign **Federal Register** notices pertaining to announcements of meetings and other committee management activities, for both the Centers for Disease Control and Prevention and the Agency for Toxic Substances and Disease Registry.

Dated: March 19, 2009.

Andre Tyler,

Acting Director, Management Analysis and Services Office, Centers for Disease Control and Prevention.

[FR Doc. E9–6566 Filed 3–24–09; 8:45 am]

BILLING CODE 4163–18–P

DEPARTMENT OF HEALTH AND HUMAN SERVICES

Administration for Children and Families, Office of Head Start (OHS)

Public Comment on Tribal Consultation Sessions

AGENCY: Office of Head Start (OHS), Administration for Children and Families, Department of Health and Human Services.

ACTION: Notice of Public Comment on Tribal Consultation Sessions to be held on April 21, May 5, May 13, and May 26, 2009.

SUMMARY: Pursuant to the Improving Head Start for School Readiness Act of 2007, Public Law 110–134, notice is hereby given of one-day Tribal Consultation Sessions to be held between the Department of Health and Human Services, Administration for Children and Families, Office of Head Start leadership and the leadership of Tribal governments operating Head Start (including Early Head Start) programs. The purpose of the Consultation Sessions is to discuss ways to better meet the needs of Indian, including Alaska Native, children and their families, taking into consideration funding allocations, distribution formulas, and other issues affecting the delivery of Head Start services in their geographic locations [42 U.S.C. 9835, Section 640(l)(4)].

Date & Location: The Consultation Sessions will be held as follows:
April 21, 2009–Albuquerque, New Mexico
May 5, 2009–Tucson, Arizona
May 13, 2009–Marksville, Louisiana
May 26, 2009–Anchorage, Alaska

FOR FURTHER INFORMATION CONTACT: Nina McFadden, Regional Program Manager, American Indian/Alaska Native Program Branch, Office of Head Start, e-mail *nina.mcfadden@acf.hhs.gov* or (202) 205–8569. Additional information and online registration is available at *http://www.hsnrc.org.* Information on Tribal Consultation Sessions in other Regions will be announced once dates and locations are confirmed.

SUPPLEMENTARY INFORMATION: The Department of Health and Human Services (HHS) would like to invite leaders of Tribal governments operating Head Start (including Early Head Start) programs to participate in a formal Consultation Session with OHS leadership. The Consultation Sessions will take place on Tuesday, April 21, 2009, in Albuquerque, New Mexico; Tuesday, May 5, 2009, in Tucson, Arizona; Wednesday, May 13, 2009, in Marksville, Louisiana; and Tuesday, May 26, 2009, in Anchorage, Alaska. These sessions have been scheduled in conjunction with the HHS Tribal consultations for the convenience of the Tribal leaders. It should be noted that the May 13 consultation in Marksville, Louisiana, is a joint session for Tribes in Regions I, II, IV, and VI. Head Start will be on the HHS consultation agenda for Wednesday afternoon, May 13, 2009. OHS Consultation Sessions in other Regions have yet to be scheduled.

Hotel and logistical information for the Consultation Sessions is currently being confirmed. This information will be sent to Tribal leaders via e-mail and posted on the Head Start Resource Center Web site, *http://www.hsnrc.org,* as it becomes available.

The purpose of the Consultation Sessions is to solicit input on ways to better meet the needs of Indian, including Alaska Native, children and their families, taking into consideration

funding allocations, distribution formulas, and other issues affecting the delivery of Head Start services in their geographic locations.

The agendas for the Consultation Sessions will be developed in conjunction with the HHS Regional Tribal Planning Committees. Tribal leaders and designated representatives interested in submitting topics for a Consultation Session agenda should contact Nina McFadden at *nina.mcfadden@acf.hhs.gov.* The proposal should include a brief description of the topic area along with the name and contact information of the suggested presenter.

The Consultation Sessions will be conducted with elected or appointed leaders of Tribal governments and their designated representatives [42 U.S.C. 9835, Section 640(l)(4)(A)]. Representatives from Tribal organizations and Native non-profit organizations are welcome to attend as observers. Those serving as representatives of a Tribe must have a written letter from the Tribal government authorizing them to serve as the Tribal representative. This should be submitted not less than three days in advance of the Consultation Session to Nina McFadden at 202–205–9721 (fax).

A detailed report of each Consultation Session will be prepared and made available within 90 days of the consultation to all Tribal governments receiving funds for Head Start (including Early Head Start) programs. Tribes wishing to submit written testimony for the consultation report should send it to Nina McFadden at *nina.mcfadden@acf.hhs.gov* either prior to the Consultation Session or within 30 days after the meeting. *Please note that only written testimony submitted to OHS will be included in the report, as an appendix.* Testimony and comments made orally will be summarized in the report without attribution, along with topics of concern and recommendations.

Dated: March 19, 2009.

Frank Fuentes,

Acting Director, Office of Head Start.

[FR Doc. E9–6551 Filed 3–24–09; 8:45 am]

BILLING CODE 4184–01–P

DEPARTMENT OF HEALTH AND HUMAN SERVICES

National Institutes of Health

National Center for Research Resources; Notice of Meeting

Pursuant to section 10(d) of the Federal Advisory Committee Act, as amended (5 U.S.C. Appendix 2), notice is hereby given of a meeting of the National Advisory Research Resources Council.

The meeting will be open to the public as indicated below, with attendance limited to space available. Individuals who plan to attend and need special assistance, such as sign language interpretation or other reasonable accommodations, should notify the *Contact Person* listed below in advance of the meeting.

The meeting will be closed to the public in accordance with the provisions set forth in sections 552b(c)(4) and 552b(c)(6), Title 5 U.S.C., as amended. The grant applications and/or contract proposals and the discussions could disclose confidential trade secrets or commercial property such as patentable material, and personal information concerning individuals associated with the grant applications and/or contract proposals, the disclosure of which would constitute a clearly unwarranted invasion of personal privacy.

Name of Committee: National Advisory Research Resources Council.

Date: May 28, 2009.

Open: 8 a.m. to 12 p.m.

Agenda: Report of the Director, NCRR and other Council business.

Place: National Institutes of Health, Building 31, 31 Center Drive, Conference Room 6, Bethesda, MD 20892.

Closed: 1 p.m. to 4 p.m.

Agenda: To review and evaluate grant applications and/or proposals.

Place: National Institutes of Health, Building 31, 31 Center Drive, Conference Room 6, Bethesda, MD 20892.

Contact Person: Louise E. Ramm, PhD, Deputy Director, National Center for Research Resources, National Institutes of Health, Building 31, Room 3B11, Bethesda, MD 20892. 301–496–6023. *louiser@ncrr.nih.gov.*

Any interested person may file written comments with the committee by forwarding the statement to the **CONTACT PERSON** listed on this notice. The statement should include the name, address, telephone number and when applicable, the business or professional affiliation of the interested person.

In the interest of security, NIH has instituted stringent procedures for entrance onto the NIH campus. All visitor vehicles, including taxicabs, hotel, and airport shuttles will be inspected before being allowed on campus. Visitors will be asked to show one form of identification (for example, a government-issued photo ID, driver's license, or passport) and to state the purpose of their visit.

Information is also available on the Institute's/Center's home page: *www.ncrr.nih.gov/newspub/minutes.htm*, where an agenda and any additional information for the meeting will be posted when available.

(Catalogue of Federal Domestic Assistance Program Nos. 93.306, Comparative Medicine; 93.333, Clinical Research; 93.371, Biomedical Technology; 93.389, Research Infrastructure, 93.306, 93.333, National Institutes of Health, HHS)

Dated: March 19, 2009.

Jennifer Spaeth,

Director, Office of Federal Advisory Committee Policy.

[FR Doc. E9–6599 Filed 3–24–09; 8:45 am]

BILLING CODE 4140–01–P

DEPARTMENT OF HEALTH AND HUMAN SERVICES

National Institutes of Health

National Institute of Allergy and Infectious Diseases; Amended Notice of Meeting

Notice is hereby given of a change in the meeting of the National Advisory Allergy and Infectious Diseases Council, May 18, 2009, 8:30 a.m. to May 18, 2009, 5 p.m., National Institutes of Health, Natcher Building, 45 Center Drive, Conference Rooms E1/E2, Bethesda, MD, 20892 which was published in the **Federal Register** on January 14, 2009, 74 FR 2083.

The full council will meet in closed session from 12:15 p.m. to 1:15 p.m. to discuss changes in the ECB. This discussion will involve confidential material. Subcommittee meetings that were to start at 1 p.m. will begin at 1:30 p.m. The meeting is partially closed to the public.

Dated: March 19, 2009.

Jennifer Spaeth,

Director, Office of Federal Advisory Committee Policy.

[FR Doc. E9–6596 Filed 3–24–09; 8:45 am]

BILLING CODE 4140–01–P

DEPARTMENT OF HEALTH AND HUMAN SERVICES

National Institutes of Health

Public Comment Session for Cancer Patients' CAM Information Needs Comment Period

AGENCY: National Cancer Institute (NCI), National Institutes of Health (NIH), Department of Health and Human Services (HHS).

ACTION: Request for public comment.

SUMMARY: In compliance with the provisions of Section 3506(c)(2)(A) of the Paperwork Reduction Act of 1995, for opportunity for public comments on proposed data collection projects, the National Institutes of Health (NIH), National Cancer Institute (NCI) will publish periodic summaries of proposed

projects to be submitted to the Office of Management and Budget (OMB) for review and approval.

DATES: The Public Comment Session for Patients' CAM Information Needs public comment period will run from April 1, 2009 through May 30, 2009.

ADDRESSES: Comments may be submitted electronically at *http://www.cancer.gov/cam*.

Background: Title: Public Comment Session for Patients' CAM Information Needs. *Type of Information Collection Request:* New. *Need and Use of Information Collection:* The National Cancer Institute's Office of Cancer Complementary and Alternative Medicine (OCCAM) strives to increase the amount of high-quality information on cancer and complementary and alternative medicine (CAM) available for cancer patients and their families. We would like to better understand CAM information needs from the viewpoints of cancer patients and health professionals who regularly interact with and serve cancer patients.

Request for Comments: Written comments and/or suggestions from the public and affected agencies are invited on one or more of the following points: (a) Common issues, topics, or themes that emerge when discussing CAM with patients; (b) specific CAM therapies asked about most frequently; (c) ways media stories about CAM affect cancer patients; (d) resources patients use to get information about CAM; (e) common myths or misinformation patients have about CAM; and (f) cancer CAM information resources or services that NCI should provide to cancer patients.

Dated: March 16, 2009.

Shea Buckman,

NCI OCCAM Communications and Outreach Manager, National Institutes of Health.

[FR Doc. E9–6591 Filed 3–24–09; 8:45 am]

BILLING CODE 4140–01–P

DEPARTMENT OF HOMELAND SECURITY

Federal Emergency Management Agency

[Internal Agency Docket No. FEMA–1824–DR; Docket ID FEMA–2008–0018]

Oregon; Amendment No. 2 to Notice of a Major Disaster Declaration

AGENCY: Federal Emergency Management Agency, DHS.

ACTION: Notice.

SUMMARY: This notice amends the notice of a major disaster declaration for the State of Oregon (FEMA–1824–DR), dated March 2, 2009, and related determinations.

DATES: *Effective Date:* March 18, 2009.

FOR FURTHER INFORMATION CONTACT: Peggy Miller, Disaster Assistance Directorate, Federal Emergency Management Agency, 500 C Street, SW., Washington, DC 20472, (202) 646–3886.

SUPPLEMENTARY INFORMATION: The notice of a major disaster declaration for the State of Oregon is hereby amended to include the following area among those areas determined to have been adversely affected by the event declared a major disaster by the President in his declaration of March 2, 2009.

Tillamook County for Public Assistance.

The following Catalog of Federal Domestic Assistance Numbers (CFDA) are to be used for reporting and drawing funds: 97.030, Community Disaster Loans; 97.031, Cora Brown Fund; 97.032, Crisis Counseling; 97.033, Disaster Legal Services; 97.034, Disaster Unemployment Assistance (DUA); 97.046, Fire Management Assistance Grant; 97.048, Disaster Housing Assistance to Individuals and Households in Presidentially Declared Disaster Areas; 97.049, Presidentially Declared Disaster Assistance—Disaster Housing Operations for Individuals and Households; 97.050, Presidentially Declared Disaster Assistance to Individuals and Households—Other Needs; 97.036, Disaster Grants—Public Assistance (Presidentially Declared Disasters);97.039, Hazard Mitigation Grant.

Nancy Ward,

Acting Administrator, Federal Emergency Management Agency.

[FR Doc. E9–6651 Filed 3–24–09; 8:45 am]

BILLING CODE 9111–23–P

DEPARTMENT OF HOMELAND SECURITY

Federal Emergency Management Agency

[Internal Agency Docket No. FEMA–1824–DR; Docket ID FEMA–2008–0018]

Oregon; Amendment No. 1 to Notice of a Major Disaster Declaration

AGENCY: Federal Emergency Management Agency, DHS.

ACTION: Notice.

SUMMARY: This notice amends the notice of a major disaster declaration for the State of Oregon (FEMA–1824–DR), datedMarch 2, 2009, and related determinations.

DATES: *Effective Date:* March 13, 2009.

FOR FURTHER INFORMATION CONTACT: Peggy Miller, Disaster Assistance Directorate, Federal Emergency Management Agency, 500 C Street, SW., Washington, DC 20472, (202) 646–3886.

SUPPLEMENTARY INFORMATION: The notice of a major disaster declaration for the State of Oregon is hereby amended to include the following area among those areas determined to have been adversely affected by the event declared a major disaster by the President in his declaration of March 2, 2009.

Washington County for Public Assistance [Categories A–G] (already designated for emergency protective measures [Category B], including snow removal assistance, under the Public Assistance program).

The following Catalog of Federal Domestic Assistance Numbers (CFDA) are to be used for reporting and drawing funds: 97.030, Community Disaster Loans; 97.031, Cora Brown Fund; 97.032, Crisis Counseling; 97.033, Disaster Legal Services; 97.034, Disaster Unemployment Assistance (DUA); 97.046, Fire Management Assistance Grant; 97.048, Disaster Housing Assistance to Individuals and Households In Presidentially Declared Disaster Areas; 97.049, Presidentially Declared Disaster Assistance—Disaster Housing Operations for Individuals and Households; 97.050, Presidentially Declared Disaster Assistance to Individuals and Households—Other Needs; 97.036, Disaster Grants—Public Assistance (Presidentially Declared Disasters); 97.039, Hazard Mitigation Grant.

Nancy Ward,

Acting Administrator, Federal Emergency Management Agency.

[FR Doc. E9–6713 Filed 3–24–09; 8:45 am]

BILLING CODE 9111–23–P

DEPARTMENT OF HOMELAND SECURITY

Federal Radiological Preparedness Coordinating Committee; Meeting

AGENCY: Federal Emergency Management Agency, DHS.

ACTION: Notice of public meeting.

SUMMARY: The Federal Radiological Preparedness Coordinating Committee (FRPCC) is holding a public meeting on April 14, 2009 in Washington, DC.

DATES: The meeting will take place on April 14, 2009, from 9 a.m. to 11 a.m. Send written statements and requests to make oral statements to the contact person listed below by close of business April 6, 2009.

ADDRESSES: The meeting will be held in the ''Discovery II'' meeting room at the Holiday Inn Capitol, 550 C Street SW., Washington, DC 20024.

FOR FURTHER INFORMATION CONTACT: Timothy Greten, FRPCC Executive Secretary, DHS/FEMA, South Bell Street—CC847, Mail Stop 3025, Arlington, VA 20598–3025; telephone (202) 646–3907; fax (703) 305–0837; or e-mail *timothy.greten@dhs.gov*.

SUPPLEMENTARY INFORMATION: The role and functions of the Federal Radiological Preparedness Coordinating Committee (FRPCC) are described in 44 CFR parts 351.10(a) and 351.11(a). The FRPCC is holding a public meeting on April 14, 2009, from 9 a.m. to 11 a.m., at the Holiday Inn Capitol, in Washington, DC. Please note that the meeting may close early. This meeting is open to the public, subject to the availability of space. Public meeting participants must pre-register to be admitted to the meeting. To pre-register, please provide your name and telephone number by close of business on April 6, 2009, to the contact person listed above.

The tentative agenda for the FRPCC meeting includes: (1) Introductions, (2) reports from FRPCC Subcommittees, (3) old business and new business, and (4) business from the floor. The FRPCC Chair shall conduct the meeting in a way that will facilitate the orderly conduct of business. Reasonable provisions will be made, if time permits, for oral statements from the public of not more than five minutes in length. Any member of the public who wishes to make an oral statement at the meeting should send a written request for time by close of business on April 6, 2009, to the contact person listed above. Any member of the public who wishes to file a written statement with the FRPCC should provide the statement by close of business on April 6, 2009, to the contact person listed above.

Information on Services for Individuals With Disabilities

For information on facilities or services for individuals with disabilities or to request special assistance at the meeting, please write or call the contact person listed above as soon as possible.

Authority: 44 CFR 351.10(a) and 351.11(a).

Dated: March 16, 2009.

James R. Kish,

Director, Technological Hazards Division, National Preparedness Directorate, Department of Homeland Security, Federal Emergency Management Agency, Chair, Federal Radiological Preparedness Coordinating Committee.

[FR Doc. E9–6652 Filed 3–24–09; 8:45 am]

BILLING CODE 9110–21–P

DEPARTMENT OF HOMELAND SECURITY

Federal Emergency Management Agency

[Docket ID: FEMA–2007–0008]

National Advisory Council Meeting

AGENCY: Federal Emergency Management Agency, DHS.

ACTION: Notice of the National Advisory Committee Meeting.

SUMMARY: This notice announces the date, time, location, and agenda for the next meeting of the National Advisory Council (NAC). At the meeting, the subcommittees will report on their work since the December 10–11, 2008 meeting. This meeting will be open to the public.

DATES: *Meeting Dates:* Wednesday, April 15, 2009, from approximately 10 a.m. to 5:15 p.m. and Thursday, April 16, 2009, 8:30 a.m. to 3:30 p.m. A public comment period will take place on the afternoon of April 16, 2009, between approximately 2:30 p.m. and 3 p.m.

Comment Date: Persons wishing to make an oral presentation, or who are unable to attend or speak at the meeting, may submit written comments. Written comments or requests to make oral presentations must be received by April 6, 2009.

ADDRESSES: The meeting will be held at Washington Court Hotel, 525 New Jersey Ave., NW., Washington, DC 20001. Written comments and requests to make oral presentations at the meeting should be provided to the address listed in the **FOR FURTHER INFORMATION CONTACT** section and must be received by April 6, 2009. All submissions received must include the Docket ID FEMA–2007–0008 and may be submitted by any one of the following methods:

Federal Rulemaking Portal: http://www.regulations.gov. Follow instructions for submitting comments on the Web site.

E-mail: FEMA-RULES@dhs.gov. Include Docket ID FEMA–2007–0008 in the subject line of the message.

Facsimile: (703) 483–2999.

Mail: Office of Chief Counsel, Federal Emergency Management Agency, Room 835, 500 C Street, SW., Washington, DC 20472.

Hand Delivery/Courier: Office of the Chief Counsel, Federal Emergency Management Agency, Room 835, 500 C Street, SW., Washington, DC 20472.

Instructions: All submissions received must include the Docket ID FEMA–2007–0008. Comments received also will be posted without alteration at *http://www.regulations.gov,* including any personal information provided.

Docket: For access to the docket to read documents or comments received by the National Advisory Council, go to *http://www.regulations.gov.*

FOR FURTHER INFORMATION CONTACT: Alyson Price, Designated Federal Officer, Federal Emergency Management Agency, 500 C Street, SW., (Room 718), Washington, DC 20472, telephone 202–646–3746, fax 202–646–4176, and e-mail *FEMA-NAC@dhs.gov.* The NAC Web site is located at: *http://www.fema.gov/about/nac/.*

SUPPLEMENTARY INFORMATION:

Notice of this meeting is required under the Federal Advisory Committee Act (FACA), Public Law 92–463, as amended (5 U.S.C. App. 1 *et seq.*). The National Advisory Council (NAC) will meet for the purpose of reviewing the progress and/or potential recommendations of the following NAC subcommittees: Stafford Act, National Response Framework, National Incident Management System, Post-Disaster Housing, Special Needs, and Public/Private Partnerships. The council will receive an update on the Regional Advisory Councils, transition issues, and other matters.

Public Attendance: The meeting is open to the public. Please note that the meeting may adjourn early if all business is finished. Persons with disabilities who require special assistance should advise the Designated Federal Officer of their anticipated special needs as early as possible. Members of the public who wish to make comments on Thursday, April 16, 2009 between 2:30 p.m. and 3:00 p.m. are requested to register in advance, and must be present and seated by 1 pm. Please note that this time may change slightly if the meeting adjourns early. In order to allow as many people as possible to speak, speakers are requested to limit their remarks to 3 minutes. For those wishing to submit written comments, please follow the procedure noted above.

Dated: March 13, 2009.

Nancy Ward,

Acting Administrator,Federal Emergency Management Agency.

[FR Doc. E9–6712 Filed 3–24–09; 8:45 am]

BILLING CODE 9111–48–P

DEPARTMENT OF HOMELAND SECURITY

U.S. Customs and Border Protection

Agency Information Collection Activities: User Fees

AGENCY: U.S. Customs and Border Protection (CBP), Department of Homeland Security.

ACTION: 60–Day notice and request for comments; Extension of an existing collection of information: 1651–0052.

SUMMARY: As part of its continuing effort to reduce paperwork and respondent burden, CBP invites the general public and other Federal agencies to comment on an information collection requirement concerning User Fees. This request for comment is being made pursuant to the Paperwork Reduction Act of 1995 (Pub. L. 104–13; 44 U.S.C. 3505(c)(2)).

DATES: Written comments should be received on or before May 26, 2009, to be assured of consideration.

ADDRESSES: Direct all written comments to the U.S. Customs and Border Protection, Attn: Tracey Denning, Room 3.2.C, 1300 Pennsylvania Avenue, NW., Washington, DC 20229.

FOR FURTHER INFORMATION CONTACT: Requests for additional information should be directed to the U.S. Customs and Border Protection, Attn.: Tracey Denning, Room 3.2.C, 1300 Pennsylvania Avenue, NW., Washington, DC 20229, Tel. (202) 344–1429.

SUPPLEMENTARY INFORMATION: CBP invites the general public and other Federal agencies to comment on proposed and/or continuing information collections pursuant to the Paperwork Reduction Act of 1995 (Pub. L. 104–13; 44 U.S.C. 3505(c)(2)). The comments should address: (a) Whether the collection of information is necessary for the proper performance of the functions of the agency, including whether the information shall have practical utility; (b) the accuracy of the agency's estimates of the burden of the collection of information; (c) ways to enhance the quality, utility, and clarity of the information to be collected; (d) ways to minimize the burden including the use of automated collection techniques or the use of other forms of information technology; and (e) the annual costs burden to respondents or recordkeepers from the collection of information (a total capital/startup costs and operations and maintenance costs). The comments that are submitted will be summarized and included in the CBP request for Office of Management and Budget (OMB) approval. All comments will become a matter of public record. In this document CBP is soliciting comments concerning the following information collection:

Title: User Fees.

OMB Number: 1651–0052.

Form Number: CBP Forms 339A, 339C and 339V.

Abstract: The information collected on the User Fee Forms 339A, 339C and 339V is necessary in order for CBP to collect the proper amount of fees from private and commercial vessels, private aircraft, operators of commercial trucks, and passenger and freight railroad cars entering the United States. This collection of information also applies to reports filed by user fee express consignment operators.

Current Actions: This submission is being made to extend the expiration date with a change to the burden hours to allow for revisions to Form 339C for commercial vehicles.

Type of Review: Extension (with change).

Affected Public: Businesses or other for-profit institutions.

Estimated Number of Respondents: 75,030.

Estimated Number of Annual Responses: 75,110.

Estimated Time per Response: 18.5 minutes.

Estimated Total Annual Burden Hours: 23,562.

Dated: March 18, 2009.

Tracey Denning,

Agency Clearance Officer, Customs and Border Protection.

[FR Doc. E9–6552 Filed 3–24–09; 8:45 am]

BILLING CODE 9111–14–P

DEPARTMENT OF HOUSING AND URBAN DEVELOPMENT

[Docket No. FR–5303–N–01]

Notice of Availability of Fiscal Year 2008 Fleet Alternative Fuel Vehicle Acquisition Report

AGENCY: Office of the Assistant Secretary for Administration, HUD.

ACTION: Notice of availability of report.

SUMMARY: Through this notice, HUD is announcing the availability on its Web site of HUD's Fleet Alternative Fuel Vehicle Acquisition Report for Fiscal Year 2008, which was prepared in accordance with the Energy Policy Act of 1992.

FOR FURTHER INFORMATION CONTACT: Bradley S. Jewitt, Director, Facilities Management Division, Office of Administrative and Management Services, Office of Administration, Department of Housing and Urban Development, 451 7th Street, SW., Washington, DC 20410–3000; telephone number 202–402–7384 (this is not a toll-free number). Hearing-or speech-impaired individuals may access the voice telephone number listed above by calling the toll-free Federal Information Relay Service during working hours at 800–877–8339.

SUPPLEMENTARY INFORMATION: The Energy Policy Act (42 U.S.C. 13201 *et seq.*) (the Act) establishes a comprehensive plan to achieve economic, energy and environmental benefits by promoting the use of alternative fuels. A major goal of the Act is to have the Federal government exercise leadership in the use of alternative fuel vehicles. To that end, the Act established alternative fuel vehicle purchasing requirements for the Federal fleets of government agencies, and requires Federal agencies to report on their compliance with the requirements of the Act. A copy of HUD's Fiscal Year 2008 Fleet Alternative Fuel Vehicle Report can be obtained via the World Wide Web at: *http://www.hud.gov/offices/adm/reports/admreports.cfm.*

Dated: March 13, 2009.

Darlene F. Williams,

General Deputy Assistant Secretary for Administration.

[FR Doc. E9–6480 Filed 3–24–09; 8:45 am]

BILLING CODE 4210–67–P

DEPARTMENT OF HOUSING AND URBAN DEVELOPMENT

[Docket No. FR–5310–N–01]

Conference Call Meeting of the Manufactured Housing Consensus Committee

AGENCY: Office of the Assistant Secretary for Housing—Federal Housing Commissioner, HUD.

ACTION: Notice of upcoming meeting via conference call.

SUMMARY: This notice sets forth the schedule and proposed agenda of an upcoming meeting of the Manufactured Housing Consensus Committee (the Committee) to be held via telephone conference. This meeting is open to the general public, which may participate by following the instructions below.

DATES: The conference call meeting will be held on Tuesday, April 7, 2009, from 11 a.m. to 2 p.m. eastern daylight time.

ADDRESSES: Information concerning the conference call can be obtained from the Department's Consensus Committee

Administering Organization, the National Fire Protection Association (NFPA). Interested parties can link onto the NFPA Web site for instructions concerning how to participate, and for contact information for the conference call, in the section marked ''Highlights'' ''Manufactured Housing Consensus Committee Information'' ''Administering Organization''. The link can be found at: *http://www.hud.gov/offices/hsg/sfh/mhs/mhshome.cfm.* Alternately, interested parties may contact Jill McGovern of NFPA at (617) 984–7404 (this is not a toll-free number) for conference call information.

FOR FURTHER INFORMATION CONTACT: William W. Matchneer III, Associate Deputy Assistant Secretary, Office of Regulatory Affairs and Manufactured Housing, Department of Housing and Urban Development, 451 7th Street SW., Washington, DC 20410, telephone (202) 708–6409 (this is not a toll-free number). Persons who have difficulty hearing or speaking may access this number via TTY by calling the toll-free Federal Information Relay Service at (800) 877–8339.

SUPPLEMENTARY INFORMATION: Notice of this meeting is provided in accordance with Sections 10(a) and (b) of the Federal Advisory Committee Act (5 U.S.C. App. 2) and 41 CFR 102–3.150. The Manufactured Housing Consensus Committee was established under Section 604(a)(3) of the National Manufactured Housing Construction and Safety Standards Act of 1974, as amended, 42 U.S.C. 5403(a)(3). The Committee is charged with providing recommendations to the Secretary to adopt, revise, and interpret manufactured home construction and safety standards and procedural and enforcement regulations, and with developing and recommending proposed model installation standards to the Secretary.

The purpose of this conference call meeting is for the Committee to review and provide comments to the Secretary on a draft proposed rule for the On-Site Completion of Construction of Manufactured Homes.

Tentative Agenda

A. Roll Call.
B. Welcome and opening remarks.
C. Public testimony.
D. Full committee meeting and take actions on:
1. Ground anchor galvanization requirement.
2. Proposed bylaw changes.
3. Duct testing proposal.
4. Carbon monoxide detectors.
E. Adjournment.

Dated: March 18, 2009.

Brian D. Montgomery,

Assistant Secretary for Housing, Federal Housing Commissioner.

[FR Doc. E9–6482 Filed 3–24–09; 8:45 am]

BILLING CODE 4210–67–P

DEPARTMENT OF THE INTERIOR

Fish and Wildlife Service

[80221–1113–0000–C4]

Endangered and Threatened Wildlife and Plants; Initiation of 5-Year Reviews of 58 Species in California, Nevada, Arizona, and Utah; Availability of Completed 5-Year Reviews in California and Nevada

AGENCY: Fish and Wildlife Service, Interior.

ACTION: Notice of initiation of 5-year reviews; availability of completed 5-year reviews.

SUMMARY: We, the U.S. Fish and Wildlife Service, initiate 5-year reviews for 58 species under the Endangered Species Act of 1973, as amended (Act). We request any new information on these species that may have a bearing on their classification as endangered or threatened (see Table 1 below). Based on the results of these 5-year reviews, we will make a finding on whether these species are properly classified under the Act. We also indicate in this notice 42 5-year reviews we completed for species in California and Nevada in mid to late Fiscal Year (FY) 2008. Reviews we completed for 16 species in early FY 2008 were indicated in our previous initiation notice published in the **Federal Register** on March 5, 2008 (73 FR 11945).

DATES: To allow us adequate time to conduct these reviews, we must receive your information no later than May 26, 2009. However, we will continue to accept new information about any listed species at any time.

ADDRESSES: For instructions on how to submit information and review the information that we receive on these species, *see* ''Public Solicitation of New Information.''

FOR FURTHER INFORMATION CONTACT: For species-specific information, contact the appropriate person listed under ''Public Solicitation of New Information.'' For contact information about completed 5-year reviews, see ''Completed 5-Year Reviews.'' Individuals who are hearing-impaired or speech-impaired may call the Federal Relay Service at (800) 877–8337 for TTY assistance.

SUPPLEMENTARY INFORMATION:

Why Do We Conduct a 5-Year Review

Under the Endangered Species Act (Act) (16 U.S.C. 1531 *et seq.*), we maintain a List of Endangered and Threatened Wildlife and Plants at 50 CFR 17.11 (for animals) and 17.12 (for plants) (List). We amend the List by publishing final rules in the **Federal Register**. Section 4(c)(2)(A) of the Act requires that we conduct a review of listed species at least once every 5 years. Section 4(c)(2)(B) requires that we determine (1) whether a species no longer meets the definition of threatened or endangered and should be removed from the List (delisted); (2) whether a species listed as endangered more properly meets the definition of threatened and should be reclassified to threatened; or (3) whether a species listed as threatened more properly meets the definition of endangered and should be reclassified to endangered. Using the best scientific and commercial data available, a species will be considered for delisting if the data substantiate that the species is neither endangered nor threatened for one or more of the following reasons: (1) The species is considered extinct; (2) the species is considered to be recovered; and/or (3) the original data available when the species was listed, or the interpretation of such data, were in error. Any change in Federal classification requires a separate rulemaking process. We are requesting submission of any new information (best scientific and commercial data) on these species since they were originally listed or since the species' most recent status review.

Our regulations at 50 CFR 424.21 require that we publish a notice in the **Federal Register** announcing those species currently under review. This notice announces initiation of our active review of 58 species in California, Nevada, Arizona, and Utah. This notice announces initiation of our active review of the species in Table 1.

TABLE 1—SUMMARY OF LISTING INFORMATION, 11 WILDLIFE SPECIES AND 47 PLANT SPECIES IN CALIFORNIA, NEVADA, ARIZONA, AND UTAH

Common name	Scientific name	Status	Where listed	Final listing rule
Animals				
Alameda whipsnake (=striped racer)	*Masticophis lateralis euryxanthus*	Threatened	U.S.A. (CA)	62 FR 64306; 12/05/1997
Ash Meadows speckled dace	*Rhinichthys osculus navadensis*	Endangered	U.S.A. (NV)	47 FR 19995; 05/10/1982
California condor	*Gymnogyps californianus*	Endangered	U.S.A. only, except where listed as an experimental population below.	32 FR 4001; 03/11/1967
		Experimental Population, Non-Essential.	U.S.A. (specific portions of Arizona, Nevada, and Utah).	61 FR 54044; 10/16/1996
Delta smelt	*Hypomesus transpacificus*	Threatened	U.S.A. (CA)	58 FR 12854; 03/05/1993
Devils Hole pupfish	*Cyprinodon diabolis*	Endangered	U.S.A. (NV)	32 FR 4001; 03/11/1967
Moapa dace	*Moapa coriacea*	Endangered	U.S.A. (NV)	32 FR 4001; 03/11/1967
Ohlone tiger beetle	*Cicindela ohlone*	Endangered	U.S.A. (CA)	66 FR 50340; 10/03/2001
Peninsular bighorn sheep	*Ovis Canadensis*	Endangered	U.S.A. (CA), Peninsular Ranges.	63 FR 13134; 03/18/1998
Santa Ana sucker	*Catostomus santaanae*	Threatened	U.S.A. (CA), Los Angeles River basin, San Gabriel River basin, Santa Ana River basin.	65 FR 19686; 04/12/2000
Southern sea otter	*Enhydra lutris nereis*	Threatened	U.S.A. (CA)	42 FR 2968; 01/14/1977
Warm Springs pupfish	*Cyprinodon nevadensis pectoralis*	Endangered	U.S.A. (NV)	35 FR 16047; 10/13/1970
Plants				
Ash Meadows blazing star	*Mentzelia leucophylla*	Threatened	U.S.A. (NV)	50 FR 20777; 05/20/1985
Ash Meadows ivesia	*Ivesia kingii* var. *eremica*	Threatened	U.S.A. (NV)	50 FR 20777; 05/20/1985
Big-leaved crownbeard	*Verbesina dissita*	Threatened	U.S.A. (CA), Mexico	61 FR 52370; 10/07/1996
California Orcutt grass	*Orcuttia californica*	Endangered	U.S.A. (CA)	58 FR 41384; 08/03/1993
California seablite	*Suaeda californica*	Endangered	U.S.A. (CA)	59 FR 64613; 12/15/1994
Coyote ceanothus	*Ceanothus ferrisae*	Endangered	U.S.A. (CA)	60 FR 6671; 02/03/1995
Del Mar manzanita	*Arctostaphylos glandulosa* subsp. *crassifolia.*	Endangered	U.S.A. (CA), Mexico	61 FR 52370; 10/07/1996
El Dorado bedstraw	*Galium californicum* subsp. *sierrae*	Endangered	U.S.A. (CA)	61 FR 54358; 10/18/1996
Encinitas baccharis	*Baccharis vanessae*	Threatened	U.S.A. (CA)	61 FR 52370; 10/07/1996
Fountain thistle	*Cirsium fontinale* var. *fontinale*	Endangered	U.S.A. (CA)	60 FR 6671; 02/03/1995
Gambel's watercress	*Nasturtium gambelii*	Endangered	U.S.A. (CA)	58 FR 41378; 08/03/1993
Hoffman's slender-flowered gilia	*Gila tenuiflora* subsp. *hoffmannii*	Endangered	U.S.A. (CA)	61 FR 40954; 07/31/1997
Island bedstraw	*Galium buxifolium*	Endangered	U.S.A. (CA)	61 FR 40954; 07/31/1997
Island rush-rose	*Helianthemum greeneii*	Threatened	U.S.A. (CA)	61 FR 40954; 07/31/1997
Laguna Beach liveforever	*Dudleya stolonifera*	Threatened	U.S.A. (CA)	63 FR 54938; 10/13/1998
Layne's butterweed	*Senecio layneae*	Threatened	U.S.A. (CA)	61 FR 54358; 10/18/1996
Marin dwarf-flax	*Hesperolinon congestum*	Threatened	U.S.A. (CA)	60 FR 6671; 02/03/1995

TABLE 1—SUMMARY OF LISTING INFORMATION, 11 WILDLIFE SPECIES AND 47 PLANT SPECIES IN CALIFORNIA, NEVADA, ARIZONA, AND UTAH—Continued

Common name	Scientific name	Status	Where listed	Final listing rule
McDonald's rock-cress	*Arabis macdonaldiana*	Endangered	U.S.A. (CA)	43 FR 44810; 09/28/1978
Metcalf Canyon jewelflower	*Streptanthus albidus* subsp. *albidus*	Endangered	U.S.A. (CA)	60 FR 6671; 02/03/1995
Monterey clover	*Trifolium trichocalyx*	Endangered	U.S.A. (CA)	63 FR 43100; 08/12/1998
Nipomo Mesa lupine	*Lupinus nipomensis*	Endangered	U.S.A. (CA)	65 FR 14888; 03/20/2000
Otay mesa-mint	*Pogogyne nudiuscula*	Endangered	U.S.A. (CA), Mexico	58 FR 41384; 08/03/1993
Pallid manzanita	*Arctostaphylos pallida*	Threatened	U.S.A. (CA)	63 FR 19842; 04/22/1998
Pedate checkermallow	*Sidalcea pedata*	Endangered	U.S.A. (CA)	49 FR 34497; 08/31/1984
Pennell's bird's-beak	*Cordylanthus tenuis* subsp. *capillaris*	Endangered	U.S.A. (CA)	60 FR 6671; 02/03/1995
Pine Hill ceanothus	*Ceanothus roderickii*	Endangered	U.S.A. (CA)	61 FR 54358; 10/18/1996
Pine Hill flannelbush	*Fremontodendron californicum* subsp. *decumbens.*	Endangered	U.S.A. (CA)	61 FR 54358; 10/18/1996
Presidio clarkia	*Clarkia franciscana*	Endangered	U.S.A. (CA)	60 FR 6671; 02/03/1995
Robust spineflower	*Chorizanthe robusta* var. *robusta*	Endangered	U.S.A. (CA)	59 FR 5499; 02/04/1994
San Diego ambrosia	*Ambrosia pumila*	Endangered	U.S.A. (CA), Mexico	67 FR 44372; 07/02/2002
San Diego button-celery	*Eryngium aristulatum* var. *parishii*	Endangered	U.S.A. (CA)	58 FR 41384; 08/03/1993
San Diego mesa-mint	*Pogogyne abramsii*	Endangered	U.S.A. (CA)	43 FR 44810; 09/28/78
San Mateo thornmint	*Acanthomintha obovata* subsp. *duttonii*	Endangered	U.S.A.(CA)	50 FR 37858; 09/18/1985
San Mateo woolly sunflower	*Eriophyllum latilobum*	Endangered	U.S.A.(CA)	60 FR 6671; 02/03/1995
Santa Ana River woolly-star	*Eriastrum densifolium* subsp. *sanctorum*	Endangered	U.S.A. (CA)	52 FR 36265; 09/28/1987
Santa Clara Valley dudleya	*Dudleya setchellii*	Endangered	U.S.A.(CA)	60 FR 6671; 02/03/1995
Santa Cruz Island dudleya	*Dudleya nesiotica*	Threatened	U.S.A. (CA)	61 FR 40954; 07/31/1997
Scotts Valley polygonum	*Polygonum hickmanii*	Endangered	U.S.A. (CA)	68 FR 16979; 04/08/2003
Scotts Valley spineflower	*Chorizanthe robusta* var. *hartwegii*	Endangered	U.S.A. (CA)	59 FR 5499; 02/04/1994
Slender-petaled mustard	*Thelypodium stenopetalum*	Endangered	U.S.A. (CA)	49 FR 34497; 08/31/1984
Sonoma alopecurus	*Alopecurus aequalis* var. *sonomensis*	Endangered	U.S.A.(CA)	62 FR 54791; 10/22/1997
Sonoma spineflower	*Chorizanthe valida*	Endangered	U.S.A.(CA)	57 FR 27848 06/22/1992
Stebbins' morning-glory	*Calystegia stebbinsii*	Endangered	U.S.A.(CA)	61 FR 54358; 10/18/1996
Ventura marsh milk-vetch	*Astragalus pycnostachyus* var. *lanosissimus.*	Endangered	U.S.A. (CA)	66 FR 27901; 05/21/2001
Vine Hill clarkia	*Clarkia imbricata*	Endangered	U.S.A.(CA)	62 FR 54791; 10/22/1997
White-rayed pentachaeta	*Pentachaeta bellidiflora*	Endangered	U.S.A. (CA)	60 FR 6671; 02/03/1995
Yadon's piperia	*Piperia yadonii*	Endangered	U.S.A. (CA)	63 FR 43100; 08/12/1998

What Information Do We Consider in the Review

In our 5-year review, we consider all new information available at the time of the review. In conducting these reviews, we consider the best scientific and commercial data that has become available since the current listing determination or the most recent status review, such as—(A) Species biology including, but not limited to, population trends, distribution, abundance, demographics, and genetics; (B) Habitat conditions including, but not limited to, amount, distribution, and suitability; (C) Conservation measures that have been implemented that benefit the species;

(D) Threat status and trends (see the five factors under the heading ''How Do We Determine Whether a Species is Endangered or Threatened?''); and (E) Other new information, data, or corrections including, but not limited to, taxonomic or nomenclatural changes, identification of erroneous information contained in the List, and improved analytical methods.

Public Solicitation of New Information

We request any new information concerning the status of these wildlife and plant species. See ''What Information Do We Consider in Our Review?'' for specific criteria. If you submit information, support it with documentation such as maps, bibliographic references, methods used to gather and analyze the data, and/or copies of any pertinent publications, reports, or letters by knowledgeable sources. We specifically request information regarding data from any systematic surveys, as well as any studies or analysis of data that may show population size or trends; information pertaining to the biology or ecology of these species; information regarding the effects of current land management on population distribution and abundance; information on the current condition of habitat; and recent information regarding conservation measures that have been implemented to benefit the species. Additionally, we specifically request information regarding the current distribution of populations and evaluation of threats faced by the species in relation to the five listing factors (as defined in section 4(a)(1) of the Act) and the species' listed status as judged against the definition of threatened or endangered. Finally, we solicit recommendations pertaining to the development of, or potential updates to, recovery plans and additional actions or studies that would benefit these species in the future.

Our practice is to make information, including names and home addresses of respondents, available for public review. Before including your address, telephone number, e-mail address, or other personal identifying information in your response, you should be aware that your entire submission—including your personal identifying information—may be made publicly available at any time. While you can ask us in your response to withhold your personal identifying information from public review, we cannot guarantee that we will be able to do so. We will not consider anonymous comments. To the extent consistent with applicable law, we will make all submissions from organizations or businesses, and from individuals identifying themselves as representatives or officials of organizations or businesses, available for public inspection in their entirety. Comments and materials received will be available for public inspection, by appointment, during normal business hours at the offices where the comments are submitted.

Mail or hand-deliver information on the following species to the U.S. Fish and Wildlife Service at the corresponding address below. You may also view information we receive in response to this notice, as well as other documentation in our files, at the following locations by appointment, during normal business hours.

For the McDonald's rock-cress, send information to Field Supervisor, Attention: 5-Year Review, U.S. Fish and Wildlife Service, Arcata Fish and Wildlife Office, 1655 Heindon Road, Arcata, CA 95521. Information may also be submitted electronically at *fw8arma@fws.gov.* To obtain further information, contact Dave Imper at the Arcata Fish and Wildlife Office at (707) 822–7201.

For the Peninsular bighorn sheep, Santa Ana sucker, big-leaved crownbeard, California Orcutt grass, Del Mar manzanita, Encinitas baccharis, Laguna Beach liveforever, Otay mesa-mint, pedate checkermallow, San Diego ambrosia, San Diego button-celery, San Diego mesa-mint, Santa Ana River woolly-star, and slender-petaled mustard, send information to Field Supervisor, *Attention:* 5-Year Review, U.S. Fish and Wildlife Service, Carlsbad Fish and Wildlife Office, 6010 Hidden Valley Road, Carlsbad, CA 92011. Information may also be submitted electronically at *fw8cfwocomments@fws.gov.* To obtain further information, contact Scott Sobiech at the Carlsbad Fish and Wildlife Office at (760) 431–9440.

For the Alameda whipsnake (=striped racer), Delta smelt, coyote ceanothus, El Dorado bedstraw, fountain thistle, Layne's butterweed, Marin dwarf-flax, Metcalf Canyon jewelflower, pallid manzanita, Pennell's bird's-beak, Pine Hill ceanothus, Pine Hill flannelbush, Presidio clarkia, San Mateo thornmint, San Mateo woolly sunflower, Santa Clara Valley dudleya, Sonoma alopecurus, Sonoma spineflower, Stebbins' morning-glory, Vine Hill clarkia, and white-rayed pentachaeta, send information to Field Supervisor, Attention: 5-Year Review, U.S. Fish and Wildlife Service, Sacramento Fish and Wildlife Office, 2800 Cottage Way, Room W–2605, Sacramento, CA 95825. Information may also be submitted electronically at *fw1sfo5year@fws.gov.* To obtain further information, contact Kirsten Tarp at the Sacramento Fish and Wildlife Office at (916) 414–6600.

For the Ohlone tiger beetle, southern sea otter, California seablite, Gambel's watercress, Hoffman's slender-flowered gilia, island bedstraw, island rush-rose, Monterery clover, Nipomo Mesa lupine, robust spineflower, Santa Cruz Island dudleya, Scotts Valley polygonum, Scotts Valley spineflower, Ventura marsh milk-vetch, and Yadon's piperia, send information to Field Supervisor, *Attention:* 5-Year Review, U.S. Fish and Wildlife Service, Ventura Fish and Wildlife Office, 2493 Portola Road, Suite B, Ventura, CA 93003. Information may also be submitted electronically at *fw1vfwo5year@fws.gov.* To obtain further information on the animal species, contact Mike McCrary at the Ventura Fish and Wildlife Office at (805) 644–1766. To obtain further information on the plant species, contact Connie Rutherford at the Ventura Fish and Wildlife Office at (805) 644–1766.

For the California condor, send information to Condor Coordinator, Attention: 5-Year Review, Hopper Mountain National Wildlife Refuge Complex, U.S. Fish and Wildlife Service, 2493 Portola Road, Suite A, Ventura, CA 93003. Information may also be submitted electronically at *fw1vfwo5year@fws.gov.* To obtain further information, contact Jesse Grantham at the Hopper Mountain National Wildlife Refuge Complex at (805) 644–5185.

For the Ash Meadows speckled dace, Devils Hole pupfish, Moapa dace, Warm Springs pupfish, Ash Meadows blazing star, and Ash Meadows ivesia, send information to Field Supervisor, *Attention:* 5-Year Review, U.S. Fish and Wildlife Service, Nevada Fish and Wildlife Office, 4701 N. Torrey Pines Drive, Las Vegas, NV 89130. Information may also be submitted electronically at *fw1nfwo_5yr@fws.gov.* To obtain further information, contact Janet Bair at the Southern Nevada Field at (702) 515–5230.

All electronic information must be submitted in Text format or Rich Text format. Include the following identifier in the subject line of the e-mail: Information on 5-year review for [NAME OF SPECIES], and include your name and return address in the body of your message.

How Are These Species Currently Listed

The current listing status of species for which 5-year reviews are being initiated by this notice is identified in Table 1 above. The current status may

also be found on the List, which covers all endangered and threatened species, and which is available on our Internet site at *http://endangered.fws.gov/wildlife.html#Species.*

Definitions Related to This Notice

To help you submit information about the species we are reviewing, we provide the following definitions:

Species includes any species or subspecies of fish, wildlife, or plant, and any distinct population segment of any species of vertebrate, which interbreeds when mature;

Endangered species means any species that is in danger of extinction throughout all or a significant portion of its range; and

Threatened species means any species that is likely to become an endangered species within the foreseeable future throughout all or a significant portion of its range.

Experimental population means any population (including any offspring arising solely therefrom) authorized by the Secretary of the Interior for release outside the current range of nonexperimental populations of the same species, but only when, and at such times as, the population is wholly separate geographically from nonexperimental populations of the same species. Each member of a nonessential experimental population shall be treated, except when it occurs in an area within the National Wildlife Refuge System or the National Park System, as a species proposed to be listed under section 4 of the Endangered Species Act.

How Do We Determine Whether a Species Is Endangered or Threatened

Section 4(a)(1) of the Act requires that we determine whether a species is endangered or threatened based on one or more of the five following factors: (A) The present or threatened destruction, modification, or curtailment of its habitat or range; (B) Overutilization for commercial, recreational, scientific, or educational purposes; (C) Disease or predation; (D) The inadequacy of existing regulatory mechanisms; or (E) Other natural or manmade factors affecting its continued existence. Section 4(b)(1)(A) of the Act requires that our determination be made on the basis of the best scientific and commercial data available.

What Could Happen as a Result of Our Review

For each species under review, if we find new information that indicates a change in classification may be warranted, we may propose a new rule that could do one of the following: (a) Reclassify the species from threatened to endangered (uplist); (b) reclassify the species from endangered to threatened (downlist); or (c) remove the species from the List (delist). If we determine that a change in classification is not warranted, then the species will remain on the List under its current status.

Completed 5-Year Reviews

We also take this opportunity to inform the public of 42 5-year reviews that we completed in mid to late FY 2008 for species in California and Nevada. These 42 reviews can be found at *http://www.fws.gov/cno/es/5yr.html.* Any recommended change in listing status will require a separate rulemaking process. The table below summarizes the results of these reviews:

TABLE 2—SUMMARY OF 42 SPECIES IN CALIFORNIA AND NEVADA FOR WHICH 5-YEAR REVIEWS WERE COMPLETED IN MID TO LATE FY 2008.

Common name	Scientific name	Recommendation	Lead fish and wildlife office	Contact
ANIMALS				
Behren's silverspot butterfly	*Speyeria zerene behrensii*	No status change	Arcata	Matt Baun; (530) 842–5763
Delhi Sands flower-loving fly	*Rhaphiomidas terminatus abdominalis*	No status change	Carlsbad	Jane Hendron; (760) 431–9440
El Segundo blue butterfly	*Euphilotes battoides allyni*	No status change	Carlsbad	Jane Hendron; (760) 431–9440
Independence Valley speckled dace	*Rhinichthys osculus lethoporus*	No status change	Nevada	Jeannie Stafford; (775) 861–6300
Inyo California towhee	*Pipilo fuscus eremophilus*	Delist	Ventura	Lois Grunwald; (805) 644–1766
Lange's metalmark butterfly	*Apodemia mormo langei*	No status change	Sacramento	Al Donner; (916) 414–6600
Paiute cutthroat trout	*Oncorhynchus clarkii seleniris*	No status change	Nevada	Jeannie Stafford; (775) 861–6300
Palos Verdes blue butterfly	*Glaucopsyche lygdamus palosverdensis.*	No status change	Carlsbad	Jane Hendron; (760) 431–9440
Riverside fairy shrimp	*Streptocephalus wootoni*	No status change	Carlsbad	Jane Hendron; (760) 431–9440
San Diego fairy shrimp	*Branchinecta sandiegonensis*	No status change	Carlsbad	Jane Hendron; (760) 431–9440
Sierra Nevada bighorn sheep	*Ovis canadensis californiana*	No status change	Ventura	Lois Grunwald; (805) 644–1766
PLANTS				
Antioch Dunes evening-primrose	*Oenothera deltoides* subsp. *howellii*	No status change	Sacramento	Al Donner; (916) 414–6600
Ash-grey (Indian) paintbrush	*Castilleja cinerea*	No status change	Carlsbad	Jane Hendron; (760) 431–9440
Bear Valley sandwort	*Arenaria ursine*	No status change	Carlsbad	Jane Hendron; (760) 431–9440
Ben Lomond wallflower	*Erysimum teretifolium*	No status change	Ventura	Lois Grunwald; (805) 644–1766
Burke's goldfields	*Lasthenia burkei*	No status change	Sacramento	Al Donner; (916) 414–6600

TABLE 2—SUMMARY OF 42 SPECIES IN CALIFORNIA AND NEVADA FOR WHICH 5-YEAR REVIEWS WERE COMPLETED IN MID TO LATE FY 2008.—Continued

Common name	Scientific name	Recommendation	Lead fish and wildlife office	Contact
Butte County meadowfoam	*Limnanthes floccosa* subsp. *californica*	No status change	Sacramento	Al Donner; (916) 414–6600
California taraxacum	*Taraxacum californicum*	No status change	Carlsbad	Jane Hendron; (760) 431
Colusa grass	*Neostapfia colusana*	No status change	Sacramento	Al Donner; (916) 414–6600
Contra Costa goldfields	*Lasthenia congugens*	No status change	Sacramento	Al Donner; (916) 414–6600
Contra Costa wallflower	*Erysimum capitatum* var. *angustatum*	No status change	Sacramento	Al Donner; (916) 414–6600
Few-flowered navarretia	*Navarretia leucocephala* subsp. *pauciflora.*	No status change	Sacramento	Al Donner; (916) 414–6600
Gowen cypress	*Callitropsis goveniana*	No status change	Ventura	Lois Grunwald; (805) 644
Island barberry	*Berberis pinnata* subsp. *insularis*	No status change	Ventura	Lois Grunwald; (805) 644
Island phacelia	*Phacelia insularis* var. *insularis*	No status change	Ventura	Lois Grunwald; (805) 644
Lane Mountain milk-vetch	*Astragalus jaegerianus*	Downlist	Ventura	Lois Grunwald; (805) 644
Lyon's pentachaeta	*Pentachaeta lyonii*	No status change	Ventura	Lois Grunwald; (805) 644
Marsh sandwort	*Arenaria paludicola*	No status change	Ventura	Lois Grunwald; (805) 644
Menzies' wallflower	*Erysimum menziesii*	No status change	Arcata	Matt Baun; (530) 842–5763
Monterey gilia	*Gilia tenuiflora* subsp. *arenaria*	No status change	Ventura	Lois Grunwald; (805) 644
Morro manzanita	*Arctostaphylos morroensis*	No status change	Ventura	Lois Grunwald; (805) 644
Peirson's milk-vetch	*Astragalus magdalenae* var. *peirsonii*	No status change	Carlsbad	Jane Hendron; (760) 431–9440
Purple amole	*Chlorogalum purpureum*	No status change	Ventura	Lois Grunwald; (805) 644–1766
Sacramento Orcutt grass	*Orcuttia viscida*	No status change	Sacramento	Al Donner; (916) 414–6600
San Bernardino bluegrass	*Poa atropurpurea*	No status change	Carlsbad	Jane Hendron; (760) 431–9440
San Clemente Island larkspur	*Delphinium variegatum* subsp. *kinkiense.*	Downlist	Carlsbad	Jane Hendron; (760) 431–9440
San Jacinto Valley crownscale	*Atriplex coronata* var. *notatior*	No status change	Carlsbad	Jane Hendron; (760) 431–9440
Sebastopol meadowfoam	*Limnanthes vinculans*	No status change	Sacramento	Al Donner; (916) 414–6600
Sonoma sunshine	*Blennosperma bakeri*	No status change	Sacramento	Al Donner; (916) 414–6600
Southern mountain buckwheat	*Eriogonum kennedyi* var. *austromontanum.*	No status change	Carlsbad	Jane Hendron; (760) 431
Vail Lake ceanothus	*Ceanothus ophiochilus*	No status change	Carlsbad	Jane Hendron; (760) 431
Willowy monardella	*Monardella linoides* subsp. *viminea*	No status change	Carlsbad	Jane Hendron; (760) 431

Authority This document is published under the authority of the Endangered Species Act of 1973, as amended (16 U.S.C. 1531 *et seq.*).

Michael Fris,

Acting Regional Director, Region 8, U.S. Fish and Wildlife Service.

[FR Doc. E9–5520 Filed 3–24–09; 8:45 am]

BILLING CODE 4310–55–P

DEPARTMENT OF THE INTERIOR

Bureau of Indian Affairs

Grant Program To Assess, Evaluate and Promote Development of Tribal Energy and Mineral Resources

AGENCY: Bureau of Indian Affairs, Interior.

ACTION: Solicitation of Proposals.

SUMMARY: The Energy and Mineral Development Program (EMDP) provides funding to tribes with the mission goal of assessing, evaluating, and promoting energy and mineral resources on Indian trust lands for the economic benefit of Indian mineral owners. To achieve these goals, the Department of the Interior's Office of Indian Energy and Economic Development (IEED), through its Division of Energy and Mineral Development (DEMD) office, is soliciting proposals from tribes. The Department will use a competitive

evaluation process to select several proposed projects to receive an award.

DATES: Submit grant proposals on or before June 23, 2009. We will not consider grant proposals received after this date.

ADDRESSES: Mail or hand-carry to the Department of the Interior, Division of Energy and Mineral Development, *Attention:* Energy and Mineral Development Program, 12136 W. Bayaud Avenue, Suite 300, Lakewood, CO 80228.

FOR FURTHER INFORMATION CONTACT: If you have questions about the EMDP, or have technical questions about the commodity you wish to assess or develop, please contact the appropriate DEMD persons listed below:

- *General Questions about the EMDP Program and Submission Process:* Robert Anderson, *Tel:* (720) 407–0602; E-mail: *robert.anderson@bia.gov*;
- *For Additional Copies of the Proposal Writing Guidelines Manual:* Tahnee KillsCrow, *Tel:* (720) 407–0655; E-mail: *tahnee.killscrow@bia.gov*;
- *Mineral Projects (Precious Metals, Sand and Gravel):* Lynne Carpenter, *Tel:* (720) 407–0605, E-mail: *lynne.chastain-carpenter@bia.gov*, or David Holmes, *Tel:* (720) 407–0609, E-mail: *david.holmes@bia.gov*;
- *Conventional Energy Projects (Oil, Natural Gas, Coal):* Bob Just, *Tel:* (720) 407–0611, E-mail: *robert.just@bia.gov*;
- *Renewable Energy Projects (Biomass, Wind, Solar):* Winter Jojola-Talburt, *Tel:* (720) 407–0668, E-mail: *winter.jojola-talburt@bia.gov*; or
- *Geothermal Energy:* Roger Knight, *Tel:* (720) 407–0613, E-mail: *roger.knight@bia.gov*.

See the **SUPPLEMENTARY INFORMATION** section of this notice for information on requests for technical assistance.

SUPPLEMENTARY INFORMATION:

A. Background
B. Items to Consider Before Preparing an Application for an Energy and Mineral Development Grant
C. How to Prepare an Application for Energy and Mineral Development Funding
D. Submission of Application in Digital Format
E. Application Evaluation and Administrative Information
F. When to Submit
G. Where to Submit
H. Transfer of Funds
I. Reporting Requirements for Award Recipients
J. Requests for Technical Information

A. Background

Section 103 of the Indian Self-Determination Act, Public Law 93–638, as amended by Public Law 100–472, contains the contracting mechanism for energy and mineral development funded programs.

The Department of the Interior's Office of IEED, through the DEMD office located in Lakewood, Colorado, administers and manages the EMDP. The objectives of this solicitation are to receive proposals for energy and mineral development projects in the areas of exploration, assessment, development, feasibility and market studies.

Energy includes conventional energy resources such as oil, gas, coal, uranium, and coal bed gas, and renewable energy resources such as wind, solar, biomass, hydro and geothermal. Mineral resources include industrial minerals (*e.g.*, sand, gravel), precious minerals (*e.g.*, gold, silver, platinum), base minerals (*e.g.*, lead, copper, zinc), and ferrous metal minerals (*e.g.*, iron, tungsten, chromium).

DEMD's goal is to assist tribes to achieve economic benefits from their energy and mineral resources. The purpose of the program is to expand the knowledge base through which tribes, either by themselves or with industry partners, can bring new energy and mineral resources into the marketplace through a comprehensive understanding of their undeveloped resource potential. A strong knowledge base will also ensure that new resources are produced in an environmentally acceptable manner.

Each year, DEMD usually receives more energy and mineral development request applications than can be funded in that year. The DEMD has discretion for awarding funds and requires that the tribes compete for such funds on an annual basis. The DEMD has established ranking and paneling procedures with defined criteria for rating the merits of proposals to make the award of the limited funds as fair and equitable as possible.

The EMDP program is funded under the non-recurring appropriation of the Bureau of Indian Affairs's (BIA) budget. Congress appropriates funds for EMDP funding on a year-to-year basis. Thus, while some projects may extend over several years, funding for successive years depends on each fiscal year's appropriations.

B. Items To Consider Before Preparing an Application for an Energy and Mineral Development Grant

1. Trust Land Status

The EMDP's funding can only be made available to tribes whose lands are held in trust or restricted fee by the Federal government. Congress has appropriated these funds for the Federal development of energy and mineral resources only on Indian trust or restricted fee lands.

2. Tribes' Compliance History

The DEMD will monitor all EMDP grants for statutory and regulatory compliance to assure that awarded funds are correctly applied to approved projects. Tribes that expend funds on unapproved functions may forfeit remaining funds in that proposal year, and possibly for any future EMDP funding. Consequently, DEMD may request a tribe to provide a summary of any funds it has received in past years through other projects approved by DEMD, and DEMD may conduct a review of prior award expenditures before making a decision on current year proposals.

3. BIA Sanction List

Tribes who are currently under BIA sanction resulting from non-compliance with the Single Audit Act may be ineligible from being considered for an award.

4. Completion of Previous Energy and Mineral Development Projects

Generally, the DEMD will not support nor recommend additional funding for a project until all project functions scheduled for completion the previous year have been documented by the tribe and reviewed by the DEMD.

Under some circumstances, delays encountered in performing the project that are beyond the control of the tribe or its consultant will be taken into consideration when making decisions on future year EMDP awards. Such acceptable delays may include late delivery of funding awards to the tribal project, difficulty in finding appropriate contractors to perform project functions, permitting issues, and weather delays.

5. Multi-Year Projects

The DEMD cannot award multi-year funding for a project. Funding available for the EMDP is subject to annual appropriations by Congress and therefore DEMD can only consider single-year funded projects. Generally, energy and mineral development projects are designed to be completed in one year. It is acceptable that a project may require more than one year to complete due to circumstances such as weather, availability of the consultant, or scope of project.

The EMDP's projects requiring funding beyond one-year intervals should be grouped into discrete, single-year units of operation, and then submitted as individual proposals for

consideration of EMDP award funding. Tribes must be aware, however, that there is no absolute guarantee of EMDP awards being available for future years of a multi-year project due to the discretionary nature of EMDP award funding.

6. Use of Existing Data

The DEMD maintains a comprehensive set of tribal data and information. The DEMD has spent considerable time and expense in collecting digital land grids, geographic information system (GIS) data and imagery data for many reservations. Monthly well status and production data, geophysical data (such as seismic data), geology and engineering data, etc., are all stored at DEMD's offices. All of these data sets are available to tribes to reduce the cost of their investigations.

Budget line items will not be allowed for data or products that reside at DEMD. The tribe or the tribe's consultant must first check with DEMD for availability of these data sets on the reservation they are investigating. If DEMD does not have a particular data set, then EMDP funds may be used to acquire such data.

When a proposal includes the acquisition of new data, the tribe should thoroughly search for preexisting data to ensure there is no duplication. If older data does exist, it may have considerable value. It may be updated or improved upon, either by the DEMD or by the tribe's consultant.

7. Using Technical Services at DEMD

The DEMD has many in-house technical capabilities and services that the tribes may wish to use. All services provided by DEMD are without charge to the tribes. Tribes can obtain maximum benefit from energy and mineral development studies by first using DEMD's services, or by using DEMD services in conjunction with outside consultants. Services available at DEMD include:

- Technical literature search of previous investigations and work performed in and around reservations using reference materials located nearby, such as the U.S. Geological Survey (USGS) library in Denver, Colorado, or the Colorado School of Mines library in Golden, Colorado;
- Well production history analysis, decline curve and economic analysis of data obtained through DEMD's in-house databases;
- Well log interpretation, including correlation of formation tops, identification of producing horizons, and generation of cross-sections;
- Technical mapping capabilities, using data from well log formation tops and seismic data;
- Contour mapping capabilities, including isopachs, calculated grids, color-fill plotting, and posting of surface features, wells, seismic lines and legal boundaries;
- Seismic data interpretation and data processing;
- Three dimensional modeling of mine plans;
- Economic analysis and modeling for energy and solid mineral projects; and
- Marketing studies.

8. What the Energy and Mineral Development Program Cannot Fund

As stated above, these funds are specifically for energy and mineral development project work only. Examples of elements that cannot be funded include:

- Establishing or operating a tribal office, and/or purchase of office equipment not specific to the assessment project. Tribal salaries may be included only if the personnel are directly involved in the project and only for the duration of the project;
- Indirect costs and overhead as defined by the Federal Acquisition Regulation (FAR);
- Purchase of equipment that is used to perform the EMDP project, such as computers, vehicles, field gear, etc. (however, the leasing of this type of equipment for the purpose of performing energy and mineral development is allowed);
- Purchasing and/or leasing of equipment for the development of energy and mineral resources (this would include such items as well drilling rigs, backhoes, bulldozers, cranes, trucks, etc.);
- Drilling of wells for the sale of hydrocarbons, geothermal resources, other fluid and solid minerals (however, funds may be used for the drilling of exploration holes for testing, sampling, coring, or temperature surveys);
- Legal fees;
- Application fees associated with permitting;
- Research and development of unproved technologies;
- Training;
- Contracted negotiation fees;
- Purchase of data that is available through DEMD; and
- Any other activities not authorized by the tribal resolution or by the award letter.

9. Who Performs Energy and Mineral Development Studies?

The tribe determines who will perform the energy and mineral development work, such as a consultant, a private company, or other sources described in the list below. The tribe may also request the BIA to perform the work.

A tribe has several choices in contracting work performed under an energy and mineral development project:

- A private company (although that company must not be competing for exploration or development rights on the tribe's lands);
- An experienced and qualified scientific consultant; or
- A Federal government agency (such as USGS or the U.S. Department of Energy (DOE)) or a State government agency (such as a State geological survey).

There are no requirements or restrictions on how the tribe performs their contracting function for the consultant or company. The tribe is free to issue the contract through a sole source selection or through competitive bidding. This determination will depend on the tribe's own policies for contracting procedures.

C. How To Prepare an Application for Energy and Mineral Development Funding

The application shall be prepared as set forth herein to provide a standard basis for evaluation and to ensure that each application will be uniform as to format and sequence. Applications are expected to be prepared in accordance with this section. A complete energy and mineral development request must contain the following components:

- A current tribal resolution authorizing the proposed project;
- A proposal describing the planned activities and deliverable products; and
- A detailed budget estimate.

DEMD will examine every request for the mandatory components. Energy and mineral development requests that do not contain all of the mandatory components will be considered incomplete and returned to the tribe, with an explanation. Tribes will then be allowed to correct all deficiencies and resubmit the proposal for consideration on or before the deadline.

A detailed description of each of the required components follows.

1. *Mandatory Component 1:* Tribal Resolution.

The tribal resolution must be current, and must be signed. It must authorize tribal approval for an EMDP proposed project in the same fiscal year as that of the energy and mineral development proposal and must explicitly refer to the assessment proposal being submitted. The tribal resolution must also include:

(a) A description of the commodity or commodities to be studied;

(b) A statement that the tribe is willing to consider development of any potential energy or mineral resource discovered;

(c) A statement describing how the tribe prefers to have the energy or mineral program conducted (*i.e.*, through the sole utilization of DEMD in-house professional staff, in conjunction with tribal professional staff, private contractors/consultants, or through other acceptable means); and

(d) A statement that the tribe will consider public release of information obtained from the energy and mineral development study upon request from DEMD. (Public release is meant to include publications, a poster session, attending a property fair, or giving an oral presentation at industry or Federal meetings and conferences.)

Note: Any information in the possession of DEMD or submitted to DEMD throughout the EMDP process, including the final energy and mineral development study, are government records and may be subject to disclosure to third parties under the Freedom of Information Act (FOIA), 5 U.S.C. 552, and the Department of the Interior's FOIA regulations at 43 CFR part 2, unless a FOIA exemption or exception applies or other provisions of law protect the information. A tribe may, but is not required to, designate information it submits as confidential commercially or financially sensitive information, as applicable in any submissions it makes throughout the EMDP process. If DEMD receives a FOIA request for any such information, it will follow the procedures in 43 CFR part 2.

2. *Mandatory Component 2:* Energy and Mineral Development Proposal

A tribe may present their energy and mineral development proposal in any form they wish, so long as the proposal contains a description of planned activities and deliverable products that can be accomplished within the fiscal year for which funding is being requested. The proposal should be well organized, contain as much detail as possible, yet be presented succinctly to allow a quick and thorough understanding of the proposal by the DEMD ranking team.

Many tribes utilize the services of a staff geoscientist or private consultant to prepare the technical part of the proposal. However, some tribes may not have these resources and, therefore, are urged to seek DEMD's technical assistance in preparing their EMDP proposal. Tribes who want technical assistance from DEMD should make this request in writing to the address provided in this notice. The request should be made as early as possible to give DEMD time to perform the assistance.

The proposal should include the following sections.

(a) *Overview and Technical Summary of the Project:* Prepare a short summary overview of the proposal that includes the following:

—Elements of the proposed study;
—Reasons why the proposed study is needed;
—Total requested funding;
—Responsible parties for technical execution and administration of the proposed project; and
—A tribal point of contact for the project and contact information.

(b) *Technical Summary of Project:* Describe in relevant detail the technical description of the project area, if sufficient information exists. Give examples of a typical resource occurrence to be examined under the proposal, such as the oil or gas deposit, etc. If possible, include criteria applicable to these types of resource occurrences.

- *Multi-Phased Studies:* Explain whether this assessment request will begin a new study or continue a study, which has already been partially completed. Also explain how long the study will last. [Note: DEMD cannot guarantee funding for a project from one fiscal year to the next.]
- *Known Energy/Mineral Resource:* If a known energy and/or mineral deposit exists or produces near the reservation, discuss the possible extension or trend of the deposit onto the reservation.
- *Existing Information:* Acknowledge any existing mineral exploration information and provide references. The proposed new study should not duplicate previous work.
- *Environmental or Cultural Sensitive Areas:* Describe and verify if the resources are located in an archeological, environmentally or culturally sensitive area of the reservation. The tribe must also assist DEMD with the review under the National Environmental Policy Act, 42 U.S.C. 4321 *et seq.*, for the proposed project.

(c) *Project Objective, Goals and Scope of Work:* Describe why the tribe needs the proposed energy and mineral development. Examples may include:

- Discussion of the short and long term benefits to the tribe;
- Initial identification of an energy or mineral resource for possible development;
- Additional information regarding the potential resource required for tribal decision making commitments on development proposals;
- Feasibility studies and market analyses on resource development potentials;
- Support for environmental studies;
- Support and technical assistance as part of the contract negotiations process;
- Description of the work proposed, and the project goals and objectives expected to be achieved by the proposed project;
- Description of the location on the reservation where the work will be done (include relevant page size maps and graphs); and
- Description, in relevant detail, of the scope of work and justification of a particular method. For example, if a geochemical sampling survey is planned, an explanation might include the quantity samples to be obtained, what type of sampling will be targeted, the soil horizons to be tested, general location of the projected sampling, how the samples are to be analyzed and why geochemistry was chosen as an exploration technique. Furnish similar types of explanations and details for geophysics, geologic mapping, core drilling or any other type of assessment planned.

(d) *Deliverable Products:* Describe all deliverable products that the proposed assessment project will generate, including all technical data to be obtained during the study. Describe the types of maps to be generated and the proposed scales. Also, discuss how these maps and cross-sections will help define the energy and mineral potential on the reservation. Discuss any planned status reports as well as the parameters of the final report.

(e) *Resumes of Key Personnel:* If using consultant services, provide the resumes of key personnel who will be performing the project work. The resumes should provide information on each individual's expertise. If subcontractors are used, these should also be disclosed.

3. *Mandatory Component 3:* Detailed Budget Estimate

A detailed budget estimate is required for the funding level requested. The detail not only provides the tribe with an estimate of costs, but it also provides DEMD with the means of evaluating the cost-benefit of each project. This line-by-line budget must fully detail all projected and anticipated expenditures under the EMDP proposal. The ranking committee reviews each budget estimate to determine whether the budget is reasonable and can produce the results outlined under the proposal.

Each proposed project function should have a separate budget. The budget should break out contract and consulting fees, fieldwork, lab and

testing fees, travel and all other relevant project expenses. Preparation of the budget portion of an EMDP proposal should be considered a top priority. EMDP proposals that include sound budget projections will receive a more favorable ranking over those proposals that fail to provide appropriate budget projections.

The budget page(s) should provide a comprehensive breakdown for those project line items that involve several components, or contain numerous sub-functions.

(a) *Contracted Personnel Costs.* This includes all contracted personnel and consultants, their respective positions and time (man-hour) allocations for the proposed functions of a project.

• Personnel funded under the Public Law 93–638 EMDP must have documented professional qualifications necessary to perform the work. Position descriptions or resumes should be attached to the budget estimate.

• If a consultant is to be hired for a fixed fee, the consultant's expenses should be itemized as part of the project budget.

• Consultant fees must be accompanied by documentation that clearly identifies the qualifications of the proposed consultants, specifics as to how the consultant(s) are to be used, and provides a line item breakdown of costs associated with each consultant activity.

(b) *Travel Estimates.* Estimates should be itemized by airfare and vehicle rental, lodging and per diem, based on the current federal government per diem schedule.

(c) *Data Collection and Analysis Costs.* These costs should be itemized in sufficient detail for the reviewer to evaluate the charges. For example, break down drilling and sampling costs in relation to mobilization costs, footage rates, testing and lab analysis costs per core sample.

(d) *Other Expenses.* Include computer rental, report generation, drafting, and advertising costs for a proposed project.

D. Submission of Application in Digital Format

Submit the application, including the budget pages, in digital form. Proposals that are submitted without the digital components will be returned.

Acceptable formats are Microsoft (MS) Word, MS Excel or Adobe PDF on compact disks (CDs) or floppy disks. The budget must be submitted in an Excel spreadsheet.

Each file must be saved with a filename that clearly identifies the file being submitted. File name extensions must clearly indicate the software application used for preparation of the documents (*i.e.* , doc, pdf, xls).

Documents that require an original signature, such as cover letters, tribal resolutions, and other letters of tribal authorization can be submitted in hard copy (paper) form.

If you have any additional questions concerning the Energy and Mineral Development proposal submission process, please contact Robert Anderson, DEMD's EMDP Coordinator at (720) 407–0602.

E. Application Evaluation and Administrative Information

1. Administrative Review

Upon receipt of an application, DEMD will determine whether the document contains the required prescribed information, includes a tribal resolution, contains sufficient technical/scientific information to conduct an evaluation, and does not duplicate or overlap previous or current funded EMDP projects.

The DEMD staff may return an application which does not include all information and documentation required within this notice. During the review of a proposal, DEMD may request the submission of additional information.

2. Ranking Criteria

Proposals will be formally evaluated by a Review and Ranking Panel using the six criteria listed below. Each criteria factor provides a percentage of the total rating of 100 points maximum.

(a) Resource Potential; 10 points. If the resource does not exist, then the project will be rejected. The panel will base their scoring on both the information provided by the tribe and databases maintained by DEMD. It is critical that the tribe attempt to provide all pertinent information in their proposal in order to ensure that an accurate review of the proposal is accomplished. The reviewers are aware that many tribes have little energy or mineral resource data on reservation lands, and in some cases, resource data does not exist. However, geologic and historical mineral development data exist throughout most of the continental U.S. on lands surrounding Indian reservations.

Many times a producing energy or mineral deposit exists outside but near the reservation boundary. The geologic setting containing the resource may extend onto the reservation, regardless of the size of the reservation. This would suggest potential of finding similar resources on the reservation. In some cases, available data on adjacent lands may allow for a scientifically acceptable projection of favorable trends for energy or mineral occurrences on those Indian lands in question.

For renewable energy proposals, this factor would apply to conditions favorable for the economic development of the particular renewable energy source being studied.

(b) Marketability of the Resource; 20 points. Reviewers will base their scoring on both the short and long-term market conditions of the resources. Reviewers are aware that the marketability of an energy or mineral commodity is time-dependent on existing and emerging market conditions. Industrial minerals such as aggregates, sand/gravel and gypsum are dependent on local/regional economic conditions. Precious and base metal minerals such as gold, silver, lead, copper and zinc are usually more dependent on international market conditions. Natural gas and coal bed methane production is economically dependent on having relatively close access to a transmission pipeline, as is renewable energy to an electric transmission grid. Coal and crude oil production, on the other hand, carry built-in transportation costs, making those resources more dependent on current and projected energy commodity rates. At any time, some commodities may have a strong sustained market while others experience a weak market environment, or even a market surge that may be only temporary.

Reviewers are aware of pitfalls surrounding long term market forecasts of energy and mineral resources, so the proposal should address this element fully. Also, short-term forecasts may indicate an oversupply from both national and internationally developed properties, and therefore additional production may not be accommodated. Certain commodities such as electricity may be in high demand in some regional sectors, but the current state of the transmission infrastructure does not allow for additional kilowatts to be handled, thereby hindering a market opportunity.

On the other hand, the potential for improving markets may be suggested by market indicators. Examples of market indicators include price history, prices from the futures markets, rig count for oil and gas, and fundamental factors like supply shortages, political unrest in foreign markets, and changes in technology.

(c) Economic Benefits Produced by the Project; 20 points. This proposed study should make the tribe's land more attractive to industry for exploration and development or provide for the

tribe's own economic development. Whatever the commodity being studied, the ultimate goal is to collect useful data and information that generates interest within the development industry, attract potential developers to the Indian lands, and acquire data and information at a minimal cost to the tribe.

(d) Tribes' Willingness to Develop; 20 points. The tribe's willingness to consider developing any potential resource must be clearly stated in the proposal and the tribal resolution. Note that this is *not* a statement for mandatory development of any potential resource, but just that the tribe is willing to develop. The decision as to whether or not to develop will always lie with the tribe. The willingness to development statement should provide sufficient explanation of how the tribe intends to accomplish this task. The willingness to develop will also be evaluated by the tribe's willingness to release energy or mineral data to potential developers.

(e) Tribal Commitment to the Project; 25 points.

- The tribe should appoint a designated lead and contact person (*e.g.*, someone with direct contact to the council) to be committed to the successful completion of the project.
- If the tribe has a strategic plan for development, does the EMDP proposal fit within that strategic plan? A strategic plan outlines objectives, goals, and methodology for sustainable tribal economic development.
- The tribe's business environment must be conducive to development.

(f) Additional Funding or Participation From Other Entities; 5 points.

Additional point consideration will be given if other government agencies (Bureau of Land Management, DOE, etc.) and/or private companies are involved and contribute to the project.

3. Ranking of Proposals and Award Letters

The EMDP review committee will rank the energy and mineral development proposals using the selection criteria outlined in this manual under Section 6. The DEMD will then forward the rated requests to the Director of the IEED (Director) for approval. Once approved, the Director will submit all proposals to the Assistant Secretary—Indian Affairs for concurrence and announcement of awards to those selected tribes, via written notice. Those tribes not receiving an award will also be notified immediately in writing.

F. When to Submit

The DEMD will accept applications at any time before the deadline stated in the **DATES** section of this notice, and will send a notification of receipt to the return address on the application package, along with a determination of whether or not the application is complete. The DEMD will not consider grant proposals after this date. A date-stamped receipt of submission by the BIA Regional or Agency-level office on or before the announced deadline will also be acceptable.

G. Where To Submit

Applicants must submit the Energy and Mineral Development proposals to DEMD at the address listed in the **ADDRESSES** section of this notice. Applicants should also, as a matter of courtesy, forward a copy of their proposal to their own BIA Agency and Regional offices.

A tribe may fax the cover letter and resolution for the proposal prior to the deadline, which will guarantee that the proposal will be considered as being received on time. However, DEMD asks that tribes or consultants do not send the entire proposal via the fax method, as this severely overloads the fax system due to the relatively large number of proposals that DEMD receives each year.

The cover letter should also state that the proposal is being sent via FedEx or mail. An original signature copy must be received in DEMD's office within ten (10) working days after the deadline, including all signed tribal resolutions and/or letters of tribal authorization.

BIA Regional or Agency level offices receiving a tribe's submitted EMDP proposal do not have to forward it on to DEMD. It is meant to inform them of a tribe's intent to perform energy or mineral studies using EMDP funding. The BIA Regional or Agency offices are free to comment on the tribe's proposal, or to ask DEMD for other information.

H. Transfer of Funds

IEED will transfer a tribe's EMDP award funds to the BIA Regional Office that serves that tribe, via a sub-allotment funding document coded for the tribe's EMDP project. The tribe should be anticipating the transfer of funds and be in contact with their budget personnel contacts at the Regional and Agency office levels. Tribes receiving EMDP awards must establish a new 638 contract to complete the transfer process, or use an existing 638 contract, as applicable.

I. Reporting Requirements for Award Recipients

1. Quarterly Reporting Requirements

During the life of the EMDP project, quarterly written reports are to be submitted to the DEMD project monitor for the project. The beginning and ending quarter periods are to be based on the actual start date of the EMDP project. This date can be determined between DEMD's project monitor and the tribe.

The quarterly report can be a one to two page summary of events, accomplishments, problems and/or results that took place during the quarter. Quarterly reports are due two weeks after the end of a project's fiscal quarter.

2. Final Reporting Requirements

- *Delivery Schedules.* The tribe must deliver all products and data generated by the proposed assessment project to DEMD's office within two weeks after completion of the project.
- *Mandatory Requirement to Provide Reports and Data in Digital Form.* The DEMD maintains a repository for all energy and mineral data on Indian lands, much of it derived from these energy and mineral development reports. As EMDP projects produce reports with large amounts of raw and processed data, analyses and assays, DEMD requires that deliverable products be provided in digital format, along with printed hard copies.

Reports can be provided in either MS Word or Adobe PDF format. WordPerfect format will be accepted but is not preferred. Spreadsheet data can be provided in MS Excel, MS Access, or Adobe PDF formats. All vector figures should be converted to PDF format, as that has become a common format for such files. Faster images can be provided in PDF, JPEG, TIFF, or any of the Windows metafile formats.

- *Number of Copies.* When a tribe prepares a contract for energy and mineral development, they must describe the deliverable products and include a requirement that the products be prepared in standard format (see format description above). Each energy and mineral development contract will provide funding for a total of six (6) printed and six (6) digital copies to be distributed as follows:

(a) The tribe will receive two printed and two digital copies of the EMDP report.

(b) The DEMD requires four printed copies and four digital copies of the EMDP report. DEMD will transmit one of these copies to the tribe's BIA Regional Office, and one copy to the

tribe's BIA Agency office. Two printed and two digital copies will then reside with DEMD. These copies should be forwarded to the DEMD offices in Lakewood, Colorado, to the attention of the Energy and Mineral Development Program.

All products generated by EMDP studies may be subject to release under FOIA, as noted above. Products include all reports and technical data obtained during the study such as geophysical data, geochemical analyses, core data, lithologic logs, assay data of samples tested, results of special tests, maps and cross sections, status reports and the final report.

J. Requests for Technical Assistance

The DEMD staff may provide technical consultation (*i.e.*, work directly with tribal staff on a proposed project), provide support documentation and data, provide written language on specialized sections of the proposal and suggest ways a tribe may obtain other assistance, such as from a company or consultant specializing in a particular area of expertise. However, the tribe is responsible for preparing the executive summary, justification and scope of work for their proposal.

The tribe must notify DEMD in writing that they require assistance, and DEMD will then appoint staff to provide the requested assistance. The tribe's request must clearly specify the type of technical assistance desired.

Requests for technical assistance should be submitted by the deadline stated in the **DATES** section for such requests to allow DEMD time to provide the appropriate assistance. Tribes not seeking technical assistance should attempt to submit their EMDP proposals well in advance of the deadline to allow DEMD time to review the proposals for possible deficiencies and allow ample time to contact the tribe with requests for revisions to the initial submission.

Dated: March 10, 2009.

George T. Skibine,

Deputy Assistant Secretary for Policy and Economic Development.

[FR Doc. E9–6545 Filed 3–24–09; 8:45 am]

BILLING CODE 4310–4M–P

DEPARTMENT OF THE INTERIOR

Bureau of Indian Affairs

Indian Gaming

AGENCY: Bureau of Indian Affairs, Interior.

ACTION: Notice of Approved Tribal-State Class III Gaming Amendments.

SUMMARY: This notice publishes approval of amendments to 13 Class III Tribal-State Gaming Compacts (Amendments). The 13 Class III Gaming Compacts are between the State of Arizona and each of the following Indian tribes, respectively: Ak-Chin Indian Community, Colorado River Indian Tribes, Cocopah Indian Tribe, Fort McDowell Yavapai Nation, Fort Mojave Indian Tribe, Havasupai Indian Tribe, Hualapai Indian Tribe, Kaibab-Paiute Indian Tribe, Navajo Nation, Tohono O'odham Nation, White Mountain Apache Tribe, Yavapai-Apache Tribe, and Zuni Tribe.

DATES: *Effective Date:* March 25, 2009.

FOR FURTHER INFORMATION CONTACT: Paula L. Hart, Acting Director, Office of Indian Gaming, Office of the Deputy Assistant Secretary—Policy and Economic Development, Washington, DC 20240. *Telephone:* (202) 219–4066.

SUPPLEMENTARY INFORMATION: Under section 11 of the Indian Gaming Regulatory Act of 1988 (IGRA), Public Law 100–497, 25 U.S.C. 2710, the Secretary of the Interior shall publish in the **Federal Register** notice of approved Tribal-State compacts for the purpose of engaging in Class III gaming activities on Indian lands. The approved Amendments are substantially identical. Generally, the Amendments consist of clarifications and minor changes to various sections of each tribe's current compact (which are also substantially identical). The Amendments change the destination and frequency of the tribes' payments from quarterly to yearly, based upon the individual gaming facility's fiscal year.

Dated: March 6, 2009.

George T. Skibine,

Deputy Assistant Secretary for Policy and Economic Development.

[FR Doc. E9–6585 Filed 3–24–09; 8:45 am]

BILLING CODE 4310–4N–P

DEPARTMENT OF THE INTERIOR

Bureau of Land Management

[LLWO35000.L14300000.ER0000.24–1A; OMB Control Number 1004–0153]

Information Collection; Conveyance of Federally-owned Mineral Interests

AGENCY: Bureau of Land Management, Interior.

ACTION: 30-Day Notice and Request for Comments.

SUMMARY: The Bureau of Land Management (BLM) has submitted an information collection request to the Office of Management and Budget (OMB) for a 3-year extension of OMB Control Number 1004–0153 under the Paperwork Reduction Act. The Bureau of Land Management (BLM) needs to collect the information in order to determine if surface-estate owners are eligible to receive title to the Federally-owned minerals lying beneath their land.

DATES: The OMB is required to respond to this information collection request within 60 days but may respond after 30 days. Therefore, written comments should be received on or before April 24, 2009.

ADDRESSES: You may submit comments directly to the Desk Officer for the Department of the Interior (OMB # 1004–0153), Office of Management and Budget, Office of Information and Regulatory Affairs, by fax 202–395–7245, or by electronic mail at *oira_docket@omb.eop.gov*.

In addition, please mail or hand-carry a copy of your comments to BLM Information Collection Clearance Officer (WO–630), Department of the Interior, 1849 C Street, NW., Mail Stop 401 LSWashington, DC 20240; or send a copy of your comments by electronic mail to *jean_sonneman@blm.gov*, ''Attn: 1004–0153''.

FOR FURTHER INFORMATION CONTACT: Alzata Ransom, Division of Lands, Realty and Cadastral Survey, at 202–452–7772 (Commercial or FTS).

SUPPLEMENTARY INFORMATION:

60-Day Notice: On September 23, 2008, the BLM published a 60-day notice (73 FR 54849) requesting comments on the proposed information collection. The comment period ended November 24, 2008. No comments were received.

Title: Conveyance of Federally-owned Mineral Interests (43 CFR Part 2720).

OMB Number: 1004–0153.

Form Numbers: Nonform information.

Abstract: The information that is supplied allows the BLM to determine if private surface estate owners are eligible to receive title to the Federally-owned minerals lying beneath their land.

Current Action: This proposal is being submitted to extend the expiration date of March 31, 2009.

Type of Review: 3-year extension.

Affected Public: Surface-estate owners who apply for title to Federally-owned minerals lying beneath their land.

Obligation to Respond: Required to obtain or retain benefits.

Application Fee per Response: $50.

Estimated Number of Annual Responses: 21.

Estimated Time per Response: 10 hours.

Estimated Total Annual Burden Hours: 210 hours.

The BLM requests comments on the following subjects: (1) Whether the collection of information is necessary for the proper functioning of the BLM, including whether the information will have practical utility; (2) The accuracy of the BLM's estimate of the burden of the information collection, including the validity of the methodology and assumptions used; (3) The quality, utility, and clarity of the information collected; and (4) How to minimize the information collection burden on those who are to respond, including the use of appropriate automated, electronic, mechanical, or other forms of information technology.

Before including your address, phone number, e-mail address, or other personal identifying information in your comment, you should be aware that your entire comment—including your personal identifying information—may be made publicly available at any time. While you can ask us in your comment to withhold your personal identifying information from public review, we cannot guarantee that we will be able to do so.

Dated: March 20, 2009.

Jean Sonneman,

Bureau of Land Management, Acting Information Collection Clearance Officer.

[FR Doc. E9–6632 Filed 3–24–09; 8:45 am]

BILLING CODE 4310–84–P

DEPARTMENT OF THE INTERIOR

Bureau of Land Management

[LLIDT03000–L14300000.EU0000; IDI–36320]

Notice of Realty Action—Proposed Disposal of Public Land; and Notice of Intent To Prepare a Management Framework Plan Amendment and Associated Environmental Impact Statement for the Shoshone Field Office, Idaho

AGENCY: Bureau of Land Management, Interior.

ACTION: Notice of Realty Action and Notice of Intent.

SUMMARY: A parcel of public land totaling 2480 acres in Blaine County, Idaho, is being considered for disposal out of Federal ownership, either through sale at no less than the appraised fair market value or through a land exchange proposal, to include the State of Idaho, under the provisions of the Federal Land Policy and Management Act of 1976 (FLPMA). Disposal of this parcel out of Federal ownership would require amendment of the 1980 Bennett Hills/Timmerman Hills Management Framework Plan (MFP) prior to the disposal action.

DATES: The scoping period will commence on March 25, 2009. In order to ensure consideration in the environmental analysis of the proposed disposal, comments must be received by May 11, 2009.

ADDRESSES: Since the FAA is the lead agency for the EIS process, comments regarding the notice of realty action and proposed plan amendment should be addressed to Ms. Cayla Morgan, Federal Aviation Administration, Seattle Airports District Office, 1601 Lind Avenue, SW., Suite 250, Renton, Washington 98057–3356 with a copy sent to Ms. Lori A. Armstrong, Field Manager, Bureau of Land Management, 400 West F Street, Shoshone, Idaho 83352.

FOR FUTHER INFORMATION CONTACT: For information regarding the potential disposal action please contact Ms. Tara Hagen, Realty Specialist, Bureau of Land Management, 400 West F Street, Shoshone, Idaho 83352. For information regarding the environmental analysis and replacement airport project please contact Ms. Cayla Morgan, Federal Aviation Administration, at the above address or telephone (425) 227–2653.

SUPPLEMENTARY INFORMATION: In accordance with the FLPMA (43 U.S.C. 1701), as amended; the National Environmental Policy Act of 1969 (NEPA) (42 U.S.C. 4321), as amended; and the Council on Environmental Quality (CEQ) regulations (40 CFR parts 1500–1508); the Department of the Interior, Bureau of Land Management (BLM), in cooperation with the Federal Aviation Administration (FAA) intends to prepare a MFP amendment and associated environmental impact statement (EIS), to consider the location and construction of a replacement airport for the Friedman Memorial Airport (SUN) and potential disposal of public land in Blaine County, Idaho. The FAA has been identified as the lead agency with the BLM as a cooperating agency; one of the alternative sites occurs wholly on public land administered by the BLM. The EIS will analyze the potential environmental impacts of the construction and operation of an airport facility, associated utility and access rights-of-way, protection of easement interests, as well as the consideration of the potential disposal of a parcel of public land totaling 2480 acres either by sale or land exchange. This notice initiates the public scoping process regarding the notice of realty action and the proposed MFP amendment.

The sponsor of the project, Friedman Memorial Airport Authority (Airport Authority), has requested funding and approval from the FAA to construct and operate a replacement airport for the Friedman Memorial Airport in Blaine County, Idaho. The FAA published a Notice of Intent to Prepare an EIS for a Replacement Airport near Hailey, Idaho, in the **Federal Register** on November 1, 2007 (Vol. 72, No. 211, page 61945) in response to the Airport Authority's application. As a result of initial studies by the FAA the Airport Authority has now submitted a proposal to the BLM to acquire approximately 2480 acres of public land by either sale or inclusion of the public land within a land exchange, which would include the State of Idaho as a party, if the alternative site located wholly of public land in conjunction with the aforementioned project is determined by the EIS to be the preferred location for the replacement airport.

The following described public land in Blaine County, Idaho, is being considered for disposal out of Federal ownership in conjunction with the FAA's replacement airport project under the authority of the Federal Land Policy and Management Act of 1976 (90 Stat. 2750, 43 U.S.C. 1713):

Boise Meridian

T. 2 S., R. 18 E.,
Sec. 25: Entire Section;
Sec. 26: Entire Section;
Sec. 27: Entire Section;
Sec. 34: N2N2; and
Sec. 35: N2NW, E2.

The area described contains 2480 acres in Blaine County.

Pursuant to the MFP (as amended), sites associated with disposal of public land for airport facilities not currently identified for disposal out of Federal ownership in the MFP will be considered through the MFP amendment process.

Subject to limitations prescribed by law and regulation, prior to patent issuance, a Holder of any right-of-way within the public land may be given the opportunity to amend the right-of-way for conversion to a new term, including perpetuity, if applicable, or to an easement. Conveyance of any mineral interests pursuant to either Section 206 or Section 209 of the FLPMA will be analyzed during processing of the proposed disposal action.

On March 25, 2009, the above-described land will be segregated from appropriation under the public land laws, including the mining laws, except the sale and exchange provisions of the

FLPMA. Until completion of the disposal action, the BLM is no longer accepting land use applications affecting the identified public land, except applications for the amendment of previously filed right-of-way applications or existing authorizations to increase the term of the grants in accordance with 43 CFR 2807.15 and 2886.15. The segregative effect will terminate upon issuance of a patent, publication in the **Federal Register** of a termination of the segregation, or on March 25, 2011 unless extended by the BLM State Director in accordance with 43 CFR 2711.1–2(d) prior to the termination date.

Public Comments: During the initial stages of project development the FAA and the Airport Authority conducted several public meetings. The results of those meetings will be incorporated into the BLM MFP amendment process and additional public involvement will occur through the submission of written comments. While additional public meetings are not identified at this point, if additional meetings are scheduled, a notice in the local newspapers will announce the date and time at least 15 days prior to any public meeting. For a period extending until May 11, 2009, interested parties and the general public may submit in writing any comments concerning the BLM's MFP amendment or the public land being considered for disposal including notification of any encumbrances or other claims relating to the identified land. Please submit comments to Ms. Morgan, with a copy sent to Ms. Armstrong at the addresses listed above. In order to ensure consideration in the environmental analysis of the proposed project, comments must be in writing and postmarked or delivered no later than May 11, 2009. Comments transmitted via e-mail will not be accepted. Comments, including names and street addresses of respondents, will be available for public review at the BLM Shoshone Field Office during regular business hours, except holidays. Individual respondents may request confidentiality. Before including your address, phone number, e-mail address, or other personal identifying information in your comment, you should be aware that your entire comment, including your personal identifying information, may be made publicly available at any time. While you can ask us in your comment to withhold your personal identifying information from public review, we cannot guarantee that we will be able to do so. If you wish to have your name or address withheld from public disclosure under the Freedom of Information Act, you must state this prominently at the beginning of your comments. Any determination by the FAA or the BLM to release or withhold the names and/or addresses of those who comment will be made on a case-by-case basis. Such requests will be honored to the extent allowed by law. The FAA and the BLM will make available for public review, in their entirety, all comments submitted by businesses or organizations, including comments by individuals in their capacity as an official or representative of a business or organization.

Authority: 43 CFR 2711.1–2; 43 CFR 1610.5–2)

Further information about the EIS will be posted when available at the following Web site: *http://www.airportsites.net/SUN-EIS.*

Lori A. Armstrong,

Shoshone Field Manager.

[FR Doc. E9–6583 Filed 3–24–09; 8:45 am]

BILLING CODE

DEPARTMENT OF THE INTERIOR

Bureau of Land Management

[LLCOS02000; L10200000.EE0000]

Notice of Intent To Amend the San Juan/San Miguel Resource Management Plan and Prepare the Beaver Meadows-Sauls Creek Travel Management Plan

AGENCY: Bureau of Land Management, Interior.

ACTION: Notice of Intent

SUMMARY: The Bureau of Land Management (BLM) intends to amend the San Juan/San Miguel Resource Management Plan (RMP) to limit Off-Highway Vehicle (OHV) use to designated roads and motorized trails on lands within the Beaver Meadows-Sauls Creek Travel Management Landscape. The Landscape project analysis area encompasses approximately 797 acres of BLM lands and approximately 54,397 acres of Forest Service lands on the Columbine Field Office/Ranger District in the vicinity of Bayfield, Colorado. Both agencies will conduct a joint Environmental Assessment (EA) which will also determine designated motorized routes within the landscape in addition to the San Juan/San Miguel RMP amendment.

DATES: Initial scoping has been conducted as described below in **SUPPLEMENTARY INFORMATION**. Additional scoping comments will be accepted through April 24, 2009 if they relate to the scope of issues regarding the proposal to amend the San Juan/San Miguel RMP for the 797-acre BLM parcel, and if the issues have not already been identified below. An additional 30-day public comment period will be announced with the release of a Pre-Decisional EA, and will be advertised in the local media and San Juan Public Lands Center Web site at *http://www.fs.fed.us/r2/sanjuan/projects/projects.shtml.* This is anticipated to occur in the spring of 2009.

ADDRESSES: Comments regarding the proposal to amend the San Juan/San Miguel RMP for the BLM parcel should be sent to Nancy Berry, Recreation Forester, Columbine Field Office, P.O. Box 439, Bayfield, CO 81122 or *nberry@fs.fed.us.*

FOR FURTHER INFORMATION CONTACT: Nancy Berry at the above address or e-mail, telephone number 970–375–3304.

SUPPLEMENTARY INFORMATION: The BLM recognizes the use of motorized and non-motorized vehicles as acceptable uses of the public lands. In response to Presidential Executive Orders 11644 and 11989, and in accordance with the BLM National Strategy for OHV Use on Public Lands, and 43 CFR 8342, this EA proposes to amend the San Juan/San Miguel RMP to limit motorized use to designated routes and will designate routes within the landscape. This EA analysis is being conducted jointly by the BLM and the Forest Service under authority as a Service First office.

This notice is required under BLM regulations for the proposed amendment of the San Juan/San Miguel RMP which would change the travel management designation for 797 acres of BLM land from ''open'' to ''limited.'' This notice is not required for the project-level route designations on either BLM or Forest Service lands. For this reason, this notice is seeking scoping comments only as they relate to the proposal to amend the San Juan/San Miguel RMP.

Initial scoping was conducted through direct mailings, public meetings, public field trips, and newspaper announcements during the fall of 2008. Scoping replies resulted in the identification of a scope of issues to be analyzed in the EA. These issues are:

1. Impacts to Resources, including erosion, noxious weeds, wildlife, air quality, roadless areas;

2. Impacts to social niches, including noise, safety, providing for motorized and non-motorized opportunities, and requests for certain specific routes;

3. Impacts to adjacent residents, including Forest Lakes, Deer Valley, and Pine Springs Ranch subdivisions.

Other issues are not to be included in the analysis because they were determined to be outside the scope of the proposed action; already decided by law, regulation, plan, or higher level decision; irrelevant to the decision to be made; opinion, conjectural, or not supported by factual evidence; or purely supportive of the proposed action.

These issues led to the development of four alternatives that will be analyzed in the EA: Alternative 1—No Action—existing travel management designation would remain in place; Alternative 2—cross-country motorized travel would no longer be allowed and all motorized travel would be restricted to existing open system roads and trails; Alternative 3—would provide motorized opportunities on designated roads and trails utilizing some closed roads and some user created routes, in addition to the existing open roads and trails in Alternative 2, while protecting the resources from impacts; Alternative 4—would be similar to Alternative 3, with additional miles of designated motorized trails. These alternatives will be described in detail when the Pre-Decisional EA is released.

Dated: March 20, 2009.

Matthew Janowiak,

Acting Field Office Manager.

[FR Doc. E9–6636 Filed 3–24–09; 8:45 am]

BILLING CODE 4310–JB–P

DEPARTMENT OF THE INTERIOR

Bureau of Land Management

[OR–63495; LLORC00000: L14300000 EU0000; HAG–09–0074]

Notice of Realty Action: Receipt of Application for the Conveyance of Federally-Owned Mineral Interests; Oregon

AGENCY: Bureau of Land Management, Interior.

ACTION: Notice of realty action.

SUMMARY: This action informs the public of the receipt of an application from the surface estate owner for the acquisition of the Federally-owned mineral estate.

FOR FURTHER INFORMATION CONTACT: Paul Rodriguez, Realty Specialist, Coos Bay District, 1300 Airport Lane, North Bend, Oregon 97459, at (541) 751–4462.

SUPPLEMENTARY INFORMATION: Notice is hereby given pursuant to Section 209 of the Act of October 21, 1976 (90 Stat. 2757), William H. Hitner Jr. and Pamela J. Hitner has filed an application to purchase the Federally-owned mineral estate in the land described below:

Willamette Meridian

T. 28 S., R. 12 W.,
Sec. 29, NW¼NE¼.

The area described contains 36.01 acres, more or less, in Coos County, Oregon.

On March 25, 2009, the mineral interest described above will be segregated to the extent that it will not be open to appropriation under the public land laws including the mining laws. The segregative effect of the application shall terminate either upon issuance of a patent or other document of conveyance of such mineral interests, or upon rejection of the application, or two years from the date of filing of the application, February 9, 2006, whichever comes first. Due to a delay in processing the application as a result of mutual interest in coalbed methane exploration, the two year segregative effect will begin on March 25, 2009, as agreed to by the applicant and the Bureau of Land Management.

(Authority: 43 CFR 2720.1–1(2)(b))

Dated: March 19, 2009.

Roberta B. Estes,

Acting District Manager.

[FR Doc. E9–6571 Filed 3–24–09; 8:45 am]

BILLING CODE 4310–33–P

DEPARTMENT OF THE INTERIOR

Bureau of Land Management

[NM 115588 LLNMF01000 L14300000.ES0000]

Recreation and Public Purpose (R&PP) Classification; San Juan County, NM

AGENCY: Bureau of Land Management, Interior.

ACTION: Notice of realty action.

SUMMARY: The following described public land is determined suitable for classification for leasing and patenting to the San Juan County, Aztec, New Mexico, under the provisions of the R&PP Act, as amended (44 Stat. 741, as amended; 43 U.S.C. 869 *et seq.*). San Juan County proposes to use the land for a regional fire station.

New Mexico Principal Meridian

T. 29 N., R. 12 W.,
Sec. 2: N½ NW¼SW¼2;

Containing 20 acres, more or less.

DATES: On or before 45 days from publication date, interested parties may submit comments regarding the proposed leasing and conveyance, or classification of the lands to the Bureau of Land Management at the following address. Any adverse comments will be reviewed by the Bureau of Land Management (BLM), Farmington Field Manager, 1235 La Plata Highway, Suite A, Farmington, NM 87401, who may sustain, vacate, or modify this realty action. In the absence of any adverse comments, this realty action becomes the final determination of the Department of the Interior and is effective 60 days from publication date.

FOR FURTHER INFORMATION CONTACT: Albert Gonzales, Realty Specialist, Bureau of Land Management, Farmington Field Office, 1235 La Plata Highway, Suite A, Farmington, NM 87401, at 505–599–6334.

SUPPLEMENTARY INFORMATION: Publication of this notice segregates the public land described above from all other forms of appropriation under the public land laws, including the general mining laws, except for leasing and conveyance under the R&PP Act and leasing under the mineral leasing laws for a period of 2 years from date of this publication in the **Federal Register**. The segregation affect will terminate upon issuance of the lease and patent to San Juan County, or 2 years from the date of this publication, whichever occurs first.

The lease, when issued, will be subject to the following terms:

1. Provisions of the R&PP Act and to all applicable regulations of the Secretary of the Interior.

2. Provisions of the Resource Conservation and Recovery Act of 197 as amended, 42 U.S.C. 6901–6987 and the Comprehensive Environmental Response, Compensation and Liability Act of 1980 as amended, 42 U.S.C. 9601 and all applicable regulations.

3. Provisions of Title VI of the Civil Rights Act of 1964.

4. Provisions that the lease be operated in compliance with the approved Development Plan.

The patent, when issued, will be subject to the following terms:

1. Reservation to the United States of a right-of-way for ditches and canals in accordance with 43 U.S.C. 945.

2. Reservation to the United States of all minerals.

3. All valid existing rights, *e.g.*, rights-of-way and leases of record.

4. Provisions that if the patentee or its successor attempts to transfer title to or control over the land to another or the land is devoted to a use other than that for which the land was conveyed, without the consent of the Secretary of the Interior or his delegate, or prohibits or restricts, directly or indirectly, or permits it agents, employees, contractors, or subcontractors, including without limitation, lessees, sublessees and permittees), to prohibit or restrict,

directly or indirectly, the use of any part of the patented lands or any of the facilities whereon by any person because of such person's race, creed, color, or national origin, title shall revert to the United States.

The lands are not needed for Federal purposes. Leasing and later patenting is consistent with current Bureau of Land Management policies and land use planning. The estimated intended time of lease issuance is May 15, 2009, with the patent being issued upon substantial development taking place. The proposal serves the public interest since it would provide a regional fire station.

(Authority: 43 CFR 2741.5)

Joel Farrell,

Assistant Field Manager, Land and Resources, Farmington Field Office.

[FR Doc. E9–6570 Filed 3–24–09; 8:45 am]

BILLING CODE 4310–VB–P

DEPARTMENT OF THE INTERIOR

National Park Service

Notice of Intent To Repatriate a Cultural Item: Southwest Museum of the American Indian, Autry National Center of the American West, Los Angeles, CA

AGENCY: National Park Service, Interior.

ACTION: Notice.

Notice is here given in accordance with the Native American Graves Protection and Repatriation Act (NAGPRA), 25 U.S.C. 3005, of the intent to repatriate a cultural item in the possession of the Southwest Museum of the American Indian, Autry National Center of the American West, Los Angeles, CA, that meets the definition of ''sacred object'' under 25 U.S.C. 3001.

This notice is published as part of the National Park Service's administrative responsibilities under NAGPRA, 25 U.S.C. 3003 (d)(3). The determinations in this notice are the sole responsibility of the museum, institution, or Federal agency that has control of the cultural items. The National Park Service is not responsible for the determinations in this notice.

The one cultural item is a wooden Kickapoo Prayer Stick (object number 2006.85.11). There are symbolic images on the front of the stick and a sticker on the back reads ''Kickapoo Indians/from Kansas/Prayer stick.'' The museum acquired the cultural item from an anonymous donor in 2006. In an unknown year, the donor received the object from a Mr. Robert Babcock, owner of an ''Indian Curio'' shop located in Beverly Hills, CA. It is unknown how Mr. Babcock obtained the cultural item.

The Prayer Stick is used in the Kennekuk religion, which is one of the traditional religions of the Kickapoo Tribe of Indians of the Kickapoo Reservation in Kansas. The Kennekuk religion is derived from a tribal bandleader, Kennekuk, who began the religion in the early 19th century. The Kickapoo are originally from the Ohio and Southern Michigan area between Lake Erie and Lake Michigan. From the mid 1600s to the early 1800s, the Kickapoo tribe moved west to Indiana and then to Illinois. In the early 1800s, many Kickapoo bands traveled to various places within the United States and Northern Mexico. Kennekuk remained in western Illinois with his followers. In 1832, his band along with another band from Missouri signed the Treaty of Castor Hill, which created a reservation in northeastern Kansas. The Missouri band eventually left the reservation, while Kennekuk's band remained. Thus, this religion and this Prayer Stick is specific to the Kickapoo Tribe of Indians of the Kickapoo Reservation in Kansas.

The symbols on the Prayer Stick represent prayers said by religious leaders and Kennekuk followers for individuals, other members of the religion, and tribal members. This object is intricately tied to the practice of the Kennekuk religion. Additionally, the icons are also derived from Kickapoo traditional culture. During consultation, members of the Kennekuk religion have identified this Prayer Stick as authentic and needed for the continual use of the religion.

Officials of the Southwest Museum of the American Indian, Autry National Center of the American West have determined that, pursuant to 25 U.S.C. 3001 (3)(C), the one cultural item described above is a specific ceremonial object needed by traditional Native American religious leaders for the practice of traditional Native American religions by their present-day adherents. Officials of the Southwest Museum of the American Indian, Autry National Center of the American West also have determined that, pursuant to 25 U.S.C. 3001 (2), there is a relationship of shared group identity that can be reasonably traced between the sacred object and the Kickapoo Tribe of Indians of the Kickapoo Reservation in Kansas.

Representatives of any other Indian tribe that believes itself to be culturally affiliated with the sacred object should contact LaLena Lewark, NAGPRA Senior Coordinator, Southwest Museum of the American Indian, Autry National Center of the American West, 4700 Western Heritage Way, Los Angeles, CA 90027, telephone (323) 667–2000, extension 220, or Steven M. Karr, Ph.D., Ahmanson Curator of History and Culture and Interim Executive Director for the Southwest Museum of the American Indian, Autry National Center of the American West, 234 Museum Drive, Los Angeles, CA 90065, telephone (323) 221–2164, before April 24, 2009. Repatriation of the sacred object to the Kickapoo Tribe of Indians of the Kickapoo Reservation in Kansas may proceed after that date if no additional claimants come forward.

The Southwest Museum of the American Indian, Autry National Center of the American West is responsible for notifying the Kickapoo Tribe of Indians of the Kickapoo Reservation in Kansas, Kickapoo Tribe of Oklahoma, and Kickapoo Traditional Tribe of Texas that this notice has been published.

Dated: March 6, 2009

Sherry Hutt,

Manager, National NAGPRA Program.

[FR Doc. E9–6511 Filed 3–24–09; 8:45 am]

BILLING CODE 4312–50–S

DEPARTMENT OF THE INTERIOR

National Park Service

Notice of Intent To Repatriate Cultural Items: U.S. Department of Agriculture, Forest Service, Gila National Forest, Silver City, NM

AGENCY: National Park Service, Interior.

ACTION: Notice.

Notice is here given in accordance with the Native American Graves Protection and Repatriation Act (NAGPRA), 25 U.S.C. 3005, of the intent to repatriate cultural items in the possession and control of the U.S. Department of Agriculture, Forest Service, Gila National Forest, Silver City, NM, that meet the definition of ''unassociated funerary objects'' under 25 U.S.C. 3001.

This notice is published as part of the National Park Service's administrative responsibilities under NAGPRA, 25 U.S.C. 3003 (d)(3). The determinations in this notice are the sole responsibility of the museum, institution, or Federal agency that has control of the cultural items. The National Park Service is not responsible for the determinations in this notice.

Between 1972 and 1974, pottery sherds were removed from burial contexts at four archeological sites (LA 11609, LA 83194, LA 147976 and LA 148037) in Grant County, NM, during legally authorized excavations by

Southern Methodist University, Dallas, TX. The single bag of sherds was curated at Western New Mexico University, Silver City, NM, until the early 1990s when it was transferred to the Forest Supervisor's Office, Gila National Forest. The sherds are listed as having been recovered from a burial context.

LA 11609, LA 83194, LA 147976 and LA 148037 are a group of geographically and culturally related sites in the Burro Mountains of southwestern New Mexico. Based on material culture and site organization, the four sites have been identified as Mogollon villages occupied between A.D. 1000 and 1300.

In 1977, one ceramic vessel was removed from a burial context at LA 65250, Grant County, NM, as a result of illegal excavations by an unknown individual or individuals. The object was subsequently recovered by the Forest Service. The objects were curated at Western New Mexico University until the early 1990s when it was transferred to the Forest Supervisor's Office, Gila National Forest. The vessel is listed as having been recovered from a burial context.

Based on material culture and site organization, LA 65250 has been identified as a Mogollon village occupied between A.D. 1000 and 1200.

Continuities between ethnographic materials and technology indicate the affiliation of the above mentioned two Mogollon sites that are located in southwestern New Mexico with the Pueblo of Acoma, New Mexico; Hopi Tribe of Arizona; and Zuni Tribe of the Zuni Reservation, New Mexico. The oral traditions of the Pueblo of Acoma, New Mexico; Hopi Tribe of Arizona; and Zuni Tribe of the Zuni Reservation, New Mexico support the cultural affiliation of these three Indian tribes with Mogollon sites in southwestern New Mexico.

In 1973, 32 pottery sherds were removed illegally from an unknown site or sites in the area of Apache Creek, Catron County, NM, by Brad Triplehorn. Mr. Triplehorn subsequently donated the pottery sherds to the Ohio Historical Society, Columbus, OH, where they were curated until 2008 when the objects were transferred to the Forest Supervisor's Office, Gila National Forest. The sherds are listed as having been recovered from a burial context.

Based on material culture, the site(s) has been identified as Upland Mogollon and occupied between A.D. 600 and 1300.

In 1978, two ceramic vessels were removed from the WS Ranch Site (LA 3009) in Grant County, NM, during legally authorized excavations by the University of Texas at Austin. These objects were curated at Western New Mexico University until the early 1990s when they were transferred to the Forest Supervisor's Office, Gila National Forest. The vessels are listed as having been recovered from a burial context.

Based on material culture and site organization, the WS Ranch site has been identified as an Upland Mogollon masonry pueblo which was occupied between A.D. 1150 and 1300.

Continuities between ethnographic materials and technology indicate the affiliation of the two Upland Mogollon sites that are located in west-central New Mexico with the Pueblo of Acoma, New Mexico; Hopi Tribe of Arizona; and Zuni Tribe of the Zuni Reservation, New Mexico. The oral traditions of the Pueblo of Acoma, New Mexico; Hopi Tribe of Arizona; and Zuni Tribe of the Zuni Reservation, New Mexico support the cultural affiliation of these three Indian tribes with Mogollon sites in west-central New Mexico.

Officials of the U.S. Department of Agriculture, Forest Service, Gila National Forest have determined that, pursuant to 25 U.S.C. 3001 (3)(B), the 36 cultural items described above are reasonably believed to have been placed with or near individual human remains at the time of death or later as part of the death rite or ceremony and are believed, by a preponderance of the evidence, to have been removed from a specific burial site of a Native American individual. Officials of the U.S. Department of Agriculture, Forest Service, Gila National Forest also have determined that, pursuant to 25 U.S.C. 3001 (2), there is a relationship of shared group identity that can be reasonably traced between the unassociated funerary objects and the Pueblo of Acoma, New Mexico; Hopi Tribe of Arizona; and Zuni Tribe of the Zuni Reservation, New Mexico.

Representatives of any other Indian tribe that believes itself to be culturally affiliated with the unassociated funerary objects should contact Dr. Frank E. Wozniak, NAGPRA Coordinator, Southwestern Region, USDA Forest Service, 333 Broadway Blvd., SE, Albuquerque, NM 87102, telephone (505) 842–3238, before April 24, 2009. Repatriation of the unassociated funerary objects to the Pueblo of Acoma, New Mexico; Hopi Tribe of Arizona; and Zuni Tribe of the Zuni Reservation, New Mexico may proceed after that date if no additional claimants come forward.

The U.S. Department of Agriculture, Forest Service, Gila National Forest is responsible for notifying the Pueblo of Acoma, New Mexico; Hopi Tribe of Arizona; and Zuni Tribe of the Zuni Reservation, New Mexico that this notice has been published.

Dated: March 6, 2009

Sherry Hutt,

Manager, National NAGPRA Program.

[FR Doc. E9–6509 Filed 3–24–09; 8:45 am]

BILLING CODE 4312–50–S

DEPARTMENT OF THE INTERIOR

National Park Service

Notice of Intent To Repatriate Cultural Items: Texarkana Museums System, Texarkana, TX

AGENCY: National Park Service, Interior.

ACTION: Notice.

Notice is here given in accordance with the Native American Graves Protection and Repatriation Act (NAGPRA), 25 U.S.C. 3005, of the intent to repatriate cultural items in the possession of the Texarkana Museums System (formerly the Texarkana Historical Museum), Texarkana, TX, that meet the definition of ''unassociated funerary objects'' under 25 U.S.C. 3001.

This notice is published as part of the National Park Service's administrative responsibilities under NAGPRA, 25 U.S.C. 3003 (d)(3). The determinations in this notice are the sole responsibility of the museum, institution, or Federal agency that has control of the cultural items. The National Park Service is not responsible for the determinations in this notice.

From 1971 to 2008, private citizens from Miller County, AR, and Bowie County, TX, donated 209 unassociated funerary objects to the museum. There are no associated human remains in the museum collection for these funerary objects. The 209 unassociated funerary objects are 57 pieces of pottery; 2 stone tools; 1 projectile fragment; 2 stone knives; 7 clay pipes; 5 ear spools; and 135 pottery fragments.

The objects were found in Southwest Arkansas, Northeast Texas, and Southeast Oklahoma. These areas are associated with the Caddo Nation, and are in close proximity to identified and suspected Caddo burial sites. The decorative and construction techniques used in the pottery are consistent with Caddo traditional techniques and with other identified Caddo artifacts found in proximity to Caddo grave sites in the region. The unassociated funerary objects are related to the Caddo Nation who settled the Red River Valley more than 1,200 years ago. The Caddo Nation remained a strong presence in this

region well into the 18th century. Based on material culture and provenience, the unassociated funerary objects are reasonably believed to be culturally affiliated with the Caddo Nation of Oklahoma. Representatives of the Caddo Nation of Oklahoma have viewed the unassociated funerary objects and support a cultural affiliation of the Caddo Nation with these objects.

Officials of the Texarkana Museums System have determined that, pursuant to 25 U.S.C. 3001 (3)(B), the 209 cultural items described above are reasonably believed to have been placed with or near individual human remains at the time of death or later as part of the death rite or ceremony and are believed, by a preponderance of the evidence, to have been removed from a specific burial site of a Native American individual. Officials of the Texarkana Museums System also have determined that, pursuant to 25 U.S.C. 3001 (2), there is a relationship of shared group identity that can be reasonably traced between the unassociated funerary objects and the Caddo Nation of Oklahoma.

Representatives of any other Indian tribe that believes itself to be culturally affiliated with the unassociated funerary objects should contact J.A. Simmons, Texarkana Museums System, PO Box 2343, Texarkana, TX 75504, telephone (903) 793–4831, before April 24, 2009. Repatriation of the unassociated funerary objects to the Caddo Nation of Oklahoma may proceed after that date if no additional claimants come forward.

The Texarkana Museums System is responsible for notifying the Caddo Nation of Oklahoma that this notice has been published.

Dated: March 10, 2009

Sherry Hutt,

Manager, National NAGPRA Program.

[FR Doc. E9–6510 Filed 3–24–09; 8:45 am]

BILLING CODE 4312–50–S

DEPARTMENT OF THE INTERIOR

National Park Service

Notice of Inventory Completion: Department of Anthropology, University of Massachusetts, Amherst, MA

AGENCY: National Park Service, Interior.

ACTION: Notice.

Notice is here given in accordance with the Native American Graves Protection and Repatriation Act (NAGPRA), 25 U.S.C. 3003, of the completion of an inventory of human remains and associated funerary objects in the possession and control of the Department of Anthropology, University of Massachusetts, Amherst, MA. The human remains and associated funerary objects are believed to have been removed from a Maine coastal shell midden either east of the Penobscot Bay and/or possibly Bailey Island, Casco Bay, Cumberland County, ME.

This notice is published as part of the National Park Service's administrative responsibilities under NAGPRA, 25 U.S.C. 3003 (d)(3). The determinations in this notice are the sole responsibility of the museum, institution, or Federal agency that has control of the Native American human remains and associated funerary objects. The National Park Service is not responsible for the determinations in this notice.

A detailed assessment of the human remains and an inventory of the associated funerary objects were made by the Department of Anthropology, University of Massachusetts, Amherst professional staff in consultation with Amherst College, Amherst, MA, and Smith College, Northampton, MA, and with the Wabanaki Intertribal Repatriation Committee, a non-Federally recognized Indian group, representing the Aroostook Band of Micmac Indians of Maine, Houlton Band of Maliseet Indians of Maine, Passamaquoddy Tribe of Maine, and Penobscot Tribe of Maine.

At an unknown date, human remains representing a minimum of four individuals are believed to have been removed from an unknown shell midden site in Maine. Sometime in the 1970s, the human remains and associated funerary objects became part of the collection of the Department of Anthropology, University of Massachusetts, Amherst, and became known as the Bailey Collection. No known individuals were identified. The 128 associated funerary objects are 3 felsite chunks; 22 carved bone pieces; 6 beaver teeth fragments; 9 carnivore and herbivore teeth fragments; 1 bone point; 9 animal bone fragments; 1 mammal claw; 9 bone harpoon tips; 2 axes, 4 blanks; 1 possible pestle; 1 axe-like lithic; 1 cobble; 8 ground and polished stone tools; 43 bifaces; 4 projectile points; and 4 pottery sherds.

The collection records do not provide a clear provenience for these materials, though they are suggestive that the collection was excavated by people during the early 20th century. It is unknown if the name ''Bailey'' refers to a collector's name, site name, or geographic placename. Additional research does not establish an association with the archeologist John H. Bailey who worked in Vermont in the 1930s, or with the work of archeologists Alfred Bailey or L.W. Bailey. The collection may be from a site on Bailey Island in Casco Bay, ME, although there is no clear association to any known archeological excavations at this location. Documents in the collections records suggest that there might be a connection to the work of Professor Frederic Loomis of Amherst College, who conducted fieldwork at shell midden sites in Maine during the 1910s to 1930s. In 1914, Loomis donated some material collected from shell midden sites at Boothbay, Biggers Island, Winter Harbor, Sorrento, and Slave Islands to Professor Harris Hawthorne Wilder of Smith College, who was also excavating in Maine at the time. Sometime after 1966, shell midden materials from these sites were transferred from Smith College to the Department of Anthropology, University of Massachusetts, Amherst. Although the records from Amherst College and Smith College do not specifically mention the ''Bailey'' site, it is possible that the Bailey collection was part of this transfer.

In 1990, University of Massachusetts Professor Dena Dincauze, in consultation with Dr. Bruce Bourque of the University of Maine, concluded that the artifacts in the Bailey Collection are consistent with those recovered from coastal shell middens east of the Penobscot Bay, ME. During Bourque's assessment of the barbed harpoon forms, corner-notched Late Period bifaces, pebble adze and other ground stone pieces, and raw materials such as Kineo felsites and ''trap'' (possibly hornfels), he noted calcium carbonate deposits on some of the artifacts, which is typical of materials recovered from leaching shell middens. According to Dincauze, the styles of the artifacts indicate a date to the ''Ceramic Period'' of Maine, especially the last 1,500 years before European contact, though there are some artifacts (e.g., a large biface) that are similar to Middle Woodland (2000–1600 BP) artifacts. Bourque, Dincauze, and Dr. Arthur Spiess, of the Maine Historic Preservation Commission, have suggested that the style of the bone comb top in the collection resembles Beothuk or Inuit styles more characteristic of Newfoundland than Maine. However, since most of the materials are from the Ceramic Period, the officials of the Department of Anthropology, University of Massachusetts, Amherst, reasonably believe they are from the same type of burials. In 2008, a tribal representative of the Penobscot Tribe of Maine, after reviewing the materials, concurred with Dincauze and Bourque and found the

artifact assemblage to be consistent with possible associated funerary objects from Ceramic Period burials in Maine.

The Aroostook Band of Micmac Indians of Maine, Houlton Band of Maliseet Indians of Maine, Passamaquoddy Tribe of Maine, and Penobscot Tribe of Maine, represented by the Wabanaki Intertribal Repatriation Committee, a non-Federally recognized Indian group, are widely recognized as having a shared cultural relationship with the people of the Ceramic Period of Maine (2,000 B.P. to European contact).

Officials of the Department of Anthropology, University of Massachusetts, Amherst have determined that pursuant to 25 U.S.C. 3001 (9–10), the human remains described above represent the physical remains of four individuals of Native American ancestry. Officials of the Department of Anthropology, University of Massachusetts, Amherst also have determined that, pursuant to 25 U.S.C. 3001 (3)(A), the 128 objects described above are reasonably believed to have been placed with or near individual human remains at the time of death or later as part of the death rite or ceremony. Lastly, officials of the Department of Anthropology, University of Massachusetts, Amherst have determined that, pursuant to 25 U.S.C. 3001 (2), there is a relationship of shared group identity that can reasonably be traced between the Native American human remains and the associated funerary objects and the Aroostook Band of Micmac Indians of Maine, Houlton Band of Maliseet Indians of Maine, Passamaquoddy Tribe of Maine, and Penobscot Tribe of Maine, represented by the Wabanaki Intertribal Repatriation Committee, a non-Federally recognized Indian group.

Representatives of any other Indian tribe that believes itself to be culturally affiliated with the human remains and associated funerary objects should contact Robert Paynter, Repatriation Committee Chair, Department of Anthropology, University of Massachusetts, 201 Machmer Hall, 240 Hicks Way, Amherst, MA 01003, telephone (413)545–2221, before April 24, 2009. Repatriation of the human remains and associated funerary objects to the Aroostook Band of Micmac Indians of Maine, Houlton Band of Maliseet Indians of Maine, Passamaquoddy Tribe of Maine, and Penobscot Tribe of Maine, represented by the Wabanaki Intertribal Repatriation Committee, a non-Federally recognized Indian group, may proceed after that date if no additional claimants come forward.

The Department of Anthropology, University of Massachusetts, Amherst is responsible for notifying Amherst College and Smith College, and the Aroostook Band of Micmac Indians of Maine, Houlton Band of Maliseet Indians of Maine, Passamaquoddy Tribe of Maine, Penobscot Tribe of Maine, and Wabanaki Intertribal Repatriation Committee, a non-Federally recognized Indian group, that this notice has been published.

Dated: March 12, 2009

Sherry Hutt,

Manager, National NAGPRA Program.

[FR Doc. E9–6508 Filed 3–24–09; 8:45 am]

BILLING CODE 4312–50–S

DEPARTMENT OF THE INTERIOR

National Park Service

Notice of Inventory Completion: Georgia Department of Natural Resources, Atlanta, GA

AGENCY: National Park Service, Interior.

ACTION: Notice.

Notice is here given in accordance with the Native American Graves Protection and Repatriation Act (NAGPRA), 25 U.S.C. 3003, of the completion of an inventory of human remains and associated funerary objects in the possession of the Georgia Department of Natural Resources, Atlanta, GA. The human remains and associated funerary objects were removed from Bartow County, GA.

This notice is published as part of the National Park Service's administrative responsibilities under NAGPRA, 25 U.S.C. 3003 (d)(3). The determinations in this notice are the sole responsibility of the museum, institution, or Federal agency that has control of the Native American human remains and associated funerary objects. The National Park Service is not responsible for the determinations in this notice.

A detailed assessment of the human remains was made by the Georgia Department of Natural Resources professional staff in consultation with representatives of the Alabama-Quassarte Tribal Town, Oklahoma; Eastern Band of Cherokee Indians of North Carolina; Kialegee Tribal Town, Oklahoma; Muscogee (Creek) Nation, Oklahoma; Poarch Band of Creek Indians of Alabama; Thlopthlocco Tribal Town, Oklahoma; and United Keetoowah Band of Cherokee Indians in Oklahoma.

In 1954–61, 1962, 1964–65, and 1972–73, human remains representing a minimum of 404 individuals were removed from the Etowah Mounds, Etowah Indian Mounds State Historic Site (9BR1) in Bartow County, GA. No known individuals were identified. The 187,060 associated funerary objects are 1 anvil fragment; 10 bone awls/fragments; 3 stone axes; 129 copper symbol badges/fragments; 6 woven cane basket fragments; 4 tortoise shell batons; 2 bone beads; 1 clay bead; 19 copper covered wooden beads/fragments; 1 copper bead; 1 blue glass bead; 8,273 pearl beads; 159,572 shell beads; 5 wooden beads; 11 stone blades; 2 copper covered wooden bodkins; 38 shell bowls/fragments; 1 wooden bowl; 11 copper celts; 1 iron celt; 22 stone celts/fragments; 2 indeterminate celts; 6 chunkey stones; 3 copper covered wood coils; 2 chert core; 23 quartz crystals; 42 daub samples; 36 ceramic discs; 64 mica discs; 7 shell discs; 6 stone discs; 5 wooden discs; 2 stone drills; 54 copper covered ear discs; 2 mica ear discs; 1 shell ear disc (nos. 3 & 4); 1 ear disc of undocumented material; 2 wooden ear discs; 1 clay ear ornament; 1 copper ear spool; 2 painted stone figures; 50 charcoal samples; 75 ethnobotanical remains; 567 cane matting; 3,957 faunal remains; 6 split cane fragments; 6 fabric/cloth fragments; 1 fur fragment; 567 hair fragments; 3 leather fragments; 3 miscellaneous mixed fur/leather/fabric fibers; 2 strings; 3 fibers; 1 bone fish hook; 233 stone flakes; 24 copper fragments; 10 unfired clay samples; 8 clay samples; 19 pigment samples; 4 soil samples; 291 stones; 7 copper gorgets/fragments; 39 shell gorgets/fragments; 23 copper hair ornaments; 1 tortoise shell hair ornament; 5 hammerstone; 2 copper headdresses; 2 mica headdress pieces; 13 fragments from a headdress; 1 wooden headdress fragment; 11 shell hoes; 3 stone knives; 1 plaster cast of a log; 23 copper-covered wooden mask fragments; 1 shell mask; 2 pieces of cane matting; 6 plaster casts of cane matting; 1 nutting stone; 1 baked clay cylinder-shaped object; 61 copper ornaments; 199 decorations/ornaments/fragments; 4 sun symbols; 17 tortoise shell ornaments/fragments; 7 stone paint palettes; 22 shell pendants; 13 bone pins/fragments; 1 copper covered wooden pin; 2 ear pins of undocumented material; 12 shell ear pins/fragments; 1 tortoise shell pin; 3 ear disc pins; 3 wooden pins; 13 ceramic pipes/fragments; 1 pipe fragment; 6 stone pipes; 12 copper plates; 4 polished stones; 13 antler projectile points; 4 bone projectile points; 37 stone projectile points/knives; 2 quartz crystals; 10 wooden rattle fragments; 1 stone ring; 2 logs; 1,348 shells/fragments; 10,791 ceramic

sherds; 10 shell spoons/fragments; 1 wooden tablet; 19 bone tools; 1 polished bone tube; 3 samples of unidentified material; 27 ceramic vessels; 1 sample of material from inside of a copper covered coiled wooden object; 41 wood/fragments; 1 worked shell; and 20 miscellaneous worked stone/fragments.

The excavations at the site were primarily conducted at an area currently identified as ''Mound C,'' which had previously been partially excavated by other agencies, at the edge of Mound B and in the ''Village Area'' of the 52–acre historic site. Radiocarbon studies indicate that the burials date from A.D. 800 to 1400. The site is normally identified as a ''Mississippi Site'' that dates from A.D. 900 to 1550. There is no absolute archeological proof that links the site with any modern day Indian tribe. Evidence in the form of historical documents, early maps, and a listing of common lifeway traits were presented by the Muscogee (Creek) Nation of Oklahoma, Poarch Band of Creeks, Kialegee Tribal Town, Thlopthlocco Tribal Town, and Alabama-Quassarte Tribal Town during consultation. Similar information was presented by the Cherokee Nation of Oklahoma, Eastern Band of Cherokee Indians, and United Keetowah Band of Cherokee Indians, who occupied the Bartow County area at the time of forced removal (A.D. 1838). However, the Cherokee do not have a shared group relationship to the Native American human remains described in this notice, as the Cherokee were not present in the area prior to approximately A.D. 1450, which post-dates the burials at Etowah.

The results of the consultation and studies with the tribes, have determined that there is a reasonable belief of a shared group identity between the Native American human remains and associated funerary objects from the Etowah Mounds and the modern Muscogeean (Creek) Tribes. The Muscogeean (Creek) Tribes are represented by the Alabama-Quassarte Tribal Town, Oklahoma; Kialegee Tribal Town, Oklahoma; Muscogee (Creek) Nation, Oklahoma; Poarch Band of Creek Indians of Alabama; and Thlopthlocco Tribal Town, Oklahoma.

Officials of the Georgia Department of Natural Resources have determined that, pursuant to 25 U.S.C. 3001 (9–10), the human remains described above represent the physical remains of 404 individuals of Native American ancestry. Officials of the Georgia Department of Natural Resources also have determined that, pursuant to 25 U.S.C. 3001 (3)(A), the 187,060 objects described above are reasonably believed to have been placed with or near individual human remains at the time of death or later as part of the death rite or ceremony. Lastly, officials of the Georgia Department of Natural Resources have determined that, pursuant to 25 U.S.C. 3001 (2), there is a relationship of shared group identity that can be reasonably traced between the Native American human remains and associated funerary objects and the Alabama-Quassarte Tribal Town, Oklahoma; Kialegee Tribal Town, Oklahoma; Muscogee (Creek) Nation, Oklahoma; Poarch Band of Creek Indians of Alabama; and Thlopthlocco Tribal Town, Oklahoma.

Representatives of any other Indian tribe that believes itself to be culturally affiliated with the human remains and/or associated funerary objects should contact Dr. David Crass, State Archaeologist, Department of Natural Resources, Historic Preservation Division, 34 Peachtree Street NW, Suite 1600, Atlanta, GA 30303, telephone (404) 656–9344, before April 24, 2009. Repatriation of the human remains and associated funerary objects to the Alabama-Quassarte Tribal Town, Oklahoma; Kialegee Tribal Town, Oklahoma; Muscogee (Creek) Nation, Oklahoma; Poarch Band of Creek Indians of Alabama; and Thlopthlocco Tribal Town, Oklahoma may proceed after that date if no additional claimants come forward.

The Georgia Department of Natural Resources is responsible for notifying the Alabama-Quassarte Tribal Town, Oklahoma; Eastern Band of Cherokee Indians of North Carolina; Kialegee Tribal Town, Oklahoma; Muscogee (Creek) Nation, Oklahoma; Poarch Band of Creek Indians of Alabama; Thlopthlocco Tribal Town, Oklahoma; and United Keetoowah Band of Cherokee Indians in Oklahoma that this notice has been published.

Dated: March 2, 2009

Sherry Hutt,

Manager, National NAGPRA Program.

[FR Doc. E9–6507 Filed 3–24–09; 8:45 am]

BILLING CODE 4312–50–S

DEPARTMENT OF THE INTERIOR

National Park Service

Notice of Inventory Completion: Northwest Museum, Whitman College, Walla Walla, WA

AGENCY: National Park Service, Interior.

ACTION: Notice.

Notice is here given in accordance with the Native American Graves Protection and Repatriation Act (NAGPRA), 25 U.S.C. 3003, of the completion of an inventory of human remains in the possession of the Northwest Museum (formerly Maxey Museum), Whitman College, Walla Walla, WA. The human remains were removed from Walla Walla County, WA.

This notice is published as part of the National Park Service's administrative responsibilities under NAGPRA, 25 U.S.C. 3003 (d)(3). The determinations in this notice are the sole responsibility of the museum, institution, or Federal agency that has control of the Native American human remains. The National Park Service is not responsible for the determinations in this notice.

A detailed assessment of the human remains was made by the Whitman College and Northwest Museum professional staff in consultation with representatives of the Confederated Tribes of the Umatilla Indian Reservation, Oregon.

On an unknown date, human remains representing a minimum of one individual were removed from a home site in Walla Walla, Walla Walla County, WA. In 1929, the human remains were donated to the Northwest Museum at Whitman College by Mr. Emory Frank (WHIT–X–0008; Old Cat. No. 540, 5743 and WHIT–XX–0049; Old Cat. No. 5743). No known individual was identified. No associated funerary objects are present.

According to museum records, the human remains were identified as Indian, and were found buried in a sitting position. The human remains are determined to be Native American based on skeletal morphology, as well as on museum records of the provenience.

The city of Walla Walla is within the ceded lands of the Confederated Tribes of the Umatilla Indian Reservation, Oregon. The ceded land of the Confederated Tribes of the Umatilla Indian Reservation extends over 6.4 million acres in eastern Oregon and southeast Washington, and was occupied by the Weyiiletpu. Walla Walla is in an area that the Pasxapu band of the Weyiiletpu used for winter quarters. The Walla Walla River and its tributaries is where they fished for salmon and gathered foods and medicines along the river banks and ridges. The Pasxapu summers were spent hunting, fishing, and gathering foods and medicines in the adjacent Blue Mountains. Consultation evidence from tribal representatives of the Confederated Tribes of the Umatilla Indian Reservation further supports this evidence of occupation. Descendants of the Walla Walla (Waluulapam), Umatilla (Imatalamlama), and Cayuse (Weyiiletpu) tribes that are enrolled in

the Confederated Tribes of the Umatilla Indian Reservation, Oregon, are of the Shahaptian cultural group.

Officials of the Northwest Museum, Whitman College have determined that, pursuant to 25 U.S.C. 3001 (9–10), the human remains described above represent the physical remains of one individual of Native American ancestry. Officials of the Northwest Museum, Whitman College also have determined that, pursuant to 25 U.S.C. 3001 (2), there is a relationship of shared group identity that can be reasonably traced between the Native American human remains and the Confederated Tribes of the Umatilla Indian Reservation, Oregon.

Representatives of any other Indian tribe that believes itself to be culturally affiliated with the human remains should contact Brian Dott, Director, Northwest Museum, Maxey Hall, Whitman College, 345 Boyer Ave., Walla Walla, WA 99362, telephone (509) 527–5776, fax (509) 527–5026, before April 24, 2009. Repatriation of the human remains to the Confederated Tribes of the Umatilla Indian Reservation, Oregon may proceed after that date if no additional claimants come forward.

The Northwest Museum, Whitman College is responsible for notifying the Confederated Tribes of the Umatilla Indian Reservation, Oregon that this notice has been published.

Dated: March 10, 2009

Sherry Hutt,

Manager, National NAGPRA Program.

[FR Doc. E9–6512 Filed 3–24–09; 8:45 am]

BILLING CODE 4312–50–S

DEPARTMENT OF THE INTERIOR

National Park Service

Notice of Inventory Completion: Texarkana Museums System, Texarkana, TX

AGENCY: National Park Service, Interior.

ACTION: Notice.

Notice is here given in accordance with the Native American Graves Protection and Repatriation Act (NAGPRA), 25 U.S.C. 3003, of the completion of an inventory of human remains and associated funerary objects in the possession of the Texarkana Museums System (formerly the Texarkana Historical Museum), Texarkana, TX. The human remains and associated funerary objects were removed from Bowie County, TX.

This notice is published as part of the National Park Service's administrative responsibilities under NAGPRA, 25 U.S.C. 3003 (d)(3). The determinations in this notice are the sole responsibility of the museum, institution, or Federal agency that has control of the Native American human remains and associated funerary objects. The National Park Service is not responsible for the determinations in this notice.

A detailed assessment of the human remains was made by the Texarkana Museums System professional staff in consultation with representatives of the Caddo Nation of Oklahoma.

In 1978, human remains representing a minimum of three individuals were removed from the Cabe Mounds in Bowie County, TX. The human remains and associated artifacts were acquired by the museum through its then-director, Katy Caver, as part of an archeological survey of the region. No known individuals were identified. The 141 associated funerary objects are 3 pieces of pottery; 13 pottery fragments; 2 beads; 2 projectile points; 70 lots of debitage; and 51 pre-form tools and fragments.

Two of the three individuals removed from the Cabe Mounds were found scattered around two burials, and the remaining individual was found intact in a third burial. The pottery fragments, tools and tool fragments were found scattered among all three burials. The human remains and associated funerary objects are related to the Caddo Nation who settled the Red River Valley more than 1,200 years ago. The Caddo Nation remained a strong presence in this region well into the 18th century. The manner of interment is consistent with Caddo tradition, as are the decorative and construction techniques used in the pottery found in proximity to the grave sites. References to the complex now known as the Cabe Mounds date back to the latter part of the 19th century and were made by C.B. Moore, one of the first to identify and explore Caddo sites in East Texas. The site was acquired by the Archaeological Conservancy in 1985.

Officials of the Texarkana Museums System have determined that, pursuant to 25 U.S.C. 3001 (9–10), the human remains described above represent the physical remains of three individuals of Native American ancestry. Officials of the Texarkana Museums System also have determined that, pursuant to 25 U.S.C. 3001 (3)(A), the 141 objects described above are reasonably believed to have been placed with or near individual human remains at the time of death or later as part of the death rite or ceremony. Lastly, officials of the Texarkana Museums System have determined that, pursuant to 25 U.S.C. 3001 (2), there is a relationship of shared group identity that can be reasonably traced between the Native American human remains and associated funerary objects and the Caddo Nation of Oklahoma.

Representatives of any other Indian tribe that believes itself to be culturally affiliated with the human remains and associated funerary objects should contact J.A. Simmons, Texarkana Museums System, PO Box 2343, Texarkana, TX 75504, telephone (903) 793–4831, before April 24, 2009. Repatriation of the human remains and associated funerary objects to the Caddo Nation of Oklahoma may proceed after that date if no additional claimants come forward.

The Texarkana Museums System is responsible for notifying the Caddo Nation of Oklahoma that this notice has been published.

Dated: March 10, 2009

Sherry Hutt,

Manager, National NAGPRA Program.

[FR Doc. E9–6513 Filed 3–24–09; 8:45 am]

BILLING CODE 4312–50–S

INTERNATIONAL TRADE COMMISSION

[Investigation Nos. 701–TA–460–461 (Preliminary)]

Ni-Resist Piston Inserts from Argentina and Korea; Determinations

On the basis of the record [1] developed in the subject investigations, the United States International Trade Commission (Commission) determines, pursuant to section 703(a) of the Tariff Act of 1930 (19 U.S.C. 1671b(a)) (the Act), that there is a reasonable indication that an industry in the United States is materially injured by reason of imports from Argentina and Korea of Ni-resist piston inserts, provided for in subheading 8409.99.91 of the Harmonized Tariff Schedule of the United States, that are alleged to be subsidized by the Governments of Argentina and Korea.

Commencement of Final Phase Investigations

Pursuant to section 207.18 of the Commission's rules, the Commission also gives notice of the commencement of the final phase of its investigations. The Commission will issue a final phase notice of scheduling, which will be published in the **Federal Register** as

[1] The record is defined in sec. 207.2(f) of the Commission's Rules of Practice and Procedure (19 CFR 207.2(f)).

provided in section 207.21 of the Commission's rules, upon notice from the Department of Commerce (Commerce) of affirmative preliminary determinations in the investigations under section 703(b) of the Act, or, if the preliminary determinations are negative, upon notice of affirmative final determinations in those investigations under section 705(a) of the Act. Parties that filed entries of appearance in the preliminary phase of the investigations need not enter a separate appearance for the final phase of the investigations. Industrial users, and, if the merchandise under investigation is sold at the retail level, representative consumer organizations have the right to appear as parties in Commission countervailing duty investigations. The Secretary will prepare a public service list containing the names and addresses of all persons, or their representatives, who are parties to the investigations.

Background

On January 26, 2009, a petition was filed with the Commission and Commerce by Korff Holdings LLC dba Quaker City Castings, Salem, Ohio, alleging that an industry in the United States is materially injured by reason of subsidized imports of Ni-resist piston inserts from Argentina and Korea. Accordingly, effective January 26, 2009, the Commission instituted countervailing duty investigations Nos. 701–TA–460–461 (Preliminary).

Notice of the institution of the Commission's investigations and of a public conference to be held in connection therewith was given by posting copies of the notice in the Office of the Secretary, U.S. International Trade Commission, Washington, DC, and by publishing the notice in the **Federal Register** of February 3, 2009 (74 FR 5946). The conference was held in Washington, DC, on February 17, 2009, and all persons who requested the opportunity were permitted to appear in person or by counsel.

The Commission transmitted its determinations in these investigations to the Secretary of Commerce on March 12, 2009. The views of the Commission are contained in USITC Publication 4066 (March 2009), entitled Ni-Resist Piston Inserts from Argentina and Korea: Investigation Nos. 701–TA–460–461 (Preliminary).

By order of the Commission.

Issued: March 19, 2009.

Marilyn R. Abbott,

Secretary to the Commission.

[FR Doc. E9–6491 Filed 3–24–09; 8:45 am]

BILLING CODE 7020–02–P

INTERNATIONAL TRADE COMMISSION

[USITC SE–09–010]

Government in the Sunshine Act Meeting Notice

AGENCY HOLDING THE MEETING: United States International Trade Commission.

TIME AND DATE: April 3, 2009 at 11 a.m.

PLACE: Room 101, 500 E Street SW., Washington, DC 20436, *Telephone:* (202) 205–2000.

STATUS: Open to the public.

MATTERS TO BE CONSIDERED:

1. Agenda for future meetings: None.
2. Minutes.
3. Ratification List.
4. Inv. Nos. 731–TA–1146 and 1147 (Final)(HEDP from China and India)—briefing and vote. (The Commission is currently scheduled to transmit its determinations and Commissioners' opinions to the Secretary of Commerce on or before April 17, 2009.)
5. Outstanding action jackets: none.

In accordance with Commission policy, subject matter listed above, not disposed of at the scheduled meeting, may be carried over to the agenda of the following meeting.

By order of the Commission:

Issued: March 23, 2009.

William R. Bishop,

Hearings and Meetings Coordinator.

[FR Doc. E9–6776 Filed 3–23–09; 4:15 pm]

BILLING CODE 7020–02–P

INTERNATIONAL TRADE COMMISSION

[USITC SE–09–011]

Government in the Sunshine Act Meeting Notice

AGENCY HOLDING THE MEETING: United States International Trade Commission.

TIME AND DATE: April 8, 2009 at 2 p.m.

PLACE: Room 101, 500 E Street SW., Washington, DC 20436, *Telephone:* (202) 205–2000.

STATUS: Open to the public.

MATTERS TO BE CONSIDERED:

1. Agenda for future meetings: None.
2. Minutes.
3. Ratification List.
4. Inv. Nos. 731–TA–1148 (Final)(Frontseating Service Valves from China)—briefing and vote. (The Commission is currently scheduled to transmit its determination and Commissioners' opinions to the Secretary of Commerce on or before April 20, 2009.)
5. Outstanding action jackets: None.

In accordance with Commission policy, subject matter listed above, not disposed of at the scheduled meeting, may be carried over to the agenda of the following meeting.

By order of the Commission.

Issued: March 23, 2009.

William R. Bishop,

Hearings and Meetings Coordinator.

[FR Doc. E9–6777 Filed 3–23–09; 4:15 pm]

BILLING CODE 7020–02–P

DEPARTMENT OF JUSTICE

[OMB Number 1103–0093]

Office of Community Oriented Policing Services; Agency Information Collection Activities: Extension of a Currently Approved Collection; Comments Requested

ACTION: 60–Day Notice of Information Collection Under Review: COPS Extension Request Form.

The Department of Justice (DOJ) Office of Community Oriented Policing Services (COPS) will be submitting the following information collection request to the Office of Management and Budget (OMB) for review and approval in accordance with the Paperwork Reduction Act of 1995. The revision of a currently approved information collection is published to obtain comments from the public and affected agencies.

The purpose of this notice is to allow for 60 days for public comment until May 26, 2009. This process is conducted in accordance with 5 CFR 1320.10.

If you have comments especially on the estimated public burden or associated response time, suggestions, or need a copy of the proposed information collection instrument with instructions or additional information, please contact Rebekah Dorr, Department of Justice Office of Community Oriented Policing Services, 1100 Vermont Avenue, NW., Washington, DC 20530.

Written comments and suggestions from the public and affected agencies concerning the proposed collection of information are encouraged. Your comments should address one or more of the following four points:

—Evaluate whether the proposed collection of information is necessary for the proper performance of the functions of the agency, including whether the information will have practical utility;

—Evaluate the accuracy of the agency's estimate of the burden of the proposed collection of information,

including the validity of the methodology and assumptions used;

—Enhance the quality, utility, and clarity of the information to be collected; and

—Minimize the burden of the collection of information on those who are to respond, including through the use of appropriate automated, electronic, mechanical, or other technological collection techniques or other forms of information technology, *e.g.*, permitting electronic submission of responses.

Overview of This Information Collection

(1) *Type of Information Collection:* Revision of a Currently Approved Collection.

(2) *Title of the Form/Collection:* Extension Request Form.

(3) Agency form number, if any, and the applicable component of the Department sponsoring the collection: None. U.S. Department of Justice Office of Community Oriented Policing Services.

(4) Affected public who will be asked or required to respond, as well as a brief abstract: Primary: Law enforcement agencies that are recipients of COPS grants which are expiring within 90 days of the date of the form.

(5) An estimate of the total number of respondents and the amount of time estimated for an average respondent to respond/reply: It is estimated that approximately 2,700 respondents annually will complete the form within 30 minutes.

(6) An estimate of the total public burden (in hours) associated with the collection: 1,350 total annual burden hours.

If additional information is required contact: Lynn Bryant, Deputy Clearance Officer, United States Department of Justice, Justice Management Division, Policy and Planning Staff, Patrick Henry Building, Suite 1600, 601 D Street, NW., Washington, DC 20530.

Dated: March 20, 2009.

Lynn Bryant,

Department Clearance Officer, PRA, United States Department of Justice.

[FR Doc. E9–6572 Filed 3–24–09; 8:45 am]

BILLING CODE 4410–AT–P

DEPARTMENT OF JUSTICE

Bureau of Alcohol, Tobacco, Firearms and Explosives

[OMB Number 1140–0051]

Agency Information Collection Activities: Proposed collection; comments requested

ACTION: 30-Day Notice of Information Collection Under Review: Certification of Secure Gun Storage or Safety Devices.

The Department of Justice (DOJ), Bureau of Alcohol, Tobacco, Firearms and Explosives (ATF) has submitted the following information collection request to the Office of Management and Budget (OMB) for review and approval in accordance with the Paperwork Reduction Act of 1995. The proposed information collection is published to obtain comments from the public and affected agencies. This proposed information collection was previously published in the **Federal Register** Volume 74, Number 10, page 2617–2618, on January 15, 2009, allowing for a 60 day comment period.

The purpose of this notice is to allow for an additional 30 days for public comment until April 24, 2009. This process is conducted in accordance with 5 CFR 1320.10.

Written comments and/or suggestions regarding the items contained in this notice, especially the estimated public burden and associated response time, should be directed to The Office of Management and Budget, Office of Information and Regulatory Affairs, Attention Department of Justice Desk Officer, Washington, DC 20503. Additionally, comments may be submitted to OMB via facsimile to (202)–395–5806.

Written comments and suggestions from the public and affected agencies concerning the proposed collection of information are encouraged. Your comments should address one or more of the following four points:

—Evaluate whether the proposed collection of information is necessary for the proper performance of the functions of the agency, including whether the information will have practical utility;

—Evaluate the accuracy of the agencies estimate of the burden of the proposed collection of information, including the validity of the methodology and assumptions used;

—Enhance the quality, utility, and clarity of the information to be collected; and

—Minimize the burden of the collection of information on those who are to respond, including through the use of appropriate automated, electronic, mechanical, or other technological collection techniques or other forms of information technology, *e.g.*, permitting electronic submission of responses.

Overview of This Information Collection

(1) *Type of Information Collection:* Extension of a currently approved collection.

(2) *Title of the Form/Collection:* Certification of Secure Gun Storage or Safety Devices.

(3) *Agency form number, if any, and the applicable component of the Department of Justice sponsoring the collection: Form Number:* ATF F 5300.42. Bureau of Alcohol, Tobacco, Firearms and Explosives.

(4) *Affected public who will be asked or required to respond, as well as a brief abstract: Primary:* Business or other for-profit. *Other:* None. The requested information will be used to ensure that applicants for a federal firearms license are in compliance with the requirements pertaining to the availability of secure gun storage or safety devices.

(5) *An estimate of the total number of respondents and the amount of time estimated for an average respondent to respond:* There will be an estimated 61,641 respondents, who will complete the form within approximately 1 minute.

(6) *An estimate of the total burden (in hours) associated with the collection:* There are an estimated 1,233 total burden hours associated with this collection.

If additional information is required contact: Lynn Bryant, Department Clearance Officer, United States Department of Justice, Policy and Planning Staff, Justice Management Division, Suite 1600, Patrick Henry Building, 601 D Street, NW., Washington, DC 20530.

Dated: March 19, 2009.

Lynn Bryant,

Department Clearance Officer, PRA, United States Department of Justice.

[FR Doc. E9–6485 Filed 3–24–09; 8:45 am]

BILLING CODE 4410–FY–P

DEPARTMENT OF LABOR

Employment and Training Administration

Notice of Determinations Regarding Eligibility To Apply for Worker Adjustment Assistance and Alternative Trade Adjustment Assistance

In accordance with Section 223 of the Trade Act of 1974, as amended (19 U.S.C. 2273) the Department of Labor herein presents summaries of determinations regarding eligibility to apply for trade adjustment assistance for workers (TA–W) number and alternative trade adjustment assistance (ATAA) by (TA–W) number issued during the period of March 9 through March 13, 2009.

In order for an affirmative determination to be made for workers of a primary firm and a certification issued regarding eligibility to apply for worker adjustment assistance, each of the group eligibility requirements of Section 222(a) of the Act must be met.

I. Section (a)(2)(A) all of the following must be satisfied:

A. A significant number or proportion of the workers in such workers' firm, or an appropriate subdivision of the firm, have become totally or partially separated, or are threatened to become totally or partially separated;

B. the sales or production, or both, of such firm or subdivision have decreased absolutely; and

C. increased imports of articles like or directly competitive with articles produced by such firm or subdivision have contributed importantly to such workers' separation or threat of separation and to the decline in sales or production of such firm or subdivision; or

II. Section (a)(2)(B) both of the following must be satisfied:

A. A significant number or proportion of the workers in such workers' firm, or an appropriate subdivision of the firm, have become totally or partially separated, or are threatened to become totally or partially separated;

B. there has been a shift in production by such workers' firm or subdivision to a foreign country of articles like or directly competitive with articles which are produced by such firm or subdivision; and

C. One of the following must be satisfied:

1. The country to which the workers' firm has shifted production of the articles is a party to a free trade agreement with the United States;

2. the country to which the workers' firm has shifted production of the articles to a beneficiary country under the Andean Trade Preference Act, African Growth and Opportunity Act, or the Caribbean Basin Economic Recovery Act; or

3. there has been or is likely to be an increase in imports of articles that are like or directly competitive with articles which are or were produced by such firm or subdivision.

Also, in order for an affirmative determination to be made for secondarily affected workers of a firm and a certification issued regarding eligibility to apply for worker adjustment assistance, each of the group eligibility requirements of Section 222(b) of the Act must be met.

(1) Significant number or proportion of the workers in the workers' firm or an appropriate subdivision of the firm have become totally or partially separated, or are threatened to become totally or partially separated;

(2) the workers' firm (or subdivision) is a supplier or downstream producer to a firm (or subdivision) that employed a group of workers who received a certification of eligibility to apply for trade adjustment assistance benefits and such supply or production is related to the article that was the basis for such certification; and

(3) either—

(A) the workers' firm is a supplier and the component parts it supplied for the firm (or subdivision) described in paragraph (2) accounted for at least 20 percent of the production or sales of the workers' firm; or

(B) a loss or business by the workers' firm with the firm (or subdivision) described in paragraph (2) contributed importantly to the workers' separation or threat of separation.

In order for the Division of Trade Adjustment Assistance to issue a certification of eligibility to apply for Alternative Trade Adjustment Assistance (ATAA) for older workers, the group eligibility requirements of Section 246(a)(3)(A)(ii) of the Trade Act must be met.

1. Whether a significant number of workers in the workers' firm are 50 years of age or older.

2. Whether the workers in the workers' firm possess skills that are not easily transferable.

3. The competitive conditions within the workers' industry (i.e., conditions within the industry are adverse).

Affirmative Determinations for Worker Adjustment Assistance

The following certifications have been issued. The date following the company name and location of each determination references the impact date for all workers of such determination.

The following certifications have been issued. The requirements of Section 222(a)(2)(A) (increased imports) of the Trade Act have been met.

None.

The following certifications have been issued. The requirements of Section 222(a)(2)(B) (shift in production) of the Trade Act have been met.

None.

The following certifications have been issued. The requirements of Section 222(b) (supplier to a firm whose workers are certified eligible to apply for TAA) of the Trade Act have been met.

None.

The following certifications have been issued. The requirements of Section 222(b) (downstream producer for a firm whose workers are certified eligible to apply for TAA based on increased imports from or a shift in production to Mexico or Canada) of the Trade Act have been met.

None.

Affirmative Determinations for Worker Adjustment Assistance and Alternative Trade Adjustment Assistance

The following certifications have been issued. The date following the company name and location of each determination references the impact date for all workers of such determination.

The following certifications have been issued. The requirements of Section 222(a)(2)(A) (increased imports) and Section 246(a)(3)(A)(ii) of the Trade Act have been met.

TA–W–64,993; TTM Technologies, leased workers From Kelly Services, Redmond, WA: January 23, 2008.

The following certifications have been issued. The requirements of Section 222(a)(2)(B) (shift in production) and Section 246(a)(3)(A)(ii) of the Trade Act have been met.

TA–W–65,473; Bakers Pride Oven Company, Inc., New Rochelle, NY: February 25, 2008.

TA–W–65,100; Kimball Electronics, Inc., Jasper, IN: September 28, 2008.

The following certifications have been issued. The requirements of Section 222(b) (supplier to a firm whose workers are certified eligible to apply for TAA) and Section 246(a)(3)(A)(ii) of the Trade Act have been met.

TA–W–65,023A; Silberline Manufacturing Company, Inc., Lansford Facility, Lansford, PA: April 20, 2009.

TA–W–65,023B; Silberline Manufacturing Company, Inc., Tidewood Facility, Tidewood, PA: April 20, 2009.

TA–W–65,023C; Silberline Manufacturing Company, Inc., Decatur Facility, Decatur, PA: April 20, 2009.

TA–W–65,023; Silberline Manufacturing Company, Inc., Hometown Facility, Tamaqua, PA: April 20, 2009.

TA–W–65,087; Industrial Minerals, Inc., Blacksburg, SC: January 28, 2008.

The following certifications have been issued. The requirements of Section 222(b) (downstream producer for a firm whose workers are certified eligible to apply for TAA based on increased imports from or a shift in production to Mexico or Canada) and Section 246(a)(3)(A)(ii) of the Trade Act have been met.

None.

Negative Determinations for Alternative Trade Adjustment Assistance

In the following cases, it has been determined that the requirements of 246(a)(3)(A)(ii) have not been met for the reasons specified.

The Department has determined that criterion (1) of Section 246 has not been met. The firm does not have a significant number of workers 50 years of age or older.

None.

The Department has determined that criterion (2) of Section 246 has not been met. Workers at the firm possess skills that are easily transferable.

None.

The Department has determined that criterion (3) of Section 246 has not been met. Competition conditions within the workers' industry are not adverse.

None.

Negative Determinations for Worker Adjustment Assistance and Alternative Trade Adjustment Assistance

In the following cases, the investigation revealed that the eligibility criteria for worker adjustment assistance have not been met for the reasons specified.

Because the workers of the firm are not eligible to apply for TAA, the workers cannot be certified eligible for ATAA.

The investigation revealed that criteria (a)(2)(A)(I.A.) and (a)(2)(B)(II.A.) (employment decline) have not been met.

None.

The investigation revealed that criteria (a)(2)(A)(I.B.) (Sales or production, or both, did not decline) and (a)(2)(B)(II.B.) (shift in production to a foreign country) have not been met.

TA–W–64,996; Rebco, Inc., Kersey, PA.

The investigation revealed that criteria (a)(2)(A)(I.C.) (increased imports) and (a)(2)(B)(II.B.) (shift in production to a foreign country) have not been met.

TA–W–65,050; Ball Corporation, Kansas City, MO.

The workers' firm does not produce an article as required for certification under Section 222 of the Trade Act of 1974.

TA–W–65,035; Align Technology, Inc., Santa Clara, CA.

The investigation revealed that criteria of Section 222(b)(2) has not been met. The workers' firm (or subdivision) is not a supplier to or a downstream producer for a firm whose workers were certified eligible to apply for TAA.

None.

I hereby certify that the aforementioned determinations were issued during the period of March 9 through March 13, 2009. Copies of these determinations are available for inspection in Room N–5428, U.S. Department of Labor, 200 Constitution Avenue, NW., Washington, DC 20210 during normal business hours or will be mailed to persons who write to the above address.

Dated: March 18, 2009.

Linda G. Poole,

Certifying Officer, Division of Trade Adjustment Assistance.

[FR Doc. E9–6516 Filed 3–24–09; 8:45 am]

BILLING CODE 4510–FN–P

DEPARTMENT OF LABOR

Employment and Training Administration

[TA–W–65,157]

Alcoa, Inc., Alcoa, TN; Notice of Termination of Investigation

In accordance with Section 221 of the Trade Act of 1974, as amended, an investigation was initiated on February 6, 2009 in response to a petition filed by a Tennessee AFL–CIO Technical Assistance Program representative on behalf of workers of Alcoa, Inc., Alcoa, Tennessee.

The petitioner has requested that the petition be withdrawn. Consequently, the investigation has been terminated.

Signed in Washington, DC, this 17th day of March 2009.

Richard Church,

Certifying Officer, Division of Trade Adjustment Assistance.

[FR Doc. E9–6527 Filed 3–24–09; 8:45 am]

BILLING CODE 4510–FN–P

DEPARTMENT OF LABOR

Employment and Training Administration

[TA–W–64,880]

America's Business Operations, Dell USA L.P., Round Rock, TX; Notice of Termination of Investigation

Pursuant to Section 221 of the Trade Act of 1974, as amended, an investigation was initiated on January 13, 2009 in response to a petition on behalf of workers of America's Business Operations, Dell USA L.P., Round Rock, Texas.

The petitioners have requested that the petition be withdrawn. Consequently, the investigation has been terminated.

Signed at Washington, DC, this 18th day of March 2009.

Elliott S. Kushner,

Certifying Officer, Division of Trade Adjustment Assistance.

[FR Doc. E9–6517 Filed 3–24–09; 8:45 am]

BILLING CODE 4510–FN–P

DEPARTMENT OF LABOR

Employment and Training Administration

[TA–W–65,447]

BHP Billiton, BHP Copper, Inc., Pinto Valley Operations & San Manuel Arizona Railroad Company, Miami, AZ; Notice of Termination of Investigation

Pursuant to Section 221 of the Trade Act of 1974, as amended, an investigation was initiated on February 2, 2009 in response to a petition filed by a company official on behalf of all workers of BHP Billiton, BHP Copper, Inc., Pinto Valley Operations & San Manuel Arizona Railroad Company, Miami, Arizona.

The petitioner requested that the petition be withdrawn. Consequently, the investigation has been terminated.

Signed at Washington, DC, this 17th day of March 2009.

Richard Church,

Certifying Officer, Division of Trade Adjustment

[FR Doc. E9–6535 Filed 3–24–09; 8:45 am]

BILLING CODE 4510–FN–P

DEPARTMENT OF LABOR

Employment and Training Administration

[TA–W–65,487]

Boralex Sherman, LLC, Stacyville, ME; Notice of Termination of Investigation

Pursuant to Section 221 of the Trade Act of 1974, as amended, an investigation was initiated on March 4, 2009, in response to a worker petition filed by a company official on behalf of workers at Boralex Sherman, LLC, Stacyville, Maine.

The petitioner has requested that the petition be withdrawn. Consequently, the investigation has been terminated.

Signed at Washington, DC this 13th day of March 2009.

Linda G. Poole,

Certifying Officer, Division of Trade Adjustment Assistance.

[FR Doc. E9–6539 Filed 3–24–09; 8:45 am]

BILLING CODE 4510–FN–P

DEPARTMENT OF LABOR

Employment and Training Administration

[TA–W–65,463]

Century Land and Timber, Inc.; Greenville, NC; Notice of Termination of Investigation

Pursuant to Section 221 of the Trade Act of 1974, as amended, an investigation was initiated on March 4, 2009 in response to a petition filed by a company official on behalf of workers of Century Land and Timber, Inc., Greenville, North Carolina.

The petitioner has requested that the petition be withdrawn. Consequently, the investigation has been terminated.

Signed at Washington, DC, this 12th day of March 2009.

Linda G. Poole,

Certifying Officer, Division of Trade Adjustment Assistance.

[FR Doc. E9–6537 Filed 3–24–09; 8:45 am]

BILLING CODE 4510–FN–P

DEPARTMENT OF LABOR

Employment and Training Administration

[TA–W–65, 085]

Colorite Specialty Resins Burlington, NJ; Notice of Termination of Investigation

Pursuant to Section 221 of the Trade Act of 1974, as amended, an investigation was initiated on February 3, 2009 in response to a petition filed by the United Steelworkers of America, Local 4–890, on behalf of workers at Colorite Specialty Resins, Burlington, New Jersey.

The petitioner requested that the petition be withdrawn. Consequently, the investigation has been terminated.

Signed at Washington, DC, this 13th day of March 2009.

Richard Church,

Certifying Officer, Division of Trade Adjustment Assistance.

[FR Doc. E9–6524 Filed 3–24–09; 8:45 am]

BILLING CODE 4510–FN–P

DEPARTMENT OF LABOR

Employment and Training Administration

[TA–W–65,218]

D/E Associates, Shamokin, PA; Notice of Termination of Investigation

Pursuant to Section 221 of the Trade Act of 1974, as amended, an investigation was initiated on February 11, 2009 in response to a petition filed by a company official on behalf of workers of D/E Associates, Inc., Shamokin, Pennsylvania.

The petitioner has requested that the petition be withdrawn. Consequently, the investigation has been terminated.

Signed at Washington, DC, this 12th day of March 2009.

Linda G. Poole,

Certifying Officer, Division of Trade Adjustment Assistance.

[FR Doc. E9–6530 Filed 3–24–09; 8:45 am]

BILLING CODE 4510–FN–P

DEPARTMENT OF LABOR

Employment and Training Administration

[TA–W–65,061]

Gemeinhardt Company, LLC, Elkhart, IN; Notice of Termination of Investigation

Pursuant to Section 221 of the Trade Act of 1974, as amended, an investigation was initiated on February 2, 2009 in response to a petition filed by the Chauffeurs, Teamsters and Helpers Union, Local 364, on behalf of workers at Gemeinhardt Company, LLC, Elkhart, Indiana.

The petitioner requested that the petition be withdrawn. Consequently, the investigation has been terminated.

Signed at Washington, DC, this 13th day of March 2009.

Richard Church,

Certifying Officer, Division of Trade Adjustment Assistance.

[FR Doc. E9–6522 Filed 3–24–09; 8:45 am]

BILLING CODE

DEPARTMENT OF LABOR

Employment and Training Administration

[TA–W–65,385]

General Dynamics Itronix Corporation C4 Systems A Subsidiary of General Dynamics Corporation; Spokane Valley, WA; Notice of Termination of Investigation

Pursuant to Section 221 of the Trade Act of 1974, as amended, an investigation was initiated on February 25, 2009 in response to a petition filed by a company official on behalf of workers of General Dynamics Itronix Corporation, C4 Systems, a subsidiary of General Dynamics Corporation, Spokane Valley, Washington.

The petitioner has requested that the petition be withdrawn. Consequently, the investigation has been terminated.

Signed at Washington, DC, this 13th day of March 2009.

Elliott S. Kushner,

Certifying Officer, Division of Trade Adjustment Assistance.

[FR Doc. E9–6532 Filed 3–24–09; 8:45 am]

BILLING CODE 4510–FN–P

DEPARTMENT OF LABOR

Employment and Training Administration

[TA–W–65,446]

Glaxosmithkline, Pilot Plant, Collegeville, PA; Notice of Termination of Investigation

Pursuant to Section 221 of the Trade Act of 1974, as amended, an investigation was initiated on March 2, 2009, in response to a worker petition filed on behalf of workers at GlaxoSmithKline, Pilot Plant, Collegeville, Pennsylvania.

The petitioner has requested that the petition be withdrawn. Consequently, the investigation has been terminated.

Signed at Washington, DC this 13th day of March 2009.

Elliott S. Kushner,

Certifying Officer, Division of Trade Adjustment Assistance.

[FR Doc. E9–6534 Filed 3–24–09; 8:45 am]

BILLING CODE 4510–FN–P

DEPARTMENT OF LABOR

Employment and Training Administration

[TA–W–65,455]

Graphic Visual Solutions, Inc., Greensboro, NC; Notice of Termination of Investigation

Pursuant to Section 221 of the Trade Act of 1974, as amended, an investigation was initiated on March 3, 2009 in response to a worker petition filed by a company official on behalf of workers of Graphic Visual Solutions, Inc., Greensboro, North Carolina.

The petitioner has requested that the petition be withdrawn. Consequently, the investigation has been terminated.

Signed at Washington, DC, this 12th day of March 2009.

Richard Church,

Certifying Officer, Division of Trade Adjustment Assistance.

[FR Doc. E9–6536 Filed 3–24–09; 8:45 am]

BILLING CODE 4510–FN–P

DEPARTMENT OF LABOR

Employment and Training Administration

[TA–W–65,534]

ICTEL, Charleston, IL; Notice of Termination of Investigation

Pursuant to Section 221 of the Trade Act of 1974, as amended, an investigation was initiated on March 10, 2009 in response to a petition filed on behalf of workers of ICTEL, Charleston, Illinois.

The petitioners have requested that the petition be withdrawn. Consequently, the investigation has been terminated.

Signed at Washington, DC, this 13th day of March 2009.

Elliott S. Kushner,

Certifying Officer, Division of Trade Adjustment Assistance.

[FR Doc. E9–6543 Filed 3–24–09; 8:45 am]

BILLING CODE 4510–FN–P

DEPARTMENT OF LABOR

Employment and Training Administration

[TA–W–65,110]

Keystone Powdered Metal Company, St. Marys, PA; Notice of Termination of Investigation

Pursuant to Section 221 of the Trade Act of 1974, as amended, an investigation was initiated on February 4, 2009 in response to a petition filed by a company official on behalf of workers of Keystone Powdered Metal Company, St. Marys, Pennsylvania.

The petitioner has requested that the petition be withdrawn. Consequently, the investigation has been terminated.

Signed at Washington, DC, this 12th day of March 2009.

Linda G. Poole,

Certifying Officer, Division of Trade Adjustment Assistance.

[FR Doc. E9–6525 Filed 3–24–09; 8:45 am]

BILLING CODE 4510–FN–P

DEPARTMENT OF LABOR

Employment and Training Administration

[TA–W–65,038]

Koch Originals, Inc., Evansville, IN; Notice of Termination of Investigation

Pursuant to Section 221 of the Trade Act of 1974, as amended, an investigation was initiated on January 29, 2009 in response to a petition filed on behalf of the workers at Koch Originals, Inc., Evansville, Indiana.

The petitioners have requested that the petition be withdrawn. Consequently, the investigation has been terminated.

Signed at Washington, DC, this 17th day of March 2009.

Richard Church,

Certifying Officer, Division of Trade Adjustment Assistance.

[FR Doc. E9–6520 Filed 3–24–09; 8:45 am]

BILLING CODE 4510–FN–P

DEPARTMENT OF LABOR

Employment and Training Administration

[TA–W–65,539]

Lexis Nexis, San Francisco, CA; Notice of Termination of Investigation

Pursuant to Section 221 of the Trade Act of 1974, as amended, an investigation was initiated on February 10, 2009 in response to a petition filed by a State Workforce officer on behalf of all workers at Lexis Nexis, San Francisco, California.

The petitioner requested that the petition be withdrawn. Consequently, the investigation has been terminated.

Signed at Washington, DC, this 17th day of March 2009.

Richard Church,

Certifying Officer, Division of Trade Adjustment Assistance.

[FR Doc. E9–6544 Filed 3–24–09; 8:45 am]

BILLING CODE 4510–FN–P

DEPARTMENT OF LABOR

Employment and Training Administration

[TA–W–65,169]

Lyon Workerspace Products, LLC, Montgomery, IL; Notice of Termination of Investigation

Pursuant to Section 221 of the Trade Act of 1974, as amended, an investigation was initiated on February 9, 2009 in response to a petition filed by an official of the Illinois Department of Employment Security on behalf of workers at Lyon Workerspace Products, LLC, Montgomery, Illinois.

The petitioner requested that the petition be withdrawn. Consequently, the investigation has been terminated.

Signed at Washington, DC, this 17th day of March 2009.

Richard Church,

Certifying Officer, Division of Trade Adjustment Assistance.

[FR Doc. E9–6528 Filed 3–24–09; 8:45 am]

BILLING CODE 4510–FN–P

DEPARTMENT OF LABOR

Employment and Training Administration

[TA–W–65,478]

Metaldyne, Whitsett, NC; Notice of Termination of Investigation

Pursuant to Section 221 of the Trade Act of 1974, as amended, an investigation was initiated on March 4, 2009 in response to a petition filed by a company official on behalf of workers of Metaldyne, Whitsett, North Carolina.

The petitioner has requested that the petition be withdrawn. Consequently, the investigation has been terminated.

Signed at Washington, DC, this 13th day of March 2009.

Elliott S. Kushner,

Certifying Officer, Division of Trade Adjustment Assistance.

[FR Doc. E9–6538 Filed 3–24–09; 8:45 am]

BILLING CODE 4510–FN–P

DEPARTMENT OF LABOR

Employment and Training Administration

[TA–W–65,579]

Multi-Plastics, Inc., Saegertown, PA; Notice of Termination of Investigation

Pursuant to Section 221 of the Trade Act of 1974, as amended, an investigation was initiated on March 12, 2009, in response to a worker petition filed by a company official on behalf of workers at Multi-Plastics, Inc., Saegertown, Pennsylvania.

The petitioner has requested that the petition be withdrawn. Consequently, the investigation has been terminated.

Signed at Washington, DC this 13th day of March 2009.

Elliott S. Kushner,

Certifying Officer, Division of Trade Adjustment Assistance.

[FR Doc. E9–6515 Filed 3–24–09; 8:45 am]

BILLING CODE 4510–FN–P

DEPARTMENT OF LABOR

Employment and Training Administration

[TA–W–65,044]

Pittsburgh Glass Works, LLC, Evart, MI; Notice of Termination of Investigation

Pursuant to Section 221 of the Trade Act of 1974, as amended, an investigation was initiated on February 12, 2009 in response to a worker petition filed on behalf of workers of Pittsburgh Glass Works, LLC, Evart, Michigan.

The petitioners have requested that the petition be withdrawn. Consequently, the investigation has been terminated.

Signed at Washington, DC, this 12th day of March 2009.

Richard Church,

Certifying Officer, Division of Trade Adjustment Assistance.

[FR Doc. E9–6521 Filed 3–24–09; 8:45 am]

BILLING CODE 4510–FN–P

DEPARTMENT OF LABOR

Employment and Training Administration

[TA–W–65,500]

Plum Creek MDF, Inc., Central Services Division, Columbia Falls, MT, Notice of Termination of Investigation

Pursuant to Section 221 of the Trade Act of 1974, as amended, an investigation was initiated on March 5, 2009, in response to a worker petition filed by a company official on behalf of workers at Plum Creek MDF, Inc., Central Services Division, Columbia Falls, Montana.

The petitioner has requested that the petition be withdrawn. Consequently, the investigation has been terminated.

Signed at Washington, DC this 13th day of March 2009.

Linda G. Poole,

Certifying Officer, Division of Trade Adjustment Assistance.

[FR Doc. E9–6540 Filed 3–24–09; 8:45 am]

BILLING CODE 4510–FN–P

DEPARTMENT OF LABOR

Employment and Training Administration

[TA–W–65,374]

Rohm And Haas Company, LLC, West Alexandria, OH; Notice of Termination of Investigation

Pursuant to Section 221 of the Trade Act of 1974, as amended, an investigation was initiated on February 25, 2009, in response to a worker petition filed on behalf of workers at Rohm and Haas Company, LLC, West Alexandria, Ohio.

The petitioner has requested that the petition be withdrawn. Consequently, the investigation has been terminated.

Signed at Washington, DC this 13th day of March 2009.

Elliott S. Kushner,

Certifying Officer, Division of Trade Adjustment Assistance.

[FR Doc. E9–6531 Filed 3–24–09; 8:45 am]

BILLING CODE 4510–FN–P

DEPARTMENT OF LABOR

Employment and Training Administration

[TA–W–65,518]

Sunbury Textile Mills, Sunbury, PA; Notice of Termination of Investigation

Pursuant to Section 221 of the Trade Act of 1974, as amended, an investigation was initiated on March 9, 2009 in response to a petition filed on behalf of workers at Sunbury Textile Mills, Sunbury, Pennsylvania.

The petitioners have requested that the petition be withdrawn. Consequently, the investigation has been terminated.

Signed at Washington, DC, this 13th day of March 2009.

Richard Church,

Certifying Officer, Division of Trade Adjustment Assistance.

[FR Doc. E9–6541 Filed 3–24–09; 8:45 am]

BILLING CODE 4510–FN–P

DEPARTMENT OF LABOR

Employment and Training Administration

[TA–W–65,532]

Talbar, Inc., Meadville, PA; Notice of Termination of Investigation

Pursuant to Section 221 of the Trade Act of 1974, as amended, an investigation was initiated on March 10, 2009 in response to a worker petition filed by a company official on behalf of workers of Talbar, Inc., Meadville, Pennsylvania.

The petitioner has requested that the petition be withdrawn. Consequently, the investigation has been terminated.

Signed at Washington, DC, this 17th day of March 2009.

Richard Church,

Certifying Officer, Division of Trade Adjustment Assistance.

[FR Doc. E9–6542 Filed 3–24–09; 8:45 am]

BILLING CODE 4510–FN–P

DEPARTMENT OF LABOR

Employment and Training Administration

[TA–W–65,185]

Victor Insulators, Inc., Victor, NY; Notice of Termination of Investigation

In accordance with Section 221 of the Trade Act of 1974, as amended, an investigation was initiated on February 10, 2009 in response to a petition filed

by a company official on behalf of workers of Victor Insulators, Inc., Victor, New York.

The petitioner has requested that the petition be withdrawn. Consequently, the investigation has been terminated.

Signed in Washington, DC, this 17th day of March 2009.

Richard Church,

Certifying Officer, Division of Trade Adjustment Assistance.

[FR Doc. E9–6529 Filed 3–24–09; 8:45 am]

BILLING CODE 4510–FN–P

DEPARTMENT OF LABOR

Employment and Training Administration

[TA–W–65,424]

Vintage Verandah International Kalispell, MT; Notice of Termination of Investigation

Pursuant to Section 221 of the Trade Act of 1974, as amended, an investigation was initiated on February 27, 2009 in response to a worker petition filed by a company official on behalf of workers of Vintage Verandah International, Kalispell, Montana.

The petitioner has requested that the petition be withdrawn. Consequently, the investigation has been terminated.

Signed at Washington, DC this 13th day of March 2009.

Linda G. Poole,

Certifying Officer, Division of Trade Adjustment Assistance.

[FR Doc. E9–6533 Filed 3–24–09; 8:45 am]

BILLING CODE 4510–FN–P

DEPARTMENT OF LABOR

Employment and Training Administration

[TA–W–65,148]

W.Y. Shugart & Sons, Inc., Fort Payne, AL; Notice of Termination of Investigation

Pursuant to Section 221 of the Trade Act of 1974, as amended, an investigation was initiated on February 6, 2009 in response to a worker petition filed by a company official on behalf of workers of W.Y. Shugart & Sons, Inc., Fort Payne, Alabama.

The petitioner has requested that the petition be withdrawn. Consequently, the investigation has been terminated.

Signed at Washington, DC, this 13th day of March 2009.

Richard Church.

Certifying Officer, Division of Trade Adjustment Assistance.

[FR Doc. E9–6526 Filed 3–24–09; 8:45 am]

BILLING CODE 4510–FN–P

DEPARTMENT OF LABOR

Employment and Training Administration

[TA–W–65,033]

The Worthington Steel Company of Kentucky, LLC Louisville, KY; Notice of Termination of Investigation

Pursuant to Section 221 of the Trade Act of 1974, as amended, an investigation was initiated on January 29, 2009 in response to a petition filed by a company official on behalf of all workers at The Worthington Steel Company of Kentucky, LLC, Louisville, Kentucky.

The petitioner requested that the petition be withdrawn. Consequently, the investigation has been terminated.

Signed at Washington, DC, this 13th day of March 2009.

Richard Church,

Certifying Officer, Division of Trade Adjustment Assistance.

[FR Doc. E9–6519 Filed 3–24–09; 8:45 am]

BILLING CODE 4510–FN–P

DEPARTMENT OF LABOR

Employment and Training Administration

[TA–W–65,073]

Yorktowne, Inc., Mifflinburg, PA; Notice of Termination of Investigation

Pursuant to Section 221 of the Trade Act of 1974, as amended, an investigation was initiated on February 2, 2009 in response to a petition filed on behalf of all workers at Yorktowne, Inc., Mifflinburg, Pennsylvania.

The petitioners requested that the petition be withdrawn. Consequently, the investigation has been terminated.

Signed at Washington, DC, this 13th day of March 2009.

Richard Church,

Certifying Officer, Division of Trade Adjustment Assistance.

[FR Doc. E9–6523 Filed 3–24–09; 8:45 am]

BILLING CODE 4510–FN–P

DEPARTMENT OF LABOR

Bureau of Labor Statistics

Proposed Collection, Comment Request

ACTION: Notice.

SUMMARY: The Department of Labor, as part of its continuing effort to reduce paperwork and respondent burden, conducts a pre-clearance consultation program to provide the general public and Federal agencies with an opportunity to comment on proposed and/or continuing collections of information, in accordance with the Paperwork Reduction Act of 1995 (PRA95) [44 U.S.C. 3506(c)(2)(A)]. This program helps to ensure that requested data can be provided in the desired format, reporting burden (time and financial resources) is minimized, collection instruments are clearly understood, and the impact of collection requirements on respondents can be properly assessed. The Bureau of Labor Statistics (BLS) is soliciting comments on the proposed extension of the ''BLS Occupational Safety and Health Statistics (OSHS) Cooperative Agreement application package.'' A copy of the proposed information collection request (ICR) can be obtained by contacting the individual listed below in the **ADDRESSES** section of this notice.

DATES: Written comments must be submitted to the office listed in the **ADDRESSES** section of this notice on or before May 26, 2009.

ADDRESSES: Send comments to Carol Rowan, BLS Clearance Officer, Division of Management Systems, Bureau of Labor Statistics, Room 4080, 2 Massachusetts Avenue, NE., Washington, DC 20212, telephone number 202–691–7099. (This is not a toll free number.)

FOR FURTHER INFORMATION CONTACT: Carol Rowan, BLS Clearance Officer, telephone number 202–691–7099. (*See* **ADDRESSES** section.)

SUPPLEMENTARY INFORMATION:

I. Background

The Secretary of Labor has delegated to the BLS the authority to collect, compile, and analyze statistical data on work-related injuries and illnesses, as authorized by the Occupational Safety and Health Act of 1970 (Pub. L. 91–596). The Cooperative Agreement is the vehicle through which State Grant Agencies are awarded funds to assist them in operating OSHS cooperative statistical programs and is designed to allow the BLS to ensure conformance

with program objectives. The BLS has full authority over the financial operations of the statistical program. The BLS requires financial reporting that will produce the information that is needed to monitor the financial activities of the BLS Occupational Safety and Health Statistics grantees.

II. Current Action

The BLS requests clearance for the generic OSHS Cooperative Agreement from the Office of Management and Budget. The BLS is requesting an extension to the existing clearance for the OSHS Cooperative Agreement package.

III. Desired Focus of Comments

The BLS is particularly interested in comments that:

- Evaluate whether the proposed collection of information is necessary for the proper performance of the functions of the agency, including whether the information will have practical utility.
- Evaluate the accuracy of the agency's estimate of the burden of the proposed collection of information, including the validity of the methodology and assumptions used.
- Enhance the quality, utility, and clarity of the information to be collected.
- Minimize the burden of the collection of information on those who are to respond, including through the use of appropriate automated, electronic, mechanical, or other technological collection techniques or other forms of information technology, e.g., permitting electronic submissions of responses.

Type of Review: Extension of a currently approved collection.

Agency: Bureau of Labor Statistics.

Title: BLS Occupational Safety and Health Statistics Cooperative Agreement Application Package.

OMB Number: 1220–0149.

Affected Public: State Governments.

Frequency: Quarterly, Annually.

Forms	Total respondents	Frequency	Average burden		Estimated total burden (hours)
			Per response (hours)	Annually (hours)	
BLS–OSHS Work Statements	58	1	2	2	116
BLS–OSHS2	58	4	1	4	232
Total	58	5	3	6	348

Total Burden Cost (capital/startup): $0.

Total Burden Cost (operating/maintenance): $0.

Comments submitted in response to this notice will be summarized and/or included in the request for Office of Management and Budget approval of the information collection request; they also will become a matter of public record.

Signed at Washington, DC, this 19th day of March 2009.

Kimberley D. Hill,

Acting Chief, Division of Management Systems, Bureau of Labor Statistics.

[FR Doc. E9–6546 Filed 3–24–09; 8:45 am]

BILLING CODE 4510–24–P

NATIONAL ARCHIVES AND RECORDS ADMINISTRATION

Records Schedules; Availability and Request for Comments

AGENCY: National Archives and Records Administration (NARA).

ACTION: Notice of availability of proposed records schedules; request for comments.

SUMMARY: The National Archives and Records Administration (NARA) publishes notice at least once monthly of certain Federal agency requests for records disposition authority (records schedules). Once approved by NARA, records schedules provide mandatory instructions on what happens to records when no longer needed for current Government business. They authorize the preservation of records of continuing value in the National Archives of the United States and the destruction, after a specified period, of records lacking administrative, legal, research, or other value. Notice is published for records schedules in which agencies propose to destroy records not previously authorized for disposal or reduce the retention period of records already authorized for disposal. NARA invites public comments on such records schedules, as required by 44 U.S.C. 3303a(a).

DATES: Requests for copies must be received in writing on or before April 24, 2009. Once the appraisal of the records is completed, NARA will send a copy of the schedule. NARA staff usually prepare appraisal memorandums that contain additional information concerning the records covered by a proposed schedule. These, too, may be requested and will be provided once the appraisal is completed. Requesters will be given 30 days to submit comments.

ADDRESSES: You may request a copy of any records schedule identified in this notice by contacting the Life Cycle Management Division (NWML) using one of the following means:

Mail: NARA (NWML), 8601 Adelphi Road, College Park, MD 20740–6001.

E-mail: request.schedule@nara.gov.

Fax: 301–837–3698.

Requesters must cite the control number, which appears in parentheses after the name of the agency which submitted the schedule, and must provide a mailing address. Those who desire appraisal reports should so indicate in their request.

FOR FURTHER INFORMATION CONTACT: Laurence Brewer, Director, Life Cycle Management Division (NWML), National Archives and Records Administration, 8601 Adelphi Road, College Park, MD 20740–6001. *Telephone:* 301–837–1539. *E-mail: records.mgt@nara.gov.*

SUPPLEMENTARY INFORMATION: Each year Federal agencies create billions of records on paper, film, magnetic tape, and other media. To control this accumulation, agency records managers prepare schedules proposing retention periods for records and submit these schedules for NARA's approval, using the Standard Form (SF) 115, Request for Records Disposition Authority. These schedules provide for the timely transfer into the National Archives of historically valuable records and authorize the disposal of all other records after the agency no longer needs them to conduct its business. Some schedules are comprehensive and cover all the records of an agency or one of its major subdivisions. Most schedules, however, cover records of only one office or program or a few series of records. Many of these update previously approved schedules, and some include records proposed as permanent.

The schedules listed in this notice are media neutral unless specified otherwise. An item in a schedule is media neutral when the disposition instructions may be applied to records regardless of the medium in which the records are created and maintained. Items included in schedules submitted to NARA on or after December 17, 2007, are media neutral unless the item is limited to a specific medium. (*See* 36 CFR 1228.24(b)(3).)

No Federal records are authorized for destruction without the approval of the Archivist of the United States. This approval is granted only after a thorough consideration of their administrative use by the agency of origin, the rights of the Government and of private persons directly affected by the Government's activities, and whether or not they have historical or other value.

Besides identifying the Federal agencies and any subdivisions requesting disposition authority, this public notice lists the organizational unit(s) accumulating the records or indicates agency-wide applicability in the case of schedules that cover records that may be accumulated throughout an agency. This notice provides the control number assigned to each schedule, the total number of schedule items, and the number of temporary items (the records proposed for destruction). It also includes a brief description of the temporary records. The records schedule itself contains a full description of the records at the file unit level as well as their disposition. If NARA staff has prepared an appraisal memorandum for the schedule, it too includes information about the records. Further information about the disposition process is available on request.

Schedules Pending

1. Department of the Army, Agency-wide (N1–AU–09–3, 2 items, 2 temporary items). Master files and outputs of an electronic information system that contains enlisted promotion eligibility data such as date of birth, social security number, time in service, expiration of service, and misconduct indicators.

2. Department of Homeland Security, Office of Cyber Security and Communications (N1–563–08–30, 8 items, 5 temporary items). Files accumulated by attendees of International Telecommunications Union meetings, non-significant telecommunication interoperability case studies, and technical assessments of communication technologies. Proposed for permanent retention are significant telecommunication interoperability case studies, the National Communications Capabilities Report, and the National Emergency Communications Plan.

3. Department of Homeland Security, U.S. Secret Service (N1–87–09–3, 7 items, 7 temporary items). Records relating to accreditation matters accumulated by the agency's James J. Rowley Training Center.

4. Department of Homeland Security, U.S. Secret Service (N1–87–09–4, 3 items, 3 temporary items). Records associated with an electronic information system used to report breaches in proprietary information. Included are master files, litigation records, and duplicate data stored on an external server.

5. Department of Housing and Urban Development, Office of General Counsel (N1–207–09–5, 1 item, 1 temporary item). Master files of the Enterprise Tracking System, an electronic information system used to create, track, and process regulations, directives, dockets, and cases throughout the agency.

6. Department of Justice, Federal Bureau of Investigation (N1–65–07–17, 2 items, 2 temporary items). Metadata and data files associated with an electronic information system used to manage the scanning of agency records. This schedule does not cover the imaged records, which are maintained by the requesting unit.

7. Department of the Treasury, Internal Revenue Service (N1–58–09–1, 1 item, 1 temporary item). Forms used in connection with assisting in the resolution of taxpayer problems.

8. Department of the Treasury, Internal Revenue Service (N1–58–09–4, 1 item, 1 temporary item). Forms submitted by taxpayers in order for expatriation or termination of residency to be effective for tax purposes.

9. Department of the Treasury, Internal Revenue Service (N1–58–09–5, 2 items, 2 temporary items). Master files and outputs of an electronic information system to control and monitor flow-through entities and linked investor returns.

10. Department of the Treasury, Internal Revenue Service (N1–58–09–6, 2 items, 2 temporary items). Fraud case files and related records accumulated by the Small Business/Self Employed Business Unit.

11. Department of the Treasury, Internal Revenue Service (N1–58–09–10, 1 item, 1 temporary item). Records relating to the examination of retirement plans.

12. Broadcasting Board of Governors, Office of the General Counsel (N1–517–09–1, 5 items, 2 temporary items). General legal files and files relating to non-precedential litigation. Proposed for permanent retention are files relating to litigation cases and other legal matters that establish precedents and international agreement background files.

13. Environmental Protection Agency, Agency-wide (N1–412–08–14, 1 item, 1 temporary item). Quality assurance records, including collections of laboratory standard operating procedures used to implement and assess environmental measurement activities. Excluded are quality assurance records that are part of specific project or research files covered by other records disposition schedules.

14. Environmental Protection Agency, Agency-wide (N1–412–08–15, 2 items, 2 temporary items). Electronic data and data standards documentation used to improve the quality of environmental data and facilitate data integration.

15. Environmental Protection Agency, Office of Air and Radiation (N1–412–09–2, 1 item, 1 temporary item). Electronic data in a clearinghouse containing summaries of Federal air pollution control regulations as well as State, local, and regional air pollution control permits.

16. Nuclear Regulatory Commission, Office of Federal and State Materials and Environmental Management Programs (N1–431–08–2, 1 item, 1 temporary item). Electronic records that contain information concerning sealed source devices and the individuals and organizations holding licenses to maintain such devices.

17. Nuclear Regulatory Commission, Office of Federal and State Materials and Environmental Management Programs (N1–431–08–12, 3 items, 3 temporary items). Master files and outputs of an electronic information system that tracks licenses for byproduct, source, and special nuclear materials for applications other than nuclear reactors.

18. Southwestern Power Administration, Agency-wide (N1–387–09–1, 256 items, 203 temporary items). Comprehensive schedule covering all administrative and program areas including administrative management and support, budgeting, financial management, information technology, rates and repayment, environmental safety and health, security, power maintenance, engineering and planning, power operations, and public affairs. Included are records relating to such subjects as cash management, cost allocation, power accounting, tax reporting, travel, year 2000 computer systems policy and planning, plant accounting, environmental monitoring,

waste water discharge, security system maintenance, transmission line maintenance, power operations reporting, customer associations, and power billing invoicing. Proposed for permanent retention are such records as biographical data for high-level officials, legal opinions, power repayment studies, budget policy files, records relating to cleanup of hazardous waste sites, environmental impact statements, archaeological records, emergency management and planning files, agency histories, rate history documents, and hydroelectric power planning and operations records.

Dated: March 20, 2009.

Michael J. Kurtz,

Assistant Archivist for Records Services—Washington, DC.

[FR Doc. E9–6758 Filed 3–24–09; 8:45 am]

BILLING CODE 7515–01–P

NATIONAL CREDIT UNION ADMINISTRATION

Sunshine Act; Notice of Agency Meeting

TIME AND DATE: 11:30 a.m., Thursday, March 26, 2009.

PLACE: Board Room, 7th Floor, Room 7047, 1775 Duke Street, Alexandria, VA 22314–3428.

STATUS: Closed.

MATTERS TO BE CONSIDERED:

1. Consideration of supervisory activities. Closed pursuant to Exemptions (9)(A)(ii) and (B).
2. Consideration of Proposed Legislation. Closed pursuant to Exemptions (9)(A)(ii) and (B).

FOR FURTHER INFORMATION CONTACT: Mary Rupp, Secretary of the Board, *Telephone:* 703–518–6304.

Mary Rupp,

Board Secretary.

[FR Doc. E9–6738 Filed 3–23–09; 11:15 am]

BILLING CODE 7535–01–P

NATIONAL FOUNDATION ON THE ARTS AND HUMANITIES

National Endowment for the Arts; Submission of OMB Review: Comment Request

The National Endowment for the Arts (NEA) has submitted the following public information collection request (ICR) to the Office of Management and Budget (OMB) for review and approval in accordance with the Paperwork Reduction Act of 1995 [Pub. L. 104–13, 44 U.S.C. Chapter 35]. Copies of the ICR, with applicable supporting documentation, may be obtained by contacting Angelia Richardson via telephone at 202–682–5454 (this is not a toll-free number) or e-mail at *richarda@arts.gov*. Individuals who use a telecommunications device for the deaf (TTY/TDD) may call 202–682–5496 between 10 a.m. and 4 p.m. Eastern time, Monday through Friday.

Comments should be sent to the Office of Information and Regulatory Affairs, Attn: OMB Desk Officer for the National Endowment for the Arts, Office of Management and Budget, Room 10235, Washington, DC 20503, 202–395–7316, within 30 days from the date of this publication in the **Federal Register**.

The Office of Management and Budget (OMB) is particularly interested in comments which:

- Evaluate whether the proposed collection of information is necessary for the proper performance of the functions of the agency, including whether the information will have practical utility;
- Evaluate the accuracy of the agency's estimate of the burden of the proposed collection of information including the validity of the methodology and assumptions used;
- Enhance the quality, utility, and clarity of the information to be collected; and
- Minimize the burden of the collection of information on those who are to respond, including through the use of appropriate automated, electronic, mechanical, or other technological collection techniques, or other forms of information technology, *e.g.*, permitting electronic submission of responses.

Agency: National Endowment for the Arts.

Title: Section 504 Self-Evaluation Workbook.

OMB Number: 3135–0101/ Reinstatement.

Frequency: Annually.

Affected Public: Nonprofit organizations, state and local arts agencies.

Estimated Number of Respondents: 2,200.

Estimated Time per Respondent: Four (4) hours.

Total Burden Hours: 8,800.

Total Annualized Capital/Startup Costs: 0.

Total Annual Costs (Operating/ Maintaining Systems or Purchasing Services): 0.

Description: The collection of this information is required of recipients of Federal financial assistance to comply with the Administrative requirements of Section 504 of the Rehabilitation Act of 1973, as amended. Completion of a self-evaluation is specifically addressed in CFR Title 45, Subpart D, subsection 1151.42. The Arts Endowment plans to make available to our grantees the Section 504 Self-Evaluation Workbook to assist them in evaluating the accessibility of their programs, activities, policies and practices to insure compliance with the 504 regulations.

ADDRESSES: Angelia Richardson, National Endowment for the Arts, 1100 Pennsylvania Avenue, NW., Room 219, Washington, DC 20506–0001, telephone (202) 682–5454 (this is not a toll-free number), fax (202) 682–5553.

Kathleen Edwards,

Support Services Supervisor, Administrative Services,National Endowment for the Arts.

[FR Doc. E9–6560 Filed 3–24–09; 8:45 am]

BILLING CODE 7537–01–P

NATIONAL FOUNDATION ON THE ARTS AND HUMANITIES

National Endowment for the Arts

Submission of OMB Review: Comment Request

The National Endowment for the Arts (NEA) has submitted the following public information collection request (ICR) to the Office of Management and Budget (OMB) for review and approval in accordance with the Paperwork Reduction Act of 1995 [Pub. L. 104–13, 44 U.S.C. Chapter 35]. Copies of the ICR, with applicable supporting documentation, may be obtained by contacting Angelia Richardson via telephone at 202–682–5454 (this is not a toll-free number) or e-mail at *richarda@arts.gov.* Individuals who use a telecommunications device for the deaf (TTY/TDD) may call 202–682–5496 between 10 a.m. and 4 p.m. Eastern time, Monday through Friday.

Comments should be sent to the Office of Information and Regulatory Affairs, Attn: OMB Desk Officer for the National Endowment for the Arts, Office of Management and Budget, Room 10235, Washington, DC 20503, 202–395–7316, within 30 days from the date of this publication in the **Federal Register**.

The Office of Management and Budget (OMB) is particularly interested in comments which:

- Evaluate whether the proposed collection of information is necessary for the proper performance of the functions of the agency, including whether the information will have practical utility;

• Evaluate the accuracy of the agency's estimate of the burden of the proposed collection of information including the validity of the methodology and assumptions used;

• Enhance the quality, utility, and clarity of the information to be collected; and

• Minimize the burden of the collection of information on those who are to respond, including through the use of appropriate automated, electronic, mechanical, or other technological collection techniques, or other forms of information technology, *e.g.*, permitting electronic submission of responses.

Agency: National Endowment for the Arts.

Title: Section 504 Self-Evaluation Workbook.

OMB Number: 3135–0101/ Reinstatement.

Frequency: Annually.

Affected Public: Nonprofit organizations, state and local arts agencies.

Estimated Number of Respondents: 2,200.

Estimated Time per Respondent: Four (4) hours.

Total Burden Hours: 8,800.

Total Annualized Capital/Startup Costs: 0.

Total Annual Costs (Operating/ Maintaining Systems or Purchasing Services): 0.

Description: The collection of this information is required of recipients of Federal financial assistance to comply with the Administrative requirements of Section 504 of the Rehabilitation Act of 1973, as amended. Completion of a self-evaluation is specifically addressed in CFR Title 45, Subpart D, subsection 1151.42. The Arts Endowment plans to make available to our grantees the Section 504 Self-Evaluation Workbook to assist them in evaluating the accessibility of their programs, activities, policies and practices to insure compliance with the 504 regulations.

Addresses: Angelia Richardson, National Endowment for the Arts, 1100 Pennsylvania Avenue, NW., Room 219, Washington, DC 20506–0001, telephone (202) 682–5454 (this is not a toll-free number), fax (202) 682–5553.

Kathleen Edwards,

Support Services Supervisor, Administrative Services,National Endowment for the Arts.

[FR Doc. E9–6562 Filed 3–24–09; 8:45 am]

BILLING CODE 7537–01–P

NATIONAL SCIENCE FOUNDATION (NSF)

National Science Board Committee on Programs and Plans; Sunshine Act Meetings

The National Science Board's Committee on Programs and Plans, pursuant to NSF regulations (45 CFR part 614), the National Science Foundation Act, as amended (42 U.S.C. 1862n–5), and the Government in the Sunshine Act (5 U.S.C. 552b), hereby gives notice in regard to the scheduling of meetings for the transaction of National Science Board business and other matters specified, as follows:

DATE AND TIME: Monday, March 30, 2009 at 1 p.m.

SUBJECT MATTER: To make recommendations on award actions.

STATUS: Closed.

This meeting will be held by teleconference originating at the National Science Board Office, National Science Foundation, 4201 Wilson Blvd., Arlington, VA 22230. Please refer to the National Science Board Web site (*http://www.nsf.gov/nsb*) for information or schedule updates, or *contact:* Elizabeth Strickland, National Science Foundation, 4201 Wilson Blvd., Arlington, VA 22230. *Telephone:* (703) 292–7000.

Ann Ferrante,

Writer-Editor.

[FR Doc. E9–6559 Filed 3–24–09; 8:45 am]

BILLING CODE 7555–01–P

NATIONAL SCIENCE FOUNDATION (NSF)

National Science Board Executive Committee; Sunshine Act Meetings

The National Science Board's Executive Committee, pursuant to NSF regulations (45 CFR Part 614), the National Science Foundation Act, as amended (42 U.S.C. 1862n–5), and the Government in the Sunshine Act (5 U.S.C. 552b), hereby gives notice in regard to the scheduling of meetings for the transaction of National Science Board business and other matters specified, as follows:

DATE AND TIME: Tuesday, March 31, 2009 at 12:30 p.m.

SUBJECT MATTER: To make recommendations on award actions.

STATUS: Closed.

This meeting will be held by teleconference originating at the National Science Board Office, National Science Foundation, 4201 Wilson Blvd., Arlington, VA 22230. Please refer to the National Science Board Web site (*http://www.nsf.gov/nsb*) for information or schedule updates, or *contact*: Clifford Gabriel, National Science Foundation, 4201 Wilson Blvd., Arlington, VA 22230. *Telephone*: (703) 292–7571.

Ann Ferrante,

Writer-Editor.

[FR Doc. E9–6561 Filed 3–24–09; 8:45 am]

BILLING CODE 7555–01–P

NUCLEAR REGULATORY COMMISSION

[NRC–2009–0137]

Draft Regulatory Guide: Issuance, Availability

AGENCY: Nuclear Regulatory Commission.

ACTION: Notice of Issuance and Availability of Draft Regulatory Guide, DG–1218.

FOR FURTHER INFORMATION CONTACT: Steven A. Laur, U.S. Nuclear Regulatory Commission, Washington, DC 20555–0001, *telephone:* (301) 415–2889 or e-mail to *Steven.Laur@nrc.gov*.

SUPPLEMENTARY INFORMATION:

I. Introduction

The U.S. Nuclear Regulatory Commission (NRC) is issuing for public comment a draft guide in the agency's ''Regulatory Guide'' series. This series was developed to describe and make available to the public such information as methods that are acceptable to the NRC staff for implementing specific parts of the NRC's regulations, techniques that the staff uses in evaluating specific problems or postulated accidents, and data that the staff needs in its review of applications for permits and licenses.

The draft regulatory guide (DG), titled, ''Risk-Informed, Performance-Based Fire Protection for Existing Light-Water Nuclear Power Plants,'' is temporarily identified by its task number, DG–1218, which should be mentioned in all related correspondence. DG–1218 is the proposed Revision 1 of Regulatory Guide 1.205.

DG–1218 provides guidance for use in complying with the requirements that the NRC has promulgated for risk-informed, performance-based fire protection programs (FPPs) that comply with Title 10, section 50.48(c), of the Code of Federal Regulations (10 CFR 50.48(c)) and the referenced 2001 Edition of the National Fire Protection Association (NFPA) standard, NFPA

805, ''Performance-Based Standard for Fire Protection for Light-Water Reactor Electric Generating Plants.''

In accordance with 10 CFR 50.48(a), each operating nuclear power plant must have an FPP that satisfies General Design Criterion (GDC) 3, ''Fire Protection,'' of Appendix A, ''General Design Criteria for Nuclear Power Plants,'' to 10 CFR part 50, ''Domestic Licensing of Production and Utilization Facilities.'' In addition, plants that were licensed to operate before January 1, 1979, must meet the requirements of Appendix R, ''Fire Protection Program for Nuclear Power Facilities Operating Prior to January 1, 1979,'' to 10 CFR part 50, except to the extent provided for in 10 CFR 50.48(b). Plants licensed to operate after January 1, 1979, are required to comply with 10 CFR 50.48(a), as well as any plant-specific fire protection license conditions and technical specifications.

II. Further Information

The NRC staff is soliciting comments on DG–1218. Comments may be accompanied by relevant information or supporting data and should mention DG–1218 in the subject line. Comments submitted in writing or in electronic form will be made available to the public in their entirety through the NRC's Agencywide Documents Access and Management System (ADAMS).

Personal information will not be removed from your comments. You may submit comments by any of the following methods:

1. *Mail comments to:* Chief, Rulemaking and Directives Branch, MS TWB–05–B01M, Office of Administration, U.S. Nuclear Regulatory Commission, Washington, DC 20555–0001.

2. *Fax comments to:* Chief, Rulemaking and Directives Branch, Office of Administration, U.S. Nuclear Regulatory Commission at (301) 492–3446.

Requests for technical information about DG–1218 may be directed to the NRC contact, Steven Laur at (301) 415–2889 or e-mail to *Steven.Laur@nrc.gov*.

Comments would be most helpful if received by May 22, 2009. Comments received after that date will be considered if it is practical to do so, but the NRC is able to ensure consideration only for comments received on or before this date. Although a time limit is given, comments and suggestions in connection with items for inclusion in guides currently being developed or improvements in all published guides are encouraged at any time.

Electronic copies of DG–1218 are available through the NRC's public Web site under Draft Regulatory Guides in the ''Regulatory Guides'' collection of the NRC's Electronic Reading Room at *http://www.nrc.gov/reading-rm/doc-collections/*. Electronic copies are also available in ADAMS (*http://www.nrc.gov/reading-rm/adams.html*), under Accession No. ML090420462.

In addition, regulatory guides are available for inspection at the NRC's Public Document Room (PDR), which is located at 11555 Rockville Pike, Rockville, Maryland. The PDR's mailing address is USNRC PDR, Washington, DC 20555–0001. The PDR can also be reached by telephone at (301) 415–4737 or (800) 397–4205, by fax at (301) 415–3548, and by e-mail to *pdr.resource@nrc.gov*.

Regulatory guides are not copyrighted, and Commission approval is not required to reproduce them.

Dated at Rockville, Maryland, this 16th day of March, 2009.

For the Nuclear Regulatory Commission.

Andrea D. Valentin,

Chief, Regulatory Guide Development Branch, Division of Engineering, Office of Nuclear Regulatory Research.

[FR Doc. E9–6553 Filed 3–24–09; 8:45 am]

BILLING CODE 7590–01–P

NUCLEAR REGULATORY COMMISSION

[Docket No. 030–33266; NRC–2009–0130]

Notice of Environmental Assessment Related to the Issuance of a License Amendment To Terminate Byproduct Materials License No. 21–26519–01, for Aastrom Biosciences, Ann Arbor, MI

AGENCY: Nuclear Regulatory Commission.

ACTION: Issuance of Environmental Assessment and Finding of No Significant Impact for License Amendment.

FOR FURTHER INFORMATION CONTACT: Samuel J. Mulay, Health Physicist, Materials Control, ISFSI, and Decommissioning Branch, Division of Nuclear Materials Safety, Region III, U.S. Nuclear Regulatory Commission, 2443 Warrenville Road, Lisle, Illinois 60532; telephone: (630) 829–9837.

SUPPLEMENTARY INFORMATION:

I. Introduction

The U.S. Nuclear Regulatory Commission (NRC) is considering the issuance of an amendment to terminate NRC Byproduct Materials License No. 21–26519–01, which is held by Aastrom Biosciences (licensee). The issuance of the amendment would authorize the unrestricted release of the licensee's facility located at 24 Frank Lloyd Wright Drive, Lobby K, Domino's Farm, Ann Arbor, Michigan (the Facility).

The NRC has prepared an Environmental Assessment (EA) in support of this proposed action in accordance with the requirements of Title 10, Code of Federal Regulations (CFR), part 51 (10 CFR part 51). Based on the EA, the NRC has concluded that a Finding of No Significant Impact (FONSI) is appropriate with respect to the proposed action. The amendment will be issued to the licensee following the publication of this FONSI and EA in the **Federal Register**.

II. Environmental Assessment

Identification of Proposed Action

The proposed action would approve the licensee's termination amendment request dated September 30, 2008, (ML090210643), and approve release of the Facility for unrestricted use in accordance with 10 CFR part 20, subpart E. The licensee operated a research laboratory in a 20,000 square foot leased space. License No. 21–26519–01 was issued on September 10, 1993, pursuant to 10 CFR part 30, and has been amended periodically since that time. This license authorized the use of unsealed byproduct materials for conducting a variety of research and development applications on laboratory bench tops and in hoods. The Facility is located in a mixed residential, agricultural and commercial area, and a former authorized location of use there was previously released by the NRC for unrestricted use. The licensee ceased licensed activities in April 2007 and Lobby K was used to store standard sources and a cell harvester. The licensee did not perform research activities involving licensed material in Lobby K. Based on the Licensee's historical knowledge of the site and the conditions of the facility, the licensee determined that only routine decontamination activities, in accordance with their NRC approved, operating radiation safety procedures, were required. The licensee was not required to submit a decommissioning plan to the NRC because worker cleanup activities and procedures are consistent with those approved for routine operations. The licensee submitted a license termination request in a letter dated September 30, 2008, (ML090210643). The licensee submitted a final status survey report to the NRC on October 31, 2008, (ML083080216), and additional correspondence dated February 11, 2009, (ML090500353), which demonstrates that the Lobby K

facility meets the criteria in subpart E of 10 CFR part 20 for unrestricted use.

Need for the Proposed Action

The Licensee has ceased conducting licensed activities at the Facility and seeks the unrestricted use of the Facility.

Environmental Impacts of the Proposed Action

The historical review of licensed research activities performed by the licensee at the Facility determined that the activities involved primarily the use of hydrogen-3, which has a half-life greater than 120 days.

The licensee's final status survey report was attached to the Licensee's letter dated October 31, 2008, (ML083080216). The licensee's report indicated that the final status survey of its Facility was completed on October 1, 2008. Additional correspondence was submitted in a letter dated February 11, 2009, (ML090500353) to clarify and support information provided in the final status survey report.

The licensee elected to demonstrate compliance with the radiological criteria for unrestricted release as specified in 10 CFR 20.1402 by using the screening approach described in NUREG–1757, ''Consolidated Decommissioning Guidance,'' Volume 2. The Licensee used the radionuclide-specific derived concentration guideline levels (DCGLs), developed there by the NRC, which comply with the dose criterion in 10 CFR 20.1402. These DCGLs define the maximum amount of residual radioactivity on building surfaces, equipment, and materials, and in soils, that will satisfy the NRC requirements in subpart E of 10 CFR part 20 for unrestricted release. The Licensee's final status survey results were below these DCGLs and are in compliance with the As Low As Reasonably Achievable (ALARA) requirement of 10 CFR 20.1402. The NRC thus finds that the Licensee's final status survey results are acceptable.

Based on its review, the staff has determined that the affected environment and any environmental impacts associated with the proposed action are bounded by the impacts evaluated by the ''Generic Environmental Impact Statement in Support of Rulemaking on Radiological Criteria for License Termination of NRC–Licensed Nuclear Facilities'' (NUREG–1496) Volumes 1–3 (ML042310492, ML042320379, and ML042330385). The staff finds there were no significant environmental impacts from the use of radioactive material at the Facility. The NRC staff reviewed the docket file records and the final status survey report to identify any non-radiological hazards that may have impacted the environment surrounding the Facility. No such hazards or impacts to the environment were identified. The NRC has identified no other radiological or non-radiological activities in the area that could result in cumulative environmental impacts.

The NRC staff finds that the proposed release of the Facility for unrestricted use is in compliance with 10 CFR 20.1402. Based on its review, the staff considered the impact of the residual radioactivity at the Facility and concluded that the proposed action will not have a significant effect on the quality of the human environment.

Environmental Impacts of the Alternatives to the Proposed Action

Due to the largely administrative nature of the proposed action, its environmental impacts are small. Therefore, the only alternative the staff considered is the no-action alternative, under which the staff would leave things as they are by simply denying the amendment request. This no-action alternative is not feasible because it conflicts with 10 CFR 30.36(d) requiring that decommissioning of byproduct material facilities be completed and approved by the NRC after licensed activities cease. The NRC's analysis of the licensee's final status survey data and additional, supporting documentation confirmed that the Facility meets the requirements of 10 CFR 20.1402 for unrestricted release. Additionally, denying the amendment request would result in no change in current environmental impacts. The environmental impacts of the proposed action and the no-action alternative are therefore similar, and the no-action alternative is accordingly not further considered.

Conclusion

The NRC staff has concluded that the proposed action is consistent with the NRC's unrestricted release criteria specified in 10 CFR 20.1402. Because the proposed action will not significantly impact the quality of the human environment, the NRC staff concludes that the proposed action is the preferred alternative.

Agencies and Persons Consulted

On February 4, 2009, the NRC provided a draft of this EA to the State of Michigan, Radioactive Material and Medical Waste Materials Unit, Waste and Hazardous Materials Division, Michigan Department of Environmental Quality. The State responded by e-mail on February 4, 2009, and agreed with the conclusions of the EA, and otherwise had no comments.

The NRC staff has determined that the proposed action is of a procedural nature, and will not affect listed species or critical habitat. Therefore, no further consultation is required under section 7 of the Endangered Species Act. The NRC staff also determined that the proposed action is not the type of activity that has the potential to cause effects on historic properties. Therefore, no further consultation is required under section 106 of the National Historic Preservation Act.

III. Finding of No Significant Impact

The NRC staff has prepared this EA in support of the proposed action. On the basis of this EA, the NRC finds that there are no significant environmental impacts from the proposed action, and that preparation of an environmental impact statement is not warranted. Accordingly, the NRC has determined that a Finding of No Significant Impact is appropriate.

IV. Further Information

Documents related to this action, including the application for license amendment and supporting documentation, are available electronically at the NRC's Electronic Reading Room at *http://www.nrc.gov/reading-rm/adams.html*. From this site, you can access the NRC's Agencywide Documents Access and Management System (ADAMS), which provides text and image files of NRC's public documents. The documents related to this action are listed below, along with their ADAMS accession numbers.

1. Bradley J. Martin, PhD., Aastrom Biosciences, letter to U.S. Nuclear Regulatory Commission, Region III, dated September 30, 2008, (ADAMS Accession No. ML090210643).
2. Bradley J. Martin, PhD., Aastrom Biosciences, letter dated October 31, 2008, with the attached final status survey to U.S. Nuclear Regulatory Commission, Region III, (ADAMS Accession No. ML083080216).
3. Bradley J. Martin, PhD., Aastrom Biosciences, letter to the U.S. Nuclear Regulatory Commission, Region III, dated February 11, 2009, (ADAMS Accession No. ML090500353).
4. Title 10 Code of Federal Regulations, part 20, subpart E, ''Radiological Criteria for License Termination'';
5. Title 10 Code of Federal Regulations, part 51, ''Environmental Protection Regulations for Domestic Licensing and Related Regulatory Functions'';

6. NUREG–1496, ''Generic Environmental Impact Statement in Support of Rulemaking on Radiological Criteria for License Termination of NRC-Licensed Nuclear Facilities'';

7. NUREG–1757, Consolidated Decommissioning Guidance.

If you do not have access to ADAMS, or if there are problems in accessing the documents located in ADAMS, contact the NRC Public Document Room (PDR) Reference staff at 1–800–397–4209, 301–415–4737, or by e-mail to *pdr@nrc.gov*. These documents may also be viewed electronically on the public computers located at the NRC's PDR, O 1 F21, One White Flint North, 11555 Rockville Pike, Rockville, MD 20852. The PDR reproduction contractor will copy documents for a fee.

Dated at Lisle, Illinois, this 13th day of March 2009.

For the Nuclear Regulatory Commission.

Christine A. Lipa,

Chief, Materials Control, ISFSI, and Decommissioning Branch, Division of Nuclear Materials Safety, Region III.

[FR Doc. E9–6399 Filed 3–24–09; 8:45 am]

BILLING CODE 7590–01–P

NUCLEAR REGULATORY COMMISSION

[Docket No. 52–033–COL; ASLBP No. 09–880–05–COL–BD01]

Detroit Edison Company; Establishment of Atomic Safety and Licensing Board

Pursuant to delegation by the Commission dated December 29, 1972, published in the **Federal Register**, 37 FR 28,710 (1972), and the Commission's regulations, *see* 10 CFR 2.104, 2.300, 2.303, 2.309, 2.311, 2.318, and 2.321, notice is hereby given that an Atomic Safety and Licensing Board (Board) is being established to preside over the following proceeding:

Detroit Edison Company

(Fermi Nuclear Power Plant, Unit 3)

This proceeding concerns a Petition to Intervene and Request for Hearing dated March 9, 2009 from Beyond Nuclear, *et al.*, that was submitted in response to a January 8, 2009 Notice of Hearing and Opportunity to Petition for Leave to Intervene on a Combined License for the Fermi Nuclear Power Plant, Unit 3 (74 FR 836). The petitioners challenge the application filed by Detroit Edison Company pursuant to Subpart C of 10 CFR Part 52 for a combined license for Fermi Nuclear Power Plant, Unit 3, which would be located in Monroe County, Michigan.

The Board is comprised of the following administrative judges:

Ronald M. Spritzer, Chair, Atomic Safety and Licensing Board Panel, U.S. Nuclear Regulatory Commission, Washington, DC 20555–0001.

Michael F. Kennedy, Atomic Safety and Licensing Board Panel, U.S. Nuclear Regulatory Commission, Washington, DC 20555–0001.

Randall J. Charbeneau, Atomic Safety and Licensing Board Panel, U.S. Nuclear Regulatory Commission, Washington, DC 20555–0001.

All correspondence, documents, and other materials shall be filed in accordance with the NRC E-Filing rule, which the NRC promulgated in August 2007 (72 FR 49,139).

Issued at Rockville, Maryland, this 19th day of March 2009.

E. Roy Hawkens,

Chief Administrative Judge,Atomic Safety and Licensing Board Panel.

[FR Doc. E9–6555 Filed 3–24–09; 8:45 am]

BILLING CODE 7590–01–P

OVERSEAS PRIVATE INVESTMENT CORPORATION

April 7, 2009 Annual Public Hearing

Time and Date: Tuesday, April 7, 2009, 2 p.m.

Place: Offices of the Corporation, Twelfth Floor Board Room, 1100 New York Avenue, NW., Washington, DC.

Status: Hearing open to the Public at 2 p.m.

Purpose: Annual Public Hearing to afford an opportunity for any person to present views regarding the activities of the Corporation.

Procedures:

Individuals wishing to make address the hearing orally must provide advance notice to OPIC's Corporate Secretary no later than 5 p.m., Thursday, April 2, 2009. The notice must include the individual's name, organization, address and telephone number, and a concise summary of the subject matter to be presented.

Oral presentations may not exceed ten (10) minutes. The time for individual presentations may be reduced proportionately, if necessary, to afford all participants who have submitted a timely request to participate an opportunity to be heard.

Participants wishing to submit a written statement for the record must submit a copy of such statement to OPIC's Corporate Secretary no later than 5 p.m., Thursday, April 2, 2009. Such statements must be typewritten, double-spaced and may not exceed twenty-five (25) pages.

Upon receipt of the required notice, OPIC will prepare an agenda for the hearing identifying speakers, setting forth the subject on which each participant will speak, and the time allotted for each presentation. The agenda will be available at the hearing.

A written summary of the hearing will be compiled, and such summary will be made available, upon written request to OPIC's Corporate Secretary, at the cost of reproduction.

Contact Person for Information: Information on the hearing may be obtained from Connie M. Downs at (202) 336–8438, via facsimile at (202) 408–0136, or via e-mail at *connie.downs@opic.gov.*

Supplementary Information: OPIC is a U.S. Government agency that provides, on a commercial basis, political risk insurance and financing in friendly developing countries and emerging democracies for environmentally sound projects that confer positive developmental benefits upon the project country while creating employment in the U.S. OPIC is required by section 231A(c) of the Foreign Assistance Act of 1961, as amended (the ''Act'') to hold at least one public hearing each year.

Dated: March 20, 2009.

Connie M. Downs,

OPIC Corporate Secretary.

[FR Doc. E9–6582 Filed 3–24–09; 8:45 am]

BILLING CODE 3210–01–P

SECURITIES AND EXCHANGE COMMISSION

[Release No. 34–59599; File No. SR–FINRA–2008–020]

Self-Regulatory Organizations; Financial Industry Regulatory Authority, Inc.; Order Approving Proposed Rule Change, as Modified by Amendment No. 2 Thereto, Relating to Private Placements of Securities Issued by Members

March 19, 2009.

I. Introduction

The Financial Industry Regulatory Authority, Inc. (''FINRA'') (f/k/a National Association of Securities Dealers, Inc. (''NASD'')) filed with the Securities and Exchange Commission (''Commission'' or ''SEC'') on September 11, 2008, and amended on January 7, 2009,[1] pursuant to Section 19(b)(1) of

[1] Amendment No. 2 to SR–FINRA–2008–020. This amendment replaced and superseded the

Continued

the Securities Exchange Act of 1934 (''Exchange Act'' or ''Act'')[2] and Rule 19b–4 thereunder,[3] a proposal to adopt new FINRA Rule 5122 (''Rule'') which would prohibit FINRA members or associated persons from offering or selling any security in a ''Member Private Offerings'' unless certain conditions have been met. This proposal was published for comment in the **Federal Register** on January 26, 2009.[4] The Commission received two comments on the proposal.[5] This order approves this proposed rule change.

II. Description of the Proposed Rule Change

FINRA proposed to adopt new FINRA Rule 5122, which would require a member that engages in a private placement of unregistered securities issued by the member or a control entity to (1) disclose to investors in a private placement memorandum, term sheet or other offering document the intended use of offering proceeds and the offering expenses, (2) file such offering document with FINRA, and (3) commit that at least 85 percent of the offering proceeds will be used for business purposes, which shall not include offering costs, discounts, commissions and any other cash or non-cash sales incentives.

A. Background

FINRA proposed the Rule in response to problems identified in connection with private placements by members of their own securities or those of a control entity (referred to as ''Member Private Offerings'' or ''MPOs''). In recent years, FINRA has investigated and brought numerous enforcement cases concerning abuses in connection with MPOs.[6] Among the allegations in these cases were that members failed to provide written offering documents to investors or provided offering documents that contained misleading, incorrect, or selective disclosure, such as omissions and misrepresentations regarding selling compensation and the use of offering proceeds. In addition, as part of its examination program, FINRA conducted a non-public sweep of firms that had engaged in MPOs and found widespread problems. The MPO sweep revealed that in some cases, offering proceeds were used for individual bonuses, sales contest awards, commissions in excess of 20 percent, or other undisclosed compensation.

Because MPOs are private placements, they are not subject to existing FINRA rules governing underwriting terms and arrangements and conflicts of interest by members in public offerings.[7] This proposed rule change is intended to provide investor protections for MPOs that are similar to the protections provided by NASD Rule 2720 for public offerings by members.[8]

In response to concerns about MPOs, FINRA issued Notice to Members 07–27 (''NTM 07–27'') in June 2007 to solicit comment on a proposed new rule regarding MPOs (then numbered proposed NASD Rule 2721). FINRA received sixteen comment letters in response to NTM 07–27.[9] These comments were varied. Some of these commenters expressed support for the intent of the proposed rule but voiced concerns about its breadth and scope,[10] while others questioned the benefit or necessity of the proposed rule.[11] Most of these comment letters also suggested edits to the proposed rule.[12] These comments received in response to NTM 07–27, and changes to the Rule as proposed as compared to the rule as it appeared in NTM 07–27, are described in more detail below in Sections II.B through II.F.

B. Definitions

The proposed rule change states that no member or associated person may offer or sell any security in a MPO unless certain conditions are met. The proposed rule change defines a MPO as ''a private placement of unregistered securities issued by a member or control entity.'' The proposed rule further defines two of the terms in the definition of MPO, ''private placement'' and ''control entity.'' In response to one comment received in response to NTM 07–27,[13] FINRA defined the term ''private placement'' to be ''a non-public offering of securities conducted in reliance on an available exemption from registration under the Securities Act [of 1933].''

original filing submitted to the SEC on September 11, 2008. Amendment No. 1, which was filed on December 22, 2008, was withdrawn on January 7, 2009.

[2] 15 U.S.C. 78s(b)(1).

[3] 17 CFR 240.19b–4.

[4] Exchange Act Release No. 59262 (January 16, 2009), 74 FR 4487 (January 26, 2009) (SR–FINRA–2008–020).

[5] *See* letter from Neville Golvala for ChoiceTrade dated February 7, 2009 (''2009 ChoiceTrade letter'') and letter from Jack L. Hollander for the Investment Program Association (''IPA'') dated February 17, 2009 (''IPA letter'').

[6] *Franklin Ross, Inc.*, NASD No. E072004001501 (settled April 2006), summarized in *NASD Notice Disciplinary Actions*, p. 1 (May 2006); *Capital Growth Financial, LLC*, NASD No. E072003099001 (settled February 2006), summarized in *NASD Notice Disciplinary Actions*, p. 1 (April 2006); *Craig & Associates*, NASD No. E3B2003026801 (settled August 2005), summarized in *NASD Notice Disciplinary Actions*, p. D6 (October 2005); *Online Brokerage Services, Inc.*, NASD No. C8A050021 (settled March 2005), summarized in *NASD Notice Disciplinary Actions*, p. D5 (May 2005); *IAR Securities/Legend Merchant Group*, NASD No. C10030058 (settled July 2004), summarized in *NASD Notice Disciplinary Actions*, p. D1 (July 2004); *Shelman Securities Corp.*, NASD No. C06030013 (settled December 2003), summarized in *NASD Notice Disciplinary Actions*, p. D1 (February 2004); *Neil Brooks*, NASD No. C06030009 (settled June 2003), summarized in NASD Press Release, NASD Files Three Enforcement Actions for Fraudulent Hedge Fund Offerings (August 18, 2003); *Dep't of Enforcement v. L.H. Ross & Co., Inc.*, Complaint No. CAF040056 (Hearing Panel decision January 15, 2005); *Dep't of Enforcement v. Win Capital Corp.*, Complaint No. CLI030013 (Hearing Panel decision August 6, 2004). In addition to these cases, FINRA has numerous ongoing investigations involving MPOs.

[7] FINRA Rule 5110 and NASD Rules 2720 and 2810 govern member participation in public offerings of securities.

[8] Members would remain subject to other FINRA rules that govern a member's participation in the offer and sale of a security, including FINRA Rules 2010 and 2020 and NASD Rule 2310. Members also are subject to the anti-fraud provisions of the Federal securities laws, including Sections 10(b), 11, 12 and 17 of the Exchange Act.

[9] The following is a list of persons and entities submitting comment letters in response to NTM 07–27: Letter from Timothy P. Selby for Alston & Bird LLP dated July 20, 2007 (''Alston & Bird letter''), letter from Keith F. Higgins for American Bar Association (''ABA'') Committee on Federal Regulation of Securities dated July 20, 2007 (''ABA letter''), letter from Todd Anders dated July 13, 2007 (''Anders letter''), letter from Neville Golvala for ChoiceTrade dated July 19, 2007 (''2007 ChoiceTrade letter''), letter from Stephen E. Roth, et al of Sutherland, Asbill & Brennan, LLP for the Committee of Annuity Insurers (''CAI'') dated July 20, 2007 (''CAI letter''), letter from Peter J Chepucavage for the International Association of Small Broker-Dealers and Advisors (''IASBDA'') dated July 20, 2007 (''IASBDA letter''), letter from Alan Z. Engel for LEC Investment Corp. dated June 14, 2007 (''LEC letter''), letter from Daniel T. McHugh for Lombard Securities Inc. dated July 20, 2007 (''Lombard letter''), letter from Dexter M. Johnson for Mallon & Johnson, P.C. dated July 19, 2007 (''Mallon & Johnson letter''), letter from John G. Gaine for Managed Funds Association (''MFA'') dated July 20, 2007 (''MFA letter''), letter from Curtis N. Sorrells for MGL Consulting Corp. dated July 20, 2007 (''MGL letter''), letter from Thomas W. Sexton for the National Futures Association (''NFA'') dated July 20, 2007 (''NFA letter''), letter from Michael S. Sackheim and David A. Form for the New York City Bar Committee of Futures and Derivatives Regulation Distribution Co. dated July 19, 2007 (''PFG letter''), letter from Mary Kuan for Securities Industry and Financial Markets Association (''SIFMA'') dated July 27, 2007 (''SIFMA letter''), and letter from Bill Keisler for Stephens Inc. dated July 20, 2007 (''Stephens letter'').

[10] *See* MFA letter, CAI letter, and Alston & Bird letter.

[11] *See* Anders letter, Mallon & Johnson letter, 2007 ChoiceTrade letter, ABA letter, and SIFMA letter. FINRA did not agree with SIFMA that the potential for abuses in connection with private offerings by non-members is a reason to abandon the proposed rule change. The FINRA staff believed that offerings by members raise unique conflicts that require the protections of the proposed rule change. FINRA also disagreed with SIFMA's contention that they do not have legal authority to adopt the proposed rule change.

[12] *See* Alston & Bird letter, ABA letter, LEC letter, Mallon & Johnson letter, MFA letter, MGL letter, PFG letter, and SIFMA letter.

[13] *See* ABA letter and SIFMA letter.

The proposed rule change defines the term ''control entity'' as ''any entity that controls or is under common control with a member, or that is controlled by a member or its associated persons.'' The term ''control'' is defined as ''a beneficial interest, as defined in Rule 5130(i)(1), of more than 50 percent of the outstanding voting securities of a corporation, or the right to more than 50 percent of the distributable profits or losses of a partnership or other non-corporate legal entity.'' [14] The power to direct the management or policies of a corporation or partnership alone (*e.g.*, a general partner), absent meeting the majority ownership or right to the majority of profits, would not constitute ''control'' as defined in proposed FINRA Rule 5122. For purposes of this definition, FINRA clarified that entities may calculate the percentage of control using a ''flow through'' concept, by looking through ownership levels to calculate the total percentage of control. For example, if broker-dealer ABC owns 50 percent of corporation DEF that in turn holds a 60 percent interest in corporation GHI, and ABC is engaged in a private offering of GHI, ABC would have a 30 percent interest in GHI (50 percent of 60 percent), and thus GHI would not be considered a control entity under this definition.

FINRA also reaffirmed, as stated in NTM 07–27, that performance and management fees earned by a general partner would not be included in the determination of partnership profit or loss percentages. However, if such performance and management fees are subsequently re-invested in the partnership, thereby increasing the general partner's ownership interest, then such interests would be considered in determining whether the partnership is a control entity.

In response to several comments received in response to NTM 07–27 advocating that the timing for determining control take place at the conclusion rather than the commencement of an offering,[15] FINRA revised the definition of control to be determined immediately after the closing of an offering. The definition also clarifies that, in the case of multiple closings, control will be determined immediately after each closing. If an offering is intended to raise sufficient funds such that the member would not control the entity under the control standard, but fails to raise sufficient funds, the member must promptly come into compliance with the Rule, including providing the required disclosures to investors and filings with FINRA's Corporate Financing Department (''Department'').

C. Disclosure Requirements

The proposed rule change would require that a member provide a written offering document to each prospective investor in an MPO, whether accredited or not, and that the offering document disclose the intended use of offering proceeds as well as offering expenses and selling compensation.[16] If the offering has a private placement memorandum or term sheet, then such memorandum or term sheet must be provided to each prospective investor and must contain these disclosures. If the offering does not have a private placement memorandum or term sheet, then the member must prepare an offering document that discloses the intended use of offering proceeds as well as offering expenses and selling compensation. FINRA clarified that the Rule is not meant to require a particular form of disclosure, however. To emphasize this point, FINRA proposed to issue Supplemental Material 5122.01, which would note that nothing in the Rule shall require a member to prepare a private placement memorandum that meets the additional requirements of Rule 502 under the Securities Act of 1933 (''Securities Act'').

FINRA believed that every investor in an MPO should receive basic information concerning the offering. FINRA also believed that none of the disclosures required in the proposed rule change would conflict with requirements under Federal or State securities laws.[17]

In response to comments received in response to NTM 07–27,[18] the proposed rule change eliminates the previously proposed requirements to disclose risk factors and ''any other information necessary to ensure that required information is not misleading.'' One commenter at the time was concerned that requiring disclosure of these items could lead to an inconsistent scheme of regulation in interpreting the application of the Federal securities laws to private placements if FINRA's expectation of what should be disclosed differed from the expectations of the SEC and the courts.[19]While FINRA omitted these disclosures from the proposed rule change, they specifically requested comment on their decision to exclude such disclosures.[20]

D. Filing Requirements

The proposed rule change would require that a member file a private placement memorandum, term sheet, or other offering document with the Department at or prior to the first time such document is provided to any prospective investor. Any amendments or exhibits to the offering document also must be filed by the member with the Department within ten days of being provided to any investor or prospective investor. The filing requirement is intended to allow the Department to identify those offering documents that are deficient ''on their face'' from the other requirements of the proposed rule change. Notably, the filing requirement in the proposed rule change differs from that in Rule 5110 (Corporate Financing Rule) in that the Department would not review the offering and issue a ''no-objections'' letter before a member may commence the offering.

FINRA affirmed, in response to concerns raised in comment letters received in response to NTM 07–27,[21] that information filed with the Department pursuant to proposed FINRA Rule 5122 would be subject to confidential treatment. FINRA included a provision in the proposed rule change explicitly clarifying this position.[22] FINRA has stated that the Department plans to develop a Web-based filing system that would allow for the filing to be deemed filed upon submission.[23] In addition, the proposed rule change would not impose any additional requirements regarding filing of advertisements or sales materials, which

[14] FINRA added language regarding ''other non-corporate legal entities'' based on commenters' suggestions to clarify that control would extend to entities other than corporations or partnerships. *See* ABA letter and SIFMA letter.

[15] *See* Alston & Bird letter, ABA letter, LEC letter, MFA letter, MGL letter, NYC Bar letter, and SIFMA letter.

[16] Given that FINRA is not imposing limits on selling compensation as it does in other rules, they did not believe it was necessary to provide a detailed definition of ''selling compensation'' as urged by SIFMA. FINRA believed that the term ''selling compensation'' for purposes of a disclosure requirement is sufficiently clear.

[17] *See* SIFMA letter.

[18] ?????

[19] *See* ABA letter.

[20] Exchange Act Release No. 59262 (January 16, 2009), 74 FR 4487 (January 26, 2009).

[21] *See* ABA letter, Mallon & Johnson letter, and SIFMA letter.

[22] *See* proposed 5122(d). This confidential treatment provision is similar to that provided in FINRA Rule 5110(b)(3).

[23] As noted *supra*, and in NTM 07–27, neither FINRA nor the Department would issue a ''no objections opinion'' regarding any offering document filed with the Department. However, FINRA has stated that if it subsequently determined that disclosures in the offering document appeared to be incomplete, inaccurate or misleading, they could make further inquiries. The filing requirement also could facilitate the creation of a confidential Department database on MPO activity that would be used in connection with the member examination process.

would continue to be governed by NASD Rule 2210.[24]

One commenter responding to NTM 07–27 suggested that a member's filing of Form D pursuant to Securities Act Regulation D should provide sufficient information to FINRA.[25] FINRA staff disagreed. For example, FINRA noted that the information in Form D does not include information on a wide variety of expenses or applications of proceeds, nor does Form D require that such information is contained in the offering documents.

E. Use of Offering Proceeds

Proposed Rule 5122(b)(3) would require that each time an MPO is closed at least 85 percent of the offering proceeds raised be used for business purposes, which would not include offering costs, discounts, commissions, or any other cash or non-cash sales incentives. The use of offering proceeds also must be consistent with the disclosures to investors, as described above. This requirement was created to address the abuses where members or control entities used substantial amounts of offering proceeds for selling compensation and related party benefits, rather than business purposes. The proposed rule change does not limit the total amount of underwriting compensation. Rather, under the proposed rule change, offering and other expenses of the MPO could exceed a value greater than 15 percent of the offering proceeds, but no more than 15 percent of the money raised from investors in the private placement could be used to pay these expenses. FINRA noted that the 15 percent figure is consistent with the limitation of offering fees and expenses, including compensation, in NASD Rule 2810 and the North American Securities Administrators Association guidelines with respect to public offerings subject to State regulation.

Some commenters responding to NTM 07–27 expressed concern that the 85 percent limit was arbitrary or unnecessary,[26] and should be reduced or eliminated to allow flexibility for management in MPOs.[27] FINRA believed that when a member engages in a private placement of its own securities or those of a control entity, investors should be assured that, at a minimum, 85 percent of the proceeds of the offering are dedicated to business purposes. FINRA recognized that changing the business purpose or use of proceeds in an offering may in some instances benefit investors and reminded members that the member may change its use of proceeds, provided it makes appropriate disclosure to investors and files the amended offering document with the Department.

One commenter responding to NTM 07–27 requested that, when an issuer plans a series of MPOs, the issuer should be allowed to calculate the 85 percent limit at the end of the series.[28] FINRA believed, however, that the limit should apply to each MPO in order to assure investors that at least 85 percent of each offering in a series is dedicated to the business purposes described in that offering's offering document. As a result, FINRA clarified that the 85 percent limit applies to each MPO.

F. Proposed Exemptions

Proposed Rule 5122 would include a number of exemptions for sales to institutional purchasers because FINRA's findings did not reveal abuse vis-à-vis such purchasers, who are generally sophisticated and able to conduct appropriate due diligence prior to making an investment. Specifically, the proposed Rule would exempt MPOs sold solely to the following:

- Institutional accounts, as defined in NASD Rule 3110(c)(4);
- Qualified purchasers, as defined in Section 2(a)(51)(A) of the Investment Company Act;
- Qualified institutional buyers, as defined in Securities Act Rule 144A;
- Investment companies, as defined in Section 3 of the Investment Company Act;
- An entity composed exclusively of qualified institutional buyers, as defined in Securities Act Rule 144A; and
- Banks, as defined in Section 3(a)(2) of the Securities Act.

In addition, the proposed rule change excludes the following types of offerings, which do not raise the concerns identified in the sweep or enforcement actions:

- Offerings of exempted securities, as defined by Section 3(a)(12) of the Exchange Act;
- Offerings made pursuant to Securities Act Rule 144A or SEC Regulation S;
- Offerings in which a member acts primarily in a wholesaling capacity (*i.e.*, it intends, as evidenced by a selling agreement, to sell through its affiliate broker-dealers, less than 20% of the securities in the offering);
- Offerings of exempted securities with short term maturities under Section 3(a)(3) of the Securities Act;
- Offerings of subordinated loans under Exchange Act Rule 15c3–1, Appendix D;[29]
- Offerings of ''variable contracts,'' as defined in NASD Rule 2820(b)(2);
- Offerings of modified guaranteed annuity contracts and modified guaranteed life insurance policies, as referred to in FINRA Rule 5110(b)(8)(E);
- Offerings of securities of a commodity pool operated by a commodity pool operator, as defined under Section 1a(5) of the Commodity Exchange Act;
- Offerings of equity and credit derivatives, including over-the-counter (''OTC'') options, provided that the derivative is not based principally on the member or any of its control entities; and
- Offerings filed with the Department under FINRA Rule 5110 or NASD Rules 2720 or 2810.

Finally, the proposed rule change also would exempt MPOs in which investors would be expected to have access to sufficient information about the issuer and its securities in addition to the information provided by the member conducting the MPO. These exemptions include:

- Offerings of unregistered investment grade rated debt and preferred securities;
- Offerings to employees and affiliates of the issuer or its control entities; and
- Offerings of securities issued in conversions, stock splits and restructuring transactions executed by an already existing investor without the need for additional consideration or investments on the part of the investor.

This list of exemptions is largely based on the exemptions previously proposed in NTM 07–27, with a few additions and clarifications in response to comments.[30] FINRA clarified that exempted securities, as defined by Section 3(a)(12) of the Exchange Act, would not be subject to the Rule.[31] In

[24] *See* NYC Bar letter and SIFMA letter.

[25] *See* Mallon & Johnson letter.

[26] *See* IASBDA letter, Mallon & Johnson letter, ABA letter, and SIFMA letter.

[27] *See* IASBDA letter, Mallon & Johnson letter, and ABA letter.

[28] *See* NYC Bar letter.

[29] Members' offerings of subordinated loans are subject to an alternative disclosure regime. In 2002, the SEC approved a rule change to require, as part of a subordination agreement, the execution of a Subordination Agreement Investor Disclosure Document. *See* Exchange Act Release No. 45954 (May 17, 2002), 67 FR 36281 (May 23, 2002); *see also Notice to Members* 02–32 (June 2002).

[30] *See* Lombard letter, ABA letter, MGL letter, NYC Bar letter, MFA letter, NFA letter, Alston & Bird letter, Anders letter, PFG letter, CAI letter, 2007 ChoiceTrade letter, Mallon & Johnson letter, and SIFMA letter.

[31] Accordingly, FINRA noted that in connection with this proposed Rule, they do not plan to recommend amending NASD Rule 0116 or the List of NASD Conduct Rules and Interpretive Materials that apply to Exempted Securities. *See* CAI letter.

addition, FINRA proposed an exemption for commodity pools in view of the oversight and regulation performed by the NFA and the Commodity Futures Trading Commission.[32] FINRA also clarified that variable contracts and other life insurance products would be excluded,[33] because the offer and sale of these types of offerings are already subject to existing FINRA rules.[34] FINRA also proposed an exemption for member private offerings that are filed with the Department under FINRA Rule 5110 or NASD Rules 2720 or 2810.

In addition, FINRA clarified aspects of other previously proposed exemptions. FINRA clarified that their intent regarding the exemption for wholesalers is to provide an exemption for those that do not primarily engage in direct selling to investors.[35] FINRA also clarified that offerings of securities issued in conversions, stock splits, and restructuring transactions that are executed by an already-existing investor without the need for additional consideration or investment on the part of the investor would be exempt.[36]

FINRA also noted that equity and credit derivatives, such as OTC options, would be exempt, provided that the derivative is not based principally on the member or any of its control entities.[37] As a technical matter, the issuer of an equity or credit derivative is the member firm, and thus would make such offering an MPO. However, where the security offered is not based principally on the member or any of its control entities (*e.g.*, an OTC option on Microsoft Corporation), FINRA does not believe such sale should be subject to the provisions of the proposed rule change. On the other hand, if the derivative is based principally on the member or a control entity (*e.g.*, an OTC option overlying the member), then the sale of such security should be treated as an MPO and subject to the requirements of the proposed rule change.

Finally, FINRA clarified that the exemption for employees and affiliates of issuers would apply to employees and affiliates of control entities as well, because these persons are expected to have access to a level of information about the securities of the issuer similar to employees and affiliates of the issuer itself.[38]

Based on the comment letters received in response to NTM 07–27,[39] FINRA also reconsidered whether offerings to accredited investors should be exempt. However, FINRA continued to believe that an exemption for offerings made to accredited investors would not be in the public interest due to the generally low thresholds for meeting the definition of the term ''accredited investor.'' FINRA noted that the SEC has recently proposed clarifying and modernizing its ''accredited investor'' standard.[40]

Additionally, FINRA believed that financial products offered by a public reporting company,[41] an investment fund,[42] or a State or Federal bank affiliate of a FINRA member,[43] should not be excluded based solely on their status as a reporting company, a fund, or a bank. FINRA's belief was that, as a general matter, exemptions are best tailored based on the type of securities offered or the type (and sophistication) of the purchaser rather than the type of offeror. FINRA also declined to exempt offerings that contribute below a specified level of a member's net worth (*e.g.*, 5%), to create a categorical exemption for all exempted securities under Section 3(a) of the Securities Act, or to expand the exemption for securities with short term maturities under Section 3(a)(3) of the Securities Act to include all securities with a maturity of nine months or less.[44] As a practical matter, however, many of these products would be exempt because they meet one of the other exemptions enumerated in the Rule.

III. Comment Letters

The Commission received two comment letters in response to the proposed rule change.[45] The Commission also received FINRA's response to comments.[46] One letter voiced serious objections to the Rule,[47] while the other raised issues relating to the scope of the Rule.[48] The specific comments from these two letters, as well as FINRA's response to these comments, are discussed in detail below.

One commenter stated that FINRA did not have jurisdiction to adopt the Rule.[49] FINRA found no basis in this allegation because they believe that the Rule is consistent with Section 15A(b)(6) of the Exchange Act and that the proposed rule change will provide important investor protections. FINRA also points out that the Rule, by its terms, would apply to members and their associated persons in connection with the offer and sale of a specific type of security offering.

Both commenters argued that the requirements of the proposed rule change as applied to control entities of a member are overly broad. One commenter argued that the Rule would affect private placements by control entities that are not members which should not be part of the proposal.[50] The other commenter argued that FINRA did not have jurisdiction over control entities that are not broker-dealers.[51] FINRA disagreed with the commenters, stating that it has narrowly tailored the Rule to apply only in those instances where it believes oversight is warranted. For example, the definition of ''control'' in the Rule was limited to situations where the member owns more than 50% of the shares or distributable profits of the entity, where control has been found elsewhere at as little as 10%. Further, FINRA asserts that the Rule is designed to address conflicts attendant to private offerings by the member and its control entities. FINRA does not believe that this conflict is any less relevant when the capital is not being raised directly for the member's business purpose.

One commenter argued that FINRA should issue no-objection letters or otherwise demarcate the end of their review process.[52] FINRA responded that the purpose of their review is to find filings that are deficient on their face, and thus does not intend to engage in an extended review as it does in other situations. FINRA did note that the filed documents may be utilized in the member examination process.

Both commenters raised objections to the imposition of a limit on offering expenses. FINRA disagrees with the commenters and believes that the limits placed on members in the Rule are warranted based on the abuses FINRA has found. They believe that investors should be assured that in the case where

[32] *See* NYC Bar letter, MFA letter, NFA letter, Alston & Bird letter, and SIFMA letter.

[33] *See* CAI letter and PFG letter.

[34] *See, e.g.*, NASD Rule 2820.

[35] *See* MGL letter and SIFMA letter.

[36] *See* Mallon & Johnson letter.

[37] *See* SIFMA letter.

[38] *See* Stephens letter; *see also* Lombard letter.

[39] *See* 2007 ChoiceTrade letter, PFG letter, and SIFMA letter.

[40] *See, e.g.*, Securities Act Release No. 8828 (Aug. 3, 2007), 72 FR 45116 (Aug. 10, 2007); Securities Act Release No. 8766 (Dec. 27, 2006), 72 FR 400 (Jan. 4, 2007).

[41] *See* ABA letter and SIFMA letter.

[42] *See* MFA letter.

[43] *See* Anders letter and ABA letter.

[44] *See* SIFMA letter.

[45] *Supra* note 5.

[46] Letter from Stan Macel, FINRA, dated March 9, 2009.

[47] 2009 ChoiceTrade Letter.

[48] IPA Letter.

[49] 2009 ChoiceTrade Letter.

[50] IPA letter.

[51] 2009 ChoiceTrade letter. *See also supra* for FINRA's response to the jurisdictional question.

[52] IPA letter.

members are placing their own or a control entity's securities. They also point out that some limits are already in place via other rules or guidelines.

NTM 07–27 required additional disclosures beyond what was proposed by FINRA to the Commission, but FINRA requested specific comment as to whether those additional disclosures should be put back into the Rule.[53] Only one commenter addressed this question, but did support FINRA's decision to remove these additional disclosures.[54]

One commenter objected to limiting the requirement of filing the offering document with FINRA to FINRA members only.[55] FINRA responded that private offerings by members raise unique conflicts that necessitate the Rule. Further, that there is potential for abuse in private offerings by non-members is not a rationale for abandoning the proposal.

One commenter challenged FINRA's ability to keep the documents submitted to them confidential in spite of the promise of confidential treatment in proposed Rule 5122(d).[56] FINRA strongly disagreed with this assessment. This commenter also argued that there were insufficient occurrences of disconcerting behavior by members to warrant a rule, asserted that the Rule required a private placement memorandum and objected to a new requirement to do so, argued that the anti-fraud rules were sufficient to address the behavior FINRA was concerned with, objected to the filing requirement generally, objected to making the offering document available for the member examination process, argued that accredited investors should be excepted from the Rule, and argued that the Rule was an over-reaction to the findings cited by FINRA in the proposal.[57]

IV. Discussion and Findings

After careful review of the proposed rule change, the comments, and FINRA's response to the comments, the Commission finds that the proposed rule change is consistent with the requirements of the Act, and the rules and regulations thereunder that are applicable to a national securities association.[58] In particular, the Commission believes that the proposed rule change is consistent with the provisions of Section 15A(b)(6) of the Act,[59] which requires, among other things, that FINRA rules be designed to prevent fraudulent and manipulative acts and practices, to promote just and equitable principles of trade, and, in general, to protect investors and the public interest. The Commission believes that FINRA is seeking to protect investors and the public interest as a result of numerous findings of disconcerting behavior by its members in connection with MPOs. The Commission also believes that FINRA has tailored the Rule to prohibit members or associated persons from offering or selling securities in certain MPOs in order to ensure that investors are protected from such abusive conduct with minimal disruption on capital formation. The Commission notes that, as explained in the supplementary material to the Rule, nothing in the Rule shall require a member to prepare a private placement memorandum that meets the additional requirements of Securities Act Rule 502.

V. Conclusion

It is therefore ordered, pursuant to Section 19(b)(2) of the Act,[60] that the proposed rule change (File No. SR–FINRA–2008–020), as modified by Amendment No. 2, be, and hereby is, approved.

For the Commission, by the Division of Trading and Markets, pursuant to delegated authority.[61]

Florence E. Harmon,

Deputy Secretary.

[FR Doc. E9–6466 Filed 3–24–09; 8:45 am]

BILLING CODE 8010–01–P

[53] Exchange Act Release No. 59262 (January 16, 2009), 74 FR 4487 (January 26, 2009). *See also supra* Section II.C.

[54] IPA letter.

[55] 2009 ChoiceTrade letter.

[56] *Id.*

[57] *Id.*

[58] In approving this proposal, the Commission has considered the proposed rule's impact on efficiency, competition, and capital formation. *See* 15 U.S.C. 78c(f).

[59] 15 U.S.C. 78o–3(b)(6).

[60] 15 U.S.C. 78s(b)(2).

[61] 17 CFR 200.30–3(a)(12).

SECURITIES AND EXCHANGE COMMISSION

[Release No. 34–59597; File No. SR–NYSEArca-2009–03]

Self-Regulatory Organizations; NYSE Arca, Inc.; Order Approving Proposed Rule Change To Establish a Technical Original Listing Fee Specific to Derivative Securities Products and Structured Products

March 18, 2009.

I. Introduction

On January 23, 2009, NYSE Arca, Inc. (''NYSE Arca'' or ''Exchange'') filed with the Securities and Exchange Commission (''Commission''), pursuant to Section 19(b)(1) of the Securities Exchange Act of 1934 (''Act'')[1] and Rule 19b–4 thereunder,[2] a proposed rule change to amend its rules governing NYSE Arca, LLC, which is the equities trading facility of NYSE Arca Equities, to adopt a technical original listing fee applicable specifically to Derivative Securities Products and Structured Products. Additionally, the Exchange is removing from the NYSE Arca Schedule of Fees and Charges, a reference to a fee waiver that was applicable only in 2007. The proposed rule change was published in the **Federal Register** on February 11, 2009.[3] The Commission received no comments on the proposal. This order approves the proposed rule change.

II. Description of the Proposal

The Exchange proposes adopting a technical original listing fee of $2,500 specifically for Derivative Securities Products and Structured Products.[4] Derivative Securities Products and Structured Products[5] are currently subject to the Exchange's existing technical original listing fee of $5,000, which is applicable to all listed securities, except for closed-end funds. A technical original listing would occur as a result of a change in state of incorporation, reincorporation under the laws of the same state, reverse split stocks, recapitalization, creation of a holding company or new company by operation of law or through an exchange offer, or similar events affecting the nature of a listed security. The fee applies if the change in the company's status is technical in nature and the shareholders of the original company receive or retain a share-for-share interest in the new company without any change in their position in the issuer's capital structure or rights.

The Exchange further proposes a non-substantive change by removing Footnote 8 to the NYSE Arca Schedule of Fees and Charges, waiving a fee that was applicable only in 2007 and thus no longer relevant.

[1] 15 U.S.C. 78s(b)(1).

[2] 17 CFR 240.19b–4.

[3] *See* Securities Exchange Act Release No. 59364 (February 5, 2009), 74 FR 6941 (hereinafter referred to as ''Notice'').

[4] The $2,500 fee may include multiple issues of securities from the same issuer on the same application.

[5] Derivative Securities Products and Structured Products are defined in the NYSE Arca Schedule of Fees and Charges at notes 3 and 4. *See* also Notice, *supra* note 3. The definitions include all Derivative Securities Products and Structured Products traded on NYSE Arca Equities.

III. Discussion and Commission's Findings

After careful review, the Commission finds that the proposed rule change is consistent with the requirements of the Act and the rules and regulations thereunder applicable to a national securities exchange. Specifically, the Commission finds that the proposal is consistent with Section 6(b)(4) of the Act,[6] which requires, among other things, that the rules of an exchange provide for the equitable allocation of reasonable dues, fees, and other charges among its members and issuers and other persons using its facilities. The Commission also finds that the proposal is consistent with Section 6(b)(5) of the Act,[7] that an exchange have rules that are designed to remove impediments to and perfect the mechanism of a free and open market and a national market system, and are not designed to permit unfair discrimination between issuers.

According to the Exchange, the existing $5,000 fee is unsuitable for Derivative Securities Products and Structured Products, because it is disproportionate in relation to the initial and continued listing fees for those securities.[8] According to the Exchange, a $2,500 fee is more consistent with the pricing expectations of issuers for those securities. Accordingly, the Commission believes that the Exchange's proposed fee is reasonable, given that it will be applied consistently to all listed securities in those classes and is consistent with the Exchange's overall approach to pricing for Derivative Securities Products and Structured Products.

Moreover, the Commission believes that charging a one time $2,500 application fee for multiple issues of securities on a single application is appropriate in light of the general fee structure for such products. The Commission notes that the single fee for multiple issues of securities applies equally to all Derivative Securities Products and Structured Products. Finally, the Commission also believes that it is appropriate to delete an obsolete reference to a fee waiver that expired in 2007.

For the foregoing reasons, the Commission agrees that the proposed rule change does not constitute an inequitable allocation of reasonable dues, fees and other charges and does not permit unfair discrimination between issuers, and is generally consistent with the Act.[9]

IV. Conclusion

It is therefore ordered, pursuant to Section 19(b)(2) of the Act,[10] that the proposed rule change (SR–NYSEArca-2009–03) be, and it hereby is, approved.

For the Commission, by the Division of Trading and Markets, pursuant to delegated authority.[11]

Florence E. Harmon,

Deputy Secretary.

[FR Doc. E9–6464 Filed 3–24–09; 8:45 am]

BILLING CODE 8010–01–P

[6] 15 U.S.C. 78f(b)(4).

[7] 15 U.S.C. 78f(b)(5).

[8] *See* Notice, *supra* note 3.

[9] 15 U.S.C. 78f(b)(4). In approving the proposed rule change, the Commission has considered the proposed rule's impact in efficiency, competition and capital formation. *See* 15 U.S.C. 78c(f).

[10] 15 U.S.C. 78s(b)(2).

[11] 17 CFR 200.30–3(a)(12).

SECURITIES AND EXCHANGE COMMISSION

[Release No. 34–59598; File No. SR–NYSEArca–2009–05]

Self-Regulatory Organizations; NYSE Arca, Inc.; Order Approving Proposed Rule Change To Establish Fees for NYSE Arca Trades

March 18, 2009.

I. Introduction

On January 21, 2009, NYSE Arca, Inc. (''NYSE Arca'' or ''Exchange'') filed with the Securities and Exchange Commission (''Commission''), pursuant to Section 19(b)(1) of the Securities Exchange Act of 1934 (''Act'') [1] and Rule 19b–4 thereunder,[2] a proposed rule change to introduce its NYSE Arca Trades service, a NYSE Arca-only market data service that allows a vendor to redistribute on a real-time basis the same last sale information that NYSE Arca reports to the Consolidated Tape Association (''CTA'') for inclusion in the CTA's consolidated data stream and certain other related data elements (''NYSE Arca Last Sale Information''), and to establish fees for that service. The proposed rule change was published for comment in the **Federal Register** on February 3, 2009.[3] The Commission received no comment letters on the proposal. This order approves the proposed rule change.

II. Description of the Proposal

The Exchange proposes to introduce NYSE Arca Trades, a new service pursuant to which it will allow vendors, broker-dealers, and others (''NYSE Arca-Only Vendors'') to make available NYSE Arca Last Sale Information on a real-time basis. NYSE Arca Last Sale Information would include last sale information for all securities that are traded on the Exchange. The Exchange will make NYSE Arca Last Sale Information available through its new NYSE Arca Trades service at the same time as it provides last sale information to the processor under the CTA Plan. In addition to the information that the Exchange provides to CTA, NYSE Arca Last Sale Information will also include a unique sequence number that the Exchange assigns to each trade and that allows an investor to track the context of the trade through such other Exchange market data products as ArcaBook®.

The Exchange proposes to charge $750 per month for access to each of the NYSE Arca Last Sale Information datafeeds that NYSE Arca makes available. The Exchange proposes to charge each subscriber to an NYSE Arca-Only Vendor's NYSE Arca Trades service: $5 per month per display device for the receipt and use of NYSE Arca Last Sale Information relating to Network A and Network B Eligible Securities (as the CTA Plan uses those terms); and $5 per month per display device for the receipt and use of NYSE Arca Last Sale Information relating to securities listed on Nasdaq.[4] The access fee applies equally to all NYSE Arca-Only Vendors that receive the NYSE Arca Trades datafeed and the device fee applies equally to all subscribers that receive an NYSE Arca-Only Vendor's NYSE Arca Trades service. The Exchange does not propose to impose any program classification charges for the use of NYSE Arca Trades.

NYSE Arca represents that no investors or broker-dealers are required to subscribe to the product, as they can find the same NYSE Arca last sale prices either in the Exchange's NYSE Arca Realtime Reference Prices service,[5] or integrated with the prices that other markets make available under the CTA Plan. NYSE Arca anticipates that, even though NYSE Arca Trades' Last Sale Information provides a less expensive alternative to the consolidated price information that investors and broker-dealers receive from CTA, the information that NYSE Arca contributes to the CTA consolidated datafeed and

[1] 15 U.S.C. 78s(b)(1).

[2] 17 CFR 240.19b–4.

[3] *See* Securities Exchange Act Release No. 59308 (January 28, 2009), 74 FR 5955 (February 3, 2009).

[4] The Exchange does not currently perceive a demand for a nonprofessional subscriber fee for NYSE Arca Trades, but will monitor customer response.

[5] *See* Securities Exchange Act Release No. 58444 (August 29, 2008), 73 FR 51872 (September 5, 2008) (SR–NYSEArca–2008–96).

the low latency of the CTA datafeed will continue to satisfy the needs of the vast majority of individual and professional investors. The Exchange developed NYSE Arca Trades primarily at the request of traders who are very latency sensitive and anticipates that demand for the product will derive primarily from investors and broker-dealers who desire to use NYSE Arca Trades to power certain trading algorithms or smart order routers.[6]

The Exchange will require NYSE Arca-Only Vendors to enter into the form of ''vendor'' agreement into which the CTA Plan requires recipients of the Network A last sale prices information datafeeds to enter (the ''Network A Vendor Form''). The Network A Vendor Form will authorize the NYSE Arca-Only Vendor to provide the NYSE Arca Trades service to its subscribers and customers. The Network A Participants drafted the Network A Vendor Form, it is sufficiently generic to accommodate NYSE Arca Trades, and it has been in use in substantially the same form since 1990.[7] The Exchange will require professional and non-professional subscribers to NYSE Arca Trades to undertake to comply with the same contract, reporting, payment, and other administrative requirements as to which the Network A Participants subject them in respect of Network A last sale information under the CTA Plan.

III. Discussion

The Commission finds that the proposed rule change is consistent with the requirements of the Act and the rules and regulations thereunder applicable to a national securities exchange.[8] In particular, it is consistent with Section 6(b)(4) of the Act,[9] which requires that the rules of a national securities exchange provide for the equitable allocation of reasonable dues, fees, and other charges among its members and issuers and other parties using its facilities, and Section 6(b)(5) of the Act,[10] which requires, among other things, that the rules of a national securities exchange be designed to promote just and equitable principles of trade, to remove impediments to and perfect the mechanism of a free and open market and a national market system and, in general, to protect investors and the public interest, and not be designed to permit unfair discrimination between customers, issuers, brokers, or dealers.

The Commission also finds that the proposed rule change is consistent with the provisions of Section 6(b)(8) of the Act,[11] which requires that the rules of an exchange not impose any burden on competition not necessary or appropriate in furtherance of the purposes of the Act. Finally, the Commission finds that the proposed rule change is consistent with Rule 603(a) of Regulation NMS,[12] adopted under Section 11A(c)(1) of the Act, which requires an exclusive processor that distributes information with respect to quotations for or transactions in an NMS stock to do so on terms that are fair and reasonable and that are not unreasonably discriminatory.[13]

The Commission has reviewed the proposal using the approach set forth in the NYSE Arca Order for non-core market data fees.[14] In the NYSE Arca Order, the Commission stated that ''when possible, reliance on competitive forces is the most appropriate and effective means to assess whether the terms for the distribution of non-core data are equitable, fair and reasonable, and not unreasonably discriminatory.'' [15] It noted that the ''existence of significant competition provides a substantial basis for finding that the terms of an exchange's fee proposal are equitable, fair, reasonable, and not unreasonably or unfairly discriminatory.'' [16] If an exchange ''was subject to significant competitive forces in setting the terms of a proposal,'' the Commission will approve a proposal unless it determines that ''there is a substantial countervailing basis to find that the terms nevertheless fail to meet an applicable requirement of the Exchange Act or the rules thereunder.'' [17]

As noted in the NYSE Arca Order, the standards in Section 6 of the Act and Rule 603 of Regulation NMS do not differentiate between types of data and therefore apply to exchange proposals to distribute both core data and non-core data. Core data is the best-priced quotations and comprehensive last-sale reports of all markets that the Commission, pursuant to Rule 603(b), requires a central processor to consolidate and distribute to the public pursuant to joint-SRO plans.[18] In contrast, individual exchanges and other market participants distribute non-core data voluntarily. The mandatory nature of the core data disclosure regime leaves little room for competitive forces to determine products and fees. Non-core data products and their fees are, by contrast, much more sensitive to competitive forces. The Commission therefore is able to use competitive forces in its determination of whether an exchange's proposal to distribute non-core data meets the standards of Section 6 and Rule 603. Because NYSE Arca's instant proposal relates to the distribution of non-core data, the Commission will apply the market-based approach set forth in the NYSE Arca Order.

In the NYSE Arca Order, the Commission discussed two broad types of competitive forces that generally apply to exchanges in their distribution of a non-core data product—the need to attract order flow and the availability of data alternatives. These forces also applied to NYSE Arca in setting the terms of this proposal for the NYSE Arca Trades data product: (i) NYSE Arca's compelling need to attract order flow from market participants; and (ii) the availability to market participants of alternatives to purchasing NYSE Arca's data.

Table 1 below provides a recent snapshot of the state of competition in the U.S. equity markets in the month of January 2009: [19]

[6] The latency difference between accessing last sales through the NYSE Arca datafeed or through the CTA datafeed can be measured in tens of milliseconds.

[7] *See* Securities Exchange Act Release Nos. 28407 (September 6, 1990), 55 FR 37276 (September 10, 1990); and 49185 (February 4, 2004), 69 FR 6704 (February 11, 2004).

[8] In approving this proposed rule change, the Commission has considered the proposed rule's impact on efficiency, competition, and capital formation. *See* 15 U.S.C. 78c(f).

[9] 15 U.S.C. 78f(b)(4).

[10] 15 U.S.C. 78f(b)(5).

[11] 15 U.S.C. 78f(b)(6).

[12] 17 CFR 242.603(a).

[13] NYSE Arca is an exclusive processor of NYSE Arca Trades under Section 3(a)(22)(B) of the Act, 15 U.S.C. 78c(a)(22)(B), which defines an exclusive processor as, among other things, an exchange that distributes information with respect to quotations or transactions on an exclusive basis on its own behalf.

[14] *See* Securities Exchange Act Release No. 59039 (December 2, 2008), 73 FR 74770 (December 9, 2008) (SR-NYSEArca-2006-21) (''NYSE Arca Oder''). In the NYSE Arca Order, the Commission describes the competitive factors that apply to non-core market data products. The Commission hereby incorporates by reference the data and analysis from the NYSE Arca Order into this order.

[15] *Id.* at 74771.

[16] *Id.* at 74782.

[17] *Id.* at 74781.

[18] *See* 17 CFR 242.603(b). (''Every national securities exchange on which an NMS stock is traded and national securities association shall act jointly pursuant to one or more effective national market system plans to disseminate consolidated information, including a national best bid and national best offer, on quotations for and transactions in NMS stocks. Such plan or plans shall provide for the dissemination of all consolidated information for an individual NMS stock through a single plan processor.'').

[19] Source: ArcaVision (available at *http://www.arcavision.com*).

TABLE 1

[Reported Share Volume in U.S.-Listed Equities during January 2009 (%)]

Trading venue	All stocks	NYSE-listed	NASDAQ-listed
NASDAQ	27.1	20.5	39.9
All Non-Exchange	26.7	26.2	31.0
NYSE Arca	17.9	15.7	15.8
NYSE	14.8	26.2	0.0
BATS	10.7	9.0	10.8
International Stock Exchange	1.3	1.4	1.4
National Stock Exchange	0.6	0.7	0.7
Chicago Stock Exchange	0.4	0.4	0.3
CBOE Stock Exchange	0.2	0.0	0.1
NYSE Alternext	0.1	0.0	0.0
NASDAQ OMX BX	0.0	0.0	0.0

The market share percentages in Table 1 strongly indicate that NYSE Arca must compete vigorously for order flow to maintain its share of trading volume. The need to attract order flow imposes significant pressure on NYSE Arca to act reasonably in setting its fees for NYSE Arca market data, particularly given that the market participants that must pay such fees often will be the same market participants from whom NYSE Arca must attract order flow. These market participants particularly include the large broker-dealer firms that control the handling of a large volume of customer and proprietary order flow. Given the portability of order flow from one trading venue to another, any exchange that sought to charge unreasonably high data fees would risk alienating many of the same customers on whose orders it depends for competitive survival. Moreover, distributing data widely among investors, and thereby promoting familiarity with the exchange and its services, is an important exchange strategy for attracting order flow.[20]

In addition to the need to attract order flow, the availability of alternatives to NYSE Arca Trades significantly affect the terms on which NYSE Arca can distribute this market data.[21] In setting the fees for its NYSE Arca Trades, the Exchange must consider the extent to which market participants would choose one or more alternatives instead of purchasing the Exchange's data.[22] Of course, the most basic source of information generally available at an exchange is the complete record of an exchange's transactions that is provided in the core data feeds.[23] In this respect, the core data feeds that include an exchange's own transaction information are a significant alternative to the exchange's market data product.[24]

The various self-regulatory organizations, the several Trade Reporting Facilities of FINRA, and ECNs that produce proprietary data, as well as the core data feed, are all sources of competition in non-core data products. As Table 1 illustrates, share volume in U.S.-listed equities is widely dispersed among trading venues, and these venues are able to offer competitive data products as alternatives to NYSE Arca Trades. The Commission believes that the availability of those alternatives, as well as the NYSE Arca's compelling need to attract order flow, imposed significant competitive pressure on the NYSE Arca to act equitably, fairly, and reasonably in setting the terms of its proposal.

Because NYSE Arca was subject to significant competitive forces in setting the terms of the proposal, the Commission will approve the proposal in the absence of a substantial countervailing basis to find that its terms nevertheless fail to meet an applicable requirement of the Act or the rules thereunder. An analysis of the proposal does not provide such a basis. No comments were submitted on this proposal, and the Commission notes that the proposal does not unreasonably discriminate among types of users.

IV. Conclusion

It is therefore ordered, pursuant to Section 19(b)(2) of the Act,[25] that the proposed rule change (SR–NYSEArca–2009–05), be, and it hereby is, approved.

For the Commission, by the Division of Trading and Markets, pursuant to delegated authority.[26]

Florence E. Harmon,

Deputy Secretary.

[FR Doc. E9–6465 Filed 3–24–09; 8:45 am]

BILLING CODE 8010–01–P

[20] *See* NYSE Arca Order at 74784 nn. 218–219 and accompanying text (noting exchange strategy of offering data for free as a means to gain visibility in the marketplace).

[21] *See* Richard Posner, *Economic Analysis of Law* § 9.1 (5th ed. 1998) (discussing the theory of monopolies and pricing). *See also* U.S. Dep't of Justice & Fed'l Trade Comm'n, Horizontal Merger Guidelines § 1.11 (1992), as revised (1997) (explaining the importance of alternatives to the presence of competition and the definition of markets and market power). Courts frequently refer to the Department of Justice and Federal Trade Commission merger guidelines to define product markets and evaluate market power. *See, e.g., FTC* v. *Whole Foods Market, Inc.*, 502 F. Supp. 2d 1 (D.D.C. 2007); *FTC* v. *Arch Coal, Inc.*, 329 F. Supp. 2d 109 (D.D.C. 2004). In considering antitrust issues, courts have recognized the value of competition in producing lower prices. *See, e.g., Leegin Creative Leather Products* v. *PSKS, Inc.*, 127 S. Ct. 2705 (2007); *Atlanta Richfield Co.* v. *United States Petroleum Co.*, 495 U.S. 328 (1990); *Matsushita Elec. Indus. Co.* v. *Zenith Radio Corp.*, 475 U.S. 574 (1986); *State Oil Co.* v. *Khan*, 522 U.S. 3 (1997); *Northern Pacific Raliway Co.* v. *U.S.*, 356 U.S. 1 (1958).

[22] *See* NYSE Arca Order at 74783.

[23] *Id.*

[24] *Id.*

[25] 15 U.S.C. 78s(b)(2).

[26] 17 CFR 200.30–3(a)(12).

SECURITIES AND EXCHANGE COMMISSION

[Release No. 34–59468; File No. SR–NYSEALTR–2009–16]

Self-Regulatory Organizations; Notice of Filing and Immediate Effectiveness of Proposed Rule Change by NYSE Alternext US LLC Amending Rule 300.10T—NYSE Alternext Equities To Provide a Grace Period Under That Rule for Member Organizations That Have Applied for a Trading License To Comply With Certain Exchange Rules

Correction

In notice document E9–4678 beginning on page 9651 in the issue of Thursday, March 5, 2009, make the following correction:

On page 9654, in the first column, in the first paragraph, in the second line from the bottom, ''March 25, 2009'' should read ''March 26, 2009''.

[FR Doc. Z9–4678 Filed 3–25–09; 8:45 am]

BILLING CODE 1505–01–D

SMALL BUSINESS ADMINISTRATION

National Small Business Development Center Advisory Board

AGENCY: U.S. Small Business Administration (SBA).

ACTION: Notice of open Federal Advisory Committee meetings.

SUMMARY: The SBA is issuing this notice to announce the location, date, time and agenda for the third quarter meetings of the National Small Business Development Center (SBDC) Advisory Board.

DATES: The meetings for the third quarter will be held on the following dates:

Tuesday, April 21, 2009 at 1 pm est.

Tuesday, May 19, 2009 at 1 pm est.

Tuesday, June 16, 2009 at 1 pm est.

ADDRESSES: These meetings will be held via conference call.

SUPPLEMENTARY INFORMATION: Pursuant to section 10(a) of the Federal Advisory Committee Act (5 U.S.C. Appendix 2), SBA announces the meetings of the National SBDC Advisory Board. This Board provides advice and counsel to the SBA Administrator and Associate Administrator for Small Business Development Centers.

The purpose of these meetings is to discuss following issues pertaining to the SBDC Advisory Board:

—Summer Site Visit;

—White Paper Issues;

—SBA Update;

—Member Roundtable.

FOR FURTHER INFORMATION CONTACT: The meeting is open to the public however advance notice of attendance is requested. Anyone wishing to be a listening participant must contact Alanna Falcone by Friday, April 17th by fax or e-mail. Her contact information is Alanna Falcone, Program Analyst, 409 Third Street, SW., Washington, DC 20416, Phone, 202–619–1612, Fax 202–481–0134, e-mail, *alanna.falcone@sba.gov*.

Additionally, if you need accommodations because of a disability or require additional information, please contact Alanna Falcone at the information above.

Bridget E. Bean,

Acting Committee Management Officer.

[FR Doc. E9–6550 Filed 3–24–09; 8:45 am]

BILLING CODE 8025–01–P

SOCIAL SECURITY ADMINISTRATION

[Docket No. SSA–2009–0001]

Occupational Information Development Advisory Panel Meeting

AGENCY: Social Security Administration (SSA).

ACTION: Notice of Upcoming Quarterly Panel Meeting.

DATES: April 27, 2009, 8:30 a.m.–5 p.m. (DST); April 28, 2009, 8:30 a.m.–5 p.m. (DST); April 29, 2009, 8:30 a.m.–3 p.m. (DST)

Location: Sheraton Atlanta Hotel.

ADDRESSES: 165 Courtland Street, NE., Atlanta, GA 30303.

SUPPLEMENTARY INFORMATION:

Type of meeting: The meeting is open to the public.

Purpose: This discretionary Panel, established under the Federal Advisory Committee Act of 1972, as amended, shall report to the Commissioner of Social Security. The Panel will provide independent advice and recommendations on plans and activities to replace the Dictionary of Occupational Titles used in the Social Security Administration's (SSA) disability determination process. The Panel will advise the Agency on creating an occupational information system tailored specifically for SSA's disability programs and adjudicative needs. Advice and recommendations will relate to SSA's disability programs in the following areas: Medical and vocational analysis of disability claims; occupational analysis, including definitions, ratings and capture of physical and mental/cognitive demands of work and other occupational information critical to SSA disability programs; data collection; use of occupational information in SSA's disability programs; and any other area(s) that would enable SSA to develop an occupational information system suited to its disability programs and improve the medical-vocational adjudication policies and processes.

Agenda: The Panel will meet on Monday, April 27, 2009, from 8:30 a.m.until 5 p.m. (DST); Tuesday, April 28, 2009, from 8:30 a.m. until 5 p.m. (DST); and, Wednesday, April 29, 2009, from 8:30 a.m. until 3 p.m. (DST). The agenda will be available on the Internet at *http://www.socialsecurity.gov/oidap/* one week prior to the meeting.

The tentative agenda for this meeting includes: Presentations on a variety of issues including SSA's policies, procedures and business practices as they relate to the use of the Dictionary of Occupational Titles in the disability programs; a summary of agency concerns about its occupational information needs; a walk-thru demonstration of two disability cases and analysis of those cases from several user perspectives; presentations from stakeholders (including, but not limited to, vocational experts and claimant representatives); deliberation and discussion; and subcommittee and administrative meetings.

The Panel will hear public comment during the April Quarterly Meeting on Tuesday, April 28, 2009 from 4 to 5 p.m. (DST). In order to comment, members of the public must schedule a time slot—assigned on a first come, first served basis. In the event public comment does not take the entire time allotted, the Panel may use any remaining time to deliberate or conduct other Panel business.

Those interested in providing testimony in person at the meeting or via teleconference should contact the Panel staff by e-mail at *OIDAP@ssa.gov*, or by calling Debra Tidwell-Peters on (410) 965–9617. Those interested are limited to a maximum five minute, verbal presentation. Organizational representatives will be allotted a maximum ten minute, verbal presentation.

Written testimony, no longer than five (5) pages, may be submitted for Panel consideration at any time either in person, by mail, fax or e-mail to *OIDAP@ssa.gov*. Seating is limited. People who need special accommodations in order to attend or participate in the meeting (*e.g.*, sign language interpretation, assistive listening devices, or materials in alternative formats, such as large print or CD) should notify Debra Tidwell-Peters via e-mail to *debra.tidwell-peters@ssa.gov*, or by telephone at 410–965–9617, no later than April 13, 2009. SSA will attempt to meet requests made but cannot guarantee availability of services. All meeting locations are barrier free.

Contact Information: Records of all public Panel proceedings are maintained and available for inspection. Those requiring further information should contact the Panel staff at: Occupational Information Development Advisory Panel, Social Security Administration, 6401 Security Boulevard, 3–E–26 Operations, Baltimore, MD 21235–0001. *Telephone:* 410–965–9617. *Fax:* 202–410–597–0825. E-mail to *OIDAP@ssa.gov*. For additional information, please visit the

Panel Web site at *http://www.socialsecurity.gov/oidap*.

Debra Tidwell-Peters,

Designated Federal Officer, Occupational Information Development Advisory Panel.

[FR Doc. E9–6614 Filed 3–24–09; 8:45 am]

BILLING CODE 4191–02–P

DEPARTMENT OF STATE

[Public Notice 6559]

Culturally Significant Objects Imported for Exhibition Determinations: ''The Tsars and the East: Gifts from Turkey and Iran in the Moscow Kremlin''

SUMMARY: Notice is hereby given of the following determinations: Pursuant to the authority vested in me by the Act of October 19, 1965 (79 Stat. 985; 22 U.S.C. 2459), Executive Order 12047 of March 27, 1978, the Foreign Affairs Reform and Restructuring Act of 1998 (112 Stat. 2681, *et seq.*; 22 U.S.C. 6501 note, *et seq.*), Delegation of Authority No. 234 of October 1, 1999, Delegation of Authority No. 236 of October 19, 1999, as amended, and Delegation of Authority No. 257 of April 15, 2003 [68 FR 19875], I hereby determine that the objects to be included in the exhibition ''The Tsars and the East: Gifts from Turkey and Iran in the Moscow Kremlin,'' imported from abroad for temporary exhibition within the United States, are of cultural significance. The objects are imported pursuant to a loan agreement with the foreign owner or custodian. I also determine that the exhibition or display of the exhibit objects at the Arthur M. Sackler Gallery, Smithsonian Institution, Washington, DC, from on or about May 9, 2009, until on or about September 13, 2009, and at possible additional exhibitions or venues yet to be determined, is in the national interest. Public Notice of these Determinations is ordered to be published in the **Federal Register**.

FOR FURTHER INFORMATION CONTACT: For further information, including a list of the exhibit objects, contact Julie Simpson, Attorney-Adviser, Office of the Legal Adviser, U.S. Department of State (telephone: (202–453–8050). The address is U.S. Department of State, SA–44, 301 4th Street, SW., Room 700, Washington, DC 20547–0001.

March 19, 2009.

C. Miller Crouch,

Acting Assistant Secretary for Educational and Cultural Affairs, Department of State.

[FR Doc. E9–6718 Filed 3–24–09; 8:45 am]

BILLING CODE 4710–05–P

DEPARTMENT OF STATE

[Public Notice 6544]

Shipping Coordinating Committee; Notice of Meeting

The Shipping Coordinating Committee (SHC) will conduct an open meeting at 10 a.m. on Monday, April 13, 2009, in Room 6103 of the United States Coast Guard Headquarters Building, 2100 Second Street, SW., Washington, DC 20593. The primary purpose of the meeting is to prepare for the seventeenth session of the International Maritime Organization (IMO) Sub-Committee on Flag State Implementation (FSI 17) to be held at the IMO's London headquarters from April 20 to 24, 2009. The primary matters to be considered at FSI 17 include:

—Decisions of other IMO bodies;
—Responsibilities of Governments and measures to encourage flag State compliance;
—Mandatory reports under International Convention for the Prevention of Pollution from Ships, 1973, as modified by the Protocol of 1978 (MARPOL 73/78);
—Port reception facilities-related issues;
—Casualty statistics and investigations;
—Harmonization of port State control activities;
—Port State Control (PSC) Guidelines on seafarers' working hours and PSC guidelines in relation to the Maritime Labour Convention, 2006;
—Development of guidelines on port State control under the 2004 Ballast Water Management (BWM) Convention;
—Comprehensive analysis of difficulties encountered in the implementation of IMO instruments;
—Review of the Survey Guidelines under the Harmonized System of Survey and Certification (HSSC);
—Consideration of International Association of Classification Societies (IACS) unified interpretations;
—Review of the Code for the Implementation of Mandatory IMO Instruments;
—Development of a Code for Recognized Organizations;
—Measures to protect the safety of persons rescued at sea; and
—Election of IMO's FSI Sub-Committee Chairman and Vice-Chairman for 2010.

Members of the public may attend this meeting up to the seating capacity of the room. Please note that due to security considerations, two valid, government-issued photo identification documents must be presented to gain entrance to the building. The Coast Guard Headquarters building is accessible by taxi and privately owned conveyance. Please note that parking in the vicinity of the building is extremely limited and that public transportation is not generally available.

To facilitate attendance to this meeting, those who plan to attend should contact the meeting coordinator, Mr. E.J. Terminella, by e-mail at *emanuel.j.terminellajr@uscg.mil*; by phone at (202) 372–1239; by fax at (202) 372–1918; or by writing to Commandant (CG–5432), U.S. Coast Guard Headquarters, 2100 2nd Street, SW., Room 1116, Washington, DC 20593–0001—not later than 10 a.m. on Friday, April 10, 2009. Additional information regarding this and other SHC public meetings, and associated IMO meetings, may also be found at: *http://www.uscg.mil/hq/cg5/imo*.

Dated: March 18, 2009.

Mark Skolnicki,

Executive Secretary, Shipping Coordinating Committee, Department of State.

[FR Doc. E9–6717 Filed 3–24–09; 8:45 am]

BILLING CODE 4710–09–P

DEPARTMENT OF TRANSPORTATION

Office of the Secretary

Notice of Applications for Certificates of Public Convenience and Necessity and Foreign Air Carrier Permits Filed Under Subpart B (Formerly Subpart Q) During the Week Ending February 28, 2009.

The following Applications for Certificates of Public Convenience and Necessity and Foreign Air Carrier Permits were filed under Subpart B (formerly Subpart Q) of the Department of Transportation's Procedural Regulations (*See* 14 CFR 301.201 et seq.). The due date for Answers, Conforming Applications, or Motions to Modify Scope are set forth below for each application. Following the Answer period DOT may process the application by expedited procedures. Such procedures may consist of the adoption of a show-cause order, a tentative order, or in appropriate cases a final order without further proceedings.

Docket Number: DOT–OST–2009–0053.

Date Filed: February 27, 2009.

Due Date for Answers, Conforming Applications, or Motion to Modify Scope: March 20, 2009.

Description: Application of Linea Aerea Puertorriquena, Inc. requesting a certificate of public convenience and necessity authorizing interstate charter

air transportation of persons, property and mail.

Renee V. Wright,

Program Manager, Docket Operations, Federal Register Liaison.

[FR Doc. E9–6604 Filed 3–24–09; 8:45 am]

BILLING CODE 4910–9X–P

DEPARTMENT OF TRANSPORTATION

Office of the Secretary

Notice of Applications for Certificates of Public Convenience and Necessity and Foreign Air Carrier Permits Filed Under Subpart B (Formerly Subpart Q) During the Week Ending March 7, 2009

The following Applications for Certificates of Public Convenience and Necessity and Foreign Air Carrier Permits were filed under Subpart B (formerly Subpart Q) of the Department of Transportation's Procedural Regulations (*See* 14 CFR 301.201 *et seq.*).

The due date for Answers, Conforming Applications, or Motions to Modify Scope are set forth below for each application. Following the Answer period DOT may process the application by expedited procedures. Such procedures may consist of the adoption of a show-cause order, a tentative order, or in appropriate cases a final order without further proceedings.

Docket Number: DOT–OST–2005–22228 and DOT–OST–2009–0058.

Date Filed: March 3, 2009.

Due Date for Answers, Conforming Applications, or Motion to Modify Scope: March 24, 2009.

Description: Application of Continental Micronesia, Inc. requesting a certificate authorizing it to provide scheduled air transportation of persons, property and mail between the United States, via intermediate points and the open skies countries and beyond.

Renee V. Wright,

Program Manager, Docket Operations, Federal Register Liaison.

[FR Doc. E9–6611 Filed 3–24–09; 8:45 am]

BILLING CODE 4910–9X–P

DEPARTMENT OF TRANSPORTATION

Office of the Secretary

Aviation Proceedings, Agreements Filed the Week Ending February 28, 2009

The following Agreements were filed with the Department of Transportation under the provisions of 49 U.S.C. Sections 412 and 414. Answers may be filed within 21 days after the filing of the application.

Docket Number: DOT–OST–2009–0048.

Date Filed: February 24, 2009.

Parties: Members of the International Air Transport Association.

Subject:

PTC COMP Mail Vote 589, Resolution 011a, Mileage Manual Non TC Member/Non IATA Carrier Sectors (Memo 1516).

Intended effective date: 15 March 2009.

Docket Number: DOT–OST–2009–0051.

Date Filed: February 26, 2009.

Parties: Members of the International Air Transport Association.

Subject:

TC12 North Atlantic—Middle East (except between USA and Jordan), TC12 Mid Atlantic—Middle East, TC12 South Atlantic—Middle East, Resolutions and Specified Fares Tables (Memo 0293).

Minutes: TC12 North, Mid, South Atlantic—Middle East, TC12 North, Mid, South Atlantic—Africa (Memo 0295/0278).

Intended effective date: 1 April 2009.

Docket Number: DOT–OST–2009–0052.

Date Filed: February 26, 2009.

Parties: Members of the International Air Transport Association.

Subject:

TC12 North Atlantic—Middle East between USA and Jordan, Resolutions and Specified Fares Tables (Memo 0294).

Minutes: TC12 North, Mid, South Atlantic—Middle East, TC12 North, Mid, South Atlantic—Africa (Memo 0295/0278).

Intended effective date: 1 April 2009.

Renee V. Wright,

Program Manager, Docket Operations, Federal Register Liaison.

[FR Doc. E9–6610 Filed 3–24–09; 8:45 am]

BILLING CODE 4910–9X–P

DEPARTMENT OF TRANSPORTATION

Office of the Secretary

Aviation Proceedings, Agreements Filed the Week Ending March 7, 2009

The following Agreements were filed with the Department of Transportation under the Sections 412 and 414 of the Federal Aviation Act, as amended(49 U.S.C. 1383 and 1384) and procedures governing proceedings to enforce these provisions. Answers may be filed within 21 days after the filing of the application.

Docket Number: DOT–OST–2009–0059.

Date Filed: March 4, 2009.

Parties: Members of the International Air Transport Association.

Subject: TC12 North Atlantic—Africa (except between USA and Reunion), TC12 Mid Atlantic—Middle East, TC12 South Atlantic—Middle East, Resolutions and Specified Fares Tables (Memo 0276),

Minutes: TC12 North, Mid, South Atlantic—Middle East, TC12 North, Mid, South Atlantic—Africa (Memo 0295/0278),

Intended effective date: 1 May 2009.

Docket Number: DOT–OST–2009–0060.

Date Filed: March 4, 2009.

Parties: Members of the International Air Transport Association.

Subject: TC12 North Atlantic—Africa between USA and Reunion, Resolutions and Specified Fares Tables (Memo 0277),

Minutes: TC12 North, Mid, South Atlantic—Middle East, TC12 North, Mid, South Atlantic—Africa (Memo 0295/0278),

Intended effective date: 1 May 2009.

Renee V. Wright,

Program Manager, Docket Operations, Federal Register Liaison.

[FR Doc. E9–6600 Filed 3–24–09; 8:45 am]

BILLING CODE 4910–9X–P

DEPARTMENT OF TRANSPORTATION

Federal Aviation Administration

[Summary Notice No. PE–2009–11]

Petition for Exemption; Summary of Petition Received

AGENCY: Federal Aviation Administration (FAA), DOT.

ACTION: Notice of petition for exemption received.

SUMMARY: This notice contains a summary of a petition seeking relief from specified requirements of 14 CFR. The purpose of this notice is to improve the public's awareness of, and participation in, this aspect of FAA's regulatory activities. Neither publication of this notice nor the inclusion or omission of information in the summary is intended to affect the legal status of the petition or its final disposition.

DATES: Comments on this petition must identify the petition docket number involved and must be received on or before April 14, 2009.

ADDRESSES: You may send comments identified by Docket Number FAA–2009–0083 using any of the following methods:

• *Government-wide rulemaking Web site:* Go to *http://www.regulations.gov* and follow the instructions for sending your comments electronically.

• *Mail:* Send comments to the Docket Management Facility; U.S. Department of Transportation (DOT), 1200 New Jersey Avenue, SE., West Building Ground Floor, Room W12–140, Washington, DC 20590.

• *Fax:* Fax comments to the Docket Management Facility at 202–493–2251.

• *Hand Delivery:* Bring comments to the Docket Management Facility in Room W12–140 of the West Building Ground Floor at 1200 New Jersey Avenue, SE., Washington, DC, between 9 a.m. and 5 p.m., Monday through Friday, except Federal holidays.

Privacy: We will post all comments we receive, without change, to *http://www.regulations.gov*, including any personal information you provide. Using the search function of our docket Web site, anyone can find and read the comments received into any of our dockets, including the name of the individual sending the comment (or signing the comment for an association, business, labor union, etc.). You may review DOT's complete Privacy Act Statement in the **Federal Register** published on April 11, 2000 (65 FR 19477–78).

Docket: To read background documents or comments received, go to *http://www.regulations.gov* at any time or to the Docket Management Facility in Room W12–140 of the West Building Ground Floor at 1200 New Jersey Avenue, SE., Washington, DC, between 9 a.m. and 5 p.m., Monday through Friday, except Federal holidays.

FOR FURTHER INFORMATION CONTACT: Laverne Brunache (202) 267–3133 or Tyneka Thomas (202) 267–7626, Office of Rulemaking, Federal Aviation Administration, 800 Independence Avenue, SW., Washington, DC 20591.

This notice is published pursuant to 14 CFR 11.85.

Issued in Washington, DC, on March 20, 2009.

Pamela Hamilton-Powell,

Director, Office of Rulemaking.

Petition for Exemption

Docket No.: FAA–2009–0083.

Petitioner: CitationShares Management, LLC.

Section of 14 CFR Affected: 14 CFR 91.23, 91.1001.

Description of Relief Sought: CitationShares Management, LLC (CM), a fractional program manager and certificated air carrier, has petitioned the Federal Aviation Administration to provide an exemption from the following regulations pertaining to part 91 subpart K fractional ownership operations:

(1) CM requests an exemption from § 91.1001 to the extent necessary to clarify that ''fractional owner or owner,'' and ''fractional ownership interest,'' as defined in § 91.1001(b)(3) and (b)(4), of subpart K, are not limited to FAA registered owners but may include a beneficial owner or beneficial ownership interest arising under a single Delaware statutory trust structure outlined in the CM Fractional Program Trust Structure;

(2) CM requests an exemption from § 91.1001 to the extent necessary to clarify that ''dry lease exchange,'' as defined in § 91.1001(b)(2) of subpart K, may include the arrangement for exchange of aircraft arising under the CM Fractional Program Trust Structure; and

(3) CM requests an exemption from § 91.23 to the extent necessary to confirm that the arrangements among and between the fractional owners and CM, in its capacity as a part 135 certificate holder, does not require further compliance with that section.

The purpose of the exemption would be to permit CM to implement a Fractional Program Trust Structure for ownership, registration, and operation of fractional ownership program aircraft. A key feature of the proposed structure is that participating fractional owners would no longer hold legal title to a fractional share of a program aircraft. Instead, a Delaware statutory trust would hold legal title to the entire aircraft, and fractional ownership program participants would be beneficial owners of a series in the trust. CM would act as the fractional ownership program manager, would administer the statutory trust, and would continue operating program aircraft as a part 135 certificate holder. The CM Fractional Program Trust Structure would continue to follow the operational control provisions as set forth in §§ 91.1009–91.1013 of subpart K.

Additionally, CM seeks an exemption from § 91.1001 pertaining to dry-lease aircraft exchanges. Under the CM Fractional Program Trust Structure, there would not be a dry-lease aircraft exchange arrangement among all of the fractional owners. Instead, CM would hold a lease to the program aircraft entered into a statutory trust, and fractional owners would have access to all of the program aircraft, without crew, on an as needed basis through a sublease directly from CM.

Finally, CM requests an exemption from § 91.23, the truth-in-leasing requirements in leases and conditional sales contracts, to confirm that those requirements would not be applicable to the dry-lease exchange component of the CM Fractional Program Trust Structure because CM is a part 135 certificate holder.

[FR Doc. E9–6563 Filed 3–24–09; 8:45 am]

BILLING CODE 4910–13–P

DEPARTMENT OF TRANSPORTATION

National Highway Traffic Safety Administration

[Docket No. NHTSA–2008–0107, Notice 2]

Spyker Automobielen B.V.; Grant of Application for Limited Extension of Temporary Exemption From Certain Requirements of FMVSS No. 208

AGENCY: National Highway Traffic Safety Administration (NHTSA), Department of Transportation (DOT).

ACTION: Grant of petition for limited extension of a Temporary Exemption from certain provisions of Federal Motor Vehicle Safety Standard (FMVSS) No. 208, *Occupant Crash Protection*.

SUMMARY: This notice grants the Spyker Automobielen B.V. (''Spyker'') application for a limited extension of a previously received temporary exemption from certain requirements of Federal Motor Vehicle Safety Standard (FMVSS) No. 208, *Occupant Crash Protection*, for the Spyker C vehicle line. In accordance with 49 CFR Part 555, the basis for the grant is that compliance would cause substantial economic hardship to a low-volume manufacturer that has tried in good faith to comply with the standard, and the exemption would have a negligible impact on motor vehicle safety. The exemption is effective through December 15, 2010.

In accordance with the requirements of 49 U.S.C. 30113(b)(2), we published a notice of receipt of the application and asked for public comments.[1]

DATES: The exemption from the applicable Federal motor vehicle safety standards is effective from March 25, 2009 through December 15, 2010.

FOR FURTHER INFORMATION CONTACT: Sarah Alves, Office of the Chief Counsel, NCC–112, National Highway Traffic Safety Administration, 1200 New Jersey Avenue, SE., Washington, DC 20590. Phone: 202–366–2992; Fax: 202–366–3820; e-Mail: *sarah.alves@dot.gov*.

SUPPLEMENTARY INFORMATION:

I. Advanced Air Bag Requirements and Small

[1] To view the application or public comments, please go to: *http://www.regulations.gov* (Docket No. NHTSA–2007–0107).

Volume Manufacturers
II. Overview and Statutory Background of Petition for Economic Hardship Exemption
III. Petition of Spyker
IV. **Federal Register** Notice of May 27, 2008
V. NHTSA Analysis of Petition
VI. Agency Decision

I. Advanced Air Bag Requirements and Small Volume Manufacturers

In 2000, NHTSA upgraded the requirements for air bags in passenger cars and light trucks, requiring what are commonly known as ''advanced air bags.''[2] The upgrade was designed to meet the goals of improving protection for occupants of all sizes, belted and unbelted, in moderate-to-high-speed crashes, and of minimizing the risks posed by air bags to infants, children, and other occupants, especially in low-speed crashes.

The advanced air bag requirements were a culmination of a comprehensive plan that the agency announced in 1996 to address the adverse effects of air bags. This plan also included an extensive consumer education program to encourage the placement of children in rear seats. The new requirements were phased in beginning with the 2004 model year.

Small volume manufacturers were not subject to the advanced air bag requirements until September 1, 2006, but their efforts to bring their respective vehicles into compliance with these requirements began several years earlier. However, because the new requirements were challenging, major air bag suppliers concentrated their efforts on working with large volume manufacturers, and thus, until recently, small volume manufacturers had limited access to advanced air bag technology. Because of the nature of the requirements for protecting out-of-position occupants, ''off-the-shelf'' systems could not be readily adopted. Further complicating matters, because small volume manufacturers build so few vehicles, the costs of developing custom air bag systems compared to potential benefits discouraged some air bag suppliers from working with small volume manufacturers.

The agency has carefully tracked occupant fatalities resulting from air bag deployment. Our data indicate that the agency's efforts in the area of consumer education and manufacturers' providing depowered air bags were successful in reducing air bag fatalities even before advanced air bag requirements were implemented. As always, we are concerned about the potential safety implication of any temporary exemptions granted by this agency.

In a petition submitted on August 17, 2007,[3] Spyker Automobielen B.V. (''Spyker'') requested a limited extension of the temporary exemption that it previously received,[4] i.e., a three-year hardship exemption from the ''basic'' air bag requirements and advanced air bag provisions of FMVSS No. 208, *Occupant Crash Protection*, as well as from 49 CFR Part 581, *Bumper Standard*. The requested exemption would apply to the Spyker C vehicle line and would apply to certain advanced air bag requirements, specifically the requirements in S19, S21, S23, and S25 (the child and 5th percentile adult female driver out-of-position portions of the advanced air bag provisions of FMVSS No. 208). Spyker requested an extension for exemption from these requirements through December 15, 2010.

II. Overview and Statutory Background of Petition for Economic Hardship Exemption

In accordance with 49 U.S.C. 30113 and the procedures in 49 CFR Part 555, Spyker has petitioned the agency for a limited extension of a temporary exemption from certain requirements of FMVSS No. 208. The basis for the application was that compliance would cause substantial economic hardship to a manufacturer that has tried in good faith to comply with the standard. A manufacturer is eligible to apply for a hardship exemption if its total motor vehicle production in its most recent year of production did not exceed 10,000 vehicles, as determined by the NHTSA Administrator (49 U.S.C. 30113).

In determining whether a manufacturer of a vehicle meets that criterion, NHTSA considers whether a second vehicle manufacturer also might be deemed the manufacturer of that vehicle. The statutory provisions governing motor vehicle safety (49 U.S.C. Chapter 301) do not include any provision indicating that a manufacturer might have substantial responsibility as manufacturer of a vehicle simply because it owns or controls a second manufacturer that assembled that vehicle. However, the agency considers the statutory definition of ''manufacturer'' (49 U.S.C. 30102(a)(5)) to be sufficiently broad to include sponsors, depending on the circumstances. Thus, NHTSA has stated that a manufacturer may be deemed to be a sponsor and thus a manufacturer of a vehicle assembled by a second manufacturer if the first manufacturer had a substantial role in the development and manufacturing process of that vehicle.

Finally, while 49 U.S.C. 30113(b) states that exemptions from a Safety Act standard are to be granted on a ''temporary basis,'' the statute also expressly provides for renewal of an exemption on reapplication.[5] Manufacturers are nevertheless cautioned that the agency's decision to grant an initial petition in no way predetermines that the agency will repeatedly grant renewal petitions, thereby imparting semi-permanent exemption from a safety standard. Exempted manufacturers seeking renewal must bear in mind that the agency is directed to consider financial hardship as but one factor, along with the manufacturer's on-going good faith efforts to comply with the regulation, the public interest, consistency with the Safety Act, generally, as well as other such matters provided in the statute.

III. Petition of Spyker

Background. NHTSA notes that a manufacturer is eligible to apply for a hardship exemption if its total motor vehicle production in its most recent year of production does not exceed 10,000, as determined by the NHTSA Administrator (49 U.S.C. 30113(d)). In its petition, Spyker stated that it manufactured 94 automobiles in 2006 and estimated a total production of 106 automobiles in 2007. Spyker stated that 60 automobiles were imported into the U.S. in 2006, and Spyker projected that U.S. imports would total 70 Spyker automobiles in 2007. Subsequently, Spyker advised NHTSA that it manufactured 22 automobiles in 2007 and 43 in 2008. Seven Spyker automobiles were imported into the U.S. in 2007 and 6 were imported in 2008.

Spyker is a wholly owned subsidiary of Spyker Cars NV, a publicly traded Dutch company. Spyker stated that it is unaware of any other automobile manufacturer having an ownership interest in Spyker.[6] Moreover, Spyker stated that Spyker Cars NV has no ownership interest in any other vehicle

[2] *See* 65 FR 30680 (May 12, 2000).

[3] The petition is available at *http://www.regulations.gov*, Docket No. NHTSA–2007–0107.

[4] The original petition of Spyker is available at *http://www.regulations.gov*, Docket No. NHTSA–2005–20455. The notice granting that petition, Spyker Automobielen B.V.; Grant of Application for a Temporary Exemption From Federal Motor Vehicle Safety Standards Nos. 201 and 208; and Part 581 Bumper Standard, was published at 70 FR 39007, July 6, 2005.

[5] 49 U.S.C. 30113(b)(1).

[6] Only parties with an interest of more than 5% are known and need to register with the Dutch authority for financial markets.

manufacturer, and is not under any common control with another automobile manufacturer.

In July 2005, NHTSA granted Spyker a three-year hardship exemption from the ''basic'' air bag requirements and advanced air bag provisions of FMVSS No. 208 (S4.1.5.3; S14), and Part 581, expiring on June 15, 2008 (70 FR 39007; July 6, 2005). In this same grant, NHTSA also exempted Spyker from S7 of FMVSS No. 108, *Lamps, Reflective Devices, and Associated Equipment*, for the first 10 Spyker C8 vehicles imported into the United States.

Requested exemption. Spyker is requesting a limited extension of that temporary exemption. Spyker is requesting an exemption from the child and 5th percentile adult female driver out-of-position portions of the advanced air bag provisions of FMVSS No. 208 (S19, S21, S23, and S25).[7] Spyker's previous exemption extended until June 15, 2008,[8] and Spyker requested a two-and-a-half year extension that would exempt Spyker's C8 vehicle line from the listed advanced air bag requirements through December 15, 2010. Spyker submitted a supplement to their petition on April 7, 2008, which is posted in this docket, and which included updated financial information from 2007. *See* Docket No. NHTSA–2008–0107–0003.

Economic hardship. Spyker stated that its previously established financial hardship [9] continues, in part due to the start-up nature of the company. Specifically, Spyker's financial information submission showed a net operating loss of 13,000,000 Euros ($16,900,000) from 2004 to 2006.[10] Spyker originally projected a further loss in 2007 of 6,500,000 Euros ($8,450,000). Moreover, based on 2008–2010 projections, Spyker estimated that if the limited extension is denied, Spyker will bear a loss of over 2,000,000 Euros ($2,600,000) during that time. Spyker also stated that the loss of sales in the U.S. that would result if the limited extension is denied could not be made up in the rest of the world because the U.S. is the largest and most important market for the vehicle. Spyker argued that such consequences demonstrate ''substantial economic hardship'' within the meaning of 49 U.S.C. 30113(b)(3)(B)(i).

On April 7, 2008, Spyker submitted to NHTSA a supplement to their petition because Spyker had recently updated its accounts for 2007.[11] Spyker stated in its supplement to its petition that 2007 losses now total 16,000,000 Euros ($20,800,000), and stated that this higher number was due to their parent company having sold its interest in its Formula 1 (''F1'') racing team, and extraordinary financing and consulting costs. This new financial statement information is in further support of the substantial economic hardship criterion.

Good faith efforts to comply. Spyker stated that when it filed for the original exemption, the C vehicle line had no air bag system at all, and that the windshield design does not permit a top-mounted air bag on the passenger side, thereby precluding the use of a low risk deployment system. Spyker indicated that it has spent over 3,500,000 Euros bringing the C vehicle line into compliance with all of the high-speed belted and unbelted crash test requirements of the Advanced Air Bag rule by developing an ''interim'' driver air bag system for the C vehicle line. However, it stated that it has not been able to bring the vehicle into compliance with the child out-of-position requirements (S19, S21, and S23), and the 5th percentile adult female out-of-position requirements for the driver seat (S25). Despite efforts to involve numerous potential suppliers, Spyker has not identified any that are willing to work with the company to develop an automatic suppression system for compliance with S19, S21, and S23. Spyker has budgeted an additional 3,500,000 Euros for 2008–2010 to develop, test and build a fully-compliant advanced air bag system for the new C line vehicle. Spyker also indicated that by the time its new D vehicle line is launched, Spyker will have spent 5,500,000 Euros developing for this new line an advanced air bag system fully compliant with FMVSS No. 208.

Spyker further indicated that it plans to re-engineer the C vehicle line for model year 2011, at which time the D line advanced air bag system will be incorporated into the new C line, making the redesigned C line fully compliant with all advanced air bag requirements. Spyker stated that it will use the extension period, if granted, to develop, test, tool and implement the redesigned model.

Spyker argues that an exemption would be in the public interest. The petitioner put forth several arguments in favor of a finding that the requested exemption is consistent with the public interest and would not have a significant adverse impact on safety. Specifically:

1. Spyker stated that the exempted vehicles will comply with all FMVSSs other than the provisions that are the subject of this extension request.

2. The petitioner stated that an exemption will benefit U.S. employment and U.S. companies because Spyker vehicles are distributed by a U.S. company, Spyker of North America, and are sold and serviced in the U.S. through a network of 17 dealers. Spyker argued that denial of an extension will negatively impact these companies.

3. Spyker argued that if the exemption is not granted, U.S. consumer choice would be harmed and that the agency has long maintained that the National Traffic and Motor Vehicle Safety Act seeks, if possible, to avoid limiting consumer choice.

4. The petitioner argued that given its exotic design and high-performance nature, the C vehicle line is not expected to be used extensively, nor is it expected to carry children with any frequency.

5. Spyker stated that as of the submission date of its application for extension, approximately 60 exempted C line Spykers have been imported into the U.S. and there have been no reports of any air bag-related injuries.

6. Spyker stated that an important safety feature on the C line offers enhanced occupant protection. The petitioner stated that occupants are positioned in a protective ''cell'' because the main chassis structure is built around them.

IV. Federal Register Notice of May 27, 2008

In the **Federal Register** of May 27, 2008 (73 FR 30443), we published a notice announcing receipt of an application from Spyker for a limited extension of a previously received temporary exemption from the advanced air bag requirements of FMVSS No. 208 for the Spyker C vehicle line. We invited public comment on Spyker's application. We received one comment in response to this publication from Spyker in support of its petition. *See* Docket No. NHTSA–2008–0107–0004. The comment was brief and provided an update on Spyker's air bag development work, confirming that the driver air bag was incorporated into Spyker vehicle production as of the start

[7] The previous exemption covered these provisions by including S14.

[8] We note that under 49 CFR 555.8(e), ''if an application for renewal of temporary exemption that meets the requirements of § 555.5 has been filed not later than 60 days before the termination date of an exemption, the exemption does not terminate until the Administrator grants or denies the application for renewal.''

[9] *See* 70 FR 39007 (July 6, 2005).

[10] All dollar values are based on an exchange rate of 1 Euro = $1.30.

[11] *See* Supplement to Petition of Spyker Cars for Limited Extension of Temporary Exemption (April 7, 2008), Docket No. NHTSA–2008–0107–0003.

of the second quarter of 2008. It stated that the passenger air bag development has been proceeding with testing and would be incorporated into all vehicle production prior to the expiration of the current exemption.

V. NHTSA Analysis of Petition

The following discussion provides our decision regarding Spyker's temporary exemption request pertaining to the advanced air bag requirement of FMVSS No. 208.

In July 2005 Spyker was granted a temporary exemption from the bumper standard and from the ''basic'' air bag requirements. Despite significant expenditures of capital and labor in pursuit of compliance,[12] Spyker was unable to bring its Spyker C vehicle line into compliance with all of the advanced air bag requirements (although, we note, it was able to comply with sections S14.5, S15, and S17 of Standard No. 208, as well as 49 CFR Part 581, *Bumper Standard*).

Spyker stated that the U.S. sales losses that would occur as the result of an exemption extension denial could not be made up in the rest of the world because the U.S. is by far the largest market for Spyker vehicles, representing approximately 70 percent of Spyker sales. At the time of the petition, Spyker estimated that the difference between granting and denying the extension would amount to 35,000,000 Euros ($45,500,000). Spyker stated that such consequences demonstrate ''substantial economic hardship'' within the meaning of 49 U.S.C. 30113(b)(3)(B)(i).

Spyker has requested that additional specific details regarding its finances and financial forecasts be afforded confidential treatment under 49 CFR 512.4, asserting a claim for confidential information. NHTSA has granted the request and determined that this information is to be afforded confidential treatment.

While it complies with a significant portion of the requirements of FMVSS No. 208, the petitioner has not been able to achieve full compliance despite considerable effort put forth to that end. When Spyker applied for and was granted its original exemption, the C8 vehicle line had no air bag system at all because the original vehicle was designed in 2000 without the U.S. market and air bags in mind. Spyker indicated that it has spent over 3,500,000 Euros bringing the C vehicle line into compliance with all of the high-speed belted and unbelted crash test requirements of the advanced air bag requirements by developing an ''interim'' driver air bag system for the C vehicle line. However, it stated that it has not been able to bring the vehicle into compliance with the child out-of-position requirements (S19, S21, and S23), and the 5th percentile adult female out-of-position requirements for the driver seat (S25). Despite recent efforts to involve numerous potential suppliers, Spyker has not identified any that are willing to work with the company to develop an automatic suppression system for compliance with S19, S21, and S23. Spyker has budgeted an additional 3,500,000 Euros for 2008–2010 to develop, test and build a fully-compliant advanced air bag system for the new C line vehicle. Spyker also indicated that by the time its new D vehicle line is launched, Spyker will have spent 5,500,000 Euros developing for this new line an advanced air bag system fully compliant with FMVSS No. 208. Additionally, Spyker stated in its petition that it plans to re-engineer the C line for MY 2011 (including new tooling), at which time the D line advanced air bag system will be incorporated into the C line, making the redesigned C line fully compliant with FMVSS No. 208. Spyker explains that it would use the exemption extension period to develop, test, tool, and implement the redesigned model.

Given the above discussion, we conclude that Spyker has demonstrated good faith effort to bring its vehicles into compliance with the relevant advanced air bag requirements of FMVSS No. 208 and has also demonstrated the requisite financial hardship.

We believe there are public interest considerations served by granting this petition. These include the general consideration of affording consumers a wider variety of motor vehicle choices and the economic benefits of affording continued employment to the Spyker's U.S. work force and distribution network. Moreover, we believe this exemption will have a minimal impact on safety given the limited number of vehicles, the relatively low-use nature of the vehicle, and the rare use of the vehicle by young children.

After considering all of the relevant information, including Spyker's commitment to meet the advanced air bag requirements for the redesigned vehicle, we believe Spyker has presented a persuasive case for extending, in a limited way, the current exemption until December 15, 2010. The agency notes that the vehicle subject to this petition must comply with the other portions of FMVSS No. 208 and all other applicable Federal motor vehicle safety standards.

VI. Agency Decision

In consideration of the foregoing, we conclude that compliance with the advanced air bag requirements of FMVSS No. 208, *Occupant Crash Protection*, would cause substantial economic hardship to a small-volume manufacturer that has tried in good faith to comply with the standard. We further conclude that granting of an exemption would be in the public interest and consistent with the objectives of traffic safety.

We note that, as explained below, prospective purchasers will be notified that the vehicle is exempted from the specified advanced air bag requirements of FMVSS No. 208. Under 49 CFR § 555.9(b), a manufacturer of an exempted passenger car must affix securely to the windshield or side window of each exempted vehicle a label containing a statement that the vehicle conforms to all applicable Federal motor vehicle safety standards in effect on the date of manufacture ''except for Standards Nos. [listing the standards by number and title for which an exemption has been granted] exempted pursuant to NHTSA Exemption No._____.'' This label notifies prospective purchasers about the exemption and its subject. Under 49 CFR 555.9(c), this information must also be included on the vehicle's certification label.

We note that the text of 49 CFR 555.9 does not expressly indicate how the required statement on the two labels should read in situations where an exemption covers part but not all of a Federal motor vehicle safety standard. Specifically in the case of FMVSS No. 208, we believe that a statement that the vehicle has been exempted from FMVSS No. 208 generally, without an indication that the exemption is limited to the specified advanced air bag provisions, could be misleading. A consumer might incorrectly believe that the vehicle has been exempted from all of FMVSS No. 208's requirements. Moreover, we believe that the addition of a reference to such provisions by number without an indication of its subject matter would be of little use to consumers, since they would not know the subject of those specific provisions. For these reasons, we believe the two labels should read in relevant part, ''except for S19, S21, S23, and S25 (Advanced Air Bag Requirements) of Standard No. 208, Occupant Crash Protection, exempted pursuant to * * *.'' We note that the phrase ''Advanced Air Bag

[12] The precise figures are provided in the confidential version of the petition.

Requirements'' is an abbreviated form of the title of S14 of FMVSS No. 208.

In accordance with 49 U.S.C. 30113(b)(3)(B)(i), Spyker is granted NHTSA Temporary Exemption No. EX 08–03, from S19, S21, S23 and S25 of FMVSS No. 208. The exemption shall remain in effect until December 15, 2010.

(49 U.S.C. 30113; delegations of authority at 49 CFR 1.50. and 501.8)

Issued on: March 19, 2009.

Ronald L. Medford,

Acting Deputy Administrator.

[FR Doc. E9–6576 Filed 3–24–09; 8:45 am]

BILLING CODE 4910–59–P

DEPARTMENT OF TRANSPORTATION

Surface Transportation Board

[STB Ex Parte No. 290 (Sub-No. 4)]

Railroad Cost Recovery Procedures—Productivity Adjustment

AGENCY: Surface Transportation Board.

ACTION: Adoption of a railroad cost recovery procedures productivity adjustment.

SUMMARY: In a decision served on February 5, 2009, we proposed to adopt 1.012 (1.2% per year) as the measure of average change in railroad productivity for the 2003–2007 (5-year) averaging period. This value represented no change from the current measure of 1.2% that was developed for the 2002–2006 period. The decision stated that comments may be filed addressing any perceived data and computational errors in our calculation. It also stated that, if there were no further action taken by the Board, the proposed productivity adjustment would become effective on March 1, 2009.[1]

On February 23, 2009, the Board received comments from the Association of American Railroads (AAR). AAR noted that that they could not check the computation of the productivity value without access to certain input data. To ensure that release of this data would not violate our confidentiality practices, we conducted additional analysis of the data AAR referenced. In that review, we found inconsistencies in our application of the program processes used to compute our most recent estimate of productivity change. Therefore, we reopened this proceeding based on material error under 49 U.S.C. 722(c) to correct these inconsistencies and issued a modified annual productivity decision on March 20, 2009. We find that the increase in productivity in 2007 should have been reported as 1.018 instead of 1.004. As a result, the 5-year geometric mean of the annual change in productivity is 1.015 (or 1.5% per year), not 1.012 (or 1.2% per year), as originally reported.

In its comments, AAR also requested that we eliminate reference to the arithmetic mean over the previous five years, as that mean is not required by regulation. We had originally reported the 2003–2007 productivity growth using both an arithmetic and geometric mean. The AAR is correct to note that the arithmetic mean is not used in any required applications and can be a source of confusion. Therefore, we will no longer publish the arithmetic mean in future Ex Parte No. 290 (Sub-No. 4) decisions.

DATES: *Effective Date:* The productivity adjustment is effective March 20, 2009.

FOR FURTHER INFORMATION CONTACT: Pedro Ramirez, (202) 245–0333. [Federal Information Relay Service (FIRS) for the hearing impaired: 1–800–877–8339.]

SUPPLEMENTARY INFORMATION: Additional information is contained in the Board's decision, which is available on our Web site *http://www.stb.dot.gov.*

This action will not significantly affect either the quality of the human environment or energy conservation.

Pursuant to 5 U.S.C. 605(b), we conclude that our action will not have a significant economic impact on a substantial number of small entities within the meaning of the Regulatory Flexibility Act.

Decided: March 20, 2009.

By the Board, Chairman Mulvey, and Vice Chairman Nottingham.

Jeffrey Herzig,

Clearance Clerk.

[FR Doc. E9–6622 Filed 3–24–09; 8:45 am]

BILLING CODE 4915–01–P

[1] Since 1989, the cost recovery procedures have required that the quarterly rail cost adjustment factor (RCAF) be adjusted for long-run changes in railroad productivity. The ICC Termination Act of 1995 continues this requirement (49 U.S.C. 10708, as revised). The long-run measure of productivity is computed using a 5-year moving geometric mean. *See Productivity Adjustment-Implementation*, 9 I.C.C.2d 1072 (1993).

Federal Register

Wednesday,
March 25, 2009

Part II

Department of the Interior

Fish and Wildlife Service

50 CFR Part 17

Endangered and Threatened Wildlife and Plants; 12-Month Finding on a Petition To List the Yellow-Billed Loon as Threatened or Endangered; Proposed Rules

DEPARTMENT OF THE INTERIOR

Fish and Wildlife Service

50 CFR Part 17

[FWS–R7–ES–2009–0133; MO9221050083–B2]

Endangered and Threatened Wildlife and Plants; 12-Month Finding on a Petition To List the Yellow-Billed Loon as Threatened or Endangered

AGENCY: Fish and Wildlife Service, Interior.

ACTION: Notice of 12-month petition finding.

SUMMARY: We, the U.S. Fish and Wildlife Service (Service), announce a 12-month finding on a petition to list the yellow-billed loon (*Gavia adamsii*) as threatened or endangered, with critical habitat, under the Endangered Species Act of 1973, as amended (Act). The petitioners provided two listing options for consideration by the Service: (1) Listing the yellow-billed loon throughout its range, or (2) listing the United States population of the yellow-billed loon as a Distinct Population Segment (DPS). After a review of the best available scientific and commercial information, we have determined that listing the yellow-billed loon rangewide under the Act is warranted but precluded by other higher priority listing actions.

DATES: This finding was made on March 25, 2009.

ADDRESSES: This finding is available on the Internet at *http://www.regulations.gov.* Data, information, comments, or questions regarding this notice should be submitted to the Field Supervisor, Endangered Species Branch, Fairbanks Fish and Wildlife Field Office, U.S. Fish and Wildlife Service, 101–12th Ave., Room 110, Fairbanks, AK 99701. The complete administrative file for this finding is available for public inspection, by appointment, during normal business hours at the above address.

FOR FURTHER INFORMATION CONTACT: Mr. Ted Swem, Fairbanks Fish and Wildlife Field Office (see **ADDRESSES**) (telephone 907–456–0441; facsimile 907–456–0208). If you use a telecommunications device for the deaf (TDD), call the Federal Information Relay Service (FIRS) at 800–877–8339.

SUPPLEMENTARY INFORMATION:

Background

Section 4(b)(3)(B) of the Act (16 U.S.C. 1531 *et seq.*) requires that, for any petition presenting substantial scientific and commercial information that listing may be warranted, we make a finding within 12 months of the date of receipt of the petition on whether the petitioned action is: (a) Not warranted, (b) warranted, or (c) warranted, but that immediate proposal of a regulation implementing the petitioned action is precluded by other pending proposals to determine whether species are threatened or endangered, and expeditious progress is being made to add or remove qualified species from the Lists of Endangered and Threatened Wildlife and Plants. Section 4(b)(3)(C) of the Act requires that we treat a petition for which the requested action is found to be warranted but precluded as though resubmitted on the date of such finding, and is, therefore, subject to a new finding to be made within 12 months and subsequently thereafter until we take action on a proposal to list or withdraw our original finding. We must publish these 12-month findings in the **Federal Register**.

Previous Federal Actions

On April 5, 2004, we received a petition from the Center for Biological Diversity (CBD) (Sitka, AK), Natural Resources Defense Council (Washington, DC), Pacific Environment (San Francisco, CA), Trustees for Alaska (Anchorage, AK), Kaira Club (Chukotka, Anadyr, Russia), Kronotsky Nature Preserve (Kamchatka Region, Russia), Taiga Rangers (Khabarovsk Region, Russia), Yuzhno-Sakhalinsk Local Public Fund (Sakhalin Region, Russia), Interregional Public Charitable Organization of Far Eastern Resource Centers (Vladivostok, Russia), Kamchatka Branch of Pacific Institute of Geography (Petropavlovsk-Kamchatsky, Russia), and Kamchatka League of Independent Experts (Petropavlovsk-Kamchatsky, Russia) to list the yellow-billed loon as endangered or threatened throughout its range, or as a Distinct Population Segment in the United States, and to designate critical habitat once listed. The petition summarizes threats to the species based on CBD's review of Fair's (2002) report, prepared for the Natural Resources Defense Council and Trustees for Alaska, on the status and significance of the species in Alaska, as well as CBD's review of the scientific literature. In September 2006, the Service completed a ''Conservation Agreement for the Yellow-billed Loon (*Gavia adamsii*)'' with Federal, State, and local partners. In response to the petition, we published a 90-day finding on the yellow-billed loon in the **Federal Register** on June 6, 2007 (72 FR 31256). In the 90-day finding we determined that the petition presented substantial scientific or commercial information to indicate that a listing may be warranted and announced that a status review would be promptly commenced. In that notice we announced the opening of a 60-day information collection period and invited the public to submit to us any pertinent information concerning the status of or threats to this species. Approximately 28,000 comments were received during the information collection period. We also consulted with recognized yellow-billed loon experts and other Federal and State agencies. We sent letters to national wildlife or natural resource agencies in Canada, China, Japan, North Korea, Norway, Republic of Korea (South Korea), and the Russian Federation, asking for information about ongoing management measures and any conservation and management strategies being developed to protect the species. We received a formal response from the government of Canada, and an informal response from a government biologist in the Russian Federation.

On June 11, 2007, we received a 60-day notice of intent to sue from the Center for Biological Diversity alleging a violation of section 4 of the ESA for failure to complete a 12-month finding on the petition. We informed the plaintiffs by letter dated July 9, 2007, that further action on the petition was precluded by higher priority listing actions but that, pending the fiscal year 2008 allocation of funds, we hoped to complete the 12-month finding within that fiscal year.

On December 19, 2007, the Center for Biological Diversity (CBD) filed a complaint alleging that the Service had failed to make a timely 12-month finding on the petition, as required under section 4 of the ESA. Consistent with a settlement agreement reached between the Service and CBD, the Court ordered the Service to submit this 12-month finding for publication to the **Federal Register** by February 15, 2009. Because the Service later received substantial new information to be evaluated and considered in the 12-month finding, we subsequently sought and were granted a one month extension with a new deadline of March 16, 2009.

This notice constitutes a 12-month finding for the petition to list the yellow-billed loon as threatened or endangered. The petitioners provided two listing options for consideration by the Service: (1) Listing the yellow-billed loon throughout its range, or (2) listing the United States population of the yellow-billed loon as a Distinct Population Segment (DPS). Because we find that listing the yellow-billed loon rangewide is warranted at this time,

there is no need to conduct further analysis of whether listing the United States population of the yellow-billed loon as a DPS, which is a smaller geographic entity than the entire range, is warranted, as this consideration is subsumed by the rangewide warranted but precluded finding.

Outline of This Notice

In this notice, we first provide background information on the biology of the yellow-billed loon. Next, we address each of the categories of factors listed in section 4(a)(1) of the Act. For each factor, we first determine whether any stressors, or risk factors, appear to be negatively affecting yellow-billed loons anywhere within the species' range. If we determine they are, then we evaluate whether each of these risk factors is resulting in population-level effects that are significant to the determination of the conservation status of the species. If so, we describe it as a ''threat.'' The fact that we find a stressor to be a threat to the species does not necessarily mean that the species meets the definition of threatened or endangered. Rather, in the subsequent finding section, we then consider each of the stressors and identified threats, individually and cumulatively, and make a determination with respect to whether the species is endangered or threatened according to the statutory standard.

The term ''threatened species'' means any species (or subspecies or, for vertebrates, distinct population segments) that is likely to become an endangered species within the foreseeable future throughout all or a significant portion of its range. The Act does not define the term ''foreseeable future.'' However, in a January 16, 2009, memorandum addressed to the Acting Director of the U.S. Fish and Wildlife Service, the Office of the Solicitor, Department of the Interior, concluded, ''* * * as used in the ESA, Congress intended the term 'foreseeable future' to describe the extent to which the Secretary can reasonably rely on predictions about the future in making determinations about the future conservation status of the species.'' In a footnote, the memorandum states, ''In this memorandum, references to 'reliable predictions' are not meant to refer to reliability in a statistical sense. Rather, I use the words ''rely'' and ''reliable'' according to their common, non-technical meanings in ordinary usage. Thus, for the purposes of this memorandum, a prediction is reliable if it is reasonable to depend upon it in making decisions'' (M–37021, January 16, 2009).

Species Biology

The yellow-billed loon is a migratory bird. Solitary pairs breed on lakes in the arctic tundra of the United States, Russia, and Canada from June to September. During the remainder of the year the species winters in more southern coastal waters of the Pacific Ocean and the Norway and North Seas. Non-breeding birds remain in marine waters throughout the year, either in wintering areas or offshore from breeding grounds.

The following information regarding the description and natural history of the yellow-billed loon (American Ornithologists' Union 1998, p. 5) has been condensed from the status assessments conducted by North (1994) and Earnst (2004), and updated with information that has become available since then.

Taxonomy and Description

The yellow-billed loon (Order Gaviiformes, Family Gaviidae) is one of the largest of the five loon species and similar in appearance to the common loon (*Gavia immer*). There are no recognized subspecies or geographic variations (American Ornithologists' Union 1998, p. 5). A field characteristic that distinguishes yellow-billed loons from common loons is their larger yellow or ivory-colored bill. Adults weigh 4,000 to 6,000 grams (8.8 to 13.2 pounds) and are 774 to 920 millimeters (30 to 37 inches) in length. Breeding (alternate) plumage of adults of both sexes is black on top with white spots on the wings and underside, and white stripes on the neck. Non-breeding (basic) plumage is gray-brown with fewer and less distinct white spots than breeding plumage, with paler undersides and head, and a blue-gray bill. Hatchlings have dark brown and gray down, and juveniles are gray with a paler head (North 1994, p. 2). Yellow-billed loons are specialized for aquatic foraging with a streamlined shape and legs near the rear of the body, and are unable to take flight from land.

Feeding Habits

Yellow-billed loons forage underwater for fish and aquatic invertebrates. Limited information exists on specific prey species consumed. Marine prey species collected from loons wintering in southeast Alaska and Canada include fish such as sculpins (*Leptocottus armatus, Myoxocephalus* sp.), Pacific tomcod (*Microgadus proximus*), and rock cod (*Sebastodes* sp.), and invertebrates such as amphipods (*Orchomonella* sp., *Anonyx nirgax*), isopods (*Idothea* sp.), shrimps (*Pandalus danae*, *Spirontocaris ochotensis*), hermit crabs (*Pagarus* sp.), and marine worms (*Nereis* sp.) (Bailey 1922, p. 205; Cottam and Knappen 1939, p. 139; North 1994, pp. 6–7; Earnst 2004, pp. 9–10). Pacific sand dabs (*Citharichthys sordidus*) were found in a yellow-billed loon collected extralimitally (*i.e.*, outside the limits of the species' range) in Baja California (Jehl 1970, p. 376) and sculpin (*Myoxocephalus scorpius*) in a specimen collected in Norway (Collett 1894, p. 280). Prey species taken in other wintering grounds, such as in the Yellow Sea (which supports 276 fish species and 54 crustacean species; UNDP 2002, p. 8) are unknown.

During the breeding season, foraging habitats include lakes, rivers, and the nearshore marine environment. Successfully breeding adults feed their young almost entirely from the brood-rearing lake (North 1994, p. 14). Ninespine sticklebacks (*Pungitius pungitius*) and least cisco (*Coregonus sardinella*) are thought to be the main foods of chicks in Alaska (Earnst 2004, p. 9). Other freshwater prey available in Alaska that are likely utilized include Alaska blackfish (*Dallia pectoralis*), fourhorn sculpins (*M. quadricornus*), amphipods, and isopods (Earnst 2004, p. 9), as well as aquatic plant material (Sjölander and Ågren 1976, p. 460). In arctic Russia, limited stomach content analysis indicates sticklebacks, salmon, crustaceans, beetles, and plant vegetation are consumed during the breeding season (Uspenskii 1969, p. 130).

Breeding Habitat and Territories

Yellow-billed loons nest exclusively on margins of lakes in coastal and inland low-lying tundra from 62° to 74° North (N) latitude. Lakes that support breeding loons have abundant fish populations. Studies of yellow-billed loon habitat have identified several characteristics that predict loon presence. These may be indirect measures or correlates of the actual characteristics necessary or preferred by loons, such as fish availability. Predictors of yellow-billed loon presence on a lake include water depths greater than 2 meters (m) or 6.5 feet (ft) allowing for unfrozen water under the ice during winter; large lake areas (at least 13.4 hectares (ha) or 33 acres (ac)); connections to streams that may supply fish; highly convoluted, vegetated, and low-lying shorelines; clear water; and dependable water levels (Earnst *et al.* 2006, pp. 230–233; Stehn *et al.* 2005, pp. 9–10; North 1994, p. 6). Probability of yellow-billed loon presence on a lake increases with the absence of Pacific

loons (*Gavia pacifica*) (Earnst *et al.* 2006, p. 233; Stehn *et al.* 2005, p. 9). Breeding lakes may be near major rivers, but are usually not connected to them, possibly because greater fluctuations associated with river connections may flood nests or cause turbidity that compromises foraging success (North & Ryan 1989, p. 303). Falling water levels may also expose loon nests to increased risk of predation (Kertell 1996, p. 356).

Breeding territories (areas defended against other yellow-billed loons and other loon species, particularly Pacific loons) may include one or more lakes or parts of lakes. Territory size, likely dependent upon lake size and quality, ranged from 13.8 to greater than 100 ha (34 to greater than 247 ac) on the Colville River Delta, Alaska (North 1986, as cited in North 1994, p. 10). It is thought that individual loons occupy the same breeding territory throughout their reproductive life. Some breeding lakes are ''known to be reoccupied over long time spans'' (North 1994, p. 10), most likely by the same monogamous pair (North 1994, p. 10), similar to common loons (Evers 2004, p. 13).

Nesting Sites and Behavior

Nest sites are usually located on islands, hummocks, or peninsulas, along low shorelines, within 1 m (3 ft) of water. The nest location, which may be used in multiple years, usually provides a better view of the surrounding land and water than other available lakeshore locations. Nests are constructed of mud or peat, and are often lined with vegetation. One or two large, smooth, mottled brown eggs are laid in mid-to late June (North 1994, pp. 11–12). Egg replacement after nest predation occurs rarely; unless failure occurs very early in the season, the short arctic summer probably precludes the production or success of replacement clutches (Earnst 2004, p. 8). Hatching occurs after 27 to 28 days of incubation by both sexes. Although the age at which young are capable of flight is unknown, it is probably similar to common loons (8–9, possibly up to 11, weeks). The young leave the nest soon after hatching, and the family may move between natal and brood-rearing lakes. Both males and females participate in feeding and caring for young (North 1994, p. 13).

Life History

There is no reliable scientific information on lifespan and survivorship, but as large-bodied birds with low clutch size, yellow-billed loons are probably K-selected (long-lived and dependent upon high annual adult survival to maintain populations). On average, individuals reach sexual maturity at 3 years of age, but may not acquire breeding territories until at least 4 years of age (North 1994, p. 15). The average age at first breeding for common loons is 6 years (Evers 2004, p. 18).

Territory occupancy and nesting success of yellow-billed loons were studied on the Colville River Delta during 18 years between 1983 and 2007. Ground-based surveys in 1983 and 1984 found 76 and 79 percent of the territorial pairs nesting, respectively (Field *et al.* 1993, p. 329). The same territories studied in 1983 and 1984 were visited in 1989 and 1990, and 42 percent and 67–71 percent, respectively, of the territorial pairs were found nesting (Field *et al.* 1993, p. 329; North 1993, p. 46). Low nest occupancy recorded in 1989 may have been a result of surveys being conducted late in incubation (July 9–16, 1989) after nests of some pairs had already failed; weekly monitoring surveys of nesting yellow-billed loons on the Colville River Delta in 2005–2007 found that 19–36 percent of the nests had failed by July 10–12 of those years (Johnson *et al.* 2006, Table 5; Johnson *et al.* 2007, Table 5; Johnson *et al.* 2008, Table 4). However, low nest occupancy occurred in some years during two long-term studies of yellow-billed loons on the Colville Delta. The percentage of territorial pairs nesting ranged from 39 percent to 89 percent during a 6-year ground-based study (1995–2000; Earnst 2004, p. 9) and from 43 percent to 76 percent (average of 58 percent) during 13-years of aerial surveys (1993–2007; ABR, Inc. 2007, Table 1; ABR, Inc., unpublished data).

Reproductive success, like nest occupancy by territorial pairs, varied on the Colville River Delta. Low reproductive success has been attributed to late ice melt or extreme flooding (Earnst 2004, p. 9). Based on Mayfield survival rates (a technique for measuring nesting success in which the number of days from discovery of the nest to fledging or failure (exposure days) is used to compute a daily nest-survival rate) calculated for yellow-billed loons nesting on the Colville River Delta in 1995–2000, 4 percent to 60 percent of eggs/chicks survived from laying to age 6 weeks (Earnst 2004, p. 9). Apparent nesting success [(broods/nests) × 100] based on broods counted on aerial surveys conducted 8 weeks apart during nesting and brood-rearing ranged from 19 percent to 64 percent annually in 13 years between 1993 and 2007 (ABR, Inc. 2007, Table 1; ABR, Inc., unpublished data). During the last three years (2005–2007) of this study, weekly monitoring surveys were conducted after nests were found. Apparent nesting success calculated from these weekly surveys was 1–10 percent higher than calculations based on nesting and brood-rearing surveys conducted 8 weeks apart, because the more frequent surveys identified nests with chicks that did not survive to 5–6 weeks of age (Johnson *et al.* 2006, p. 17; Johnson *et al.* 2007, p. 16; Johnson *et al.* 2008, p. 15). The highest recorded apparent nesting success on the Colville River Delta was 71 percent in 2007 based on weekly monitoring surveys (Johnson *et al.* 2008, p. 15).

Breeding Distribution

Yellow-billed loons nest near freshwater lakes in arctic tundra of Alaska on the Arctic Coastal Plain (ACP), northwestern Alaska, and St. Lawrence Island; in Canada east of the Mackenzie Delta and west of Hudson Bay; and in Russia on a relatively narrow strip of coastal tundra from the Chukotka Peninsula in the east and on the western Taymyr Peninsula in the west, with a break in distribution between these two areas (Earnst 2004, p. 3; North 1993, p. 42; Red Data Book of the Russian Federation 2001, p. 366; Ryabitsev 2001, p. 22; Il'ichev and Flint 1982, p. 277; Pearce *et al.* 1998, p. 369). Loons are sparsely distributed across their range, although, perhaps because of non-uniform quality of habitat, at a large scale breeding birds are somewhat clumped in distribution.

Breeding Bird Densities

Most of the breeding range of the yellow-billed loon has not been adequately surveyed, and only in Alaska have surveys been conducted specifically for breeding yellow-billed loons. Unless otherwise noted, the following discussion includes data from waterfowl surveys for which loons were not focal species. In these surveys, density estimates were not corrected for visibility bias and so are minimal estimates (*see* discussion in Groves *et al.* 1996, pp. 193–194). Surveys enumerate all yellow-billed loons seen on breeding grounds, including an unknown proportion of which are non-breeders (Earnst *et al.* 2005, p. 300).

Alaska

Based on fixed-wing aerial survey data (1992 to 2003 ACP and North Slope Eider (NSE) surveys conducted by the Service), Earnst *et al.* (2005, p. 300) calculated that most of the population on the ACP of Alaska occurred within concentration areas with more than 0.11 individuals per square kilometer (km^2). Such areas comprised only 12 percent of the surveyed area yet contained 53 percent of yellow-billed loon sightings.

The largest concentration area was between the Meade and Ikpikpuk Rivers; it covered only 8 percent of the survey area, but had 38 percent of yellow-billed loon sightings (Earnst *et al.* 2005, p. 300). Other notable concentrations were on the Colville River Delta and west, southwest, and east of Teshekpuk Lake (Earnst *et al.* 2005, p. 300). In aerial lake-circling surveys designed for yellow-billed loons (fixed-wing aircraft were used 1992–2000; helicopters were used 2001–2007), the average density on the Colville River Delta (363 km^2 (140 mi^2) survey area) was 0.13 individuals per km^2 during 10 years from 1993 to 2004 (Johnson *et al.* 2005, p. 65), and 0.15 to 0.17 individuals per km^2 from 2005 to 2007 (Johnson *et al.* 2006, p. 15; Johnson *et al.* 2007, p. 16; Johnson *et al.* 2008, p. 15). Similar surveys for yellow-billed loons in a larger area (878 km^2) (339 mi^2) in the Northeast Planning Area (NE) of the National Petroleum Reserve-Alaska (NPR–A) in 2001–2004 indicated densities there were lower (0.07 individuals/km^2; Johnson *et al.* 2005, p. 68), except that the density in an area adjacent to Fish and Judy Creeks was similar to that of the Colville River Delta (Johnson *et al.* 2005, p. 68; Johnson *et al.* 2006, p. 15; Johnson *et al.* 2007, p. 16). In western Alaska, where fixed-wing aerial surveys were also designed specifically for loons, density on the northern Seward Peninsula averaged 0.058 (standard error (SE)=0.011; standard error is a measure of the variability in the data) individuals/km^2 over 2 years (Bollinger *et al.* 2008, p. 5).

Canada

In Canada, concentrations are found on parts of Victoria and Banks Islands, on the mainland, the Kent Peninsula, east of Bathhurst Inlet and west of Ellice River, the west side of Boothia Peninsula, and the lake district between Great Slave Lake and Baker Lake, including the Thelon Game Sanctuary (North 1993, p. 42). Densities obtained in 2005 and 2007 from fixed-winged aerial waterfowl surveys on southern Victoria Island and the Kent Peninsula ranged from 0.017 to 0.16 birds/km^2 (Conant *et al.* 2006, pp. 2, 7; Groves in litt. 2008); lower densities (0.004–0.027 birds/km^2) were found in surveys on the Queen Maud Gulf Migratory Bird Sanctuary, King William Island, Rasmussen Lowlands, and Kugluktuk (Conant *et al.* 2007, pp. 10, 12; Groves in litt. 2008). On western Victoria Island, Raven and Dickson (2006, p. 24) estimated densities from 0.004 to 0.08 birds/km^2 from helicopter-based waterfowl surveys. Hines (in litt. 2008) estimated 0.01 yellow-billed loons/km^2 on Banks Island from helicopter-based waterfowl surveys in 1992 and 1993.

Russia

In Russia, breeding concentrations have been identified on the Chukotka (Chukotskiy) Peninsula (Il'ichev and Flint 1982, p. 280; Solovyov 1992, p. 21), Kyttyk Peninsula and Ayon Island in western Chukotka (Solovyova 2007, p. 6), and the western Taymyr Peninsula (Krechmar 1966, p. 200; Il'ichev and Flint 1982, p. 277). Hodges and Eldridge (2001, pp. 141–142), using fixed-winged aircraft in the only aerial waterfowl survey of the eastern Siberian coast, found concentrations of approximately 0.01 birds/km^2 on the Cape Schmidt coast of the Chukotka Peninsula, between the Indigirka and Yana River Deltas, and between the Indigirka and Kolyma Deltas. Post-breeding density on Kyttyk Peninsula in western Chukotka was approximately 0.52 birds/km^2 (including young birds) during late July–August 2003–2007 (calculated from ground surveys, Solovyova 2007, p. 6). No density estimates are available for the Taymyr Peninsula.

Nest Densities

Nest density on 363 km^2 (140 mi^2) of the Colville River Delta, Alaska, ranged from 0.03 to 0.08 nests/km^2 during 13 years of aerial surveys for yellow-billed loons during 1993–2007 (Johnson *et al.* 1999, p. 44; Burgess *et al.* 2003, p. 36; Johnson *et al.* 2003, p. 43; Johnson *et al.* 2004, p. 74; Johnson *et al.* 2005, p. 64; Johnson *et al.* 2006, p. 15; Johnson *et al.* 2007, p. 16; Johnson *et al.* 2008, p. 15). Nest density in an 878 km^2 (339 mi^2) survey area of NE NPR–A was 0.03 nests/km^2 in each year during 2002–2004. Higher densities within this area were found along Fish and Judy Creeks (helicopter-based surveys; Johnson *et al.* 2005, p. 68). In Russia, Solovyov (1992) reported 0.18 nests/km^2 on a 27.6 km^2 (10.6 mi^2) plot searched from the ground on Belyaka Spit near Kolyuchin Bay on the Chukotka Peninsula. On the Kyttyk Peninsula in western Chukotka, yellow-billed loons nest on approximately 25 percent of lakes larger than 4 ha (9.9 acres) (Solovyova 2007, p. 6).

Foraging Distribution During Breeding Season

Yellow-billed loons use nearshore and offshore marine waters adjacent to their breeding areas for foraging in summer. Such habitats are likely used by both breeding adults and younger or non-territorial birds (Earnst 2004, p. 7). Earnst (2004, pp. 6–7) reviewed yellow-billed loon distribution information from fixed-wing aerial waterfowl surveys that Fischer *et al.* (2002) conducted in 1999 and 2000 off the coasts of Canada's arctic islands and the ACP of Alaska between Cape Halkett and Brownlow Point. Similar surveys conducted between Barrow and Demarcation Point in 2001 also included yellow-billed loon observations in Elson Lagoon (Fischer 2001, p. 4; Fischer and Larned 2004, p. 146). During fixed-wing aerial surveys for common eiders in late June of 1999 through 2007, between 23 and 99 yellow-billed loons were observed in nearshore waters and along barrier islands of the Beaufort and Chukchi Seas (Dau and Larned 2007, p. 18). Yellow-billed loons used lagoons and nearshore waters along the coast of St. Lawrence Island in summer in the 1950s (Fay and Cade 1959, pp. 92, 100). In Russia, Solovyova (coastal boat surveys; 2007, p. 6) reported densities of 0.24 birds/km^2 using coastal waters near the Kyttyk Peninsula and Ayon Island at the northern end of Chaun Bay in western Chukotka, and 0.04 birds/km^2 at the southern end of Chaun Bay near the Chaun River Delta in 2006. Vronskiy (1987, p. 30) observed individual yellow-billed loons and pairs in bays 100–150 m (328–492 ft) offshore of northwestern Taymyr during summer. Yellow-billed loons occurred in summer along the coast of Wrangel Island, although there were no indications of nesting on the island (Stishov *et al.* 1991, p. 20). In boat-based surveys in the Kara and Barents Seas, arctic (*Gavia arctica*) and red-throated (*G. stellata*) loons were abundant in the nearshore marine waters of the western Kara Sea and in the Ob' and Yenisey estuaries, especially in Baidaratskaya Bay, and occurred in smaller numbers in the Pechora Bay in the Barents Sea in August and September 1995, but no yellow-billed loons were observed (Decker *et al.* 1998, pp. 9, 11). In subsequent boat surveys between 1998 and 2003, only one yellow-billed loon was observed in mid-August 1998 in coastal waters northeast of Dolgy Island (west of Vaigach Island) in the Pechora Sea (M. Gavrilo, in litt. 2008).

Wintering Habitat and Distribution

Wintering habitats include sheltered marine waters less than 30 m (98.4 ft) deep, such as fiords and areas between islands on the inner coast in Norway (Strann and Østnes 2007, p. 2). Schmutz (2008, p. 1) found that throughout migrating and wintering seasons, yellow-billed loons marked with satellite transmitters occurred from 1 to 20 miles offshore. The wintering range includes coastal waters of southern Alaska and British Columbia from the Aleutian Islands to Puget Sound; the

Pacific coast of Asia from the Sea of Okhotsk south to the Yellow Sea; the Barents Sea and the coast of the Kola Peninsula; coastal waters of Norway; and possibly Great Britain (Earnst 2004, pp. 13–14; North 1993, pp. 42–43; Ryabitsev 2001, p. 22; Schmutz in litt. 2008, p. 1; Strann and Østnes 2007, p. 2; Burn and Mather 1974, p. 278; Gibson and Byrd 2007, p. 68). A small proportion of yellow-billed loons may winter in interior lakes or reservoirs in North America (North 1994, p. 3).

Winter population distribution and numbers of yellow-billed loons are not well documented, but some information is available from marine bird surveys. Earnst (2004, p. 14) summarized loon observations in boat-based marine bird population surveys in Lower Cook Inlet, Prince William Sound, and Kodiak Island. In these surveys, estimates of yellow-billed loons were in tens to low hundreds, with wide confidence limits. In many cases, loons were not identified to species. Strann and Østnes (2007, p. 3) counted 1,160–1,605 yellow-billed loons on surveys conducted off the coast of Norway from 1986 to 1994, confirming Norway as the most important known wintering area for the species in Europe. No surveys have been conducted in Asian wintering areas. In some regularly used wintering areas such as the Yellow Sea, the Aleutian Islands, and Great Britain, the yellow-billed loon's small population and scattered marine distribution may have contributed to the impression that yellow-billed loons are vagrants or rare visitors (Lepage 2008, p. 1; Gibson and Byrd 2007, p. 68; Dudley *et al.* 2006, p. 533; Scott and Shaw 2008, pp. 241–248).

Immature loons and possibly some non-breeding adults stay in wintering areas throughout the year (North 1994, p. 4). Earnst (2004, pp. 11–12) summarized yellow-billed loon observations in summer marine boat-based surveys conducted in lower Cook Inlet and Prince William Sound in southcentral Alaska, and in southeast Alaska. Estimates from all these surveys totaled only 339 yellow-billed loons, but many loons were not identified to species (Earnst 2004, p. 11). In boat-based surveys of murrelets conducted in July of 2002–2004 from Icy Bay to LeConte Bay in southeast Alaska, Kissling *et al.* (2007, Appendices 7, 8) counted 20 yellow-billed loons. Yellow-billed loons have been observed throughout summer months in the Aleutians (Gibson and Byrd 2007, p. 68). According to the Red Data Book of Kamchatka (2006, p. 92), non-breeding birds occur off the coast of Kamchatka in summer.

Migration

Yellow-billed loon migration routes are thought to be primarily marine. Schmutz (in litt. 2008, p. 1) found that yellow-billed loons marked with satellite transmitters generally remained between 1 and 20 miles from land during migration and winter. Yellow-billed loons migrate singly or in pairs, but gather in polynyas (areas of open water at predictable, recurrent locations in sea-ice covered regions), ice leads (more ephemeral breaks in sea ice, often along coastlines), and early-melting areas off river deltas near breeding grounds in spring along the Beaufort Sea coast of Alaska and Canada (Barry *et al.* 1981, pp. 29–30; Barry and Barry 1982, p. 25; Woodby and Divoky 1982, p. 406; Johnson and Herter, 1989, p. 9; Barr 1997, pp. 12–13; Alexander *et al.* 1997, pp. 15, 17; Mallory and Fontaine 2004, pp. 52–53).

These observations of yellow-billed loons in the Beaufort Sea during migration establish that at least some yellow-billed loons breeding in Canada's Arctic Islands and along the adjacent Canadian coast use this migration route. North (1993, pp. 45–46) examined evidence of alternative migration routes for yellow-billed loons wintering in southeast Alaska and British Columbia, suggesting that they could migrate overland to mainland breeding areas in Canada, particularly around Great Slave Lake. Yellow-billed loons have been observed on inland lakes in Canada and Alaska (North 1993, pp. 43, 46). The existence of this route is still hypothetical, and the number of yellow-billed loons in interior mainland Canada is highly uncertain (discussed below under Population Size).

Yellow-billed loons breeding in Alaska have been studied to determine migration routes. Nineteen yellow-billed loons captured on the ACP between 2002 and 2008 were outfitted with satellite transmitters (Schmutz in litt. 2008, p. 1). All of them migrated to Asia, predominantly south along the Russian coastline from the Chukotka Peninsula (either through the Bering Strait or across the mountains from the north side of the Chukotka Peninsula to the Gulf of Anadyr), and along the Kamchatka coast. They wintered in the Yellow Sea and Sea of Japan off China, North Korea, Russia, and Japan (near Hokkaido). All 10 yellow-billed loons fitted with transmitters on the Seward Peninsula, Alaska, in 2007 and 2008 also used the Bering Strait region after leaving breeding grounds. Five of these migrated to Asian grounds as described above for ACP breeding birds; the other 5 wintered throughout the Aleutian Islands from Shemya Island in the west to the Semidi Islands off the coast of the Alaska Peninsula (Schmutz in litt. 2008, p. 1). Most of these yellow-billed loons departed breeding areas in late September, arrived in wintering locations in mid-November, started spring migration in April, and arrived on breeding grounds in the first half of June; these dates are consistent with breeding ground arrival dates reported by North (1994, p. 5). Non-breeders or failed nesters may start fall migration in July.

The migration routes of yellow-billed loons breeding in Russia have not been studied. Because of the proximity of the Chukotka Peninsula to the ACP in Alaska, and the fact that ACP breeding yellow-billed loons use the Chukotka Peninsula during migration (Schmutz in litt. 2008, p. 1), it is likely that some or all yellow-billed loons from eastern Russia migrate through the Bering Strait to Asian wintering areas.

Population Size

ACP, Alaska

Yellow-billed loon population indices on the ACP of Alaska were determined by two independent fixed-wing aerial transect surveys conducted each year by the Service's Migratory Bird Management program. Surveys were flown in early June each year from 1992 through 2008 (NSE survey, 1992–2008, an average of 1,304 km^2 (503.5 mi^2) transect area that sampled a total area of 30,465 km^2 (11,763 mi^2), for 4.3 percent coverage) and late June each year from 1986 through 2006 (ACP survey, 1986–2006, average of 1,256 km^2 (485 mi^2) transect area which sampled a total area 61,645 km^2 (23,801 mi^2), for 2.0 percent coverage of a larger area than that covered by the NSE survey). The average population index from the NSE survey is 1,119 yellow-billed loons (95 percent confidence interval (CI) = 1,012 to 1,226, Larned *et al.* 2009, p. 24). (Note: In order to estimate the reliability of a sample statistic, such as an average, it is common to set confidence limits to it (Sokal and Rohlf 1995, p. 139). The limits will show the maximum and minimum numbers the statistic (e.g., average) is likely to be, along with a measure of that likelihood (e.g., 95 percent). So, when an average number of birds, for example, is reported, followed by a confidence interval, the confidence interval shows the statistical range of values that provides cutoff points for the likely values for the average.) The long-term mean from the ACP survey is 2,611 loons (95 percent CI = 2,218 to 3,005; Mallek *et al.* 2007, p. 10; USFWS unpublished data). The

confidence intervals around these 16- and 21-year means incorporate the variation due to within-year sampling error, the spatial variability among transects and within strata, and variation among years related either to detection rate (observer ability, habitat change, weather conditions) or the availability of birds to be seen (arrival or departure of population components, behavior associated with nesting chronology). One study integrated results from both the early and late surveys, incorporating covariates adjusting for detection rates (Earnst *et al.* 2005). The 12-year mean (1992 through 2003) resulted in an estimate of 2,221 individuals (95 percent CI = 1,209–3,233) in early June and 3,369 individuals (95 percent CI = 1,910–4,828) in late June (Earnst *et al.* 2005, p. 295). Another estimate of population size was determined by lake-circling aerial searches of greater than 7-ha (17.3-acre) lakes on 7 × 7-km (4.35 × 4.35-mi) plots as part of a 2003–2004 study of yellow-billed loon habitat preferences (Stehn *et al.* 2005, pp. 1–37). This survey was flown from June 15 through 22 each year. Based on average density observed, the estimated total population index was 2,544 (95 percent CI = 1,780–3,308) yellow-billed loons (Stehn in litt. 2008, p. 1).

Western Alaska

Seward Peninsula and Cape Krusenstern fixed-wing aerial lake-circling surveys, on 12 × 12-km (7.46 × 7.46-mi) sample plots, were flown in June of 2005 and 2007, and resulted in an estimate of 431 (95 percent CI = 280–582) yellow-billed loons on these western Alaska breeding grounds (Bollinger *et al.* 2008, p. 1). Additional aerial transects sampling an area of 15,234 km^2 (5,882 mi^2) were flown on Selawik National Wildlife Refuge and adjacent wetlands in June in the years 1996 and 1997 (Platte 1999, p. 3), but only three yellow-billed loons were sighted, resulting in an estimated mean population index of 44 birds (95 percent CI = 0–95) (USFWS unpublished data). Yellow-billed loons were documented nesting on St. Lawrence Island in the 1950s (Fay and Cade 1959, pp. 84, 100), but there is no more recent information. Adding western Alaska population figures to those from the ACP results in an estimated total of 3,000 to 4,000 yellow-billed loons on breeding grounds in Alaska.

Canada

Although overall breeding population estimates for yellow-billed loons in Canada do not exist (*http://www.bsc-eoc.org/clls-bw1.html*, accessed May 19, 2008), and yellow-billed loons are not summarized in the Waterfowl Population Status annual reports compiled by the U.S. and Canadian governments for North American Waterfowl (USFWS 2007, pp. 1–62), several recent fixed-wing aerial waterfowl surveys included loon observations in parts of Nunavut and Northwest Territories. Loons were not the focus of the surveys, so it is possible that observer effort or identification ability varied, and no visibility correction factors or seasonal timing factors were applied. Helicopter surveys yielded estimates ranging from 659 (SE 359) to 1,784 (SE 502) on northwest Victoria Island, and from 98 (SE 70) to 258 (SE 146) birds in the southwest part of the island (Raven and Dickson 2006). A fixed-winged survey included Kent Peninsula and southeastern Victoria Island in 2005, and Queen Maud Gulf, King William Island, Rasmussen Lowlands, and near Kugluktuk in 2006; all areas from both years were repeated in 2007 but with fewer transects sampled per unit area. The combined estimate for both areas from 2005–2006 fixed-winged surveys and the 2007 estimate were similar, at 2,500–3,000 birds (Conant *et al.* 2006, p. 7; Conant *et al.* 2007, p. 12; Groves in litt. 2008). Hines (in litt. 2008) estimated there were 500–1,000 yellow-billed loons on Banks Island, based on helicopter aerial surveys conducted in 1992 and 1993. The range of these point estimates suggests that between 3,750–6,000 birds occur on breeding grounds in the surveyed areas.

The rest of the yellow-billed loon's range on the Canadian mainland has not been surveyed. Based on the vast number of large, fish-bearing lakes north of treeline (an area of 500,000–750,000 km^2) (193,051–289,577 mi^2) minus the surveyed areas on the mainland (46,000 km^2), (17,761 mi^2) and using opportunistic observations of yellow-billed loons by Northwest Territory and Nunavut checklist survey cooperators over the last decade, Poter (in litt. 2008, p. 2, adjusted from Hines in litt. 2008, p. 1) calculated that a density of 0.01–0.02 birds/km^2 would yield an estimate of 4,500–14,000 birds in mainland breeding areas in Canada, not including surveyed areas in the arctic described in the previous paragraph. This estimate is based on a very large land area bounded at the southern end by an area of documented yellow-billed loon breeding between Great Slave Lake and Baker Lake, particularly in or near the Thelon Game Sanctuary (North 1993, p. 42). Between this area and the arctic coast is a large area where breeding has not been documented (North 1993, Figure 2). Fair (2002, p. 30) estimated the yellow-billed loon population on interior Canadian breeding grounds to be 4,800, using a density of 0.02 loons in a 100,000 km^2 area around the Sanctuary, and a lower density of 0.007 for the wider area of 400,000 km^2. Fair's estimate of 4,800 is close to the lower end of Poter's (2008, p. 1) estimate of 4,500. We believe Fair's analysis more accurately reflects likely yellow-billed loon distribution in Canada, because it reflects a lower average density for the large area where breeding has not been documented. Combining the 4,500 to 14,000 breeding birds estimated for interior Canada, and 3,750 to 6,000 breeding birds estimated for the arctic (and rounding to thousands), we conclude that the Canadian breeding population size is 8,000 to 20,000, but that it is most likely at the lower end of this range.

Russia

Information on the breeding-ground population size of yellow-billed loons for Russia is limited. Hodges and Eldridge (2001, Appendix 2) estimated 674 yellow-billed loons (coefficient of variation (C.V., a measure of dispersion in a probability distribution) 0.55) in a 157,611-km^2 (60,854–mi^2) fixed-wing aerial survey area of the eastern Siberia arctic coast from Kolyuchin Bay to the Lena River Delta. We know of no other loon surveys within the breeding range of the yellow-billed loon in Russia. Red Data Books for the Russian Federation (2001, pp. 366–367), Yakutia (1987, p. 33), and the Northern Far East of Russia (1998, pp. 97–98) do not offer population estimates. Kondratiev (1989, p. 37) estimated that 2,000 birds nested in Chukotka, but did not give a basis or sources for his estimate. Fair (2002, p. 31) projected, based on this estimate of 2,000 birds in Chukotka (Kondratiev 1989, p. 37), that another 2,000 nested on the Taymyr Peninsula, and that perhaps another 1,000 were scattered across the arctic coast, giving 5,000 birds on Russian breeding areas. Syroechkovsky (in litt. 2008) suggested (based on field observations but not scientific surveys) that the number of birds on breeding grounds (including non-breeding birds) is around 3,000 for Chukotka, 500 for Yakutia, and about 1,200 for Taymyr, for a total of around 4,700 birds. However, Solovyova (in. litt. 2008, p. 1; calculated from Solovyova 2007, p. 6) recently estimated the post-breeding population of the Kyttyk Peninsula on Chaun Bay in western Chukotka at 1,000, and the post-breeding population of nearby Ayon Island at 900 birds. Given

Solovyova's (in. litt. 2008, p. 1) estimates for her study area in Chukotka, she estimated that the total breeding ground population in Chukotka might be as high as 5,000 birds. If the Chukotka population is 5,000, the total for Russia could be as high as 8,000 based on habitat availability. Thus, our best information suggests the Russian breeding population is between 5,000 and 8,000 birds.

In summary, the global breeding ground population size for yellow-billed loons is unknown, but probably at the lower end of the range of 16,000 to 32,000. The Alaska population estimate of 3,000 to 4,000 is derived from surveys. Less certain estimates based on the amount of available habitat (plus limited survey data) are the lower end of the range of 8,000 to 20,000 birds in Canada, and 5,000 to 8,000 in Russia.

Population Trend

Alaska

The only population trends available for yellow-billed loons breeding in Alaska are on the ACP, where the ACP and NSE waterfowl surveys are conducted. We note that because we count only the breeding component of the population, the total population could decline without being detected for a number of years. This could occur because increased mortality of breeding birds could be masked by movements of birds without territories (either sub-adult birds or adults which have not found territories) into vacated territories. With this caution, we believe the time series of at least 17 years for the surveys described below gives us a reasonably reliable data set for observing population trends, and these data represent the best information available at this time.

A population growth rate, or lambda, less than 1.00 would indicate population decline (negative ''growth''), while a lambda greater than 1.00 would indicate population growth. For the ACP survey 1986–2006, the average growth rate was 0.9886 (95 percent CI = 0.9625–1.0154) (Mallek *et al.* 2007, p. 21), and for the NSE survey 1992–2008 (a smaller area than that covered by the ACP survey, and surveyed earlier in June), the average growth rate was 1.016 (95 percent CI = 0.995–1.036) (calculated from Larned *et al.* 2009, Figure 1). Thus, these surveys provide slightly conflicting perspectives, with one suggesting a stable or slightly declining population (with a point estimate of a decline of 1.1 percent/yr.) and the other suggesting a stable or slight increasing population (with a point estimate of an increase of 1.6 percent/yr.) on the ACP.

Earnst *et al.* (2005, pp. 289–304) sought to improve the estimates above by using a statistical model that takes into account possible confounding factors of survey type, spring timing, and observer experience. They used this model to analyze ACP and NSE survey data through 2003. Controlling for these confounding factors, they (p. 298) estimated average population growth rate to be 0.991 (95 percent CI = 0.964–1.018), also indicating a stable or slightly declining population.

We also examined a subset of the NSE data through 2008 that included only the observations of the most consistent and experienced pilot-observer, who has flown all 16 early-June NSE surveys during 1992–2008. Each survey includes observations of two observers: the pilot-observer in the left-side seat of the aircraft, and a second observer in the right-side seat. There have been numerous ''right-side observers'' over the course of the NSE survey. Each of these observers has a different ability to see and identify birds, and this ability often increases over successive surveys as the observer gains experience. Our analysis of the left-side pilot-observer eliminated the necessity to estimate the variable magnitudes of influence of right-side observer experience. In addition, the increased interest in yellow-billed loons in 2002 may have influenced new right-side observers to search more intensively for yellow-billed loons than earlier observers, who focused on waterfowl. Our analysis of the pilot-observer data from the NSE survey also eliminated the need to reconcile the later timing and different survey extent of the ACP survey. The average growth rate using this subset of data was slightly lower and more precisely estimated at 0.986 (95 percent CI = 0.967–1.006) (USFWS unpublished data) than the estimate of 0.991 from Earnst *et al.*'s (2005, p. 298) model, and the results also indicate a relatively stable or slightly declining population.

In summary, the information available from the ACP does not allow us to precisely determine current population trends. Two surveys and multiple analytical approaches used to control for confounding factors provide estimates indicating trends ranging from slightly increasing to slightly decreasing, and all estimates have 95 percent CIs that include a lambda of 1.0, indicating that possible trends cannot be distinguished from population stability with reasonable certainty. Although the population trend on the ACP is uncertain, we conclude that the number of breeding yellow-billed loons on the ACP breeding grounds is either stable or declining slightly, with point estimates from models controlling for confounding factors estimating decline on the order of ~1 percent per year. We will continue to look for ways to improve our ability to detect trends. Surveys in western Alaska have not been conducted for a long enough period (2005 and 2007) to detect trends.

Russia

In Russia, recent data are fragmentary, making it difficult to determine trends. In the west, the Red Data Book of the Russian Federation (2001, p. 366) stated that the species no longer nests in European Russia where it was formerly found, such as the Kola Peninsula, the archipelago of Novaya Zemlya, and Vaigach and Ainovy Islands in the Kara Sea, although it is unclear how abundant or widespread the species was in these areas historically. (However, Kalyakin (2001, p. 10) reports finding it nesting on Novaya Zemlya, although it is ''extremely rare.'') Similarly, according to the Red Data Book of the Yamal-Nenets Autonomous District (1997) near the western end of the Russian breeding range, in the previous 20 years only a few non-breeding yellow-billed loons were recorded in the District. Strann (in litt. 2008) speculated that since the early 1990s there may have been a decline in the number of yellow-billed loons in the main Norway wintering area, which would be consistent with a western Russian breeding ground range contraction if birds nesting in western Russia migrate to Norway for winter (which seems logical). We were unable to find either the source of the Red Data Book statements or supporting evidence for this potential range contraction. In eastern Russia, yellow-billed loons apparently no longer nest along the northern coast of the Sea of Okhotsk where they occurred 30–50 years ago, nor on the Anadyr River delta (Red Data Book of the Russian Federation 2001, p. 366; Red Data Book of the Northern Far East of Russia 1998, p. 97). However, Solovyova (in litt. 2008) reported that the number of breeding yellow-billed loons may be increasing in some locations in eastern Siberia, specifically near Chaun Bay in western Chukotka, and at Belyaka Spit near Kolyuchin Bay in northeastern Chukotka.

In summary, we found unsubstantiated reports that the species may no longer be found in parts of its historical range in Russia, but there is somewhat contradictory information for some areas and a lack of survey data for all areas. Yellow-billed loons may also be increasing in some areas in Russia.

We conclude that we do not have reliable trend information for the Russian breeding grounds.

Canada

As described above for Population Size, survey data for Canadian breeding grounds cover a small portion of the range, and have not been conducted for enough years to analyze trends. We conclude that we do not have reliable trend information for Canadian breeding grounds.

To summarize rangewide population trend information, we have reliable data indicating that the ACP breeding population is stable or slightly declining. We do not have reliable evidence from other breeding areas that breeding populations are increasing or decreasing. There have been no surveys of yellow-billed loons on wintering areas, so we have no trend information from those areas.

Population Resiliency

Certain intrinsic aspects of yellow-billed loon ecology and demography, including low and variable productivity, adult survival, and low population numbers, are relevant to the species' status. Stable populations of K-selected species, such as the yellow-billed loon, are characterized by low annual productivity rates balanced with high annual survival rates, meaning that individuals must live many years to replace themselves with offspring that survive to recruit into the breeding population. Low productivity means that depleted K-selected species have lower recovery potential and slower recovery rates following population declines than r-selected species, which are characterized by high annual productivity. Factors that reduce productivity, including loss of productive breeding habitats, reduction in prey populations, and increases in nest predators, may further constrain K-selected species' recovery potential. Further, most arctic species are characterized by variable annual productivity, given the vagaries and severity of arctic weather, fluctuations in predator-prey relationships, and other aspects of arctic ecology. The population impact of threats that reduce productivity could be magnified if coincident with an infrequent year of otherwise high productivity.

Although factors that compromise productivity can cause populations to decline, adult survival is likely the more important determinant of K-selected species' population size and persistence (Smith and Smith 2001, p. 235). If enough adults are removed from the population prior to replacing themselves (i.e., adult survival is decreased), the population will decline. Perhaps most pertinent to a discussion of extinction, rare species—those with low numbers—are intrinsically closer to a threshold below which recovery is not possible (i.e., minimum viable population) (Hunter 1996, p. 137).

These intrinsic aspects of yellow-billed loon ecology and demography signal the continuing need to monitor yellow-billed loon populations, despite the fact that the species continues to be widely distributed across both its arctic breeding range, which is nearly holarctic, and in its wintering range.

Factors Affecting the Yellow-Billed Loon

Section 4(a)(1) of the Act (16 U.S.C. 1533(a)(1)) and regulations promulgated to implement the listing provisions of the Act (50 CFR part 424) set forth the procedures for adding species to the Federal Lists of Endangered and Threatened Wildlife and Plants. A species may be determined to be an endangered or threatened species due to one or more of the five factors described in section 4(a)(1) of the Act. Below, we provide a summary of our analysis of threats to the yellow-billed loon.

Factor A: Present or Threatened Destruction, Modification, or Curtailment of the Habitat or Range

We considered whether yellow-billed loon habitats are threatened by oil and gas development (including disturbance, changes in freshwater chemistry and pollutant loads, and changes in freshwater hydrology), by degradation of the marine environment from pollution or overfishing, or by climate change. Potential threats from oil and gas development are addressed by the petitioners under Factor E, but are discussed here under Factor A because they are potential mechanisms for rendering breeding habitats unsuitable. Potential direct impacts on loon mortality associated with development, such as increased predation and oil spills, are discussed under Factors C and E, respectively.

Terrestrial Oil and Gas Development

Terrestrial and marine oil and gas development occurs in the range of the yellow-billed loon. Here we discuss terrestrial development in Alaskan and Russian breeding grounds. We are not aware of any terrestrial oil or gas development within the breeding range of the yellow-billed loon in Canada; planned terrestrial development on the Mackenzie River Delta is outside the breeding range, although activity there could affect loons migrating through adjacent marine waters. Marine activities related to oil and gas development are discussed under Factor E.

Much of the yellow-billed loon's breeding habitat in Alaska is within areas available for oil and gas leasing and development. Approximately three-quarters of the yellow-billed loons that nest in Alaska, and over 90 percent of those that nest on Alaska's ACP, occur within the 9.5-million-ha (23.5-million-ac) NPR–A (Earnst *et al.* 2005, p. 300), in areas that are leased or available for leasing for oil and gas exploration and development. Approximately 29 percent of yellow-billed loons breeding on the ACP nest in NPR–A tracts that have been leased (Stehn and Platte, U.S. Fish and Wildlife Service, in litt. 2008, p. 1), and 25 exploration wells were drilled during the period 2000–2007 (*http://www.blm.gov/ak/st/en/prog/energy/oil_gas/npra.html*, accessed 3 June 2008). The Northwest Planning Area (NW) NPR–A Integrated Activity Plan/Environmental Impact Statement Record of Decision (ROD) (USDOI–BLM 2004a, p. 5) has made 100 percent of the NW NPR–A available for leasing. The Final NE NPR–A Supplemental Integrated Activity Plan/Environmental Impact Statement ROD (USDOI–BLM 2008b, p. 1) allows leasing of 86 percent (1.6 million ha, or 3.94 million ac) of the NE NPR–A immediately, and an additional 9 percent beginning in 2018. Virtually all yellow-billed loon breeding habitat in the NE NPR–A is within areas currently available for leasing (USDOI–BLM 2008a, Volume 6, Maps 2–4 and 3–10).

If offshore development occurs in the Chukchi Sea, it is anticipated that a 500-km (300-mi) oil pipeline will be built across the NPR–A from the coast between Icy Cape and Point Belcher to the Trans-Alaska Pipeline (USMMS 2008, p. IV–10). The State of Alaska also leases rights to oil and gas development on its land, including the Colville River Delta (ADNR 2008, p. 1), where development has already occurred within the range and habitats of the yellow-billed loon (ADNR 2008, p.1). Thus, as a result of past and possible future oil and gas lease sales, and ongoing exploratory efforts, a significant portion of the yellow-billed loon's breeding habitat in NPR–A is subject to potential oil and gas development. Additionally, resource development in adjacent offshore areas may result in the construction of pipelines across breeding habitat in NPR–A.

Although lease sales and exploratory efforts set the stage for possible future development in yellow-billed loon breeding habitat in northern Alaska,

determining the likelihood and timing of eventual development is difficult. In northeast NPR–A, several satellite production pads associated with existing infrastructure and facilities outside NPR–A at the Alpine field on the Colville River delta are in various stages of planning, permitting, and construction. It is very likely that within the next 10 to 20 years at least 5 to 7 satellite production pads feeding the existing central processing facility will be in operation, with some pads on State lands on the delta and some on adjacent Federal lands in NPR–A. Elsewhere in NPR–A the likelihood and timing of possible future development are more difficult to predict. BLM estimates that exploratory activities take roughly 10 years before construction begins (USDOI–BLM 2008c, p. 13), with roughly 70 years from the initiation of exploration until final field abandonment. Initial exploratory activities have commenced in some areas in NPR–A; exploration has yet to begin on some existing leased tracts elsewhere; and other lands have not yet been leased or offered for lease. Thus, yellow-billed loon habitat in the Colville River delta and adjacent NPR–A varies in its potential for future oil and gas development, and the timing of development, where it occurs, will be staggered starting with imminent development on and near the Colville River delta, followed by exploration, construction, and production over a period of several decades elsewhere, persisting for at least 70 years and possibly longer in various areas.

Terrestrial oil development is ongoing, and likely to increase, at the western edge of Russian yellow-billed loon breeding range. These areas have never been systematically surveyed for loons, so the historical occurrence and degree to which development areas overlaps areas used by loons is unknown. On the Yamal Peninsula, the largest gas field is the Bovanenkovskeo field, which is projected, beginning in 2011, to produce approximately 115 billion cubic meters (4 trillion cubic ft) of gas, which will be transported by new railways and a 2,451-km (1,523-mi) long pipeline currently under construction (Barents Observer 2008, p. 1). A liquefied-natural-gas plant is planned on the Kara Sea coast of the peninsula. The Yuzhnoe-Khykchuyu oil field in the Timan-Pechora province near the port of Varandey on the Pechora Sea is among the largest in Russia, and is planned as an anchor field for further development (ConocoPhillips 2008, p. 1). Major western Siberian oil fields in the Pechora River basin of the Komi Republic have operated for decades upstream of yellow-billed loon breeding range, and a large mining industry operates out of Norilsk on the Taymyr Peninsula. Gazprom, Russia's largest oil and gas company, is developing new discoveries in Chukotka near Anadyr (Gazprom Neft 2004, p. 1). In addition to these activities at the western edge of the Russian breeding area, reserves exist but are not currently planned for development in the Laptev formation on the arctic coast east of the Lena River (USGS 2007, pp. 1–2).

We are not aware of any yellow-billed loon surveys in the Taymyr, Timan-Pechora, and Yamal districts described above; so we do not know whether or to what extent yellow-billed loon breeding habitat overlaps with zones of industrial activity in this area. It is possible that the reported potential contraction at the western edge of the yellow-billed loon's range in Russia (Red Data Book of the Russian Federation 2001, p. 366) could have resulted from the effects of resource extraction in the region, but we have no evidence for or against this possibility. No data are available on potential effects of disturbance on yellow-billed loons, and we know of no special protection to prevent disturbance of yellow-billed loons or other nesting birds in Russian oil fields (Syroechkovskiy 2008, p. 1). Likewise, we have no information on the possible impacts of oil spills, facility development, and lake-water withdrawals on yellow-billed loons in Russia. Therefore, the remainder of this section will focus on available information regarding potential impacts associated with oil and gas exploration and development in Alaska.

The potential negative effects of industrial development in yellow-billed loon nesting areas includes disturbance caused by aircraft, vehicular traffic, heavy-equipment use, maintenance activities, and pedestrian traffic. Disturbance to nesting birds from oil infrastructure has been widely discussed but poorly documented (NRC 2003, p. 49; USDOI–BLM 2008a, pp. 4–890, 4–891). Loons as a genus are susceptible to disturbance, although they sometimes habituate to predictable disturbance (discussed in Vogel 1995, pp. 15–18; Barr 1997, pp. 22–23; Evers 2004, pp. 35–37; Earnst 2004, pp. 19, 31; Mills and Andres 2004, pp. 212–213; North 1994, p. 16). Human disturbance can cause yellow-billed loons to abandon reproductive efforts or leave eggs or chicks unattended and exposed to predators or bad weather (Earnst 2004, p. 19). Observations by Earnst (2004, p. 31) indicated that adults left nests when an approaching human is as much as 1.6 km (1 mi) away, or as close as a few meters (yards). These behaviors varied by individual and circumstance, and have not been subject to formal study (Earnst 2004, p. 31); more importantly, the impacts to fitness and the potential for habituation have not been studied. Preliminary observations have been made on the Colville River Delta, Alaska, where oil field development has occurred in yellow-billed loon nesting habitat. Yellow-billed loons were surveyed during nesting and brood-rearing before (1993, 1995–1997) and during (1998–2001) the oil-facility-development phase; surveys are continuing in the oil production phase that began in 2000 (ABR Inc. 2007, pp. 1–2; Johnson *et al.* 2008, p. i). Between 16 and 30 nests were identified each year. No statistical comparisons among phases are available, but the proportion of territories with nests and nest success appeared roughly comparable before and during construction and during production. Too few pairs (3) have been within 1.6 km (1 mi) of facilities to allow meaningful comparisons of potential disturbance among phases (ABR 2007, pp. 3–4).

Potential disturbance and other habitat degradation on NPR–A oil fields will likely be mitigated by stipulations and required operating procedures (ROPs) described in the RODs for the Northwest and Northeast Planning Areas and included in oil and gas leases for those areas (USDOI–BLM 1998, Appendix B, pp. 29–43; USDOI–BLM 2004a, Appendix B, pp. B–1–B–18; USDOI–BLM 2008b, Appendix A, pp. 33–74). Most of the area leased is subject to the performance-based stipulations and ROPs described here; for tracts leased in 1999 and 2002 under the 1998 ROD, prescriptive stipulations and ROPs apply (USDOI–BLM 1998, Appendix B, pp. 29–43). When lessees propose specific development plans for those tracts, there will be opportunities for the BLM to apply conservation measures for yellow-billed loons, as appropriate. For tracts leased under more recent RODs (USDOI–BLM 2004a, Appendix B, pp. B–1–B–18; USDOI–BLM 2008b, Appendix A, pp. 33–74), ROP E–11 requires facility setbacks from lakes known to harbor nesting yellow-billed loons, and E–2 and K–2 require smaller setbacks for other water bodies. The current ROP E–11 states that if yellow-billed loons are found during required aerial surveys, design and location of facilities must minimize disturbance; default mitigation is a 1-mile buffer around nest sites and a 500-meter buffer around the remainder of

the lake shoreline (USDOI–BLM 2004a, Appendix B, p. B–9; USDOI–BLM 2008b, Appendix A, pp. 51–53). The size of these buffers was determined in consultation with the Service and loon experts. Deviations to ROPs and stipulations can be authorized if it is demonstrated that the conservation objective of the stipulation or ROP can be met, or if it is determined that no other options are available (USDOI–BLM 2008b, Appendix A, pp. 52–53). Such deviations are sometimes exercised (e.g., USDOI–BLM 2004b, p. 1033), but BLM has committed in writing to close collaboration with the Service in its evaluation of a deviation request that may affect yellow-billed loons (V. Galterio, in litt. 2008, p. 1). Specifically, BLM has stated in writing that any exception or deviation would be required to meet the management objective of minimizing disturbance to the species and would, at a minimum, need to provide the same level of protection that the default buffers provide (V. Galterio, in litt. 2008, p. 2). This and other ROPs and stipulations are also discussed under Factor D.

Varner (2008a, pp. 1–4) analyzed the likelihood that oil-field facilities placed randomly (i.e., without regard to loon distribution) on the landscape would occur proximal to loon nesting or brood-rearing areas. Using data from Stehn *et al.* (2005, pp. 1–38) that identified lakes within NPR–A leased tracts that have a less than 30 percent likelihood of yellow-billed loon presence (moderate-high potential yellow-billed loon lakes) and BLM's projected development scenarios for NW and NE NPR–A, Varner (2008a, p. 4) estimated that 52 percent of 12 projected facilities would occur within the 1.6 km (1 mi) buffer of a moderate-high potential yellow-billed loon lake, and 38 percent would occur within a 500-m (1,640 ft) buffer. In other words, approximately half of projected developments would require additional consideration during site layout and design to avoid yellow-billed loon buffers. We note that this development projection is uncertain, and it is possible that either a smaller or greater number of facilities could actually be built.

In summary, based on our understanding of factors affecting nest success in other species and our knowledge of loon behavior, we have identified potential impacts of disturbance to loons in NPR–A. However, the only data on the effect of oil development disturbance on yellow-billed loons are from the Colville River Delta, where small sample size and lack of controls or replicates make inference difficult. As suggested by Earnst (2004, p. 31), a well-designed study is needed to determine the most appropriate buffer distance between loon nesting lakes and oil facilities. However, we believe that current buffer distances are conservative and will protect loons from disturbance. We do not know how much development will occur in NPR–A, nor do we know the timeline over which development will occur. In NPR–A, where 90 percent of yellow-billed loons breeding on the ACP occur, we expect that adherence to current BLM regulations will ameliorate impacts by requiring that planners build facilities outside buffers or find other ways to comparably minimize disturbance.

Terrestrial oil or fuel spills occur during oil and gas extraction activities from multiple sources, including well blowouts, pipeline leaks, failure of fuel storage tanks, and accidents transporting fuel. Spills of saline water produced with oil or derived from seawater used in oil recovery also occur frequently (NRC 2003, pp. 47, 230). Marine oil spills may damage prey populations, and air and boat traffic associated with oil and gas extraction offshore could affect yellow-billed loon habitat by disturbing loons so that they decrease foraging success or avoid disturbed areas. Both non-nesting and breeding yellow-billed loons on Alaska's ACP use marine areas of the Beaufort and Chukchi Seas to forage during the nesting season. In addition, in spring yellow-billed loons gather in polynyas, ice leads, and open shorelines near river deltas offshore of breeding areas in Alaska and Canada prior to dispersing to nesting grounds. Here we discuss effects of spills on loon habitat; direct effects of oil spills on loon mortality are discussed under Factor E.

Negative effects are expected to result for bird habitats contacted by oil spills (USDOI–BLM 2008a, pp. 4–760, 4–916). Changes in freshwater chemistry or pollutant loads due to oil spills associated with oil and gas development could render breeding habitats unsuitable (NRC 2003, pp. 6–7, 73–74). Oil or saline water spills could have long-term effects on tundra waters by killing prey and shoreline vegetation (NRC 2003, pp. 95, 119, 124–125, 230–231; USDOI–BLM 2008a, pp. 4–914, 4–915), thereby reducing food availability and cover.

On Alaska's North Slope oil fields, one of the most closely regulated oil production areas in the world, there were 3,696 spills from oil production, pipeline, and oil exploration facilities between July 1995 and June 2005 totaling more than 6.8 million liters (L) (1.8 million gal) of sea water, produced water, crude and diesel oil, and drilling muds (ADEC 2007, p. 49). Most spills have been relatively small and caused minimal impacts to surrounding habitats or wildlife, although three major spills have occurred from the North Slope segment of the Trans-Alaska Pipeline (NRC 2003, p. 47), and a transit pipeline accident spilled 6,357 barrels (bbl) of crude oil in 2006 (ADEC 2008, p. 1). It is difficult to predict the likelihood of future spills, in part because technology continues to improve. Based on previous spill rates, BLM estimates that development in NE NPR–A could result in more than 2,000 small oil spills (less than 500 bbl), and approximately 3 large spills (greater than 500 bbl) (USDOI–BLM 2008a, pp. 4–60–4–62); in the next 100 years, there is a 4.2 percent chance of a very large (238,000 bbl, or 10-million-gal) blowout oil spill in NPR–A (USDOI–BLM 2008a, p. 4–910). If, as expected, development is concentrated in specific areas that overlap with high-density loon breeding habitat, the potential for oil spills affecting some loon nesting lakes exists. However, as discussed above and under Factor D, measures are in place in NPR–A to lessen this potential. For example, ROP E–11 requires minimizing disturbance to loons using setbacks of permanent infrastructure around nesting lakes that would make spills less likely to affect these lakes; other stipulations and ROPs require minimizing the potential for pipeline leaks and protecting fish-bearing water bodies (USDOI–BLM 2008b, Appendix A, pp. 33–74).

Construction of roads, gravel pads, and facilities on the North Slope of Alaska has affected freshwater flow and drainage as a result of permafrost decay consequent to infrastructure placement, vegetation damage, or fluid extraction and injection (NRC 2003, pp. 3, 10, 64–72, 126–127). North (1994, p. 16) and North and Ryan (1989, p. 303) suggested that permafrost decay consequent to infrastructure placement and disturbance of vegetation could cause breaching of rivers into yellow-billed loon breeding lakes, rendering them unsuitable due to fluctuating water levels (causing drowned nests) or increased turbidity (negatively affecting foraging success). The requirement in ROP E–11 of a 1.6 km (1 mi) buffer around nest sites and a 500-meter (1600-ft) buffer around the remainder of the lake shoreline or an equally protective alternative where no permanent infrastructure would occur (USDOI–BLM 2004a, Appendix B, p. B–9; USDOI–BLM 2008b, Appendix A, pp. 51–53) will likely lessen the chances of such damage. It is possible that ice

roads on breeding lakes could compact lake ice and delay melting (USDOI–BLM 1998, p. IV–3–b–1–b), thus delaying or discouraging yellow-billed loon breeding, since loons require lakes to be largely clear of ice before they commence nesting. There are currently no regulations which would prevent ice roads on breeding lakes.

It is possible that lake-water depletion or drawdown could affect connectedness, depth, or melt date of yellow-billed loon nesting or brood-rearing lakes and could render such areas unsuitable as breeding habitats. Fluctuations in lake water levels during nesting could cause nests to flood, or alternately could leave nests stranded away from the water during incubation, making them more vulnerable to depredation or abandonment (e.g., Kertell 1996, pp. 356–366 for Pacific loons; Fair 1979, pp. 57–63 for common loons; see also discussion in Earnst 2004, p. 19). Earnst (2004, p. 19) proposed that yellow-billed loons might be less adapted to fluctuating water levels than other loons, in part because the short arctic summer does not allow the opportunity to re-nest or delay nest initiation. Water withdrawals could have additional impacts on habitat suitability by affecting fish populations that breeding yellow-billed loons depend upon for food.

Usually taken by pumping in winter, water from lakes is used in arctic oil fields for exploratory drilling, as well as winter road and pad construction and facility use. From 1999 through 2006, approximately 2 billion L (513 million gal) of water from 126 lakes were used to drill 20 wells and construct 23 ice drill pads and roads in the NW NPR–A (USDOI–BLM 2008a, p. 3–26). During development, water is needed for drilling and facility use. According to BLM, ''Drilling water demand is estimated to be 21,000 to 63,000 gal per day, or 850,000 gal per well. Water demand is estimated to be 100 gallons per day per person. Potable water demand would drop after 2 to 4 drilling seasons, when the major construction phase would be finished. Approximately 160 persons would be on site during the production and development phases for each CPF (central processing facility) and 4 to 6 satellite fields (S. Rothwell, ConocoPhillips, pers. comm.). Drilling-water demand over the 20-year production life of the field (largely for workover operations and infill drilling) would likely be less than the 21,000 gal per day estimated above'' (USDOI–BLM 2008a, p. 4–30).

During production, waterflooding (injecting water into the reservoir) is sometimes used, but it is more cost-effective to use treated sea water rather than freshwater from lakes (Varner in litt. 2008b, p. 1). BLM has included potential use of lakes for waterflooding in their consideration of environmental effects of oil and gas development in NPR–A (USDOI–BLM 2008a, pp. 4–31–4–32), but at present such use is considered unlikely, particularly considering present stipulations and ROPs protecting lake fish and wildlife habitat (Varner in litt. 2008b, p. 1). Injection water demands can be met by produced formation water (i.e., water within the pores of rock) once production begins (Varner in litt. 2008b, p. 1; USDOI–BLM 2008a, pp. 4–31–4–32).

The actual amount of water withdrawn from lakes is highly variable and dependent upon the type of water use. To build ice roads, the amount taken from a given lake may be lower than allowed limits because it is not efficient to transport water a long distance; in contrast, lakes used for facility use or drilling are pumped more frequently and throughout the year (Hinzman *et al.* 2006, pp. 14, 56; Baker Inc. 2007, p. 4; Moulton 2007, p. 11).

Most pumped lakes monitored by oil companies on the ACP have recharged completely in spring from snowmelt or river flooding; however, most removals were much less than the 30-percent volume permitted at the time by State of Alaska regulations (Hinzman *et al.* 2006, p. 143; URS 2001, p. 4–1; Baker 2007, pp. 77–79; Baker 2008, pp. 7, 38). Two adjacent lakes monitored at Alpine Development showed different patterns in 2007: One recharged adequately from estimated snowmelt runoff given the allowable withdrawal volume of 30 percent; the other lake did not do so, and would likely be below required levels if river flooding did not occur (Baker 2008, p. 38).

We examined whether current regulations will likely be adequate to protect loon nesting lakes from excessive water withdrawal. Ninety percent of yellow-billed loon nesting range on the ACP is under BLM management in NPR–A. Outside NPR–A, the Alpine development on the Colville River Delta is the only set of oil facilities in ACP yellow-billed loon nesting range under sole State of Alaska management. At this facility, the State increased the 15-percent limit on water withdrawal from one lake with nesting yellow-billed loons to 30 percent because ''the previous criterion imposed a severe constraint on the project'' (Moulton 2007, p. 4). However, since that decision, the State of Alaska has participated in the ''Conservation Agreement for the Yellow-billed Loon (*Gavia adamsii*),'' making a commitment to protect yellow-billed loons (Conservation Agreement 2006, p. 11) and, therefore, making it less likely that the State would allow such activities to occur if they might negatively affect loons.

In NPR–A, water-withdrawal stipulations and ROPs are specifically designed to protect and monitor fish-bearing lakes. The current Federal (BLM) requirements for NE NPR–A, based on State of Alaska permit regulations, allow up to 15 percent of lake volume below ice cover to be removed from lakes deeper than 2.1 m (7 ft) with ''sensitive'' fish species (i.e., fish other than ninespine stickleback and Alaska blackfish) and up to 30 percent of lake volume from lakes deeper than 1.5 m (5 ft) with non-sensitive fish species; up to 35 percent may be removed from lakes without fish (USDOI–BLM 2008b, Appendix A, pp. 44–45). Permits are based on a site-specific analysis. At present, there are no requirements to prevent pumping of known loon-nesting lakes, and no requirements for direct measurements of effects on lake biota, including fish. However, in a letter to the Service emphasizing the BLM's commitment to supporting conservation of the yellow-billed loon, the BLM State Director for Alaska expressly clarified the ROPs and stipulations in NPR–A leases concerning water withdrawal. Underscoring the importance of continued collaboration with the Service (V. Galterio, in litt. 2008, pp. 1–3), the State Director explained that it will require a water-quality monitoring plan to be developed that will outline specific physical and biological water-quality parameters to be collected in lakes harboring yellow-billed loons (V. Galterio, in litt. 2008, pp. 1–3). We believe these requirements will protect yellow-billed loon lakes from deleterious effects of water withdrawals. See discussion under Factor D, Inadequacy of Existing Regulatory Mechanisms.

In conclusion, we have identified several mechanisms by which development could affect yellow-billed loons, including disturbance, oil spills, facility development, and lake-water withdrawals. Although we believe onshore oil and gas activity is likely to increase in Alaskan and Russian breeding grounds in the foreseeable future, we do not believe these activities will result in significant population-level impacts. Although a large proportion of high-density yellow-billed loon nesting habitat on Alaska's ACP coincides with areas of high potential

for oil and gas development in NPR–A, the BLM, through stipulations and ROPs required to be included in oil and gas leases, has established a number of mechanisms to protect yellow-billed loons from the effects of oil and gas activities in NPR–A, if development ultimately does overlap with yellow-billed loon breeding habitat. We believe that disturbance and spills will likely be minimized through requirements that facilities be built at least 1.6 km (1 mi) from nests, and 500 m (1,640 ft) from lake shorelines, or an equally protective alternative. The BLM and the State of Alaska have committed to work with the Service to minimize impacts through water quality monitoring. With current projections of approximately 12 facilities in NPR–A, we believe the current regulations and close consultation with the Service are sufficient to protect yellow-billed loons from population-level effects of oil and gas development on the ACP. Based on the best available information we find that oil and gas development in the ACP is not a threat to the yellow-billed loon now or in the foreseeable future.

On western Russian breeding grounds, we do not have information on whether yellow-billed loon distribution overlaps with zones of industrial activity. Due to lack of study, regulation, and available information, the environmental impacts of industrial development in the Russian yellow-billed loon breeding range are not well understood. Because the bulk of the Russian breeding population appears to occur in eastern Siberia (Yakutia and Chukotka), where little industrial development is occurring or planned, most potential impacts of industrial development in Russia are limited to the western edge of the range. Based on the best available information, we find that oil and gas development is not a threat to the yellow-billed loon in its Russian breeding range now or in the foreseeable future.

We expect large spatial and temporal variation in the level of oil and gas development activities on yellow-billed loon breeding habitat, but most such habitat will remain undeveloped in the foreseeable future. We do not expect terrestrial oil and gas development to occur in the Canadian breeding range, and Russian oil and gas development is likely to be confined to the western edge of the breeding range there. In Alaska's NPR–A, some areas are likely to be developed, particularly at the eastern edge of NE NPR–A near the Alpine development. In Alaska, we believe that existing required protective measures will protect the yellow-billed loon from impacts of development. We find that degradation of breeding grounds throughout its range from oil and gas development is not a threat to the yellow-billed loon now or in the foreseeable future.

Temperate Marine Habitat: Degradation of Marine Habitats in Migration and on Wintering Grounds

The marine environment is clearly important for yellow-billed loons, as that is where they spend their first 3 years, and subsequently at least 8 months per year. Wintering areas along the coast of Alaska and British Columbia, Canada, are relatively pristine. Two important wintering areas for yellow-billed loons, the western Pacific Ocean coastal waters of the Yellow Sea and Sea of Japan, and the North and Norwegian Seas, have recently been identified among the ocean ecosystems with the greatest human impacts, and therefore degradation, of any in the world (Halpern *et al.* 2008, p. 949). Possible effects of human activities on yellow-billed loon marine migrating and wintering habitats include depletion of the prey base through a variety of mechanisms, including pollution-induced hypoxia and destructive fishing practices, as discussed below. Potential effects on loons from depletion of the winter prey base include reduced body condition, which could result in mortality or reduced breeding propensity.

Effects of marine oil spills, other effects of marine oil and gas development, and potential direct effects of contaminants on yellow-billed loons are discussed under Factor E.

Asian seas, where 24 out of 29 Alaska-breeding yellow-billed loons with satellite transmitters wintered (Schmutz in litt. 2008, p. 11), are undergoing environmental stress. The United Nations Global International Waters Assessment (GIWA) Regional Assessment of the Yellow Sea described Yellow Sea fisheries as threatened by ''pollution and loss of biomass, biodiversity and habitat, resulting from extensive economic development in the coastal zone'' (Teng *et al.* 2005, p. 33), caused by a tenth of the world's humans (approximately 600 million) living in surrounding watersheds. For example, the East China Sea (adjacent to the Yellow Sea) is undergoing ''severe environmental degradation'' from inputs of inorganic nitrogen, phosphate, oil hydrocarbons, organic matter, and heavy metals (Li and Daler 2004, p. 107). A significant effect of pollution inputs in aquatic systems are zones of eutrophication-induced hypoxia (''dead zones''), which are among the most deleterious anthropogenic influences on marine environments, leading to mass mortality of fish and invertebrates, and major changes in community structure (Diaz and Rosenberg 2008, p. 926). Large ecosystem effects of eutrophication and hypoxia have been documented in coastal waters of Japan (*e.g.*, Ueda *et al.* 2000, pp. 906–913; Suzuki 2001, pp. 291–302; Kodama *et al.* 2002, pp. 303–313), Korea (Lim *et al.* 2006, p. 1525), and the East China Sea (Chen *et al.* 2007, p. 399). However, these effects are seasonal, occurring more often in summer, when adult breeding yellow-billed loons would have migrated from the area. These effects also vary geographically, with most severe dead zones occurring at mouths of watersheds with large population centers or that deliver large quantities of nutrients.

Unsustainable fishing practices, including overfishing, indiscriminate trawling, and use of pesticides for fishing (Teng *et al.* 2005, pp. 34–35), have resulted in significant changes in the fisheries of the intensively exploited Yellow Sea and other Asian fisheries. These changes include significant declines in fish populations and changes in community structure, with larger (and commercially important) species replaced by smaller (and less valuable) fish (Teng *et al.* 2005, p. 33). Unsustainable exploitation of marine natural resources is expected to continue over the next 20 years, causing fisheries production to decrease by 30–50 percent (Teng *et al.* 2005, p. 35).

Degradation of temperate marine wintering and migrating yellow-billed loon habitats could deplete the yellow-billed loon prey base, which could cause reduced body condition, mortality, fewer birds migrating, and reduced breeding propensity. Although information exists regarding pollution occurrence and effects on fisheries in temperate marine waters in Asian wintering areas, we do not know which species yellow-billed loons eat there. We therefore do not know whether yellow-billed loon prey species have been affected. Indeed, documented changes in community structure from large finfish to smaller forage fish could benefit yellow-billed loons, as their diet items are relatively small. Further, although pollution and declines in fisheries are documented in Asian Pacific wintering areas, the information is inadequate to assess what proportion of the habitat or wintering loons is affected. We also have no data on yellow-billed loon mortality due to habitat degradation in wintering areas or migration routes, or on body condition at any season.

In summary, yellow-billed loon mortality from marine pollution has not been documented. The only other source of information we have to evaluate this factor is population trend information from the ACP. Yellow-billed loons breeding on the ACP migrate to Asian wintering grounds (Schmutz in litt. 2008, p. 1). If deterioration of these wintering areas were resulting in population-level effects on yellow-billed loons, we would expect to see evidence of a large population decline on the Alaska breeding grounds. Instead, survey trends indicate a slightly declining or stable population. We do not have information indicating that the current effects to the species from the degradation of temperate marine waters will change in the future. Therefore, we find that degradation of temperate marine waters is not a threat to yellow-billed loons now or in the foreseeable future.

Climate Change

While climate change impacts to some environmental features (e.g., sea ice) can be reliably assessed to some degree into the future, assessment of climate-induced changes to yellow-billed loon habitat in arctic terrestrial and freshwater systems and arctic and temperate marine systems is complex, with highly variable predictions of effects. Current models suggest that global temperatures are likely to continue to rise for up to 50 years, even if greenhouse gas emissions were curbed today (Meehl *et al.* 2007, p. 749). Below, we evaluate the available information on possible climate-change effects in these systems that could affect yellow-billed loons.

I. Arctic Habitats

There is strong evidence of ongoing impacts of climate change in the arctic, all of which are predicted to continue or accelerate in the next century (Anisimov *et al.* 2007, pp. 662–663; Christensen *et al.* 2007, pp. 902–903), although with varying degrees of uncertainty and regional variation (Reist *et al.* 2006b, p. 381) in effects on different biotic communities, hydrology, and geomorphology. Impacts include rising air temperatures (Anisimov *et al.* 2001, summarized in Anisimov *et al.* 2007, p. 656) at approximately twice the global rate (McBean *et al.* 2005, p. 39), declining summer sea ice (Richter-Menge *et al.* 2008, p. 1), increasing coastal erosion (Mars and Houseknecht 2007, p. 585; Rachold *et al.* 2002, cited in Walsh *et al.* 2005, p. 233), rising sea levels (Walsh *et al.* 2005, pp. 232–234), a small increasing trend in precipitation (McBean *et al.* 2005, p. 39), warming and thawing permafrost, and decreasing extent of land underlain by permafrost (Clow and Urban 2008, p. 3; Walsh *et al.* 2005, p. 210; Jorgenson *et al.* 2006, p. 1; Jorgenson *et al.* 2008, p. 1). All of these could interact via feedback loops, as described below.

With respect to the yellow-billed loon, we are most concerned about effects of potential climate-induced changes on morphology of breeding lakes and prey fish communities. In northern areas, such as along the arctic coast in most of the yellow-billed loon's breeding habitat (Siberia, Alaska's ACP, and most of the Canadian breeding range), permafrost is continuous, and could be hundreds of meters (ft) deep. However, some habitat extends south of this region to areas of discontinuous permafrost, which is more susceptible to the effects of climate change (Seward Peninsula, southern part of the Canadian range). Yellow-billed loon breeding habitat on the arctic coast depends on a unique hydrological system, which is in turn dependent upon cold temperatures resulting in continuous and stable permafrost underlying perched (i.e., isolated above the groundwater) lakes (Rovansek *et al.* 1996, p. 316) and relatively consistent weather patterns, such as most precipitation deposited in winter as snow, and spring ice-jams and floods contributing to lake recharge (Prowse *et al.* 2006, pp. 330–331). A community of fish species has adapted to this system, overwintering in deeper lakes, but also entering or leaving some lakes during spring river floods.

Morphology of Breeding Lakes

Permafrost thawing could reduce the size, number, or suitability of lakes that yellow-billed loons use for nesting and brood-rearing, especially near the southern boundary of continuous and discontinuous permafrost. When near-surface permafrost thaws, unfrozen channels develop between and below water bodies, allowing subsurface drainage to occur. In addition, permafrost degradation around edges of lakes near river channels can cause lakes to be breached and drained (Mars and Houseknecht 2007, p. 586). Permafrost degradation has already affected lakes in some areas at the southern boundary of continuous permafrost. In Siberia, L.C. Smith *et al.* (2005, p.1) documented a decline in lake abundance and area in zones of discontinuous permafrost. Yoshikawa and Hinzman (2003, p. 151) documented numerous shrinking ponds on Alaska's Seward Peninsula, at the southern boundary of the yellow-billed loon's range, due to an increase in internal drainage following permafrost degradation between 1950 and 2000. Because a limited number of loon surveys have been conducted on the Seward Peninsula, we do not know whether these changes are affecting yellow-billed loons there. Riordan *et al.* (2006, p. 1) observed ponds shrinking throughout subarctic Alaska, and attributed this drying to permafrost warming, as well as increased evaporation during a warmer and longer growing season. The arctic zone of continuous permafrost has relatively cold air temperatures and is considered relatively stable. However, Clow and Urban (2008, p. 3) measured increases for a total average warming of 3.5 K (kelvin) (3.5 degrees C, 6.3 degrees F) during 1989–2007, and Jorgenson *et al.* (2006, p. 1) observed a recent, abrupt increase in the extent and rate of ice wedge degradation on Alaska's ACP. Ice wedges are 2–4 m deep polygons of ice, more than 3,000 years old, occurring just below the vegetation layer in ice-rich regions of the arctic. Both effects were coincident with record warm air temperatures in the late 1990s.

Permafrost warming and thawing is predicted to continue as the arctic climate warms (Meehl *et al.* 2007, p. 772). Zhang *et al.* (2007, p. 443) simulated changes in Canada's permafrost distribution using a model driven by six general circulation models. They predicted that active layer (the top layer of soil that thaws in summer) thickness would increase, the boundary between continuous and discontinuous permafrost would move north, and there would be significant impacts on surface and ground hydrology. Stendel *et al.* (2007, pp. 203, 211) used a high-resolution regional climate model to predict changes to permafrost in eastern Siberia over the next century, and concluded that under the various modeling scenarios reviewed by the Intergovernmental Panel on Climate Change (IPCC), the active layer depth would increase up to 1 m (3.1 ft) along the arctic coast. These predictions suggest that some breeding lakes, particularly in the southern part of the yellow-billed loon's range, could be altered, but overall effects will depend on the magnitude and direction of other changes (e.g., precipitation).

Arctic sea-ice loss accelerates air temperature warming, which, in turn, increases permafrost warming. Recently, Lawrence *et al.* (2008, p. 1) evaluated how periods of abrupt rapid sea-ice loss affect terrestrial arctic climate and ground thermal state in the Community Climate System Model. They found that arctic land warming trends would be 3.5 times greater during periods of rapid

sea-ice loss than otherwise predicted for the 21st century. They predicted that such a warming period would increase ground heat accumulation substantially, increasing the vulnerability of permafrost to degradation (Lawrence *et al.* 2008, p. 1). The 2007 arctic summer sea-ice extent was a new record minimum since satellite measurements began in 1979, with a large reduction in area compared to the previous record set in 2005 (Richter-Menge *et al.* 2008, p. 1), and the 2008 extent was similar (National Snow and Ice Data Center, *http://nsidc.org/data/seaice_index/index.html*).

Aside from causing increased land warming trends, loss of sea ice could affect freshwater breeding lakes adjacent to marine shorelines through breaching and increased salinity, because shorelines would no longer be protected from storms by summer and fall shorefast ice (Mars and Houseknecht 2007, p. 586). Coastal erosion rates are increasing, with land loss rates in some of Alaska doubling in the last half century (Mars and Houseknecht 2007, p. 585), and parts of the Laptev Sea coast in arctic Russia are retreating at an average rate of 2.5 m (8.2 ft) per year (Rachold *et al.* 2002, cited in Walsh *et al.* 2005, p. 233), but it is not known whether yellow-billed loon breeding lakes in this region are close enough to the coast to be affected. These effects are exacerbated by rising global sea levels. The greatest sea-level increases over the next century are projected for the arctic, although with much uncertainty (Christensen *et al.* 2007, p. 914; Walsh *et al.* 2005, pp. 232–234).

The amount and timing of precipitation also influences the permafrost active layer, and is predicted to increase in the arctic (Christensen *et al.* 2007, pp. 902–906), with a greater percentage increase in winter and less in summer. Increased snow cover in winter is likely to contribute to permafrost warming, as snow limits heat exchange between the atmosphere and the ground; significant snow cover keeps the ground warmer than the air (Stieglitz *et al.* 2003, p. 1). Predicted increased frequency of rain-on-snow events in Alaska and eastern Siberia (Rennert *et al.* 2008, p. 4) would exacerbate the warming effect on permafrost, as latent heat release from a single large rain-on-snow event can constrain the soil temperature to 0 degrees C (32 degrees F) for months (Putkonen and Roe 2002, p. 1,188).

There could also be direct effects of changes in precipitation on lakes used by yellow-billed loons. Increased winter precipitation could provide more spring floodwater to recharge lake basins (Walsh *et al.* 2005, p. 188; Prowse 2006, pp. 330–331). In contrast, increased summer rainfall will likely be lost to stream flow, increased subsurface storage, and increased evaporation in warmer air temperatures (Rovansek *et al.* 1996, p. 311; Bowling *et al.* 2003, p. 2–1). Earlier snow melt from increasing air temperatures and the predicted increase in winter rain events could decrease large breakup events in the spring, perhaps reducing lake replenishment from ice-jam flooding.

Overall, it is possible that lakes at the southern boundary of continuous permafrost could be affected, that this boundary will move north, and that eventually even northern areas of continuous permafrost could experience changes that will negatively affect lakes. For the yellow-billed loons, these effects could mean reduced habitat in the southern part of its range in the near-term (an uncertain period, but perhaps the next several decades), and eventually, in the northern parts of its range. At present, however, models have not been developed to make reliable predictions about the timing or extent of such habitat reductions and associated impacts on the species. Although permafrost degradation has already occurred in southern parts of the breeding range, such as the Seward Peninsula, there have been no observed effects on loon breeding lakes, and we do not have trend information for that population (which could provide some indication of the population impacts of permafrost degradation). Therefore, based on currently available information we find that climate-induced changes to the morphology of the yellow-billed loon's breeding lake habitats are not a threat to the species now, and we cannot reasonably predict that they will become a threat to the species in the future.

Prey Fish Communities

Climate change could alter yellow-billed loon prey fish communities in breeding lakes; species potentially affected include ninespine sticklebacks, Alaska blackfish, and least cisco (considered among the most vulnerable to extirpation through changes in species composition) (Wrona *et al.* 2006, p. 413). We are uncertain, however, about the form or timing that potential effects on fish communities might have on yellow-billed loons due to the interaction of factors influencing community composition. Fish species vary with lake depth and resulting ice thickness. Shallow (less than 2 m) (less than 6.6 ft) lakes that freeze to the bottom cannot harbor overwintering fish, and even somewhat deeper lakes may have low dissolved oxygen levels, allowing only species adapted to these low levels, such as sticklebacks and Alaska blackfish, to survive. Shallow lakes that freeze to the bottom sometimes maintain fish populations via replenishment from spring river floods. If ice thickness declines in a warmer climate, deep lakes could have increased oxygen, allowing less tolerant species to overwinter, and shallower lakes would be able to harbor overwintering fish. Conversely, shallow lakes might lose replenishment with decreased spring flooding (Hershey *et al.* 2005, pp. 39, 52). Fish habitat is also dependent on basin shape, since shallow littoral zones are needed to provide food for fish; lower water levels might alter or diminish littoral habitats. Fish habitat characteristics are reflected in yellow-billed loon habitat preferences modeled by Earnst *et al.* (2006). Loons were found more often on medium or deep lakes than on shallow (less than 2 m) (less than 6.6 ft) lakes that freeze to the bottom, and for shallow lakes, loons were more likely to be present if the lake was connected to streams or other lakes. Proportion of shoreline with vegetation, indicating littoral habitat, was a positive indicator of yellow-billed loon presence. Loons preferred both 2 to 4 m (6.6 to 13.1 ft) deep lakes and greater than 4 m (greater than 13.1 ft) deep lakes, but because the latter are rare on the North Slope, 64 percent of yellow-billed loon sightings were on lakes 2 to 4 m (6.6 to 13.1 ft) deep (Earnst *et al.* 2006, p. 235). In summary, although climate change could have negative effects on prey communities, there could be positive effects. Not only is there considerable uncertainty as to the possible effects to prey communities from climate change, there is also substantial uncertainty about the timing over which changes will occur. Scientists have not yet developed the specific predictive models and empirical research to improve our understanding of these changes and enable us to predict the timing with which they might occur.

In addition to breeding lakes, yellow-billed loons in summer use shallow nearshore marine waters (less than 10 m (33 ft), roughly within 20 km (12.4 mi) of shore) adjacent to mainland habitats and near barrier islands (Earnst 2004, p. 7). Little is known about the prey species that yellow-billed loons use in these habitats, although they are known to eat a variety of species in winter marine habitats (see Feeding Habits, above; also reviewed in North 1994, p. 7 and Earnst 2004, pp. 9–10). Changes in arctic marine ecosystems, including

increased primary production, introduction of new species, and population shifts in existing species could occur as the climate warms (Perry *et al.* 2005, p. 1,912; Behrenfeld *et al.* 2006, p. 752; Reist *et al.* 2006a, pp. 370–380). These changes to summer marine prey communities would be complex, and the form of potential new species assemblages cannot be reliably predicted at this time.

Increased ocean acidification as a result of increasing levels of atmospheric carbon dioxide could affect marine food webs, but the form, magnitude, and timing of such effects are unknown. Due to limited research and understanding of the processes involved (Zeebe *et al.* 2008, p. 52), it is not possible to predict effects on loon prey species from ocean acidification at this time.

Therefore, as discussed above, due to a paucity of information and models available to reliably predict effects of climate-induced changes to yellow-billed loon prey species assemblages in breeding lake and marine habitats, we find that climate-induced changes to yellow-billed loon prey species is not a threat to this species now or in the foreseeable future.

Polynyas and Ice Leads

We also considered whether polynyas and ice leads, both of which provide feeding and staging areas for yellow-billed loons in spring before the breeding season, were likely to disappear as the arctic climate changes. Arctic sea ice is projected to decline most, and surface air temperatures increase most, in summer and fall (Walsh 2008, p. S19). In 2007, there was a record sea-ice minimum in the arctic in September, and the Chukchi Sea did not freeze until early December, but an advancing ice field covered most of the eastern Bering Sea shelf by mid-January 2008. A subsequent near record maximum ice extent occurred in March 2008, and the Bering Sea was not ice free until almost July 2008 (Overland and Stabenow 2008, p. 2). Overland and Stabenow (2008, p. 5) predicted that although arctic sea ice will continue to decrease seasonally in late summer and fall, sea ice will still form in winter, extending south to the Bering Sea. If this projection is correct, polynyas and ice leads should continue to provide productive spring habitat for yellow-billed loons, even as the arctic climate continues to warm. Therefore, we find that loss of polynyas and ice lead habitats is not a threat to yellow-billed loons now or in the foreseeable future.

Shipping Traffic

We also evaluated the potential effects of increased disturbance and oil spills to arctic yellow-billed loon habitat from increased shipping traffic, as a result of summer and autumn sea-ice loss, throughout arctic marine waters near loon breeding areas. Because of the sea-ice decline discussed above, in 2008 both the Northwest passage and the so-called Northeast Passage, or Northern Sea Route, along the Russian arctic coast were ice free likely for the first time since the last ice age 125,000 years ago (NSIDC 2008). As the extent of arctic sea ice in the summer has declined and the duration of ice-free periods has increased, interest in shipping within and through arctic waters has increased (Brigham and Ellis 2004, p. 2). This potential increase in shipping could affect yellow-billed loons through habitat degradation, disturbance, or fuel spills. However, we have not found any reliable predictions about the location, type, and amount of shipping that might occur as ice-free periods increase. In addition, the wide distribution and low density of yellow-billed loons in arctic marine areas during the breeding season makes it unlikely that the population would be at increased risk if shipping traffic were to increase. Because we are uncertain about the magnitude of shipping traffic increases and because the low density of loons in the environment makes them less vulnerable to vessel accidents or disturbance, we find that increased arctic shipping is not a threat to yellow-billed loons now or in the foreseeable future.

In summary, our evaluation of climate-change effects on arctic yellow-billed loon habitats included documented and predicted climate-induced changes to various features of the environment, followed by hypothetical but reasonable suppositions about possible alterations to habitats important to yellow-billed loons. There are no data to suggest that climate-induced changes documented to date have resulted in breeding-habitat changes, and based on the stable or slightly declining trend on the ACP, it does not appear that these changes have affected the yellow-billed loon population there. At this time, we are unable to predict potential future changes to yellow-billed loons and their habitats discussed above, because, in addition to uncertainty about the magnitude, direction, and timing of climate-induced changes to the environment, no empirical data exist regarding the effects of those potential changes on yellow-billed loons or their habitats.

In arctic areas, there is strong evidence that coastal erosion is occurring, and some evidence for breaching of freshwater lakes adjacent to coasts, but little or no information on whether these environmental changes have affected yellow-billed loon breeding lakes. While there is strong evidence that climate change is causing permafrost loss, no information is available on how this could affect freshwater lake morphology and the yellow-billed loon prey base in the future. Based on the best available data, we believe that important polynyas and ice-lead spring staging habitat are likely to continue to exist in the foreseeable future. While ocean acidification will likely have long-term effects on marine communities, we do not know how it will affect loons. We believe the effects of increased shipping in arctic seas will be negligible because yellow-billed loons are widely dispersed across breeding and migrating landscapes.

II. Temperate Habitats

Global ocean temperatures increased (0.1 degrees C (0.2 degrees F) from 1961 to 2003, although with some cooling since 2003; Bindoff *et al.* 2007, p. 387), and effects on primary productivity and dissolved oxygen varied with latitude. Primary productivity in warm, low-latitude oceans declines as upper-ocean temperature increases, while warmer temperature at high latitudes increases productivity and decreases oxygen levels (Behrenfeld *et al.* 2006, p. 752; Bindoff *et al.* 2007, p. 400).

For the yellow-billed loon wintering at low latitudes in the Yellow Sea and the Japan (East) Sea, a drop in primary productivity might mean decreased prey availability. However, as already observed in northern environments (e.g., Perry *et al.* 2005, pp. 1,912–1,915), marine animals, including yellow-billed loons, might shift north to colder, more productive waters if winter sea ice is not a barrier. As noted for northern marine species (e.g., Perry *et al.* 2005, p. 1,914) the movements of species as a result of climate change will likely be complex, so predicting the form of new species assemblages is difficult.

Potential expansion of oxygen-deficient ''dead zones'' in Asian coastal waters where yellow-billed loons winter depends partly on how climate change affects water-column stratification (Diaz and Rosenberg 2008, p. 929). Warming ocean temperatures could increase stratification, deepening the depletion of oxygen, but increased storminess, such as hurricanes, could increase mixing and thereby lessen stratification.

Changes in rainfall patterns could change freshwater and nutrient inputs. At this time, available data on the effects of climate change on dead zones in winter marine habitats of the yellow-billed loon are uncertain.

In summary, climate change effects on the temperate-latitude wintering habitat of the yellow-billed loon include increases in ocean temperature and decreases in primary productivity and dissolved oxygen levels, which could potentially affect prey fish communities and their distribution. The magnitude and form of these effects are highly uncertain, but would most likely involve a northward shift of prey species, which could be mirrored by their predators, such as wintering yellow-billed loons. Therefore, while we conclude that the effects of climate change will be widespread and will likely have some impact on yellow-billed loons in temperate habitats, we find that climate-induced changes in the temperate marine habitat are not a threat to the yellow-billed loon now or in the foreseeable future.

There are multiple hypothetical mechanisms associated with climate change that could affect loons and their breeding and non-breeding habitats. Unlike documented and predicted declines in sea ice, an obligate habitat for other arctic species such as polar bears (*Ursus maritimus*), we lack predictive models on how climate change will affect yellow-billed loon terrestrial, freshwater, and marine habitats. Manifestations of climate-mediated changes throughout arctic and temperate yellow-billed loon habitats will emerge as models continue to be refined and effects are documented, but at this time the timing, magnitude, and net effect of the impacts are uncertain.

In our analysis of Factor A, we identified and evaluated the risks to the yellow-billed loon's habitats, including: Oil and gas development (i.e., disturbance, changes in freshwater chemistry and pollutant loads, and changes in freshwater hydrology); pollution; overfishing; and climate change. Based on our review of the best available information, we find that the present or threatened destruction, modification, or curtailment of the yellow-billed loon's habitat or range is not a threat to the species now or in the foreseeable future.

Factor B: Overutilization for Commercial, Recreational, Scientific, or Educational Purposes

Subsistence harvest, as well as, bycatch of loons during commercial and subsistence fishing are discussed under Factor E.

Researchers seeking to understand the life history of yellow-billed loons have implanted 29 yellow-billed loons with satellite transmitters to date (19 birds on the ACP and 10 birds on the Seward Peninsula, Alaska; Schmutz in litt. 2008). This research is permitted by the Service under the Migratory Bird Treaty Act (MBTA) and by the Alaska Department of Fish and Game (ADFG) under State law. Although it is reasonably likely that there could be heightened risks of mortality and reduced productivity in individual birds implanted with transmitters, the number of loons in this study is not sufficient to cause population-level effects.

We do not have any evidence of risks to yellow-billed loons from overutilization for commercial, recreational, scientific, or educational purposes, and we have no reason to believe this factor will become a threat to the species in the future. Therefore, we find that overutilization for commercial, recreational, scientific or educational purposes is not a threat to the yellow-billed loon now or in the foreseeable future.

Factor C: Disease or Predation

Loons are susceptible to avian diseases, including avian cholera (from *Pasteurella multocida*), aspergillosis (from *Aspergillus fumigatus*), and avian botulism (from Clostridium botulinum) (Friend and Franson 1999, pp. 79, 130, 274), but we are not aware of any large disease-related die-offs in yellow-billed loons. Loons are susceptible to avian influenza, but in Alaska, none of six loons sampled, including two yellow-billed loons, tested positive for avian influenza viruses in 2006 (USFWS/USGS 2007, pp. 1–93; Y. Gillies in litt. 2008, p. 1), and worldwide the highly pathogenic H5N1 has not been detected in loons (*http://www.who.int/csr/disease/avian_influenza/en/*, accessed 11/24/2008).

Predation on adult yellow-billed loons is thought to be uncommon, but predation on nests on the ACP has been attributed as the primary cause of egg loss and therefore reduced productivity in some years (Earnst 2004, p. 22). Yellow-billed loon nest predators include glaucous gull (*Larus hyperboreus*), parasitic jaeger (*Stercorarius parasiticus*), and arctic fox (*Alopex lagopus*); pomarine jaeger (*Stercorarius pomarinus*), common raven (*Corvus corax*), snowy owl (*Nyctea scandiaca*), red fox (*Vulpes fulva*), and grizzly bear (*Ursus arctos horribilis*) also predate nests (North 1994, p. 11; Earnst 2004, p. 22). Many of these predators are attracted to infrastructure, which is used as nesting platforms or is associated with food sources, and so predation might be expected to increase as development in yellow-billed loon nesting habitat increases (NRC 2003, p. 6; Earnst 2004, p. 19). However, in Alaska, NPR–A ROP A–2 and A–8 require control of waste and other measures to prevent attracting wildlife to infrastructure (USDOI–BLM 2008b, Appendix A, pp. 37, 41–42), reducing the risks associated with future development. We do not know whether similar regulations would be implemented in Canada should development occur there. The extent of infrastructure increase in Russian yellow-billed loon nesting habitats, and accompanying regulation, is unknown.

In conclusion, we note that no large disease-related mortality events have been documented for yellow-billed loons. Indeed, yellow-billed loons might be relatively protected from avian disease mass mortality events that are more common in other water birds because of the loon's dispersed distribution and relatively solitary habits. We have no reason to believe that disease outbreaks will increase or will have more severe effects on yellow-billed loons in the future. Nest predation might affect current productivity, but population-level effects are more likely to results from decreases in adult survival (see Population Resiliency, above). Moreover, due to regulations associated with infrastructure development that also target increasing human safety, we believe that nest predation is unlikely to cause population-level effects in the future, at least in Alaska and Canada; no information is available that would indicate future effects of such development in Russia. Therefore, we find that neither disease nor predation is a threat to the yellow-billed loon now or in the foreseeable future.

Factor D: Inadequacy of Existing Regulatory Mechanisms

To determine if existing regulatory mechanisms protect yellow-billed loons, we evaluated existing international and United States conventions, agreements, and laws for the specific protection of yellow-billed loons or their marine and terrestrial habitats in the countries where yellow-billed loons winter, migrate, or breed. In July 2008, we sent letters to national wildlife or natural resource agencies in Canada, China, Japan, North Korea, Norway, Republic of Korea (South Korea), and the Russian Federation, asking for information about ongoing management measures and any conservation and management strategies being developed to protect the species.

We received a formal response from the government of Canada, and an informal response from a government biologist in the Russian Federation (discussed below).

The yellow-billed loon is included in the 2008 International Union for the Conservation of Nature (IUCN) Red List Category as a ''Least concern'' species; widespread and abundant taxa are included in this category. The species is not currently listed under the Convention on International Trade in Endangered Species of Wild Fauna and Flora (CITES); and trade is not known to negatively affect the yellow-billed loon. The species is listed under the United Nations Environment Program Convention on the Conservation of Migratory Species of Wild Animals (UNEP–CMS), although the United States, Russia, Canada, and most Asian nations are not signatories (*http://www.cms.int/*, accessed September 9, 2008).

In Asia, no specific relevant laws for North Korea or the Republic of Korea (South Korea) were found that would apply to protection of yellow-billed loons or their habitat. Chinese wildlife laws (The Law of the People's Republic of China on the Protection of Wildlife 1991; The Regulations for the Implementation of the People's Republic of China on the Protection of Terrestrial Wildlife 1992) protect species of wildlife and the environment, with provisions for hunting (including licensure), and habitat protection for species under the special protection of the state, although the yellow-billed loon is listed as ''not threatened'' by the China Species Information Service (CSIS database, *http://www.chinabiodiversity.com*; accessed Sept. 8, 2008).

The Japan-United States Convention for the Protection of Migratory Birds and Birds in Danger of Extinction, and Their Environment (1974) includes the yellow-billed loon, though it is not designated as a Japanese endangered species. The Convention prohibits the taking of migratory birds or their eggs, unless there are permitted exceptions for subsistence. The Convention also specifies that each party shall seek means to prevent damage to such birds and their environment, including, especially, damage resulting from pollution of the seas.

Lack of regulation and enforcement of fishing and pollution in marine waters of China and the Republic of Korea have been identified as barriers to recovery of the Yellow Sea ecosystem (UNDP/GEF 2007, pp. 79–84). ''In the Yellow Sea, there are clearly deficiencies in fisheries management and regulation. Furthermore, these deficiencies have contributed to environmental impacts or threats to biodiversity in sectors other than fisheries management'' (UNDP/GEF 2007, p. 80). We are concerned that these problems could cause harm to yellow-billed loons, but currently we have little information on mortality rates or loss of loon habitat in this region, and no evidence from our limited information on breeding population trends indicates that the lack of regulation in Asian waters is causing a population-level threat to yellow-billed loons.

We received a response to our letter to the Russian Ministry of Natural Resources from the Russian Academy of Sciences, which stated that there are no ongoing management measures to protect the yellow-billed loon in Russia. They stated that all the best known species' breeding sites are outside any protected areas, and no conservation and management strategies have been recently developed to protect the species (E. Syreochkovskiy, Russian Academy of Sciences, in litt. 2008).

The yellow-billed loon is listed in the Red Data Book of the Russian Federation (2001, pp. 366–367) as a category 3 species (rare, sporadically distributed species). The species is nominally protected under the 1978 U.S. Migratory Bird Treaty with the former Soviet Union (Convention between the United States of America and the Union of Soviet Socialist Republics Concerning the Conservation of Migratory Birds and their Environment; Pub. L. 95–616), which specifies that each party shall prohibit the taking of migratory birds, the collection of their nests and eggs, and the disturbance of nesting colonies. Exceptions include subsistence purposes for indigenous people. The Treaty also mandates that to the extent possible, the parties shall undertake measures necessary to protect and enhance the environment of migratory birds and to prevent and abate the pollution or detrimental alteration of that environment. Regional protection occurs in some regions where yellow-billed loons occur such as Kamchatka, Murmansk, Sakhalin, and Yamal-Nenets Autonomous District (AD), but not in Yakutia, Taymyr AD, or Chukotka AD, where nesting is concentrated (Red Data Book Bulletin 2003, p. 77). In Kamchatka, yellow-billed loons are protected in some nature reserves along the eastern and southern coasts of Kamchatka (Red Data Book of Kamchatka, p. 92), but not along the western coast where oil and gas development are planned. Yellow-billed loons are also protected under bilateral agreements between the Russian Federation and the Korean Republic, and Japan and China, respectively (Red Data Book of Kamchatka 2006, p. 92). We do not have reliable information on enforcement of regulations in Russia, and we also do not have information that insufficient regulation or enforcement has caused a population-level threat to the yellow-billed loon.

The Wildlife Act of Norway (1981), where loons winter in marine waters, specifies that all wildlife, including eggs, nests, and habitats, are protected (meaning that individuals of the species may not be collected or destroyed) unless otherwise prescribed by statutory law. Norway's marine ecosystem is managed by the Ministries of Environment, Fisheries and Coastal Affairs, Petroleum and Energy, and Labour and Social Inclusion (Royal Norwegian Ministry of the Environment 2006, pp. 46–59), which coordinate environmental laws regulating fishing and controlling pollution from development and vessel traffic (Royal Norwegian Ministry of the Environment 2006, p. 46). We do not have evidence that lack of adequate regulation in Norway has or is likely to lead to threats to the yellow-billed loon.

The yellow-billed loon is designated as ''not at risk'' under Canada's Species at Risk Act of 2002, legislation similar to the U.S. Endangered Species Act (*http://www.sararegistry.gc.ca/*; accessed January 28, 2009). In its assessment and status report on the yellow-billed loon, the Committee on the Status of Endangered Wildlife in Canada (COSEWIC) determined the yellow-billed loon was ''not at risk'' (COSEWIC 1997, p. iii). The report acknowledged that all loons are highly susceptible to pollution and destruction of wetland and coastal marine habitats (COSEWIC 1997, p. vi). According to the COSEWIC status report on the yellow-billed loon prepared by Barr (1997, p. 4), the dangers of human activities, the naturally low population, limited breeding habitat and food resources, and inability to adapt ensure that the yellow-billed loon will remain vulnerable. However, he also stated that its present low population could be normal, stable, and well adapted to its severe environment, and that there does not yet seem to have been any significant loss of critical habitat (Barr 1997, p. 4). The COSEWIC report (1997; p. iii) concluded that the yellow-billed loon is uncommon but widespread with no evidence of declines or limiting factors over widespread areas.

The Migratory Bird Treaty (or Convention) between Canada and the United States (originally ratified in 1916

and implemented in 1918, and amended in 1994 in Canada) established a legal framework protecting migratory birds. Under Canada's Migratory Birds Convention Act (1994), the Governor in Council regulates migratory nongame bird species, such as the yellow-billed loon, by prohibiting the killing, capturing, injuring, taking, or disturbing of migratory birds or the damaging, destroying, removing, or disturbing of nests; prescribing protection areas for migratory birds and nests; and requiring the control and management of those areas (*http://laws.justice.gc.ca/en/showtdm/cs/M-7.01///en*; accessed November 24, 2008). However, the Act allows for the subsistence take of birds, including the yellow-billed loon, by Aboriginal people in Canada. Currently, the species is not covered under Canadian Provincial laws or regulations and, thus, receives no additional protections or conservation considerations in Canada. There are no conservation and management strategies being developed to protect the species in Canada (V. Poter, Canadian Wildlife Service, in litt. 2008, p. 1), and no population surveys are conducted or planned. Although the two Migratory Bird Sanctuaries where yellow-billed loons breed (Queen Maud Gulf and Banks Island Migratory Bird Sanctuaries) encompass over 8 million hectares total and are remote from major human cities or other development, subsistence hunting by Aboriginal people is allowed within them (MacDonald in litt. 2008, p. 1). At present, we have some concern about subsistence harvest in Canada which appears to be unregulated, particularly in light of the lack of knowledge about loon population levels or trends, but we do not have evidence that this lack of regulation is causing a population-level threat to the yellow-billed loon breeding population in Canada.

Within the United States, the yellow-billed loon has protection under several laws and regulations. The MBTA makes it unlawful to kill or take eggs or nests of yellow-billed loons, but it does not provide protection for habitat, a potential concern in relation to development in breeding areas. Yellow-billed loons are not open for subsistence hunting in Alaska under migratory bird subsistence-harvest regulations (March 14, 2008, 73 FR 13788), but our analysis of harvest surveys (discussed under Factor E) indicates that harvest nevertheless occurs, at times at substantial levels. Although we have some concerns about the accuracy of reported harvest levels, as described in Factor E, we have concluded that harvest is higher than previously thought, and is likely unsustainable. The yellow-billed loon is a K-selected, long-lived species, that requires high adult survival and has low recovery potential and slow recovery rates once populations decline; consequently, significant mortality of yellow-billed loons, especially of adults, is a major concern. The Service and State of Alaska have recognized the yellow-billed loon as a potentially vulnerable species under the Birds of Conservation Concern (68 FR 6179) and State Comprehensive Wildlife Conservation Strategy (*http://www.sf.adfg.state.ak.us/statewide/ngplan/*, accessed September 9, 2008), respectively. These designations provide management and research funding prioritization.

Much of the yellow-billed loon's breeding range in Alaska is found on the NW and NE NPR–A (which is managed by the BLM), and the species is on the BLM-Alaska's list of sensitive species. One of the objectives of BLM's Special Status Species Policy is to ensure that actions requiring authorization or approval by BLM are consistent with the conservation needs of special status species and do not contribute to the need to list any special status species, either under provisions of the Act or other provisions of the policy. Specifically, the BLM must manage the habitat to conserve the species by: ensuring sensitive species are appropriately considered in land-use plans; developing, cooperating with, and implementing range-wide or site-specific management plans, conservation strategies, and assessments for sensitive species that include specific habitat and population management objectives designed for conservation, as well as management strategies necessary to meet those objectives; and ensuring that BLM activities affecting the habitat of sensitive species are carried out in a manner that is consistent with the objectives for managing those species.

The BLM has adopted stipulations and ROPs for the NW and NE NPR–A (USDOI–BLM 2004a, Appendix B, pp. B–1–B–18; USDOI–BLM 2008b, Appendix A, pp. 37–74) in order to minimize potential impacts to yellow-billed loons, such as disturbance of nesting birds and broods. As discussed under Factor A, these include water-withdrawal standards for deep fish-bearing lakes and setbacks for exploratory drilling and permanent facilities near fish-bearing and deep lakes (greater than 3.9 m (13 ft) deep). Both the NW NPR–A Integrated Activity Plan/Environmental Impact Statement Record of Decision (USDOI–BLM 2004a, Appendix B, p. B–11) and the NE NPR–A Supplemental Integrated Activity Plan/Environmental Impact Statement Record of Decision (USDOI–BLM 2008b, Appendix A, pp. 51–53) contain ROP E–11, an express objective of which is to minimize disturbance to yellow-billed loons from oil and gas activities in the NPR–A (V. Galterio, BLM Alaska State Director, in litt. 2008). This ROP requires oil and gas lessees to conduct multi-year surveys in order to detect nesting yellow-billed loons before the construction of development facilities will be authorized. The ROP further specifies that the design and location of facilities must be such that disturbance to yellow-billed loons is minimized. Based on the best scientific and commercial information currently available, the BLM agrees with the Service that this objective can best be achieved by prohibiting development within 1.6 km (1 mi) of detected nests and 500 m (1,640 ft) around the shorelines of lakes 10.1 ha (25 ac) or larger (Galterio, in litt. 2008).

According to the BLM (Galterio, in litt. 2008), to account for new information that might be obtained in the future (such as information about yellow-billed loons, specific development proposals, and their potential impact on yellow-billed loons), both the Northwest and Northeast Records of Decision would allow for exceptions or deviations from enumerated buffers in limited circumstances. In these circumstances, the exception or deviation would still be required to meet the management objective of minimizing disturbance to the species and would, at a minimum, need to provide the same level of protection that the existing buffers provide. The evaluation of a deviation request that could affect yellow-billed loons would be made with close collaboration and extensive discussions with subject-matter experts at the Service and academia to ensure the conservation of the species.

Although data are not available to determine how effective the stipulations and ROPs will be in minimizing or eliminating adverse impacts to the species, BLM has expressed a commitment to measures aimed at minimizing potential impacts to yellow-billed loons from activities within the purview of BLM's authority as a land management agency (V. Galterio, in litt. 2008). We believe that BLM's stipulations and ROPS will likely be adequate to mitigate potential impacts to the yellow-billed loon in Alaska, if careful monitoring and coordination with the Service continues.

The Service, National Park Service, Alaska Department of Natural Resources, ADFG, and the North Slope Borough entered into a ''Conservation Agreement for the Yellow-billed Loon (*Gavia adamsii*)'' (Conservation Agreement 2006, pp. 1–29) in November 2006. The agreement specifies the goal of protecting the yellow-billed loon and its habitat in Alaska and identifies several strategies for achieving this goal. These strategies include implementing actions to reduce the impacts of oil and gas activities; determining and reducing, if necessary, impacts from subsistence activities; and inventorying, monitoring, and conducting research on the yellow-billed loon. While the agreement demonstrates the parties' good-faith efforts to identify and undertake protective measures for the loon and its habitat, it does not require any specific actions to be undertaken to achieve its goals or specify any time frames for doing so, nor does it establish any quantifiable, scientifically valid parameters by which to measure achievement of the objectives and gauge progress. Thus, we are unable to conclude with sufficient certainty that the agreement is likely to be effective in protecting the yellow-billed loon; so we did not rely on it for our analysis in this finding. This is consistent with the Service's 2003 ''Policy for Evaluation of Conservation Efforts When Making Listing Decisions'' (PECE) policy, which sets forth criteria to be used to determine whether conservation efforts that have yet to be implemented or show effectiveness contribute to making listing a species as threatened or endangered unnecessary.

In summary, Russia is the only nation that includes the yellow-billed loon on an endangered or sensitive species list. Some countries (Canada, Japan, Norway, Russia, and the United States) have laws that prohibit the hunting of migratory birds such as the yellow-billed loon, unless specific regulations are issued, or unless the animals are harvested for subsistence. Provisions to prevent habitat degradation for wildlife and migratory birds or to protect the environment exist, but enforcement levels are unknown and in some countries may not be effective at protecting habitats. In the United States, the MBTA prohibits killing of yellow-billed loons, but does not provide for habitat protection. The Bureau of Land Management, the land management agency with authority over most of the yellow-billed loon's breeding range in Alaska, has instituted protective measures for the species and its habitat. However, existing regulatory mechanisms have not been adequate to eliminate all threats to the yellow-billed loon throughout its range. In particular, despite the fact that the species is closed to subsistence hunting in Alaska, harvest surveys have recorded a substantial level of harvest. We believe that future take at a level consistent with these prior levels would cause a population-level decline that constitutes a threat to the species (see Factor E, below). Therefore, we conclude that existing regulatory mechanisms are inadequate to protect the species.

Factor E: Other Natural or Man-Made Factors Affecting its Continued Existence

Direct Effects of Oil and Gas Development and Vessel Traffic

Yellow-billed loons spend the majority of their life in the marine environment, and are exposed to potential impacts of disturbance, collisions with oil and gas structures, and spills of oil and toxic substances from offshore oil and gas development and other vessel traffic. Offshore oil and gas development might also affect terrestrial yellow billed loon habitats (e.g., through construction of pipelines, support facilities, etc.). Those impacts are discussed under Factor A.

The magnitude of potential impacts from offshore oil and gas development is related to the type, size, and probability of development, and its location in relation to yellow-billed loon distribution and use of an area. Yellow-billed loons are widely dispersed during most of their annual cycle, so the largest potential for impacts to a number of individuals from a single environmental perturbation is in spring, when localized, temporary concentrations occur in migration. Adult loons gather in polynyas and ice leads and along open shorelines near river deltas on the coasts of northern Alaska and Canada. It is likely that there are similar movements and concentrations of yellow-billed loons near Russian breeding areas in spring, but we have not found documentation of such activity. The oil industry is active in these areas, as demonstrated by existing projects such as Pioneer's Ooogrurk field, BP Alaska's Northstar development, and exploration activities in the Chukchi and Beaufort Seas by Shell Inc., ConocoPhillips, and others.

In Alaska, exploration and production are active in Federal and State lease tracts in the Chukchi and Beaufort Seas where loons gather in spring and summer offshore from yellow-billed loon breeding areas on the ACP (USMMS 2008, p. 1; ADNR 2008, p. 1). In Canada, offshore resources are being explored and developed in the southern Beaufort Sea near the McKenzie Delta, where loons gather in polynyas and ice leads in spring to stage before arriving on breeding grounds (Canada Indian and Northern Affairs 2008, p. 1). Offshore drilling and ship traffic occur in the area of the Amundsen Gulf and Cape Bathurst Polynya, where yellow-billed loons are common in spring (Mallory and Fontaine 2004, p. 52). Development could also continue north of yellow-billed loon breeding areas in the arctic Islands, where the Sverdrup Basin contains oil and gas reserves. In western Russia, offshore projects at the western edge of yellow-billed loon breeding grounds in the Barents Sea include the Shtokman gas field currently in planning stages. Gazprom is developing offshore gas fields in the Kara Sea near the Yamal Peninsula. Undiscovered reserves are thought to occur in the East Siberian Sea and the Laptev Sea Shelf in the Arctic Ocean, but exploration has not occurred there (EIA 2008, p. 1; USGS 2007, pp. 1–2).

Oil and gas development are ongoing in migration and wintering areas. An offshore lease sale is planned for Bristol Bay near the wintering location of a yellow-billed loon tagged with a transmitter on Seward Peninsula breeding grounds (U.S. Minerals Management Service 2008, p. 1). In Russia, reserves of oil and gas in the Sea of Okhotsk are large, and just beginning to be exploited. Drilling is planned off the west coast of Kamchatka (Rosneft 2008, p. 1), where tagged yellow-billed loons have passed in migration and wintered. Development around Sakhalin Island in the southern Sea of Okhotsk includes three offshore fields under the Sakhalin I project and two fields under Sakhalin II. Sakhalin II is ''the world's largest integrated, export-oriented oil and gas project,'' including an oil terminal and Russia's first liquefied-natural-gas plant at Aniva Bay (Royal Dutch Shell 2008, p. 1) where tagged yellow-billed loons have passed in migration and wintered. Exploration continues for additional Sakhalin fields. Norway is among the 10 largest producers of oil and gas in the world, with all its production offshore in the North, Norwegian, and Barents Seas (Norwegian Petroleum Directorate 2008, p. 1–1, Figures 3.2–3.5). Production of oil is expected to decline slowly, while gas production will increase, depending on future discoveries (Norwegian Petroleum Directorate, p. 1–3). Seismic studies are occurring in the Lofoten fishing grounds currently closed to oil and gas development under a regional

management plan (Royal Norwegian Ministry of the Environment 2006, pp. 1–144); this area is offshore from the largest concentrations of yellow-billed loons wintering along the Norwegian coast (Strann and Ostnes 2007, Figure 2). The management plan will be updated in 2010, with an opportunity to open the area to drilling.

Air and boat traffic associated with oil and gas development could disturb yellow-billed loons, decreasing foraging success or displacing individuals to less preferred areas at some unknown energetic costs. The severity of disturbance and displacement effects depends upon the duration, frequency, and timing of the disturbing activity. Hence, construction and operation of offshore facilities, which could persist for years, will likely have greater impacts than seismic and exploratory activities, which generally last less than one year. Depending upon the frequency of operations and routes traversed by vessels and aircraft, impacts could range from negligible (few yellow-billed loons encountered at irregular intervals) to substantial (vessels or aircraft repeatedly encounter yellow-billed loons). Expected increases in arctic shipping traffic due to reduced summer sea ice are discussed in the Climate Change section under Factor A.

Offshore oil and gas development would result in both fixed (e.g., offshore platforms) and mobile structures (e.g., supply ships) in the marine environment, posing a potential collision risk for yellow-billed loons. Birds are particularly at risk of collision with objects in their path when visibility is impaired during darkness or inclement weather, such as rain, drizzle, or fog (Weir 1976, p. 6). In a study of avian interactions with offshore oil platforms in the Gulf of Mexico, Russell (2005, pp. 266–297) found that collision events were more common and more severe (by number of birds) during poor weather. Weather conditions that increase collision risk are common in northern waters such as the Bering, Beaufort, and Chukchi Seas. Without knowing the number, location, and design of structures that would result from offshore oil and gas development, it is difficult to estimate the number of yellow-billed loons that would pass by structures during migration. Vulnerability to collision with structures probably varies among species, but we are not aware of information on the propensity of yellow-billed or other loons to collide with structures.

Spills of oil, refined petroleum products (e.g., diesel fuel), or other toxic substances (e.g., drilling mud) from offshore oil and gas development can occur as a result of well blowouts, operational discharges, pipeline failures, tanker or other vessel leaks, and numerous other potential accidental discharges (AMAP 2007, pp. 24–25). A discharge of these products could cause direct mortality of yellow-billed loons or result in indirect effects through habitat degradation or killing prey species.

Mortality following exposure to oil is common in aquatic birds, which are vulnerable to surface oil (Albers 2003, pp. 354–356). External oiling disrupts feather structure, causes matting of feathers, and permits wetting of the bird, and death typically results from hypothermia and drowning (Vermeer and Vermeer 1975, pp. 281–295; Jenssen 1994, pp. 207). Ingesting petroleum through feather preening or consumption of contaminated food or water, and inhalation of fumes from evaporating oil, might not be immediately lethal, but debilitating effects include gastrointestinal irritation, pneumonia, dehydration, red blood cell damage, impaired osmoregulation, immune system suppression, hormonal imbalance, inhibited reproduction, retarded growth, and abnormal parental behavior (Jenssen 1994, pp. 207–211; Hartung and Hunt 1966, pp. 564–569; Miller *et al.* 1978, pp. 315–317; Szaro *et al.* 1981, pp. 791–798; Leighton 1993, pp. 93–99; Fry *et al.* 1986, pp. 455–462; Eppley 1992, pp. 309–311; Fowler *et al.* 1995, pp. 383–387; Walton 1997, pp. 264–267; and Briggs *et al.* 1997, pp. 718–723). These effects can cause death from starvation, disease, or predation, especially in the harsh arctic environment.

In northern seas it is difficult to contain and clean up spilled petroleum products due to ice, high winds, and high seas. A spill can result in persistent environmental contamination by oil and its toxic breakdown products and reduced food resources, resulting in lower survival and hydrocarbon exposure years after visible oil has been abated (Esler *et al.* 2000, p. 843; Trust *et al.* 2000, pp. 399–402).

While a large spill in an area supporting large numbers of yellow-billed loons could have significant adverse effects, we consider the relative probability of such an event to be very low. First, the likelihood of development occurring in areas where loons gather is low. For example, the U.S. Minerals Management Service calculates the probability of commercial success resulting from their lease sale 193 in the Chukchi Sea to be 10 percent (USMMS 2006, p. 2). Second, if development occurs, spills are relatively infrequent, even in the arctic. To date, there have been no large oil spills in the arctic marine environment from oil and gas activities (AMAP 2007, p. 24). No exploratory drilling blowouts have occurred from the 98 wells drilled to date in Alaska's arctic offshore region (USMMS 2007, Appendix A.1, p. 2). In fact, of the 13,463 exploratory wells that have been drilled in the coastal United States, there were 66 blowouts during drilling, only 4 of which resulted in oil spills (range 1 to 200 bbl; average 78 ~ bbl) (USMMS 2007, Appendix A.1, p. 2). Finally, even if a spill occurred, the chances that it would occur close to loons in the seasonal window of time when they are present is also small.

Oil and gas exploration, production, and transportation, as well as spills from other vessel traffic, could also affect migrating and wintering yellow-billed loons, as described below, but we believe this risk factor is minimized because yellow-billed loons are widely distributed and, therefore, at extremely low densities throughout most of the year when they are at sea. The 1989 Exxon Valdez tanker spill killed an estimated 17 to 50 yellow-billed loons in Prince William Sound, Alaska (Earnst 2004a, p. 21). There is oil and gas development in the Sea of Okhotsk, including on and around Sakhalin Island and off the west coast of Kamchatka. Oil and gas development also occurs in yellow-billed loon wintering areas in Norwegian waters, and oil spills at drilling sites and due to vessel accidents occur. Due to the importance of the Norwegian fishing industry, regulation of offshore oil development has been protective. However, it is possible that in 2010 Norway will allow oil development in the Lofoten fishing grounds offshore from a yellow-billed loon wintering area. The Sea of Japan and the Yellow Sea, bordering China, North and South Korea, and Japan, have high levels of vessel traffic subject to oil spill accidents, with several ports among the world's top 25 in cargo transported. In December 2007, the crude oil carrier MT *Hebei Spirit* caused South Korea's worst oil spill to date, estimated at 71,000 bbl in the Yellow Sea near where yellow-billed loons tagged with transmitters have been located in winter. In December 2004, the freighter M/V *Selendang Ayu* grounded and broke in half in the Aleutian Islands of Alaska, spilling more than 8,000 bbl of oil. One yellow-billed loon was observed to be oiled in the vicinity of the spill (Byrd and Daniel 2008, p. 6). Yellow-billed loons wintering in marine waters off

southern Alaska, British Columbia, and around Great Britain could also encounter spills, primarily from vessel traffic.

Yellow-billed loons face the possibility of oil spills throughout their range. The one breeding population for which we have population trend data, the ACP population, is stable or slightly declining at present. We would expect a steep decline if cumulative oil spills were affecting this population, which winters in Asian waters. We do not have evidence that marine oil spills are causing population-level effects to yellow-billed loons on the ACP. The Asian wintering grounds are likely to harbor the most oil spills due to vessel accidents compared to other wintering areas, so it is reasonably likely that breeding populations that winter elsewhere are not at greater risk than the birds that winter in Asia.

In summary, at present we believe the risk to yellow-billed loons from offshore oil and gas development and shipping traffic accidents to be low. Moreover, the one breeding population for which we have population trends does not appear to be declining steeply due to this risk factor. Although the amount of oil and gas development and shipping traffic will likely increase in the future, the associated risk is reasonably likely to be partly or wholly offset by improved technologies and regulation, such as the U.S. Oil Pollution Act of 1990. Also, the species' wide distribution and extremely low densities throughout most of the year when birds are at sea reduces the risk of population-level impacts from any single event. As offshore oil and gas development and shipping traffic continue, individual yellow-billed loons will likely continue to be negatively affected as a result of collisions with vessels or structures and oil spills. However, we cannot reliably predict that the species will be affected at the population level, given the considerable uncertainty of the location of such events and the effectiveness of the design and operational spill cleanup methods that may be employed. Therefore, we find that oil and gas development and vessel traffic is not a threat to the yellow-billed loon now or in the foreseeable future.

Subsistence Harvest

Subsistence harvest of yellow-billed loons in the Bering Strait has been reported at levels that we expect would cause impacts to the species in the foreseeable future. Although we have concerns about the degree of accuracy of the reported numbers of yellow-billed loons harvested, as discussed below, we believe that the likely magnitude of actual harvest levels constitutes a threat to the species rangewide.

Subsistence hunting of wild birds, including loons, is an important component of the customs, traditions, and economies of many cultural groups in the arctic. Subsistence is defined in U.S. Federal and State law as the ''customary and traditional uses'' of wild resources for a variety of purposes, including food, clothing, fuel, transportation, construction, art, crafts, sharing, and customary trade (Wolfe 2000, p. 1). Yellow-billed loons are generally not a preferred food in some parts of their arctic range, but their skin and feathers are used for ceremonial purposes (Paige *et al.* 1996, appendices; Georgette 2000, p. 19; Syreochkovskiy 2008, p. 2), and they are shot for other reasons, such as for taxidermy, to chase them from fishing nets, or out of curiosity (Syreochkovskiy 2008, p. 2). Discussions between St. Lawrence Island, Alaska hunters, and Service biologists confirmed that Bering Strait hunters target loons for harvest (Ostrand in litt. 2009, p. 1). A Service biologist working with hunters on St. Lawrence Island in the spring rarely observed hunters with harvested loons in their possession (Benter in litt. 2008, p. 1), although he has observed hunters targeting loons for harvest (Benter pers. comm. 2009).

Although it is clear that loons are harvested for subsistence, there are challenges to assessing the magnitude of harvest and biases inherent in the process. Harvest surveys have been conducted in many arctic communities, but they have varied in geographic coverage, methodology and analysis, and level of detail; thus, comparing among areas or detecting trends over time is difficult (SHSAC 2003, p. 5). Most survey data are collected through recall interviews conducted a month or more after harvest, resulting in varying and unknown levels of recall error. Sampling designs might inadequately survey rarely taken species (SHSAC 2003, p. 15), and there have been no surveys specifically targeting yellow-billed loons. As a result, most yellow-billed loon harvest estimates have a high level of variance and yield results of unknown accuracy. In some surveys, loons are not identified to species; in others misidentification of species harvested probably occurs but to an unknown degree. To consider misidentification issues, we present some data below on other loon species reported in harvest surveys.

I. Alaska

Surveys Conducted Prior to Migratory Bird Subsistence-Harvest Regulations

As stated in Factor D, yellow-billed loons are not open for subsistence hunting in Alaska under migratory bird subsistence-harvest regulations. Prior to the establishment of Federal regulations authorizing subsistence harvest for migratory bird species in 2003, subsistence harvest surveys for migratory birds were conducted sporadically, and coverage varied considerably among surveys.

Yellow-billed loons migrate through the Chukchi and Bering Sea, making them available for harvest during spring and fall migration in northwest Alaska. In the Northwest Arctic Borough (the area around Kotzebue, Alaska) harvest surveys (from 1994–1998; Georgette 2000, pp. 1–218), no yellow-billed loons were reported, but 71 common, 2 arctic, 6 red-throated, and 1 unknown loon were reported, with identification of species noted as uncertain at times (Georgette 2000, p. 10). Loons comprised generally less than one percent of the total bird harvest (Georgette 2000, p. 19). A one-year survey of the two villages on St. Lawrence Island in the Bering Strait from 1995–1996 reported 40 yellow-billed loons and 290 common, 81 Pacific, and 15 unknown loons harvested (ADFG and Kawerak 1997, p. 2). Concerns about misidentification of species, particularly identification of common loons, which are rare in the Bering Strait, are discussed below.

Yellow-billed loons migrate along the coast of the Yukon/Kuskokwim Delta and Bristol Bay regions, so harvest in spring and fall is possible. Because yellow-billed loons do not breed in these regions, reports of summer and egg harvest suggest misidentification. Below we report the long-term harvest survey record for these areas. Because reports give summary results overlapping the pre- and post-2003 regulation period, we report the entire survey record here, including post-2003 results.

Yellow-billed loons have been reported in almost every annual Yukon-Kuskokwim Delta harvest survey (conducted 1985 to present, except 2003, with methodology changes in 2001 and 2002; Wentworth 2007b, p. 12). The 2001–2006 5-year average yellow-billed loon harvest was 44 ± 78 *SD* (standard deviation, a measure of the dispersion of the data around the mean) (range 0–183) for the Yukon/Kuskokwim Delta (calculated from Wentworth 2007b, p. 36 and USFWS *et al.* 2008, Table 2006–17a). Yellow-billed

loon eggs were reported taken in 14 of 20 years, with an annual average of 14 eggs per year estimated for 2001 through 2005 (Wentworth 2007b, pp. 37–41).

Yellow-billed loons have been reportedly taken in every Bristol Bay region survey (since 1995, except no surveys in 2000 and 2003, surveys were limited to Togiak NWR in 1996, 1998, and 2006, and methodology changed in 2001 and 2002; Wentworth 2007a, pp. 1–2). The 2001–2005 Bristol Bay region average yellow-billed loon harvest was 78 ± 128 *SD* (range 5–269) (Wentworth 2007a, p. 22). From 1995–2005, the only eggs reported in Bristol Bay were in 1997, when 27 eggs were estimated taken (Wentworth 2007a, pp. 23–24).

Harvest Surveys Conducted Subsequent to Migratory Bird Subsistence-Harvest Regulations

In 2004, a new Alaska-wide subsistence-harvest survey, including spring, summer, and fall seasons, was initiated subsequent to the 2003 implementation of migratory bird subsistence-harvest regulations. Under the new regulations, areas of Alaska eligible for migratory bird subsistence-harvest are divided into regions that are surveyed periodically (map available at *http://alaska.fws.gov/ambcc/Regulations.htm*). The new survey has yet to be conducted simultaneously within a year in all villages or all regions (USFWS *et al.* 2008, p. 3), and the 2004–2006 summary report states that the results should be used with caution due to possible inaccuracies, unreliable data, and insufficient sample size (USFWS *et al.* 2008, p. 3). Within the area covered by the new survey, yellow-billed loons are most likely to occur in the North Slope, Northwest Arctic, and Bering Strait/Norton Sound regions during nesting and in Bristol Bay and Yukon/Kuskokwim regions during migration; they were reported as harvested in the Bering Strait/Norton Sound, Bristol Bay, North Slope, and Yukon/Kuskokwim Delta regions in 2004–2006 (Table 1). The largest number of yellow-billed loons and other loon species were estimated for the Bering Strait/Norton Sound region (Table 2).

TABLE 1—ESTIMATED HARVEST OF YELLOW-BILLED LOONS (EXCLUDING EGGS) IN ALASKA REGIONS REPORTING TAKE OF THE SPECIES IN THE YEARS 2004–2006. NO OTHER REGIONS REPORTED YELLOW-BILL LOON TAKE. DATA EXTRACTED FROM TABLES IN USFWS ET AL. 2008

Region	Year							Total
	2004			2005			2006	
	Estimated harvest	95% CI	Season[a]	Estimated harvest	95% CI	Season	Estimated harvest	
Bering Strait	317	271–530	Spring Summer Fall	45	45–123	Spring Summer	NS[b]	362
Bristol Bay	10	8–30	Fall	5	2–22	Spring	0	15
YKD	4	3–16	Spring	12	([c])	Spring Summer Fall	0	16
North Slope	NS			3	2–14	Summer	NS	3
Total	331			65			0	396

CI = confidence interval
[a] Seasons that yellow-billed loons were reported as harvested.
[b] NS = region not surveyed in that year.
[c] For Yukon/Kuskokwim Delta (YKD) in 2005, 11 yellow-billed loons reported in the Kuskokwim River subregion (95 percent CI 8–53) and one reported in North Coast subregion (95 percent CI 1–23).

TABLE 2—ESTIMATED HARVEST OF LOONS FOR THE BERING STRAIT/NORTON SOUND REGION IN 2004 AND 2005. DATA EXTRACTED FROM TABLES IN USFWS ET AL. 2008

Species	Year			
	2004		2005	
	Number	95% CI	Number	95% CI
Yellow-billed loon	317	271–530	45	45–123
Common loon	405	345–889	891	871–1438
Pacific loon	498	425–772	33	18–115
Red-throated loon	26	22–89	15	10–82

We recently received preliminary subsistence-harvest estimates for 2007 (Naves 2008, pp. 1–30). For 2007, Naves (2008, pp. 1–31) reported results by subregion rather than by region as reported previously; thus these observations are not directly comparable to data in Tables 1 and 2 and are not included therein. Naves (2008, p. 7) reported that an estimated 1,077 (95 percent CI = 808–1,347) yellow-billed loons and 2,492 (95 percent CI = 2,158–2,826) common loons were harvested for a Bering Strait/Norton Sound subregion that includes two villages on St. Lawrence Island and one on Little Diomede Island, called the St. Lawrence-Diomede Islands subregion (SL-DI subregion). This estimated SL-DI subregion yellow-billed loon harvest was allocated among seasons with 5 birds estimated harvested in spring, 362 in the summer, and 711 in the fall. Estimated harvest of common loons in the SL-DI subregion were 166 in spring, 560 in summer, and 1,766 in fall (Naves 2008, p. 7). Harvest of 76 Pacific loons

(95 percent CI = 19–134) and 366 red-throated loons (95 percent CI = 221–511) was also estimated for the subregion (Naves 2008, p. 7). Yellow-billed loons were not reported for any other subregion in the Bering Strait/Norton Sound Region. The Barrow subregion of the North Slope region was the only other surveyed area that reported harvest of yellow-billed loons in 2007, with an estimated 84 (95 percent CI = 32–135) yellow-billed loons harvested (Naves 2008, p. 15).

Interpretation of the 2007 loon harvest estimates requires consideration of several factors (beyond their magnitude and potential population-level impact, which will be discussed later). First, the confidence intervals (which are mathematical estimates of the reliability of the estimate, and in this case are expressed as a percent of the estimated value) surrounding the estimates of both yellow-billed and common loons are comparatively small. The 2007 survey results for the SL–DI subregion have a 95 percent CI that is only 25 percent of the estimate for yellow-billed loons and 13 percent for common loons (Naves 2008, p. 7); these are much smaller than earlier estimates given for the entire Bering Strait/Norton Sound region (for example, the 2005 95 percent CI was 174.2 percent of the estimate for yellow-billed loons and 61.4 percent for common loons (USFWS *et al.* 2008, Table 2005–2a)). These smaller CI values indicate increased precision in the 2007 subregional estimate compared to the earlier regional estimates, which reflects large sample size (82 of 318 households (26 percent) sampled) and low variation among households (indicating that most households reported taking fairly comparable numbers of loons).

A second consideration in interpreting the large estimate of yellow-billed loon harvest for 2007 is possible misidentification. Large numbers of common loons are reported as harvested in the SL/DI subregion where they are a rare to uncommon visitor (Fay and Cade 1959, p. 100; Kessel 1989, p. 66; North 1994, p. 3; Armstrong 1995, p. 23; McIntyre and Barr 1997, p. 2; Lehman 2005, p. 15). The report described above of 290 common loons taken on St. Lawrence Island in 1995–1996 (ADFG and Kawerak 1997, p. 2) is considered by Lehman (2005, p. 15) to result from misidentification because only two verified records of this species from the island are known to date. Similarly, common loons reported as harvested from the Bering Strait/Norton Sound region in 2004 and 2005 (Table 2) likely also include other loon species, possibly including yellow-billed loons.

A potential source of misidentification is the probable presence in the fall of juvenile loons whose plumage resembles adult basic (i.e., non-breeding or winter) plumage. It is difficult to differentiate among loon species in this plumage, and survey forms do not illustrate this plumage or highlight ways to distinguish among species. It is unknown how many common loons move through the Bering Strait, but as described above, the number is thought to be small since they have rarely been seen on St. Lawrence Island. Therefore, if misidentification is attributable to confusion between yellow-billed and common loons, the actual harvest of yellow-billed loons is likely even greater than that reported. It is also possible that Pacific and red-throated loons are misidentified as yellow-billed and common loons, although they are notably smaller. If so, this would result in actual harvest of yellow-billed loons being less than that reported.

We considered the possibility that a large number of households in the subregion misidentified loons due to survey deficiencies, and we considered the possibility that this problem was worse in 2007 than in earlier years, resulting in a higher estimated harvest than in previous years. The survey forms show color pictures of birds exclusively in breeding plumage, and survey respondents are asked to mark the number taken next to the pictures. The lack of depictions of winter and immature plumages in the survey form is a likely problem for harvest reported in the fall, when immature birds are likely to be harvested. There is no need for the respondent to identify the name of the bird, making it less likely that cultural differences in nomenclature would cause systemic misidentification. The surveyors were trained in a standard manner for all surveys across the state in all years, using a manual developed over many years. In the Bering Strait/Norton Sound region, the surveyors were provided with several bird identification books to assist them, although it is unknown how and how often they used the books during surveys (Ostrand in litt. 2009, p. 1). In summary, we found that misidentification could be occurring because the survey form includes only breeding plumages. We found no reason to conclude that the survey was conducted any differently in 2007 than in previous years.

Above we noted the large inter-annual variation in harvest estimates of yellow-billed loons for the Bering Strait/Norton Sound region (Table 2); this variation is increased with the addition of the large estimated harvest in the 2007 survey (Naves 2008, p. 7). Large inter-annual variation in estimated harvest of yellow-billed loons could represent measurement error for a relatively constant rate of harvest, or it could represent actual variation in harvest among years. Schmutz (in litt. 2008, p. 1) observed that some yellow-billed loons fitted with transmitters in 2002, 2003, and 2007 on Alaskan breeding grounds moved to marine waters near St. Lawrence Island before migrating south, but others, including all eight birds fitted with transmitters in 2008, moved from Alaskan breeding grounds to Kolyuchin Bay on the north side of the Chukotka Peninsula, and crossed overland to the southwest over the peninsula and into Anadyr Bay, thereby avoiding the St. Lawrence Island area. Thus, migratory behavior may vary from year to year based on some unknown environmental factor, and loon harvest could vary with changes in the number of loons moving past hunting areas in different years.

Because the 2007 estimated harvest was substantially higher than earlier estimates, we evaluated issues specific to the 2007 survey that might help explain this difference. Other than the fact that the survey for all three seasons was conducted at the end of the fall season, survey protocols were followed, and no other factors were identified to explain the high estimate (Ostrand in litt. 2009, p. 1). Conducting the survey at the end of the year means that the respondents would have to recall what they harvested months earlier, which could reduce the accuracy of the survey, especially for the earlier seasons.

Although we examined potential flaws in the harvest survey data and concluded that some birds could have been misidentified, we believe the data are reliable enough to identify the order of magnitude of likely harvest. We conclude that on average, hundreds of yellow-billed loons are probably taken annually in the Bering Strait region. In addition, tens are likely taken in other parts of Alaska, particularly the North Slope.

To evaluate the effect of this harvest on the yellow-billed loon, we examined what we know about the number of birds that move through the Bering Strait. As described in the Species Biology section, above, all 29 marked Alaskan breeding birds used the Bering Strait or Chukotka Peninsula during migration. There are an estimated 3,000 to 4,000 Alaskan breeding birds. It is likely that, due to their proximity, 3,000 to 5,000 eastern Siberian breeding yellow-billed loons also migrate through the Bering Strait region. Observations of

yellow-billed loons during migration on the Beaufort Sea provide evidence that at least some Canadian breeding birds use this migration route, most likely the 3,750 to 6,000 breeding birds estimated to occur on Banks and Victoria Islands and the adjacent arctic mainland coast. Thus, we believe it is likely that a large part of the rangewide population moves through the Strait and is subject to harvest there. We do not know whether the actual rangewide breeding population is closer to 16,000 or 32,000, but as discussed in the Population Size section, we believe it is likely closer to 16,000.

We next evaluated whether hundreds of yellow-billed loons being harvested annually would be unsustainable to the rangewide population. We examined a population model developed by the U.S. Geological Survey (USGS) to test the sensitivity or response of the population to a range of possible harvest levels (Table 3; Schmutz 2009, p. 15). The model was constructed to begin with stable populations (i.e., lambda = 1.00), and then examined whether harvest caused additional declines. The model considered a range in harvest mortality rates and population sizes to reflect our uncertainty about these parameters. We believe the model includes the entire range of possible values for the size of the affected population.

The model suggests that for all scenarios, harvest would cause an otherwise stable population to decline (i.e., lambda declines from 1.00 to values below 1.00) (Table 3). The annual average values for harvest that we believe are most likely (i.e., hundreds; best approximated in Table 3 by the column corresponding to a harvest of 317 birds) and the population size we believe is subjected to the harvest (i.e., approximately 16,000 plus 1 and 2 year old birds; best approximated in Table 3 by the row corresponding to a population size of 18,764, which includes 1 and 2 year olds) show that a hypothetical stable population that experienced added harvest of 317 birds would decline by half in 41 years, or less if the harvest is larger or varies among harvest estimates for recent years (Table 3). Even if there are 37,528 yellow-billed loons in the rangewide population subject to harvest (which we think is unlikely, as discussed above), a harvest of 317 birds would cause the population to decline by half in 83 years. We believe this harvest and associated declines would be unsustainable to the rangewide population, causing a long-term decrease in abundance that would be difficult to reverse due to the low reproductive potential of the species. It is important to note that this analysis does not take into account that additional mortality, such as harvest in other parts of Alaska, Russia, or Canada, or from other sources, could exacerbate the rate of decline from a stable population.

Table 3. Model results of the effects of various harvest scenarios on trend and population size of yellow-billed loons. The starting model predicted a stable population (trend = 1.0). This model used productivity data from yellow-billed loons on the Colville Delta, and survival rates allocated among age classes similar to Mitro et al. (2008) for common loons, but with an adjustment factor to achieve hypothetical population stability so that the model could evaluate likely population response to varying levels of harvest. Thus, the starting, stable population shown in the first column represents a population without harvest. Reference population sizes used breeding population sizes of 4,000, 10,000, 16,000 and 32,000 breeding birds, and were then adjusted to include an additional population component comprised of individuals (likely 1- and 2-year olds) that remain at sea and are not counted during summer surveys of tundra habitats. The next three data columns represent three starting levels of harvest corresponding to recent harvest estimates for the Bering Straits region. The fourth data column represents population response to harvest levels that vary among years, which reflects reported variation in harvest and satellite tracking data that indicate inter-annual variation in migratory behavior through the Bering Strait. For all harvest levels, the mortality rate, rather than mortality number, from harvest is kept constant across the years of each population projection. In each cell, there are two numbers. The first is annual population growth rate, given the indicated harvest and the population that such harvest is allocated to. Second is the number of years from present until the population falls below half of current size. These harvest estimates and corresponding predicted population responses do not consider possible additional harvest occurring outside of the Bering Straits region in other portions of the species' life cycle. This model assumes hunting mortality is additive and not compensatory. From Schmutz 2009, p. 15.

	Beginning harvest level to set mortality rate			
Reference population	45	317	1,077	Annually rotate between 45, 317, and 1,077
N = 4,508	0.9900 70	0.9297 10	0.7611 3	0.8937 6
N = 10,372	0.9957 162	0.9695 23	0.8962 7	0.9538 15
N = 18,764	0.9976 295	0.9832 41	0.9426 12	0.9745 27
N = 37,528	0.9988 601	0.9916 83	0.9713 24	0.9873 54

In summary, although there is uncertainty about the reported numbers of yellow-billed loons harvested in Alaska, these surveys represent the best information available to us at this time. We believe that the data are reliable enough to conclude it is likely that recent annual average harvest of yellow-billed loons in Alaska is in the hundreds. Based on this information, the large number of yellow-billed loons from Alaskan, Russian, and Canadian

breeding areas that are likely to use the Bering Strait in migration, and the model results presented in Table 3, we conclude that the potential impact of the Alaska harvest on the rangewide yellow-billed loon population is significant. It is possible that recent high harvest estimates represent a new phenomenon not yet reflected in population trend information, although we do not have information on whether the harvest will increase or decrease in the future. Harvest at the present magnitude, even if occurring every few years, will cause a rangewide decline that constitutes a threat to the yellow-billed loon.

II. Russia

The Red Data Book of the Russian Federation (2001, p. 367) states ''during the nesting period, loons are often killed/harvested by the indigenous population for food and pelts particularly in the northeast of Russia.'' Other information comes from a recent review from the Russian Academy of Sciences to the Service, which reported current yellow-billed loon harvest of approximately 200 per year, including for protection of fishing nets (Syroechkovskiy 2008, p. 1–2). The review also noted that in former times yellow-billed loons were occasionally shot by indigenous peoples for ritual purposes and raw materials, and conversely, some tribes in the Yakutian arctic recognize loons as sacred species and never shoot them (Syroechkovskiy 2008, p. 1).

The basis for the Russian estimate of yellow-billed loon harvest above is unknown. Few surveys have been conducted (limited information from Yakutia and Chukotka), the species' range has not been adequately sampled, and the species has an uneven distribution across Russia (Syroechkovskiy 2008, p. 1). No subsistence harvest information is available from the Taymyr Peninsula, one of the two core areas of the breeding range in arctic Russia and the only region where Syroechkovskiy (2008, p. 1–2) reported hunting of the species as a food source.

Other harvest surveys have occurred in Russia, however. Unidentified loons were reported taken in two Providensky communities in 1997 and 1998 as part of subsistence harvest surveys for marine mammals (Ainana *et al.* 1999, p. 83; Ainana *et al.* 2000, pp. 66 & 71). No loons were listed in 1999 (Ainana *et al.* 2001), but this report included fewer and less detailed reports of birds. Service-funded waterfowl (eider) subsistence harvest surveys in 19 of 100 northeastern Russia (Yakutia and Chukotka regions) communities within 100 km (62 mi) of the coastline by the Goose, Swan, and Duck Study Group of Northern Eurasia from 2002–2005 (Syroechkovski and Klokov 2007, p. 8) included loons. Yellow-billed loons reported (by previous year recall of hunters) varied among villages (range 0–58), with only three villages reporting harvesting 10 or more birds. Harvest was greatest in northern Chukotka, where the species nests and where one village reported egg harvest of 44 eggs in one year. The species' range was not completely surveyed because loons were not the focus of the survey (Syroechkovski and Klokov 2007, p. 1). However, based on these surveys, as well as the nationwide estimate provided by the Russian Academy of Sciences (Syroechkovskiy 2008, pp. 2), we estimate tens to possibly 200 yellow-billed loons are harvested by subsistence hunters annually in Russia, virtually all affecting the Russian breeding population (the breeding population is estimated to be 5,000 to 8,000). The effect of an annual harvest of 200 birds on a population of this size is significant, particularly if the population is subject to additional harvest in migration through the Bering Strait (as described under the Alaska section above).

III. Canada

Yellow-billed loons are thought to breed in several of the Native Land Claims in northern Canada, but primarily in Inuvialuit and Nunavut. The land claims are in different phases of settlement, and harvest data are only available for those areas where claims have been settled and Renewable Resource Boards (RRBs) are in operation to jointly manage wildlife resources (*http://www.mb.ec.gc.ca/nature/ecb/da02s11.en.html,* accessed October 2008). The RRBs all use similar methodology to determine wildlife harvest levels for their areas of jurisdiction. Reported possible sources of error in these harvest estimates include enumeration, coverage and non-response, measurement and questionnaire design, recall failure, and strategic response bias (Priest and Usher 2004, pp. 35–42).

Harvest survey data are available from the Nunavut, Inuvialuit, and Sahtu regions, which encompass the vast majority of the yellow-billed loon's breeding range in Canada (see map at *http://www.mb.ec.gc.ca/nature/ecb/da02s11.en.html,* accessed November 25, 2008), from 1988 to 2003. Nunavut harvest surveys (Priest and Usher 2004) were conducted from 1996 through 2001. Five communities reported harvesting yellow-billed loons from May through October, while twenty-two communities did not report harvest of yellow-billed (or unidentified) loons. The estimated yearly harvest (reported as a range) was 2.6–8.2 yellow-billed and 1.4–5.8 unidentified loons (Priest and Usher 2004; tables). Inuvialuit harvest surveys were conducted from 1988 to 1997 (Inuvialuit Harvest Study 2003). Loons, including yellow-billed loons, were reported harvested from May through July in three of six communities surveyed. Estimated mean annual harvest of yellow-billed loons for the region was 10 ± 8 *SD,* and 1 ± 2 *SD* additional unidentified loons per year (Inuvialuit Harvest Study 2003; tables). Sahtu Region surveys were conducted from 1998 to 2003 (Bayha and Snortland 2002, 2003, 2004). (Yellow-billed loons occur only in the northern Sahtu region.) No yellow-billed loons were reported harvested, but a total of 5 unidentified loons were harvested over the 6 survey years (less than 1 per year) from May to August (Bayha and Snortland 2002, 2003, 2004; tables), with no extrapolation to the entire Sahtu region. Based on these data, we estimate low tens of yellow-billed loons are harvested by subsistence hunters annually in Canada.

IV. Conclusion for Subsistence

Our ability to accurately estimate the magnitude of subsistence harvest of yellow-billed loons rangewide is compromised by incomplete harvest survey coverage of the species' range, possible misidentification among species, sampling shortcomings, and our limited ability to allocate harvest during migration to source breeding populations. Correctly assessing subsistence harvest of a rare species, such as the yellow-billed loon, requires intensive surveys to adequately sample villages within the species' range to increase precision in the harvest estimate. The data do tell us that yellow-billed loons have been harvested, probably averaging in the hundreds annually, which we believe would be unsustainable relative to the overall yellow-billed loon population.

Despite the limitations described above, the best available information indicates that, throughout its range, on average, hundreds of yellow-billed loons from multiple breeding areas are harvested annually by subsistence hunters. Population modeling suggests that the number of yellow-billed loons being harvested in the Bering Strait area of Alaska alone is likely unsustainable. In addition, up to several hundred yellow-billed loons could be taken annually on Russian breeding grounds,

and small amounts of harvest are reported for other areas in Alaska and Canada. The lack of precision of the population trend information for Alaska could be preventing us from detecting the impact of this harvest on the population, or the high harvest estimates could represent a new phenomenon not yet manifested in our population trend estimates. The harvest is also likely having an impact on breeding populations that are not being monitored; population trends for Canada and Russia are not known. We have no reason to believe that the current level of subsistence harvest of yellow-billed loons will change in the future. Because we believe that the rangewide population of yellow-billed loons is subject to unsustainable levels of harvest, we find that subsistence harvest is a threat to the species rangewide.

Fishing Bycatch (Commercial and Noncommercial)

Incidental take (''bycatch'') from commercial and subsistence fisheries poses a risk to yellow-billed loons due to direct mortality caused by entanglement or accidental drowning in gear. Gear type, location, and timing affect both frequency and intensity of bycatch rates. Yellow-billed loons are believed to be attracted to nets by entangled fish or other loons (J. Bacon in litt. 2008, p. 1). Yellow-billed loons spend the majority of the year foraging in coastal waters; therefore, coastal fisheries are more likely to encounter loons than pelagic fisheries. Thus, our primary concern is assessing the current level of bycatch occurring in nearshore gill-net fisheries that overlap the yellow-billed loon's range. Immature yellow-billed loons (1–2 year olds), which are thought to remain on adult wintering grounds (Earnst 2004, p. 11), might be exposed to commercial fisheries overlapping these areas year-round. Adult yellow-billed loons could be exposed to commercial fisheries on the wintering grounds and over a larger area of marine coastlines during migration, as well as to subsistence fishing during migration and while on the nesting grounds.

I. Commercial Fishing Bycatch

Loon bycatch has been documented in commercial drift-net, gill-net, trap-net, and longline fisheries. Compared to other fisheries, gill-net fisheries have the greatest potential to affect loons. For example, a 1998 study of bycatch in winter gill-net fisheries on the U.S. mid-Atlantic coast found that loons (red-throated and common) accounted for 89 percent of all avian bycatch (Forsell 1999, p. 23). While loon species have been recorded as bycatch in several longline fisheries (Brothers *et al.* 1999), in general, longlines attract surface-feeding seabirds rather than species that dive to feed.

While commercial fishing occurs across marine waters inhabited by yellow-billed loons, primarily within the species' wintering grounds, there are several challenges to assessing the impact of these fisheries on the species. Bycatch monitoring programs are infrequent and do not exist for many fisheries in the yellow-billed loon's wintering grounds. This is particularly true for the Yellow Sea, which is historically one of the most intensively fished areas in the world (LME 48 2004, p. 1). Where programs do exist, loons are often not identified to species level or are categorized as ''other.'' These problems might explain low reported levels of yellow-billed loon bycatch. In addition, actual bycatch in any given fishery is likely to be low due to the species' low densities and widespread distribution.

Alaska

The Alaskan commercial fisheries most likely to catch yellow-billed loons are gill-net fisheries in the Gulf of Alaska (Prince William Sound and Cook Inlet) and Southeast Alaska. While these fisheries overlap spatially with areas used by yellow-billed loons, they occur primarily during summer when adults and an unknown proportion of immatures have moved north to arctic habitats.

No bycatch data are available from gill-net fisheries in Southeast Alaska, but limited seabird bycatch data are available from some Gulf of Alaska fisheries with marine mammal bycatch monitoring programs. For example, salmon gill-net fisheries in Prince William Sound and Unimak Island area in 1990 to 1991 recorded low levels of loon bycatch (1 unknown loon, 2 red-throated loons, and 2 common loons from more than 9,000 sets; Wynne *et al.* 1991, p. 30; Wynne *et al.* 1992, pp. 47–48). Another program for Cook Inlet salmon drift-net and set-net fisheries (1999–2000) also recorded low loon numbers (2 common loons and 1 unidentified loon in 540 sets observed; Manly 2006, pp. 27 & 32). Of all loons observed near nets in 2000, about half were identified as common loons, and half were unknown loon species (Manly 2006, p. 40).

Alaska longline, pot, and trawl fisheries are less likely to affect this species due to the loon's foraging behaviors and location of these fisheries. While these fisheries overlap the wintering grounds of the yellow-billed loon in the Bering Sea, Aleutians, and Gulf of Alaska from September to April, they are conducted offshore. An observer program exists for the Alaskan demersal groundfish fisheries (including longline, pot, and trawl for certain groundfish species) but no loon bycatch data exist because all loon species are classified as part of the category ''other'' along with several other species not typically caught by these gear types. Less than one percent (0–351 individual birds) of all reported bycatch in these fisheries has been recorded as ''other'' for years 1993 through 2006 (AFSC 2006a, pp. 9–15; AFSC 2006b, pp. 5–8; AFSC 2007, pp. 5–9). In addition, bycatch rates in the longline fisheries have declined in recent years (highs in 1998–1999) due to the implementation of seabird-avoidance measures (AFSC 2006a, p. 2).

In summary, bycatch of loon species, as well as unknown loons, has been reported in limited observer-program coverage of Alaskan gill-net fisheries that occur within the yellow-billed loon's range. While no bycatch of yellow-billed loons has been reported, available data are limited and lacking for some parts of the species' range. In addition, there is no available information that suggests take levels will change in the future.

Washington State and British Columbia

Loon entanglement has been reported in commercial gill-net fisheries in Washington's Puget Sound, Hood Canal, Willapa Bay, Grays Harbor, and the Columbia River. At least 1 yellow-billed loon, 3 unidentified loons, and 11 common loons were documented as bycatch in the mid-1990s (Erstad *et al.* 1994, p. 6; Pierce *et al.* 1994, p. 18; Erstad *et al.* 1996, p. 12; and Jeffries *et al.* 1996, cited in Richardson *et al.* 2000, p. 20). Based on season, these birds are presumably non-breeders. Fishery-wide estimates were not extrapolated.

In British Columbia, common and Pacific loons have been identified as bycatch in sockeye gill net fisheries, but comprise less than one percent of total bycatch reported from net fisheries from 1995–2001 (one individual of each species was identified, for an estimated take of 31 of each species) (Smith and Morgan 2005, p. 25) (although a high proportion of bycatch was unidentified). Based upon known seabird and commercial fishing locations, Queen Charlotte Sound, the Scott Islands, and Cape St. James are of concern for bycatch from March–June, and the Western coast of Vancouver Island from June–September (Smith and Morgan 2005, p. 29). These areas are all in

yellow-billed loon wintering grounds, and non-breeding yellow-billed loons might remain there throughout summer.

In summary, bycatch of loon species, including one yellow-billed loon, has been reported in limited observer-program coverage of Washington and British Columbia gill-net fisheries that occur within the yellow-billed loon's range. The available data indicate that individuals (particularly non-breeders) are vulnerable to bycatch in these fisheries, but do not allow estimation of the number of yellow-billed loons taken. We also have no information to predict whether current take levels will increase or decrease in the future.

Russian Far East

Russian drift-net fisheries for salmon, as well as net fisheries for herring, mackerel, and Pacific saury occur in the northwest Pacific Ocean (Northridge 1991, p. 52). Bycatch data do not exist for most of these fisheries (WWF 2004, p. 56), except for limited data from the salmon drift-net fisheries. Seabird bycatch was monitored for the Japanese salmon drift-net fishery in the Russian Exclusive Economic Zone within the Sea of Okhotsk and Kuril Islands from 1993 to 1998 and western Bering Sea from 1993 to 2001. This fishery takes place from May through July. Yellow-billed loons comprised less than or equal to 0.02 percent of reported bycatch, with an extrapolated estimate of 89 yellow-billed loons, likely non-breeders, within all fishery zones from 1993–1998, and an additional 45 individuals in the Bering Sea zone from 1999–2001 (Artukhin *et al.* 1999, pp. 96 & 101; Artukhin *et al.* 2000, p.122; Artukhin *et al.* 2001, p. 83). The highest bycatch rate (0.4 percent) for all fishery zones occurred in the area bordering the Northern edge of the Sea of Okhotsk (from 1993 to 1998) (Artukhin *et al.* 1999, p. 96; Artyukhin and Burkanov 2000, p. 108). Overall, catch rates of yellow-billed loons were similar to but slightly higher than those reported for other loons (arctic and red-throated). Unidentified birds comprised less than or equal to 0.05 percent of bycatch. No yellow-billed loons have been reported as bycatch in the Russian salmon drift-net fishery (Y. Artukhin in litt. 2008, p. 1), which exceeded the Japanese salmon harvest in 2003 (WWF 2004, p. 56).

Longline and trawl fisheries also occur in the Russian Far East by Russian, Japanese, Korean, and American companies (Artyukhin *et al.* 2006, p. 7). These year-round fisheries for cod, halibut, and rockfish are located primarily in western Bering Sea, Pacific Ocean waters of Kamchatka, and Sea of Okhotsk (Artyukhin *et al.* 2006, p. 6). A seabird observer program for the Russian longline fishery was conducted in these waters from 2003 to 2005 during a project to test methods and equipment to reduce incidental seabird bycatch (Artyukhin *et al.* 2006). No loons were reported as bycatch (Artyukhin *et al.* 2006, p. 19).

In summary, yellow-billed loon bycatch has been reported in drift-net fisheries within the Sea of Okhotsk and the western Bering Sea. Due to the timing of the fisheries, most individuals were likely non-breeders. The data indicate vulnerability of the species to incidental capture in drift-net gear, but do not allow estimation of the total number of yellow-billed loons taken. In addition, there is no available information that suggests take levels will change in the future.

Yellow Sea, Sea of Japan, and Coastal Japan

The Yellow Sea, one of the most heavily fished areas of the world, is classified by the Global International Waters Assessment as severely affected by overfishing, with major fisheries currently occurring at a low level compared to 30 years ago (LME 48 2004). Both the Yellow Sea and Sea of Japan are primarily fished by Japan, China, Korea, and the Russian Federation nearshore gill-net fleets (Northridge 1991, pp. 52–54; LME 48 2004; LME 50 2004). There are also a considerable number of Japanese gill-net fishing vessels in Japanese coastal waters, with coastal vessels estimated to be in the thousands (DeGange *et al.* 1993, p. 207). Various gill-net fisheries (i.e., Spanish mackerel (*Scomberomorus niphonius*), silver pomfret (*Pampus argenteus*), and Chinese herring (*Illisha elongata*)) occur during different months of the year (Northridge 1991, pp. 53 & 54; Zhang and Kim 1999, p. 167), including overlap in time and location with non-breeders and adult wintering yellow-billed loons. The level of seabird bycatch from most of these coastal fisheries is unknown (DeGange *et al.* 1993, p. 209). Longline fisheries conducted by Japan, China, and the Republic of Korea are also known to occur (Brothers *et al.* 1999), but bycatch information is unavailable.

In summary, no data are available on the level of yellow-billed bycatch from gill-net fisheries in the Yellow Sea, Sea of Japan, or coastal Japan. Due to the vulnerability of the species to incidental capture in gill nets and extensive activity of these fisheries overlapping in timing and location with the loon's adult wintering range, bycatch likely occurs. However, we have no means to assess the current level of take. In addition, there is no available information that suggests take levels will change in the future.

Norway

Fisheries occur along the entire coastline of Norway, with northern areas most intensively fished (Bakken 1998, p. 28). Atlantic cod (*Gadus morhua*) is the most important fishery, and other species fished include capelin, flatfish, haddock, herring, lumpsucker, and salmon (Bakken 1998, p. 28). The Lofoten fishery, a major fishery that includes one-fifth of Norway's total fishermen, primarily targets Atlantic cod, from February to April, and uses both gill nets and long lines, along with hand lines and seines (Jentoft and Kristoffersen 1989, pp. 356–357). Limited data exist on seabird bycatch in these fisheries, but loons have been reported as bycatch in the cod, herring, haddock, and flatfish gill-net fisheries all along the Norwegian coast (Bakken 1998, pp. 28 & 36). There are anecdotal reports of yellow-billed and common loon bycatch in gill nets, especially in the Lofoten Islands, and in Troms County to a lesser extent (Strann and Østnes 2007, p. 4). Although the extent of winter bycatch is unknown, Strann and Østnes (2007, p. 4) suggest, based on anecdotal observations, that take of yellow-billed and common loons might be increasing in the Lofoten Islands.

In summary, yellow-billed loons, as well as other loon species, have been anecdotally reported as bycatch in Norwegian gill-net fisheries. We have no means to extrapolate available information to estimate the total number of yellow-billed loons taken. In addition, other than anecdotal information that suggests take levels in the Lofoten Islands are increasing, we do not have evidence that take levels will change in the future.

II. Subsistence-Fishing Bycatch

Subsistence fishing is an important component of the customs, traditions, and economies of many indigenous groups in the arctic. Across the breeding range of the yellow-billed loon, rural residents fish primarily using gill nets, although some angling and ice jigging occurs (Craig 1987, p. 17). Gill-net use is localized near villages and fish camps, in marine inlets and lagoons, lakes, and rivers, depending on season and target fish species (Craig 1987, p.17, Bacon in litt. 2008). During the breeding season, yellow-billed loons will forage in large lakes close to their nests (Earnst 2004, p. 4), as well as other nearby lakes, rivers, and marine areas (Earnst 2004, pp. 6–7), where the potential for

bycatch in subsistence fisheries exists. Because yellow-billed loons are widely dispersed across their nesting grounds, however, a large proportion of the breeding population is likely not exposed to localized subsistence fishing.

Limited observations confirm that yellow-billed loons have been inadvertently caught in subsistence gill nets in Canada, Russia, and the United States, although the level of bycatch is not extensively documented. In Canada, researchers on Victoria Island documented yellow-billed loon entanglement in nets on several occasions, including one instance where seven birds were found dead in nets in a single day (Sutton 1963 p.1; Parmelee *et al.* 1967). In Russia, Syroechkovski (2008, p. 2) reported that two reasons for subsistence harvest were accidental entanglement in fishing nests and deliberate shooting to scare loons from fishing areas. The Red Data Book of the Russian Federation states that yellow-billed loon mortality in fishing nets is the main threat to the species (Red Data Book 2001, pp, 366–367), with bycatch rates described as ''catastrophic'' in the Chukchi Peninsula region (Red Data Book 2001, pp, 366–367). We could not locate data or a source for that assessment.

In Alaska, information on loon bycatch from subsistence fishing is available only for the ACP, where Inupiat Eskimos use yellow-billed loon parts for subsistence and ceremonial purposes (Hepa and Bacon 2008, p. 1). With implementation of Alaska spring/summer migratory bird subsistence-harvest regulations in 2003, the yellow-billed loon was officially closed to harvest (Hepa and Bacon 2008, p. 1).

In 2005, an exception for the North Slope region was incorporated into the regulations allowing possession for subsistence use of up to 20 (total for the region each year) yellow-billed loons inadvertently caught in subsistence nets (50 CFR Part 92). As a result of this provision, the North Slope Borough Department of Wildlife Management compiles data on incidental bycatch from a variety of sources. Two to nine yellow-billed loons (and some red-throated and Pacific loons) were reported as found dead in nets in each of three years (2005 to 2007) (Acker and Suydam 2006, p. 1; Acker and Suydam 2007, p. 1; Hepa and Bacon 2008, p. 10). Small numbers of loons, including yellow-billed loons, were also reported as found alive and released. All yellow-billed loons collected in 2007 were reportedly utilized for subsistence, including ceremonial purposes (Hepa and Bacon 2008, p. 2). These numbers are likely a minimum estimate of yellow-billed loon subsistence bycatch because not all fishers were contacted (Hepa and Bacon 2008, p. 2).

In conclusion, yellow-billed loon bycatch in commercial fisheries has been documented anecdotally or by observer programs in Washington State, Russia, and Norway. No data exist from large portions of the species' wintering range (Yellow Sea, Sea of Japan, and coastal Japan), but bycatch is likely to occur in extensive gill net fisheries that overlap with wintering yellow-billed loons. We lack information to explain the difference in catch rates reported from various observer programs. We do not have enough information to extrapolate bycatch estimates to areas lacking data, or to determine the number of birds taken as bycatch over time.

For subsistence fisheries, yellow-billed loon bycatch has been documented either anecdotally or in reporting programs on the breeding grounds in Alaska, Canada, and Russia. Data are limited or non-existent for large parts of the species' range. Because yellow-billed loons are widely dispersed across the landscape on the nesting grounds, while subsistence fishing is localized, we suspect a large proportion of the breeding population is not exposed to subsistence fishing. We do not have enough information to extrapolate subsistence bycatch accounts to areas lacking data or to evaluate likely population-level affects.

Yellow-billed loon bycatch data are primarily anecdotal and cannot be extrapolated to estimate total bycatch levels or rates. Although yellow-billed loon mortality from commercial and subsistence gill-net fisheries currently affects yellow-billed loons at the individual level, we do not have enough evidence of bycatch to show population-level impacts. The ACP breeding population is the only one for which we have trend information. That trend is slightly declining or stable, and so we do not have evidence that bycatch is currently affecting the species at the population level. In addition, there is no available information that suggests take levels will change in the future. Therefore, we find that bycatch is not a threat to yellow-billed loons now or in the foreseeable future.

Direct Effects of Contaminants Not Associated With Oil and Gas

Although contaminants can affect species through a variety of mechanisms, below we discuss direct effects on individuals or reproduction, such as mortality or embryo viability, from contaminants other than those associated with oil and gas (discussed under Factor A and earlier in Factor E). Indirect effects of contaminants or pollution, such as alterations in prey abundance, were also discussed under Factor A.

Ecological characteristics can be used to estimate the relative risk of contaminants to a species. These include trophic status (species higher in a food chain are more likely to accumulate persistent pollutants), pollution point sources, location (including migratory pathways), and lifespan (long-lived individuals have more time to accumulate persistent compounds). Yellow-billed loons are relatively long-lived birds, and being piscivorous are also trophically elevated. Both arctic breeding areas and temperate wintering areas have documented pollution. It is therefore appropriate to examine potential risk to yellow-billed loons from contaminant exposure.

Yellow-billed loons spend the majority of the year in southern wintering areas, which are primarily coastal and are more likely to have elevated environmental concentrations of persistent organic pollutants (POPs), such as organochlorine pesticides and polychlorinated biphenyls (PCBs), compared to northern breeding areas. Twenty-four out of 29 yellow-billed loons fitted with transmitters on Alaska breeding grounds wintered in Asian waters (Schmutz 2008, p. 1) that have been demonstrably affected by pollution. For example, Ma *et al.* (2001, pp. 133–134) reported high levels of persistent organic pollutants (DDT and PCBs) and petroleum-derived contaminants in the intertidal zone of the Bohai and Yellow Seas off China. In Korea, PCBs were greater in fish and birds from industrially contaminated areas of the Nakdong estuary than non-industrial areas (Choi *et al.* 1999, p. 233). Other studies document contamination of Asian sea sediments and biota, including fish and birds, that support potential exposure for wintering migratory birds such as yellow-billed loons (e.g., Nie *et al.* 2005, pp. 537–546; Oh *et al.* 2005, pp. 217–222; Daoji and Daler 2004, pp. 107–113; Guruge *et al.* 1997, pp. 186–193). In a test of exposure to persistent contaminants in Asian wintering areas compared to northern breeding areas, Kunisue *et al.* (2002, p. 1,397) found that herring gulls (*Larus argentatus*) and other migratory birds nesting on Lake Baikal in Russia had higher levels of organochlorine contaminants on arrival from Asian wintering areas than at the end of the breeding season.

Further, sympatrically nesting red-throated loons from the ACP had PCB

concentrations and formulations (containing the most toxic PCB congeners) great enough, when compared to thresholds developed for other species, to postulate teratogenic (causing abnormal development) or other reproductive effects (Schmutz *et al.* in review, p. 19). Preliminary satellite telemetry data indicate that these red-throated loons winter in Asian marine waters (Schmutz *et al.* in review, p. 1), similar to yellow-billed loons. These data compelled us to examine PCBs in yellow-billed loon eggs from the ACP. We found that although PCBs were present in yellow-billed loon eggs (n = 45, collected over three years), preliminary data show the most toxic individual PCB congeners (PCBs 77 and 81) present in red-throated loon eggs were generally not present in yellow-billed loon eggs, and therefore the PCB toxicity in yellow-billed loon eggs (TEQ (toxic equivalency quotient, a measure of toxicity) range = 0.176—10.39 picograms/gram (pg/g); A. Matz, U.S. Fish and Wildlife Service, unpubl. data) was much lower than in red-throated loon eggs (TEQ mean ± SE = 237 ± 129 pg/g), and lower than published thresholds for embryonic toxicity in other avian species, such as 227 pg/g in great blue heron (*Ardea herodias*) eggs (Hoffman *et al.* 1996, pp. 191). We are currently evaluating other contaminants in yellow-billed loon eggs and blood from the coastal plain and the Seward Peninsula of Alaska, but based on the red-throated loon data (presented in Schmutz *et al.* in review), we were most concerned about the PCBs.

In conclusion, we have few data on most of the contaminants that could directly affect yellow-billed loons throughout their range. Additional range-wide data on productivity, population trends, and concentrations of persistent contaminants will allow us to more fully evaluate this risk factor. However, data from an ongoing multi-agency study in Alaska show that yellow-billed loon eggs do not have concentrations of toxic PCBs thought to affect reproduction. Because yellow-billed loons nesting in Canada, and some proportion of those nesting in Russia, likely winter in Asian seas or on the Pacific coast of North America, we assume that PCB and other persistent contaminant concentrations in their eggs would be equal to or less than those from the ACP, which are known to winter in Asia. The contaminant loading for yellow-billed loons wintering in the North Sea is unknown, but those loons represent a small proportion of the total population. In the future, yellow-billed loons could continue to be exposed to the contaminants they are exposed to now, as well as emerging persistent contaminants such as polybrominated compounds. However, the Service and its partners plan to monitor contaminant exposure, mortality, and productivity in Alaska. Future contaminant risks will be identified and efforts made to address them before they cause population-level declines that threaten the continued existence of the species. Therefore, we find that contaminants other than those associated with oil and gas are not a threat to the yellow-billed loon now or in the foreseeable future.

In our analysis of Factor E, we identified and evaluated other risk factors, including: Oil and gas development and vessel traffic; subsistence harvest; commercial- and subsistence-fishery bycatch; and contaminants other than those associated with oil and gas. Based on our review of the best available information, we find that subsistence harvest is a threat to the yellow-billed loon now and in the foreseeable future.

Foreseeable Future

In considering the foreseeable future as it relates to the status of the yellow-billed loon, we considered the stressors acting on the species. We considered the historical data to identify any relevant existing trends that might allow for reliable prediction of the future (in the form of extrapolating the trends). We also considered whether we could reliably predict any future events that might affect the status of the species, recognizing that our ability to make reliable predictions in the future is limited by the variable quantity and quality of available data. Further, predictability varies significantly among risk factors, and in some cases, even geographically within a single factor.

Based on the lack of proposed onshore oil and gas development within the yellow-billed loon's range in Canada, it is reasonably likely that no population-level impacts will be incurred at least until development occurs. In contrast, in Russia, although it is likely that oil and gas development will increase in the future, our understanding of the species' distribution is so limited that it is difficult to reliably assess the likely impact of even existing oil and gas development on the yellow-billed loon, much less the impact of projected future development on the loon. In Alaska, some increased terrestrial oil and gas development is likely to occur beginning in the next decade, and the period from exploration through production to abandonment is estimated at 70 years. In the case of climate change, current models suggest that global temperatures are likely to continue to rise for up to 50 years, even if greenhouse gas emissions were curbed today (Meehl *et al* 2007, p. 749). However, we are not currently able to link projected climate changes to changes in arctic freshwater habitats or their ability to support loons, and so our ability to foresee the future is limited until research and climate modeling improve our predictive ability. Although climate-change models show continued decrease in the summer arctic ice sheet, and it is possible that shipping will, therefore, increase, we have no data to describe to what degree shipping pathways or frequency is likely to change. With respect to subsistence harvest, the best available data show substantial inter-annual variation in loons harvested in Alaska during migration, which could be related to inter-annual variation in yellow-billed loon migratory behavior. Modeled scenarios show that even when harvest varies among years within the range defined by recent harvest estimates, the yellow-billed loon population continues to decline over time. Although we have no information that subsistence harvest throughout the range of the yellow-billed loon will either increase or decrease in the future, we have no reason to believe that harvest of yellow-billed loons will not continue to vary from year to year within the range of levels incurred over recent years. Our ability to assess current bycatch in fishing nets is limited by poor data, and we have no empirical basis with which to predict even the direction of trends in the effects of this activity into the future. Although the amount of oil and gas development and shipping traffic will likely increase in the future, the associated risk is reasonably likely to be partly or wholly offset by improved technologies and regulation. We do not have evidence that marine pollution or contaminants will have an increased or decreased effect on yellow-billed loons in the future.

Available data indicate a stable or slightly declining trend for the ACP population. Available data do not allow us to establish a trend for other breeding populations. Overall numbers of yellow-billed loons are cautiously estimated between 16,000 and 32,000 birds on breeding grounds worldwide, which, considering the wide distribution of the species most of the year, is enough to make it unlikely that the species is at risk from stochastic events because of its small numbers. Thus, the foreseeable

future includes consideration of the ongoing effects of current risk factors and threats at comparable levels.

Significant Portions of the Range

The Act defines an endangered species as one ''in danger of extinction throughout all or a significant portion of its range,'' and a threatened species as one ''likely to become an endangered species within the foreseeable future throughout all or a significant portion of its range.'' The term ''significant portion of its range'' is not defined by the statute. For the purposes of this finding, a significant portion of a species' range is an area that is important to the conservation of the species because it contributes meaningfully to the representation, resiliency, or redundancy of the species. The contribution must be at a level such that its loss would result in a decrease in the ability to conserve the species.

If an analysis of whether a species is threatened or endangered in a significant portion of its range is appropriate, we engage in a systematic process that begins with identifying any portions of the range of the species that warrant further consideration. The range of a species can theoretically be divided into portions in an infinite number of ways. However, there is no purpose in analyzing portions of the range that are not reasonably likely to be significant and threatened or endangered. To identify only those portions that warrant further consideration, we determine whether there is substantial information indicating that (i) the portions may be significant and (ii) the species may be in danger of extinction there or likely to become so within the foreseeable future. In practice, a key part of this analysis is whether the threats are geographically concentrated in some way. If the threats to the species are essentially uniform throughout its range, no portion is likely to warrant further consideration. Moreover, if any concentration of threats applies only to portions of the range that are unimportant to the conservation of the species, such portions will not warrant further consideration.

On the basis of an analysis of factors that may threaten the yellow-billed loon, we have determined that listing is warranted throughout its range. Therefore, it is not necessary to conduct further analysis with respect to the significance of any portion of its range at this time. We will further analyze whether threats may be disproportionate and warrant further consideration as an SPR at such time that we develop a proposed listing determination.

Finding

In our review of the status of the yellow-billed loon, we carefully examined the best scientific and commercial information available. We identified a number of potential threats to this species, including: Oil and gas development, marine pollution and overfishing, exposure to contaminants, climate change, subsistence- and commercial-fishing bycatch, and subsistence harvest. To determine whether these risk factors individually or collectively put the species in danger of extinction throughout its range, or are likely to do so within the foreseeable future, we first considered whether the risk factors were causing a population decline, or were likely to do so in the future.

Information on population size and trends for the yellow-billed loon is limited. Overall population size is unknown, but probably at the low end of the range between 16,000 and 32,000 loons on breeding grounds. Population trends are available for the ACP breeding grounds from waterfowl surveys, and these surveys suggest that the ACP breeding population is stable or slightly declining. Limited surveys have been conducted only in small parts of the Russian and Canadian ranges, so population sizes for these ranges are gross approximations, and no information on trends is available. There are reports of range contractions at the edges of the Russian breeding range, but these reports are unsubstantiated, and there are also unsubstantiated reports of Russian breeding areas where yellow-billed loon numbers could be increasing. Therefore, based on the best available information, we find that the only trend information we have indicates a stable or slightly declining trend for the ACP population.

We evaluated existing and potential stressors on the yellow-billed loon to determine what affects on the species were currently occurring, whether these stressors were likely to increase or decrease in the future, and which of the stressors may be expected to rise to the level of a threat to the species, either rangewide or at the population level.

We examined several stressors for which we have little information on whether they will increase in the future. We did not find that bycatch by subsistence or commercial fishing, pollution in wintering habitats, or contaminants are threats to the yellow-billed loon. An unknown number of individuals are taken in fisheries, which adds to other forms of mortality.

Next we considered whether any of the risk factors are likely to increase within the foreseeable future. We believe that oil and gas activities in various parts of the loon's range are likely to increase in the future. In Alaska, we determined that Federal and State of Alaska regulations currently in place will likely mitigate future effects of terrestrial oil and gas development, and therefore development in Alaska is not considered a threat to the species now or in the foreseeable future. In Russia, terrestrial oil and gas development is occurring at the western edge of the Russian breeding range, and it is unknown whether this activity overlaps with loon nesting habitat. Most importantly, even if a local range contraction has occurred, we find no reason to conclude impacts extend beyond the local scale at the edge of the range. In Canada, there has been little overlap between oil and gas development and the species' range, and we are aware of none projected for the near future. We also found that although marine oil and gas development is likely to increase in various parts of the loon's range, the wide distribution and low density of the species in the marine environment make it unlikely that associated impacts including marine oil spills will put the species at risk of extinction.

Climate change is likely to continue for at least the next 50 years, but there is substantial uncertainty as to how climate change, described in Factor A, will affect yellow-billed loon terrestrial, freshwater, and marine habitats. For example, if native prey fish species are extirpated, other suitable prey species may colonize the area, replacing extirpated species to some degree. We do not know whether large-scale degradation of continuous permafrost, where the majority of yellow-billed loons breed, and the subsequent impacts to lake levels and vegetation will occur on a scale that will affect loon populations in the foreseeable future. Climate-change effects on the temperate-latitude wintering habitat of the yellow-billed loon include increases in ocean temperature and decreases in primary productivity and dissolved oxygen levels, which might affect numbers and distribution of prey species. The magnitude and form of these effects are highly uncertain, but would most likely involve northward shift of prey items, which could be mirrored by their predators such as wintering yellow-billed loons.

There are multiple hypothetical mechanisms associated with climate change that could potentially affect loons and their breeding and non-breeding habitats. Unlike documented and predicted declines in sea ice, an

obligate habitat for other arctic species such as polar bears, we lack predictive models on how climate change will affect yellow-billed loon terrestrial, freshwater, and marine habitats. Manifestations of climate-mediated changes throughout arctic and temperate yellow-billed loon habitats will emerge if reliable, predictive models are developed, but currently there is little certainty regarding the timing, magnitude, and net effect of impact. Therefore, given current limitations in available data and climate models, we find that climate change is not a threat to yellow-billed loons now or in the foreseeable future. However, currently unknown detrimental effects of climate change could be additive to other threats and stressors on the population.

We also considered whether any of the ongoing risk factors began recently enough that their effects are not yet manifested in a long-term decline in population numbers, but are likely to have that effect in the future. Information from recent subsistence harvest surveys indicate potentially high levels of harvest compared to earlier surveys. There are not enough years of data, and there is not enough precision in the accuracy of the surveys, to indicate whether there is a trend of increasing harvest. All marked Alaskan breeding birds used the Bering Strait or Chukotka Peninsula during migration; in addition, it is likely that most Russian breeding loons and at least some Canadian breeding birds also migrate through the Bering Strait region. Thus, we believe it is likely that a large part of the rangewide population moves through the Strait and is subject to harvest there. The best available information indicates that, on average, hundreds of yellow-billed loons from breeding areas throughout its range are harvested annually by subsistence hunters. Population modeling suggests that the number of yellow-billed loons being harvested in the Bering Strait area of Alaska alone is likely unsustainable. The lack of precision of the population trend information for Alaska could be preventing us from detecting the impact of this harvest on the population, or the high harvest estimates could represent a new phenomenon not yet taken into account in our population trend estimates. The harvest is also likely having an impact on breeding populations that are not being monitored in Canada and Russia. Because we believe that the rangewide population of yellow-billed loons is subject to unsustainable levels of harvest, we find that subsistence harvest is a threat to the species rangewide. In light of this level of subsistence harvest occurring despite existing MBTA regulations that prohibit such harvest, we also find that inadequate regulatory mechanisms are a threat to the species.

We next considered whether the existing level of threats causes us to conclude that the species is in danger of extinction now or in the foreseeable future. If population size were to decline or the range were to contract, recovery or re-colonization would likely occur slowly. Individuals in the population are so widespread during most of the year that high adult mortality is unlikely. However, during migration, yellow-billed loons are subject to subsistence harvest that appears to be unsustainable based on the best available information. The total population is uncertain, but based on the best available information, the population, estimated at 16,000 to 32,000 birds on breeding grounds, could decline substantially if unsustainable harvest continues. Future subsistence harvest in Alaska is enough in itself to constitute a threat to the species rangewide. In addition, up to several hundred yellow-billed loons could be taken annually on Russian breeding grounds, and small amounts of harvest are reported for other areas in Alaska and Canada. Other stressors discussed above may not rise to the level of a threat individually, but when taken collectively with the effects of subsistence hunting in other areas, may reduce the rangewide population even further. Given the small population and the existence of subsistence harvest and inadequate regulatory mechanisms as threats, we believe the species is likely to become in danger of extinction within the foreseeable future. Therefore, we find that listing the yellow-billed loon throughout its range is warranted.

While we find that listing the yellow-billed loon is warranted, an immediate proposal to list this species is precluded by other higher priority listing actions, which we address below.

We have reviewed the available information to determine if the existing and foreseeable threats pose an emergency. We have determined that an emergency listing is not warranted for this species at this time because, within the current distribution of the species throughout its range, there are at least some populations of the yellow-billed loon that exist in relatively natural conditions that are unlikely to change in the short-term. However, if at any time we determine that emergency listing of the yellow-billed loon is warranted, we will initiate an emergency listing.

Future Conservation

We have determined that the listing of the yellow-billed loon is warranted but precluded by pending proposals for other species with higher listing priorities and actions. Our recommendation of a listing priority number of 8 (described below) will provide time and opportunity to implement conservation and better monitor the species' status and threats. Here we provide a summary of our commitment to the conservation of yellow-billed loons.

As described in the ''Conservation Agreement for the Yellow-billed Loon (*Gavia adamsii*),'' the Service and its partners plan to: (1) Implement specific actions to protect yellow-billed loons and their breeding habitats in Alaska from potential impacts of land uses and management activities, including oil and gas development; (2) inventory and monitor yellow-billed loon breeding populations in Alaska; (3) reduce the impact of subsistence activities (including fishing and hunting) on yellow-billed loons in Alaska; and (4) conduct biological research on yellow-billed loons, including response to management actions.

We believe that the strategies outlined in the agreement demonstrate the partners' commitment to prioritize yellow-billed loon conservation in Alaska. To fulfill the first strategy, we will continue to work with partners to maintain their commitment to actions protecting loons. In particular, we will work closely with the BLM to monitor and maintain protection of loons on NPR-A, as expressed in their recent memorandum on the yellow-billed loon (Galterio, in litt. 2008, pp. 1–3). For the second strategy, we will continue to inventory yellow-billed loons through our waterfowl surveys on the ACP and through loon-specific surveys currently in operation on the Seward Peninsula, and we will investigate the potential for initiating yellow-billed-loon-specific surveys. For the third strategy, we are working closely with the Alaska Migratory Bird Co-management Council (AMBCC) and the State of Alaska to acquire reliable, verifiable information on subsistence harvest and fishing bycatch levels in Alaska, and to substantially increase education and law enforcement efforts to reduce levels of this threat. Finally, we support the ongoing research by the U.S. Geological Survey and others on yellow-billed loons in Alaska, and will continue to advocate for further research where it will inform management of yellow-billed loons, such as understanding effects of disturbance on nesting loons

to ensure that buffers separating loons from human activity are adequate.

Research and management of yellow-billed loons are needed outside Alaska, and we will support and advocate for such work. In particular, we need to understand population sizes and trends for Russian and Canadian breeding populations, migration corridors, and where breeding populations winter. We also encourage managers in both countries to take an active role conserving loons where substantial industrial development occurs, or where other threats such as subsistence harvest or fishing bycatch occur. Finally, habitat conditions in wintering grounds, especially in Asia, need to be understood and managed so that they continue to support loons. In particular, it will be critical to increase awareness of pollution impacts in marine habitats in Asia, and to develop regulations to reduce pollution levels, so that these wintering areas continue to support yellow-billed loons.

Preclusion and Expeditious Progress

Preclusion is a function of the listing priority of a species in relation to the resources that are available and competing demands for those resources. Thus, in any given fiscal year (FY), multiple factors dictate whether it will be possible to undertake work on a proposed listing regulation or whether promulgation of such a proposal is warranted but precluded by higher-priority listing actions.

The resources available for listing actions are determined through the annual Congressional appropriations process. The appropriation for the Listing Program is available to support work involving the following listing actions: proposed and final listing rules; 90-day and 12-month findings on petitions to add species to the Lists of Endangered and Threatened Wildlife and Plants (Lists) or to change the status of a species from threatened to endangered; annual determinations on prior ''warranted but precluded'' petition findings as required under section 4(b)(3)(C)(i) of the Act; proposed and final rules designating critical habitat; and litigation-related, administrative, and program management functions (including preparing and allocating budgets, responding to Congressional and public inquiries, and conducting public outreach regarding listing and critical habitat). The work involved in preparing various listing documents can be extensive and may include, but is not limited to: gathering and assessing the best scientific and commercial data available and conducting analyses used as the basis for our decisions; writing and publishing documents; and obtaining, reviewing, and evaluating public comments and peer review comments on proposed rules and incorporating relevant information into final rules. The number of listing actions that we can undertake in a given year also is influenced by the complexity of those listing actions; that is, more complex actions generally are more costly. For example, during the past several years, the cost (excluding publication costs) for preparing a 12-month finding, without a proposed rule, has ranged from approximately $11,000 for one species with a restricted range and involving a relatively uncomplicated analysis to $305,000 for another species that is wide-ranging and involving a complex analysis.

We cannot spend more than is appropriated for the Listing Program without violating the Anti-Deficiency Act (see 31 U.S.C. 1341(a)(1)(A)). In addition, in FY 1998 and for each fiscal year since then, Congress has placed a statutory cap on funds which may be expended for the Listing Program, equal to the amount expressly appropriated for that purpose in that fiscal year. This cap was designed to prevent funds appropriated for other functions under the Act (for example, recovery funds for removing species from the Lists), or for other Service programs, from being used for Listing Program actions (see House Report 105–163, 105th Congress, 1st Session, July 1, 1997).

Recognizing that designation of critical habitat for species already listed would consume most of the overall Listing Program appropriation, Congress also put a critical habitat subcap in place in FY 2002 and has retained it each subsequent year to ensure that some funds are available for other work in the Listing Program: ''The critical habitat designation subcap will ensure that some funding is available to address other listing activities'' (House Report No. 107–103, 107th Congress, 1st Session, June 19, 2001). In FY 2002 and each year until FY 2006, the Service has had to use virtually the entire critical habitat subcap to address court-mandated designations of critical habitat, and consequently none of the critical habitat subcap funds have been available for other listing activities. In FY 2007, we were able to use some of the critical habitat subcap funds to fund proposed listing determinations for high-priority candidate species; however, in FY 2008 we were unable to do this because all of the critical habitat subcap funds were needed to address our workload for designating critical habitat.

Thus, through the listing cap, the critical habitat subcap, and the amount of funds needed to address court-mandated critical habitat designations, Congress and the courts have in effect determined the amount of money available for other listing activities. Therefore, the funds in the listing cap, other than those needed to address court-mandated critical habitat for already listed species, set the limits on our determinations of preclusion and expeditious progress.

Congress also recognized that the availability of resources was the key element in deciding whether, when making a 12-month petition finding, we would prepare and issue a listing proposal or instead make a ''warranted but precluded'' finding for a given species. The Conference Report accompanying Public Law 97–304, which established the current statutory deadlines and the warranted-but-precluded finding, states (in a discussion on 90-day petition findings that by its own terms also covers 12-month findings) that the deadlines were ''not intended to allow the Secretary to delay commencing the rulemaking process for any reason other than that the existence of pending or imminent proposals to list species subject to a greater degree of threat would make allocation of resources to such a petition [that is, for a lower-ranking species] unwise.''

In FY 2008, expeditious progress is that amount of work that could be achieved with $8,206,940, which is the amount of money that Congress appropriated for the Listing Program (that is, the portion of the Listing Program funding not related to critical habitat designations for species that are already listed). Our process is to make our determinations of preclusion on a nationwide basis to ensure that the species most in need of listing will be addressed first and also because we allocate our listing budget on a nationwide basis. The $8,206,940 was used to fund work in the following categories: compliance with court orders and court-approved settlement agreements requiring that petition findings or listing determinations be completed by a specific date; section 4 (of the Act) listing actions with absolute statutory deadlines; essential litigation-related, administrative, and listing program management functions; and high-priority listing actions. The allocations for each specific listing action are identified in the Service's FY 2008 Allocation Table (part of our administrative record).

For FY 2009, on September 23, 2008 Congress passed a Continuing

Resolution to operate the Federal government at the FY 2008 level of funding through March 6, 2009 (Pub. L. 110–329). Although we are currently developing the allocations for specific listing actions that we will fund during FY 2009, we anticipate funding work to comply with court orders and court-approved settlement agreements, work on statutorily required petition findings, final listing determinations for those species that were proposed for listing with funds from FY 2008, and continued work on proposed listing determinations for high-priority species.

In FY 2007, we had more than 120 species with a listing priority number (LPN) of 2, based on our September 21, 1983, guidance for assigning an LPN for each candidate species (48 FR 43098). Using this guidance, we assign each candidate an LPN of 1 to 12, depending on the magnitude of threats (high vs. moderate to low), immediacy of threats (imminent or nonimminent), and taxonomic status of the species (in order of priority: monotypic genus (a species that is the sole member of a genus); species; or part of a species (subspecies, distinct population segment, or significant portion of the range)). The lower the listing priority number, the higher the listing priority (that is, a species with an LPN of 1 would have the highest listing priority). Because of the large number of high-priority species, we further ranked the candidate species with an LPN of 2 by using the following extinction-risk type criteria: International Union for the Conservation of Nature and Natural Resources (IUCN) Red list status/rank, Heritage rank (provided by NatureServe), Heritage threat rank (provided by NatureServe), and species currently with fewer than 50 individuals, or 4 or fewer populations. Those species with the highest IUCN rank (critically endangered), the highest Heritage rank (G1), the highest Heritage threat rank (substantial, imminent threats), and currently with fewer than 50 individuals, or fewer than 4 populations, comprised a list of approximately 40 candidate species (''Top 40''). These 40 candidate species have had the highest priority to receive funding to work on a proposed listing determination. As we work on proposed listing rules for these 40 candidates, we are applying the ranking criteria to the next group of candidates with LPN of 2 and 3 to determine the next set of highest priority candidate species.

To be more efficient in our listing process, as we work on proposed rules for these species in the next several years, we are preparing multi-species proposals when appropriate, and these may include species with lower priority if they overlap geographically or have the same threats as a species with an LPN of 2. In addition, available staff resources are also a factor in determining high-priority species provided with funding. Finally, proposed rules for reclassification of threatened species to endangered are lower priority, since as listed species, they are already afforded the protection of the Act and implementing regulations.

We assigned the yellow-billed loon an LPN of 8 based on moderate magnitude and imminent threats. One or more of the threats discussed above is occurring throughout the range of the yellow-billed loon, either in its breeding or wintering grounds, or during migration. However, the primary threat to the species that caused us to conclude listing is warranted is subsistence harvest, despite the species being closed to hunting under the Migratory Bird Treaty Act. Although subsistence harvest is ongoing, the numbers taken have varied substantially between years. For the reasons discussed above, although we believe subsistence harvest is a substantial threat to the species, we have concerns about the precision of the numbers reported. In addition, if changes in management are implemented in the near future, we believe there is time to reduce this threat before it causes further population-level impacts. While we conclude that listing the yellow-billed loon is warranted, an immediate proposal to list this species is precluded by other higher priority listing, which we address below. Therefore, work on a proposed listing determination for the yellow-billed loon was, and will continue to be in the next year, precluded by work on higher priority candidate species (i.e., species with LPN of 2); listing actions with absolute statutory, court ordered, or court-approved deadlines; and final listing determinations for those species that were proposed for listing with funds from FY 2008. This work includes all the actions listed in the tables below under expeditious progress.

As explained above, a determination that listing is warranted but precluded must also demonstrate that expeditious progress is being made to add or remove qualified species to and from the Lists of Endangered and Threatened Wildlife and Plants. (Although we do not discuss it in detail here, we are also making expeditious progress in removing species from the list under the Recovery program, which is funded by a separate line item in the budget of the Endangered Species Program. As explained above in our description of the statutory cap on Listing Program funds, the Recovery Program funds and actions supported by them cannot be considered in determining expeditious progress made in the Listing Program.) As with our ''precluded'' finding, expeditious progress in adding qualified species to the Lists is a function of the resources available and the competing demands for those funds. Given that limitation, we find that we made expeditious progress in FY 2008 and are making progress in FY 2009 in the Listing Program. This progress included preparing and publishing the following determinations:

FY 2008 COMPLETED LISTING ACTIONS (SOME COMPLETED IN FY2009)

Publication date	Title	Actions	FR pages
10/09/2007	90-Day Finding on a Petition to List the Black-Footed Albatross (Phoebastria nigripes) as Threatened or Endangered.	Notice of 90-day Petition Finding, Substantial.	72 FR 57278–57283.
10/09/2007	90-Day Finding on a Petition To List the Giant Palouse Earthworm as Threatened or Endangered.	Notice of 90-day Petition Finding, Not substantial.	72 FR 57273–57276.
10/23/2007	90-Day Finding on a Petition To List the Mountain Whitefish (Prosopium williamsoni) in the Big Lost River, ID, as Threatened or Endangered.	Notice of 90-day Petition Finding, Not substantial.	72 FR 59983–59989.

FY 2008 COMPLETED LISTING ACTIONS (SOME COMPLETED IN FY2009)—Continued

Publication date	Title	Actions	FR pages
10/23/2007	90-Day Finding on a Petition To List the Summer-Run Kokanee Population in Issaquah Creek, WA, as Threatened or Endangered.	Notice of 90-day Petition Finding, Not substantial.	72 FR 59979–59983.
11/08/2007	Response to Court on Significant Portion of the Range, and Evaluation of Distinct Population Segments, for the Queen Charlotte Goshawk.	Response to Court	72 FR 63123–63140.
12/13/2007	12-Month Finding on a Petition To List the Jollyville Plateau salamander (Eurycea tonkawae) as Endangered With Critical Habitat.	Notice of 12-month Petition Finding, Warranted but Precluded.	72 FR 71039–71054.
1/08/2008	90-Day Finding on a Petition To List the Pygmy Rabbit (Brachylagus idahoensis) as Threatened or Endangered.	Notice of 90-day Petition Finding, Substantial.	73 FR 1312–1313.
1/10/2008	90-Day Finding on Petition To List the Amargosa River Population of the Mojave Fringe-Toed Lizard (Uma scoparia) as Threatened or Endangered With Critical Habitat.	Notice of 90-day Petition Finding, Substantial.	73 FR 1855–1861.
1/24/2008	12-Month Finding on a Petition To List the Siskiyou Mountains Salamander (Plethodon stormi) and Scott Bar Salamander (Plethodon asupak) as Threatened or Endangered.	Notice of 12-month Petition Finding, Not Warranted.	73 FR 4379–4418.
2/05/2008	12-Month Finding on a Petition To List the Gunnison's Prairie Dog as Threatened or Endangered.	Notice of 12-month Petition Finding, Warranted.	73 FR 6660–6684.
02/07/2008	12-Month Finding on a Petition To List the Bonneville Cutthroat Trout (Oncorhynchus clarki utah) as Threatened or Endangered.	Notice of Review	73 FR 7236–7237.
02/19/2008	Listing Phyllostegia hispida (No Common Name) as Endangered Throughout Its Range.	Proposed Listing, Endangered	73 FR 9078–9085.
02/26/2008	Initiation of Status Review for the Greater Sage-Grouse (Centrocercus urophasianus) as Threatened or Endangered.	Notice of Status Review	73 FR 10218–10219.
03/11/2008	12-Month Finding on a Petition To List the North American Wolverine as Endangered or Threatened.	Notice of 12-month petition finding, Not warranted.	73 FR 12929–12941.
03/20/2008	90-Day Finding on a Petition To List the U.S. Population of Coaster Brook Trout (Salvelinus fontinalis) as Endangered.	Notice of 90-day Petition Finding, Substantial.	73 FR 14950–14955.
04/29/2008	90-Day Finding on a Petition To List the Western Sage-Grouse (Centrocercus urophasianus phaios) as Threatened or Endangered.	Notice of 90-day Petition Finding, Substantial.	73 FR 23170–23172.
04/29/2008	90-Day Finding on Petitions To List the Mono Basin Area Population of the Greater Sage-Grouse (Centrocercus urophasianus) as Threatened or Endangered.	Notice of 90-day Petition Finding, Substantial.	73 FR 23173–23175.
05/06/2008	Petition To List the San Francisco Bay-Delta Population of the Longfin Smelt (Spirinchus thaleichthys) as Endangered.	Notice of 90-day Petition Finding, Substantial.	73 FR 24611–24915.
05/06/2008	90-Day Finding on a Petition to List Kokanee (Oncorhynchus nerka) in Lake Sammamish, Washington, as Threatened or Endangered.	Notice of 90-day Petition Finding, Substantial.	73 FR 24915–24922.
05/06/2008	12-Month Finding on a Petition To List the White-tailed Prairie Dog (Cynomys leucurus) as Threatened or Endangered.	Notice of Status Review	73 FR 24910–24911.

FY 2008 COMPLETED LISTING ACTIONS (SOME COMPLETED IN FY2009)—Continued

Publication date	Title	Actions	FR pages
05/15/2008	90-Day Finding on a Petition To List the Ashy Storm-Petrel (Oceanodroma homochroa) as Threatened or Endangered.	Notice of 90-day Petition Finding, Substantial.	73 FR 28080–28084.
05/15/2008	Determination of Threatened Status for the Polar Bear (Ursus maritimus) Throughout Its Range; Final Rule.	Final Listing, Threatened	73 FR 28211–28303.
05/15/2008	Special Rule for the Polar Bear; Interim Final Rule.	Interim Final Special Rule	73 FR 28305–28318.
05/28/2008	Initiation of Status Review for the Northern Mexican Gartersnake (Thamnophis eques megalops).	Notice of Status Review	73 FR 30596–30598.
06/18/2008	90-Day Finding on a Petition To List the Long-Tailed Duck (Clangula hyemalis) as Endangered.	Notice of 90-day Petition Finding, Not substantial.	73 FR 34686–34692.
07/10/2008	90-Day Finding on a Petition To Reclassify the Delta Smelt (Hypomesus transpacificus) From Threatened to Endangered.	Notice of 90-day Petition Finding, Substantial.	73 FR 39639–39643.
07/29/2008	90-Day Finding on a Petition To List the Tucson Shovel-Nosed Snake (Chionactis occipitalis klauberi) as Threatened or Endangered with Critical Habitat.	Notice of 90-day Petition Finding, Substantial.	73 FR 43905–43910.
8/13/2008	Proposed Endangered Status for Reticulated Flatwoods Salamander; Proposed Designation of Critical Habitat for Frosted Flatwoods Salamander and Reticulated Flatwoods Salamander.	Proposed Critical Habitat, Proposed Listing, Endangered.	73 FR 47257–47324.
9/9/2008	12-month Finding on a Petition To List the Bonneville Cutthroat Trout as Threatened or Endangered.	Notice of 12-month petition finding, Not warranted.	73 FR 52235–52256.
10/15/2008	90-Day Finding on a Petition To List the Least Chub.	Notice of 90-day Petition Finding, Substantial.	73 FR 61007–61015.
10/21/2008	Listing 48 Species on Kauai as Endangered and Designating Critical Habitat.	Proposed Listing, Endangered; Proposed Critical Habitat.	73 FR 62591–62742.
10/24/2008	90-Day Finding on a Petition To List the Sacramento Valley Tiger Beetle as Endangered.	Notice of 90-day Petition Finding, Not substantial.	73 FR 63421–63424.
10/28/2008	90-Day Finding on a Petition To List the Dusky Tree Vole (Arborimus longicaudus silvicola) as Threatened or Endangered.	Notice of 90-day Petition Finding, Substantial.	73 FR 63919–63926.
11/25/2008	12-Month Finding on a Petition To List the Northern Mexican Gartersnake (Thamnophis eques megalops) as Threatened or Endangered With Critical Habitat; Proposed Rule.	Notice of 12-month petition finding, Warranted but precluded.	73 FR 71787–71826.
12/02/2008	90-Day Finding on a Petition To List the Black-tailed Prairie Dog as Threatened or Endangered.	Notice 90-day Petition Finding, Substantial.	73 FR 73211–73219.
12/05/2008	90-Day Finding on a Petition To List the Sacramento Mountains Checkerspot Butterfly (Euphydryas anicia cloudcrofti) as Endangered with Critical Habitat.	Notice 90-day Petition Finding, Substantial.	73 FR 74123–74129.
12/18/2008	90-Day Finding on a Petition to Change the Listing Status of the Canada Lynx.	Notice 90-day Petition Finding, Substantial.	73 FR 76990–76994.
1/06/2009	Partial 90-Day Finding on a Petition To List 475 Species in the Southwestern United States as Threatened or Endangered With Critical Habitat.	Notice 90-day Petition Finding, Not substantial.	74 FR 419–427.

FY 2008 COMPLETED LISTING ACTIONS (SOME COMPLETED IN FY2009)—Continued

Publication date	Title	Actions	FR pages
2/05/2009	Partial 90-Day Finding on a Petition To List 206 Species in the Midwest and Western United States as Threatened or Endangered With Critical Habitat.	Notice 90-day Petition Finding, Not substantial.	74 FR 6122–6128.

Our expeditious progress also included work on listing actions, which were funded in FY 2008, but have not yet been completed to date. These actions are listed below. Actions in the top section of the table are being conducted to meet deadlines set by a court. Actions in the middle section of the table are being conducted to meet statutory timelines, that is, timelines required under the Act. Actions in the bottom section of the table are high priority listing actions. These actions include work primarily on species with an LPN of 2, and selection of these species is partially based on available staff resources, and when appropriate, include species with a lower priority if they overlap geographically or have the same threats as the species with the high priority. Including these species together in the same proposed rule results in considerable savings in time and funding, as compared to preparing separate proposed rules for each of them in the future.

ACTIONS FUNDED IN FY 2008 BUT NOT YET COMPLETED

Species	Action
Actions With Court Order/Settlement Agreement Deadlines	
SW Bald Eagle DPS	12-month petition finding.
Greater and Western Sage Grouse	12-month petition finding.
Actions With Statutory Deadlines	
Phyllostegia hispida	Final listing.
Black-footed albatross	12-month petition finding.
Mount Charleston blue butterfly	12-month petition finding.
Goose Creek milk-vetch	12-month petition finding.
Mojave fringe-toed lizard	12-month petition finding.
White-tailed prairie dog	12-month petition finding.
Pygmy rabbit (rangewide)	12-month petition finding.
Wyoming pocket gopher	90-day petition finding.
Llanero coqui	90-day petition finding.
American pika	90-day petition finding.
206 species (partially completed)	90-day petition finding.
475 Southwestern species (partially completed)	90-day petition finding.
High Priority Listing Actions	
21 Oahu candidate species (16 plants, 5 damselflies) (18 with LPN =2, 3 with LPN = 3, 1 with LPN =9).	Proposed listing.
3 southeast aquatic species (Georgia pigtoe, interrupted rocksnail, rough hornsnail) [1] (all with LPN = 2).	Proposed listing.
Casey's june beetle (LPN = 2)	Proposed listing.
Sand dune lizard (LPN = 2)	Proposed listing.
2 southwest springsnails (*Pyrgulopsis bernadina* (LPN = 2), *Pyrgulopsis trivialis* (LPN = 2)).	Proposed listing.
3 southwest springsnails (*Pyrgulopsis chupaderae* (LPN = 2), *Pyrgulopsis gilae* (LPN = 11), *Pyrgulopsis thermalis* (LPN = 11)).	Proposed listing.
2 mussels (rayed bean (LPN = 2), snuffbox No LPN)	Proposed listing.
2 mussels (sheepnose (LPN = 2), spectaclecase (LPN = 4),)	Proposed listing.
Ozark hellbender [2] (LPN = 3)	Proposed listing.
Altamaha spinymussel (LPN = 2)	Proposed listing.
5 southeast fish (rush darter (LPN = 2), chucky madtom (LPN = 2), yellowcheek darter (LPN = 2), Cumberland darter (LPN = 5), laurel dace (LPN = 5)).	Proposed listing.
3 Colorado plants (Pagosa skyrocket (*Ipomopsis polyantha*) (LPN = 2), Parchute beardtongue (*Penstemon debilis*) (LPN = 2), Debeque phacelia (*Phacelia submutica*) (LPN = 8)).	Proposed listing.

[1] Funds for listing actions for 3 of these species were also provided in FY 2007.

[2] We funded a proposed rule for this subspecies with an LPN of 3 ahead of other species with LPN of 2, because the threats to the species were so imminent and of a high magnitude that we considered emergency listing if we were unable to fund work on a proposed listing rule in FY 2008.

We have endeavored to make our listing actions as efficient and timely as possible, given the requirements of the relevant law and regulations, and constraints relating to workload and personnel. We are continually considering ways to streamline processes or achieve economies of scale, such as by batching related actions together. Given our limited budget for implementing section 4 of the Act, these actions described above collectively constitute expeditious progress.

The yellow-billed loon will be added to the list of candidate species upon publication of this 12-month finding. We will continue to monitor the status of this species as new information becomes available, and information on the species' distribution, status, and threats will be evaluated every year. In particular, we will work with the AMBCC and the State of Alaska to improve the reliability of subsistence harvest data, and to substantially increase education and law enforcement efforts to reduce levels of these threats. This review will determine if the species should be removed or maintained as a candidate species, or if a change in status is warranted, including the need to make prompt use of emergency listing procedures.

We intend that any proposed listing action for the yellow-billed loon will be as accurate as possible. Therefore, we will continue to accept additional information and comments from all concerned governmental agencies, the scientific community, industry, or any other interested party concerning this finding.

References Cited

A list of the references used to develop this proposed rule is available upon request (see **FOR FURTHER INFORMATION CONTACT**).

Author

The primary authors of this 12-month finding are the staff members of the Fairbanks Fish and Wildlife Field Office (see **FOR FURTHER INFORMATION CONTACT**).

Authority

The authority for this action is section 4 of the Endangered Species Act of 1973, as amended (16 U.S.C. 1531 *et seq.*).

Dated: March 12, 2009.

Rowan W. Gould,

Acting Director, Fish and Wildlife Service.

[FR Doc. E9–6012 Filed 3–24–09; 8:45 am]

BILLING CODE 4310–55–P

Federal Register

Wednesday,
March 25, 2009

Part III

Environmental Protection Agency

40 CFR Part 51

Methods for Measurement of Filterable PM_{10} and $PM_{2.5}$ and Measurement of Condensable Particulate Matter Emissions from Stationary Sources; Proposed Rule

ENVIRONMENTAL PROTECTION AGENCY

40 CFR Part 51

[EPA–HQ–OAR–2008–0348; FRL–8784–5]

RIN 2060–AO58

Methods for Measurement of Filterable PM_{10} and $PM_{2.5}$ and Measurement of Condensable Particulate Matter Emissions From Stationary Sources

AGENCY: Environmental Protection Agency (EPA).

ACTION: Proposed rule.

SUMMARY: This action proposes amendments to Methods 201A and 202. The proposed amendments to Method 201A would add a particle-sizing device to allow for sampling of particulate matter (PM) with mean aerodynamic diameters less than or equal to 2.5 micrometers (μm) ($PM_{2.5}$ or fine PM). The proposed amendments to Method 202 would revise the sample collection and recovery procedures of the method to reduce the formation of reaction artifacts that could lead to inaccurate measurements of condensable particulate matter (CPM). Additionally, the proposed amendments to Method 202 would eliminate most of the hardware and analytical options in the existing method, thereby increasing the precision of the method and improving the consistency in the measurements obtained between source tests performed under different regulatory authorities. Finally, in this notice we are soliciting comments on whether to end the transition period for CPM in the New Source Review (NSR) program on a date earlier than the current end date of January 1, 2011. The proposed amendments would improve the measurement of fine particulates and would help State and local agencies in implementing CPM control measures to attain the $PM_{2.5}$ National Ambient Air Quality Standards (NAAQS) which were established to protect public health and welfare.

DATES: *Comments.* Comments must be received on or before May 26, 2009.

ADDRESSES: Submit your comments, identified by Docket ID Number EPA–HQ–OAR–2008–0348, by one of the following methods:

- *http://www.regulations.gov.* Follow the on-line instructions for submitting comments.
- *E-mail:* Send your comments via electronic mail to *a-and-r-docket@epa.gov.*
- *Fax:* (202) 566–9744.
- *Mail:* Methods for Measurement of Filterable PM_{10} and $PM_{2.5}$ and Measurement of Condensable Particulate Matter Emissions from Stationary Sources, Environmental Protection Agency, Mailcode 2822T, 1200 Pennsylvania Ave., NW., Washington, DC 20460. Please include a total of two copies.
- *Hand Delivery:* EPA Docket Center EPA Headquarter Library, Room 3334, EPA West Building, 1301 Constitution Ave., NW., Washington, DC, 20460. Such deliveries are accepted only during the Docket's normal hours of operation, and special arrangements should be made for deliveries of boxed information.

Instructions: Direct your comments to Docket ID No. EPA–HQ–OAR–2008–0348. EPA's policy is that all comments received will be included in the public docket without change and may be made available online at *http://www.regulations.gov,* including any personal information provided, unless the comment includes information claimed to be Confidential Business Information (CBI) or other information whose disclosure is restricted by statute. Do not submit information that you consider to be CBI or otherwise protected through *http://www.regulations.gov* or e-mail. The *http://www.regulation.gov* Web site is an ''anonymous access'' system, which means EPA will not know your identity or contact information unless you provide it in the body of your comment. If you send an e-mail comment directly to EPA without going through *http://www.regulations.gov,* your e-mail address will be automatically captured and included as part of the comment that is placed in the public docket and made available on the Internet. If you submit an electronic comment, EPA recommends that you include your name and other contact information in the body of your comment and with any disk or CD–ROM you submit. If EPA cannot read your comment due to technical difficulties and cannot contact you for clarification, EPA may not be able to consider your comment. Electronic files should avoid the use of special characters, any form of encryption, and be free of any defects or viruses. For additional information about EPA's public docket, visit the EPA Docket Center homepage at *http://www.epa.gov/epahome/dockets.htm.*

Docket: All documents in the docket are listed in the *http://www.regulations.gov* index. Although listed in the index, some information is not publicly available, *e.g.* , CBI or other information whose disclosure is restricted by statute. Certain other material, such as copyrighted material, will be publicly available only in hard copy. Publicly available docket materials are available either electronically in *http://www.regulations.gov* or in hard copy at the Methods for Measurement of Filterable PM_{10} and $PM_{2.5}$ and Measurement of Condensable Particulate Matter Emissions from Stationary Sources Docket, EPA/DC, EPA West Building, Room 3334, 1301 Constitution Ave., NW., Washington, DC. The Public Reading Room/Docket Center is open from 8:30 a.m. to 4:30 p.m., Monday through Friday, excluding legal holidays. The telephone number for the Public Reading Room is (202) 566–1744, and the telephone number for the Air Docket Center is (202) 566–1742.

Public Hearing: If anyone contacts EPA requesting to speak at a public hearing concerning our proposal to revise the PM test methods by April 14, 2009, we will hold a public hearing on or about April 24, 2009. Persons interested in presenting oral testimony should contact Ms. Kristal Mozingo, Measurement Policy Group (D243–05), Sector Policies and Programs Division, EPA, Research Triangle Park, NC 27711, *telephone number:* (919) 541–9767, *e-mail address: mozingo.kristal@epa.gov.* Persons interested in attending the public hearing should also call Ms. Mozingo to verify the time, date, and location of the hearing. A public hearing will provide interested parties the opportunity to present data, views, or arguments concerning the proposed test method revisions.

If a public hearing is held, it will be held at 10 a.m. at the Conference Facilities at EPA's Main Campus, Research Triangle Park, NC, or an alternate site nearby.

FOR FURTHER INFORMATION CONTACT: For general information, contact Ms. Candace Sorrell, U.S. EPA, Office of Air Quality Planning and Standards, Air Quality Assessment Division, Measurement Technology Group (E143–02), Research Triangle Park, NC 27711; telephone number: (919) 541–1064; fax number; (919) 541–0516; *e-mail address: sorrell.candace@epa.gov.* For technical questions, contact Mr. Ron Myers, U.S. EPA, Office of Air Quality Planning and Standards, Sector Policies and Programs Division, Measurement Policy Group (D243–05), Research Triangle Park, NC 27711; *telephone number:* (919) 541–5407; *fax number:* (919) 541–1039; *e-mail address: myers.ron@epa.gov.*

SUPPLEMENTARY INFORMATION:

I. General Information

A. Does This Action Apply to Me?

This action would apply to you if you operate a stationary source that is subject to applicable requirements for total PM or total PM_{10} where EPA Method 202 is incorporated as a component of the applicable compliance method.

In addition, this action would apply to you if Federal, State, or local agencies take certain additional independent actions. For example, this action would apply to sources through actions by State and local agencies which implement CPM control measures to attain the $PM_{2.5}$ NAAQS and specify the use of this test method to demonstrate compliance with the control measure. Actions that State and local agencies would have to implement include: (1) Adopting this method in rules or permits (either by incorporation by reference or by duplicating the method in its entirety), and (2) promulgating an emissions limit requiring the use of this method (or an incorporated method based upon this method). This action would also apply to stationary sources that are required to meet new applicable CPM requirements established through Federal or State permits or rules, such as New Source Performance Standards and New Source Review, which specify the use of this test method to demonstrate compliance with the control measure.

The source categories and entities potentially affected include, but are not limited to, the following:

Category	SIC [1] code	NAICS [2] code	Examples of potentially regulated entities
Industry	3569	332410	Fossil fuel steam generators.
	3569	332410	Industrial, commercial, institutional steam generating units.
	3569	332410	Electricity generating units.
	2911	324110	Petroleum refineries.
	4953	562213	Municipal waste combustors.
	2621	322110	Pulp and paper mills.
	2819	325188	Sulfuric acid plants.
	3241	327310	Portland Cement Plants.
	3274	327410	Lime Manufacturing Plants.
	1222	211111	Coal Preparation Plants.
	1231	212111	
		212112	
		212113	
	3334	331312	Primary and Secondary Aluminum Plants.
	3341	331314	
	3312	331111	Iron and Steel Plants.
	3325	331513	
	2493	321219	Plywood and Reconstituted Products Plants.
	2435	321211	
	2436	321212	

[1] Standard Industrial Classification.
[2] North American Industrial Classification System.

B. What Should I Consider as I Prepare My Comments for EPA?

Do not submit information containing CBI to EPA through *http://www.regulations.gov* or e-mail. Send or deliver information identified as CBI only to the following address: Roberto Morales, OAQPS Document Control Officer (C404–02), U.S. EPA, Office of Air Quality Planning and Standards, Research Triangle Park, NC 27711, Attention Docket ID No. EPA–HQ–OAR–2008–0348. Clearly mark the part or all of the information that you claim to be CBI. For CBI information on a disk or CD–ROM that you mail to EPA, mark the outside of the disk or CD–ROM as CBI, and then identify electronically within the disk or CD–ROM the specific information that is claimed as CBI. In addition to one complete version of the comment that includes information claimed as CBI, a copy of the comment that does not contain the information claimed as CBI must be submitted for inclusion in the public docket. Information so marked will not be disclosed except in accordance with procedures set forth in 40 CFR part 2.

C. Where Can I Obtain a Copy of This Action and Other Related Information?

In addition to being available in the docket, an electronic copy of today's proposed amendments is also available on the Worldwide Web (*http://www.epa.gov/ttn/*) through the Technology Transfer Network (TTN). Following the Administrator's signature, a copy of the proposed amendment will be posted on the TTN's policy and guidance page for newly proposed or promulgated rules at *http://www.epa.gov/ttn/oarpg.* The TTN provides information and technology exchange in various areas of air pollution control.

D. How Is This Document Organized?

The information in this preamble is organized as follows:

I. General Information
A. Does This Action Apply to Me?
B. What Should I Consider as I Prepare My Comments for EPA?
C. Where Can I Obtain a Copy of This Action and Other Related Information?
D. How Is This Document Organized?
II. Background
A. Why Is EPA Issuing This Proposed Rule?
B. Particulate Matter National Ambient Air Quality Standards
C. Measuring PM Emissions
1. Method 201A
2. Method 202
III. This Action
A. What Are the Proposed Amendments to Method 201A?
B. What Are the Proposed Amendments to Method 202?
C. How Will the Proposed Amendments to Methods 201A and 202 Affect Existing Emission Inventories, Emission Standards, and Permit Programs?
D. Request for Comments
1. Items Associated With Both Test Methods
2. Items Associated With Method 201A
2. Items Associated With Method 202
IV. Statutory and Executive Order Reviews
A. Executive Order 12866: Regulatory Planning and Review
B. Paperwork Reduction Act
C. Regulatory Flexibility Act
D. Unfunded Mandates Reform Act
E. Executive Order 13132: Federalism

F. Executive Order 13175: Consultation and Coordination With Indian Tribal Governments
G. Executive Order 13045: Protection of Children From Environmental Health and Safety Risks
H. Executive Order 13211: Actions Concerning Regulations That Significantly Affect Energy Supply, Distribution, or Use
I. National Technology Transfer and Advancement Act
J. Executive Order 12898: Federal Actions To Address Environmental Justice in Minority Populations and Low-Income Populations

II. Background

A. Why Is EPA Issuing This Proposed Rule?

On April 25, 2007 (70 FR 20586), we promulgated the Clean Air Fine Particle Implementation Rule regarding the Clean Air Act (CAA) requirements for State and Tribal plans to implement the 1997 $PM_{2.5}$ NAAQS. These rules require that each State having a $PM_{2.5}$ nonattainment area must submit, by April 5, 2008, an attainment demonstration and adopt regulations to ensure the area will attain the standards as expeditiously as practicable, but even those areas for which the Administrator determines an extension from the 2010 attainment date is appropriate may not receive an extension later than a 2015 attainment date. The emissions inventories and analyses used in the attainment demonstrations must consider filterable and condensable fractions of $PM_{2.5}$ emissions from stationary sources that are significant contributors of direct $PM_{2.5}$ emissions. Direct $PM_{2.5}$ emissions means the solid particles or liquid droplets emitted directly from an air emissions source or activity, or the gaseous emissions or liquid droplets from an air emissions source or activity that condense to form PM or liquid droplets at ambient temperatures.

The preamble to the April 25, 2007, rule acknowledged that there remain questions whether the available test methods provide the most accurate representation of primary PM emissions even though some States have established emissions limits for CPM. As a result, the final rule established a transitional period for developing emissions limits and regulations for condensable $PM_{2.5}$. During this transitional period, EPA has committed to devote resources to assessing and improving the available test methods for CPM.

In response to this commitment and to address the need for improved measurement of fine PM, EPA is proposing amendments to the following test methods in 40 CFR Part 51, Appendix M (Recommended Test Methods for State Implementation Plans (SIPs)):

- Method 201A—Determination of PM_{10} Emissions (Constant Sampling Rate Procedure), and
- Method 202—Determination of Condensable Particulate Emissions from Stationary Sources.

These amendments to Method 201A add a particle-sizing device to allow for sampling of $PM_{2.5}$, PM_{10}, or both PM_{10} and $PM_{2.5}$. With regard to Method 202, we are aware that the method and the various hardware and analytic options described therein are sometimes applied inappropriately, which can lead to inaccurate and imprecise CPM measurements. We are also aware that Method 202 can produce inaccurate CPM measurements when sampling certain types of emissions sources, due to formation of reaction artifacts. The amendments to Method 202 revise the sample collection and recovery procedures of the method to provide for more accurate and precise measurement of CPM.

B. Particulate Matter National Ambient Air Quality Standards

Section 108 and 109 of the CAA govern the establishment and revision of the NAAQS. Section 108 (42 U.S.C. 7408) directs the Administrator to identify and list ''air pollutants'' that ''in his judgment, may reasonably be anticipated to endanger public health and welfare'' and whose ''presence * * * in the ambient air results from numerous or diverse mobile or stationary sources'' and to issue air quality criteria for those that are listed. Air quality criteria are intended to ''accurately reflect the latest scientific knowledge useful in indicating the kind and extent of identifiable effects on public health or welfare which may be expected from the presence of [a] pollutant in ambient air* * *.'' Section 109 (42 U.S.C. 7409) directs the Administrator to propose and promulgate primary and secondary NAAQS for pollutants listed under section 108 to protect public health and welfare, respectively. Section 109 also requires review of the NAAQS at 5-year intervals and that an independent scientific review committee ''shall complete a review of the criteria * * * and the national primary and secondary ambient air quality standards * * * and shall recommend to the Administrator any new * * * standards and revisions of existing criteria and standards as may be appropriate * * *.'' Since the early 1980s, this independent review function has been performed by the Clean Air Scientific Advisory Committee (CASAC).

Initially EPA established the NAAQS for PM on April 30, 1971 (36 FR 8186) based on the original criteria document (Department of Health, Education, and Welfare, 1969). The reference method specified for determining attainment of the original standards was the high-volume sampler, which collects PM up to a nominal size of 25 to 45 μm (referred to as total suspended particulates or TSP). On October 2, 1979 (44 FR 56730), EPA announced the first periodic review of the air quality criteria and NAAQS for PM, and significant revisions to the original standards were promulgated on July 1, 1987 (52 FR 24634). In that decision, EPA changed the indicator for particles from TSP to PM_{10}. When that rule was challenged, the court upheld revised standards in all respects. *Natural Resources Defense Council* v. *Administrator,* 902 F. 2d 962 (D.C. Cir. 1990, *cert. denied*, 498 U.S. 1082 (1991)).

In April 1994, EPA announced its plans for the second periodic review of the air quality criteria and NAAQS for PM, and the Agency promulgated significant revisions to the NAAQS on July 18, 1997 (62 FR 38652). In that decision, EPA revised the PM NAAQS in several respects. While EPA determined that the PM NAAQS should continue to focus on particles less than or equal to 10 μm in diameter (PM_{10}), EPA also determined that the fine and coarse fractions of PM_{10} should be considered separately. The EPA added new standards, using $PM_{2.5}$ as the indicator for fine particles (with $PM_{2.5}$ referring to particles with a nominal mean aerodynamic diameter less than or equal to 2.5 μm), and using PM_{10} as the indicator for purposes of regulating the coarse fraction of PM_{10}.

Following promulgation of the 1997 PM NAAQS, petitions for review were filed by a large number of parties, addressing a broad range of issues. In May 1999, a three-judge panel of the U.S. Court of Appeals for the District of Columbia Circuit issued an initial decision that upheld EPA's decision to establish fine particle standards. *American Trucking Associations* v. *EPA*, 175 F.3d 1027, 1055 (D.C. Cir. 1999), reversed in part on other grounds in *Whitman* v. *American Trucking Associations, 531 U.S. 457 (2001).* The Panel also found ''ample support'' for EPA's decision to regulate coarse particle pollution but vacated the 1997 PM_{10} standards, concluding that EPA had not provided a reasonable explanation justifying use of PM_{10} as an indicator for coarse particles. *Id. at 1054–55*. Pursuant to the court's

decision, EPA removed the vacated 1997 PM_{10} standards but retained the pre-existing 1987 PM_{10} standards (65 FR 80776, December 22, 2000).

On October 23, 1997, EPA published its plans for the third periodic review of the air quality criteria and NAAQS for PM (62 FR 55201), including the 1997 $PM_{2.5}$ standards and the 1987 PM_{10} standards. On October 17, 2006, EPA issued its final decisions to revise the primary and secondary NAAQS for PM to provide increased protection of public health and welfare, respectively (71 FR 61144). With regard to the primary and secondary standards for fine particles, EPA revised the level of the 24-hour $PM_{2.5}$ standard to 35 μg per cubic meter (μg/m^3), retained the level of the annual $PM_{2.5}$ annual standard at 15 μg/m^3, and revised the form of the annual $PM_{2.5}$ standard by narrowing the constraints on the optional use of spatial averaging. With regard to the primary and secondary standards for PM_{10}, EPA retained the 24-hour PM_{10} standard (150 μg/m^3) and revoked the annual standard because available evidence generally did not suggest a link between long-term exposure to current ambient levels of coarse particles and health or welfare effects.

C. Measuring PM Emissions

Section 110 of the CAA, as amended (42 U.S.C. 7410), requires that State and local air pollution control agencies develop and submit plans for EPA approval that provide for the attainment, maintenance, and enforcement of the NAAQS in each air quality control region (or portion thereof) within such State. These plans are known as SIPs. 40 CFR part 51 (Requirements for Preparation, Adoption, and Submittal of Implementation Plans) specifies the requirements for SIPs. Appendix A to subpart A of 40 CFR part 51, defines primary PM_{10} and $PM_{2.5}$ as including both the filterable and condensable fractions of PM. Filterable PM consists of those particles that are directly emitted by a source as a solid or liquid at the stack (or similar release conditions) and captured on the filter of a stack test train. Condensable PM is the material that is in vapor phase at stack conditions but which condenses and/or reacts upon cooling and dilution in the ambient air to form solid or liquid PM immediately after discharge from the stack.

Promulgation of the 1987 NAAQS created the need for methods to quantify PM_{10} emissions from stationary sources. In response, EPA developed and promulgated the following test methods:

- Method 201A—Determination of PM_{10} Emissions (Constant Sampling Rate Procedure), and
- Method 202—Determination of Condensable Particulate Emissions from Stationary Sources.

1. Method 201A

On April 17, 1990 (56 FR 65433), EPA promulgated Method 201A in Appendix M of 40 CFR Part 51 to provide a test method for measuring filterable PM_{10} emissions from stationary sources. In EPA Method 201A, a gas sample is extracted at a constant flow rate through an in-stack sizing device which directs particles with aerodynamic diameters less than or equal to 10 μm to a filter. The particulate mass collected on the filter is determined gravimetrically after removal of uncombined water. With the exception of the PM_{10}-sizing device, the current Method 201A sampling train is the same as the sampling train used for EPA Method 17 of Appendix A–3 to 40 CFR Part 60.

Method 201A cannot be used to measure emissions from stacks that have entrained moisture droplets (e.g., from a wet scrubber stack) since these stacks may have water droplets that are larger than the cut size of the PM_{10}-sizing device. The presence of moisture would prevent an accurate measurement of total PM_{10} since any PM_{10} dissolved in larger water droplets would not be collected by the sizing device and would consequently be excluded in determining the total PM_{10} mass. To measure PM_{10} in stacks where water droplets are known to exist, EPA's Technical Information Document (TID) 09 (Methods 201 and 201A in Presence of Water Droplets), recommends use of Method 5 of Appendix A–3 to 40 CFR Part 60 (or a comparable method) and consideration of the total particulate catch as PM_{10} emissions.

Method 201A is also not applicable for stacks with small diameters (*i.e.*, 18 inches or less). The presence of the in-stack nozzle/cyclones and filter assembly in a small duct will cause significant cross-sectional area interference and blockage leading to incorrect flow calculation and particle size separation. Additionally, the type of metal used to construct the Method 201A cyclone may limit the applicability of the method when sampling at high stack temperatures (e.g., stainless steel cyclones are reported to gall and seize at temperatures greater than 260 °C).

2. Method 202

On December 17, 1991 (56 FR 65433), EPA promulgated Method 202 in Appendix M of 40 CFR Part 51 to provide a test method for measuring CPM from stationary sources. Method 202 uses water-filled impingers to cool, condense, and collect materials that are vaporous at stack conditions and become solid or liquid PM at ambient air temperatures. Method 202, as promulgated, contains several optional procedures that were intended to accommodate the various test methods used by State and local regulatory entities at the time Method 202 was being developed.

When conducted consistently and carefully, Method 202 provides acceptable precision for most emission sources, and the method has been used successfully in regulatory programs where the emission limits and compliance demonstrations are established based on a consistent application of Method 202 and its associated options. However, when the same emission source is tested using different combinations of the optional procedures, there may appear to be large variations in the measured CPM emissions. Additionally, during validation of the promulgated method, we determined that sulfur dioxide (SO_2) gas (a typical component of emissions from several types of stationary sources) can be absorbed partially in the impinger solutions and can react chemically to form sulfuric acid. This sulfuric acid ''artifact'' is not related to the primary emission of CPM from the source but may be counted erroneously as CPM when using Method 202. As we have maintained consistently, the artifact formation can be reduced by at least 90 percent if a one-hour nitrogen purge of the impinger water is used to remove SO_2 before it can form sulfuric acid (this is our preferred application of the Method 202 optional procedures). Inappropriate use (or omission) of the preferred or optional procedures in Method 202 can increase the potential for artifact formation.

Considering the potential for variations in measured CPM emissions, we believe that further verification and refinement of Method 202 is appropriate to minimize the potential for artifact formation. We have performed several studies to assess artifact formation when using Method 202. The results of our 1998 laboratory study and field evaluation commissioned to evaluate the impinger approach can be found in ''Laboratory and Field Evaluation of the EPA Method 5 Impinger Catch for Measuring Condensible Matter from Stationary Sources'' at the following Internet address: *http://www.epa.gov/ttn/emc/methods/m202doc1.pdf.* Essentially, the 1998 study verified the need for a nitrogen purge when SO_2 is

present in stack gas and also provided guidance for analyzing the collected samples. In 2005, an EPA contractor conducted a second study (''Laboratory Evaluation of Method 202 to Determine Fate of SO_2 in Impinger Water'') that replicated some of the earlier EPA work and addressed some additional issues. The report of that work is available at the following Internet address: *http://www.epa.gov/ttn/emc/methods/m202doc2.pdf*. This report also verified the need for a nitrogen purge and identified the primary factors that affect artifact formation.

Also in 2005, a private testing contractor presented a possible minor modification to Method 202 at the Air and Waste Management Association (AWMA) specialty conference. The proposed modification, described in their presentation titled ''Optimized Method 202 Sampling Train to Minimize the Biases Associated with Method 202 Measurement of Condensable Particulate Matter Emissions,'' involved the elimination of water from the first impingers. The presentation (which is available at the following Internet address: *http://www.epa.gov/ttn/emc/methods/m202doc3.pdf*) concluded that modification of the promulgated method to use dry impingers resulted in a significant additional reduction in the sulfate artifact.

In 2006, we began to conduct laboratory studies, in collaboration with several stakeholders, to characterize the artifact formation and other uncertainties associated with conducting Method 202 and to identify procedures that would minimize uncertainties when using Method 202. Since August 2006, we have held two workshops in Research Triangle Park, North Carolina. These meetings were held to present and seek comments on our plan for evaluating potential modifications to Method 202 that would reduce artifact formation. Also, these meetings were held to discuss our progress in characterizing the performance of the modified method, issues that require additional investigation, the results of our laboratory studies, and our commitments to extend the investigation through stakeholders external to EPA. We held another meeting with experienced stack testers and vendors of emissions monitoring equipment to discuss hardware issues associated with modifications of the sampling equipment and the glassware for the proposed CPM test method. Summaries of the method evaluations, as well as meeting minutes from our workshops, can be found at the following Internet address: *http://www.epa.gov/ttn/emc/methods/method202.html*.

The laboratory studies that were performed fulfill a commitment in the preamble to the Clean Air Fine Particle Implementation Rule (72 FR 20586, April 25, 2007) to examine the relationship between several critical CPM sampling and analysis parameters and, to the extent necessary, propose revisions to incorporate improvements in the method. While these improvements in the stationary source test method for CPM will provide for more accurate and precise measurement of all PM, the addition of $PM_{2.5}$ as an indicator of health and welfare effects by the 1997 NAAQS revisions generates the need to quantify $PM_{2.5}$ emissions from stationary sources. To respond to this need, we are proposing revisions to incorporate this capability into the test method for filterable PM_{10}.

III. This Action

This action proposes to provide the capability of measuring $PM_{2.5}$ using Method 201A and to provide for more accurate measurement of the filterable and condensable components of fine PM (particles with mean aerodynamic diameters less than or equal to 2.5 m) and coarse PM (particles with mean aerodynamic diameters less than or equal to 10 m) when using Method 202. Method 201A proposed amendments would add a particle-sizing cyclone to the sampling train. Method 202 proposed amendments would reduce the formation of sulfuric acid artifact by at least an additional 90 percent (compared to our recommended procedures for the existing Method 202), provide for greater consistency between testing contractors in method application, improve the precision of the method, and provide for more accurate quantification of direct (i.e., primary) PM emissions to the ambient air (the method will not measure secondarily-formed PM). The proposed amendments would also affect the measurement of total PM, PM_{10}, and $PM_{2.5}$. Additionally, we are proposing to revise the format of Methods 201A and 202 to be consistent with the format developed by EPA's Environmental Monitoring Management Council (EMMC). A guidance document describing the EMMC format can be found at the following Internet address: *http://www.epa.gov/ttn/emc/guidlnd/gd-045.pdf*.

A. What Are the Proposed Amendments to Method 201A?

On July 18, 1997 (62 FR 38652), we revised the NAAQS for PM to add new standards for fine particles, using $PM_{2.5}$ as the indicator. This action will modify the current Method 201A sampling train configuration to allow for measurement of filterable PM_{10}, filterable $PM_{2.5}$, or both filterable PM_{10} and filterable $PM_{2.5}$ from stationary sources. These amendments combine the existing method with the $PM_{2.5}$ cyclone to create a sampling train that includes a total of two cyclones (one cyclone to size particles with aerodynamic diameters greater than 10 m and one cyclone to size particles with aerodynamic diameters greater than 2.5 m) and a final filter to collect particles with aerodynamic diameters less than or equal to 2.5 m. The $PM_{2.5}$ cyclone would be inserted between the PM_{10} cyclone and the filter of the Method 201A sampling train.

We are not proposing any amendments to address the use of this method when the stack gas has entrained moisture or when the method is used for stack gases with high temperatures. In July 1979, we published a research document (EPA–600/7–79–166) to report the preliminary development of a method for measuring and characterizing the particles in the vent stream from a wet scrubber used to control sulfur oxide emissions. The method was based on the use of a heated, electrified wire placed in the vent stream. When a water droplet impacted the wire, the electric current flowing through the wire was attenuated in proportion to the size of the water droplet. We decided it was not appropriate to promulgate the preliminary method and, at this time, we are not aware of any commercially-available equipment that can determine the aerodynamic size of PM contained in, or dissolved in, liquid water droplets as they would exist in the ambient air following release and evaporation in the ambient air. While we are aware of several optical aerosol droplet spectrometers for measuring the size distribution of liquid droplets in exhaust gases, we are not aware of any commercial instruments that can measure size distributions of particles emitted from stationary sources. We also lack knowledge on the relative effects of solids concentration in the liquid droplets and the possible presence of dry particles in addition to the liquid droplets. Consequently, we recommend the use of EPA Method 5 (40 CFR Part 60, Appendix A–3—Determination of Particulate Matter Emissions from Stationary Sources) when measuring PM in stacks with saturated water vapors containing entrained water droplets. With this application of EPA Method 5,

all of the collected material would be considered $PM_{2.5}$.

B. What Are the Proposed Amendments to Method 202?

This action proposes amendments incorporating modifications that would reduce the formation of artifacts at both low and high concentrations of SO_2 in the sample gas stream. The modifications were developed based on the method evaluations discussed in Section II.C.2 of this preamble.

Method 202, as promulgated in 1991, is a set of sampling procedures for collecting PM in water-filled impingers and a set of sample recovery procedures that are performed on the water following its collection. The water-filled impingers are nearly identical to the four chilled impingers used in standard stationary source sampling trains for PM (e.g., Method 5 and Method 17 of Appendix A–3 and A–6, 40 CFR Part 60). In principle, CPM is collected in the impinger portion of a Method 17-type sampling train. Our preferred operation of the promulgated method requires that the impinger contents be purged with nitrogen after the test run to remove dissolved SO_2 gas from the impinger contents. The impinger solution is then extracted with methylene chloride to separate the organic CPM from the inorganic CPM. The organic and aqueous fractions are then dried and the residues weighed. The sum of both fractions represents the total CPM.

These proposed amendments to Method 202 sampling train and sample recovery procedures would achieve at least an additional 90 percent reduction in sulfuric acid artifact formation compared to the current Method 202 using the nitrogen purge option, provide testing contractors with a more standardized application of the method, improve the precision of the method, and quantify more accurately direct PM emission to the ambient air.

The proposed changes to the sampling train of this method include:

- Installing a condenser between the filter in the front-half of the sample train and the first impinger to cool the sample gases to ambient temperature (less than 30 °C);
- Installing a recirculation pump in the ambient water bath to supply cooling water to the condenser;
- Changing the first two impingers from wet to dry, and placing these two dry impingers in a water bath at ambient temperature (less than 30 °C) (the first dry impinger will use a short-stem insert, and the second dry impinger will use a long-stem insert);
- Requiring the use of an out-of-stack, low-temperature filter (*i.e.*, the CPM filter), as described in EPA Method 8, between the second and third impingers (a Teflon filter is used in place of the fiberglass filter described in EPA Method 8); and
- Requiring that the temperature of the sample gas drawn through the CPM filter be maintained at ambient temperature (less than 30 °C).

It should be noted that under Method 202, the use of a CPM filter is an optional procedure that is used typically if the collection efficiency of the impinger is suspected to be low. These proposed amendments would make the use of a CPM filter a required procedure.

The proposed changes to Method 202 include:

- Extracting the CPM filter with water and organic solvent;
- Evaporating the liquid collected in the impingers in an oven or on a hot plate down to a minimum volume of 10 milliliters, instead of all the way to dryness;
- Evaporating the remaining liquid to dryness at ambient temperature prior to neutralization with ammonium hydroxide;
- Titrating the reconstituted residue with 0.1 normal ammonium hydroxide and a pH meter;
- Evaporating the neutralized liquid to a minimum volume of 10 milliliters in an oven or hot plate;
- Evaporating the final volume to dryness at ambient temperature; and
- Weighing the CPM sample residue to constant weight after allowing a minimum of 24 hours for equilibration in a desiccator.

Note that the requirements to evaporate liquids at ambient temperature and to titrate the reconstituted liquid exist already as options under this method. These optional steps are typically performed to retain CPM that might be lost at higher evaporation temperatures. Under these proposed amendments, these options would be required procedures.

C. How Will the Proposed Amendments to Methods 201A and 202 Affect Existing Emission Inventories, Emission Standards, and Permit Programs?

We anticipate that, over time, the changes in the test methods proposed in this action will result in, among other positive outcomes, more accurate emissions inventories of direct PM emissions and emissions standards that are more indicative of the actual impact of the source on the ambient air quality.

Accurate emission inventories are critical for regulatory agencies to develop the control strategies and demonstrations necessary to attain air quality standards. If implemented, the proposed test method revisions would have the potential to improve our understanding of PM emissions due to the increased availability of more accurate emission tests and, eventually, through the incorporation of less biased test data into existing emissions factors. For CPM, the use of the proposed method would likely reveal a reduced level of CPM emissions from a source compared to the emissions that would have been measured using Method 202, as typically performed. However, there may be some cases where the proposed test method would reveal an increased level of CPM emissions from a source, depending on the relative emissions of filterable and CPM emissions from the source. For example, the existing Method 202 allows complete evaporation of the water containing inorganic PM at 105 °C (221 °F), where the proposed revision requires the last 10 ml of the water to be evaporated at room temperature (not to exceed 30 °C (85 °F)) thereby retaining the CPM that would evaporate at the increased temperature.

Prior to our adoption of the 1997 $PM_{2.5}$ NAAQS, several State and local air pollution control agencies had developed emission inventories that included CPM. Additionally, some agencies established enforceable CPM emissions limits or otherwise required that PM emissions testing include measurement of CPM. While this approach was viable in cases where the same test method was used to develop the CPM regulatory limits and to demonstrate facility compliance, there are substantial inconsistencies within and between States regarding the completeness and accuracy of CPM emission inventories and the test methods used to measure CPM emissions and to demonstrate facility compliance.

These amendments would serve to mitigate the potential difficulties that can arise when we and other regulatory entities attempt to use the test data from State and local agencies whose CPM test methods are inconsistent to develop emission factors, determine program applicability, or to establish emissions limits for CPM emission sources within a particular jurisdiction. For example, problems can arise when the test method used to develop a CPM emission limit is not the same as the test method specified in the rule for demonstrating compliance because the different test methods may quantify different components of PM (e.g., filterable versus condensable). Also, when emissions from State inventories are modeled to assess compliance with

the NAAQS, the determination of direct PM emissions may be biased high or low, depending on the test methods used to estimate PM emissions, and the atmospheric conversion of SO_2 to sulfates (or SO_3) may be inaccurate or double-counted. Additionally, some State and local regulatory authorities have assumed that EPA Method 5 of Appendix A–3 to 40 CFR Part 60 (Determination of Particulate Matter Emissions from Stationary Sources) provides a reasonable estimate of PM_{10} emissions. This assumption is incorrect because Method 5 does not provide particle sizing of the filterable component and does not quantify particulate caught in the impinger portion of the sampling train. Similar assumptions for measurements of $PM_{2.5}$ will result in greater inaccuracies.

With regard to State permitting programs, we recognize that, in some cases, existing Best Available Control Technology (BACT), Lowest Achievable Emission Rate (LAER), or Reasonably Available Control Technology (RACT) limits have been based on an identified control technology, and that the data used to determine the performance of that technology and establish the limits may have focused on filterable PM and thus did not completely characterize PM emissions to the ambient air. While the source test methods used by State programs that developed the applicable permit limit may not have fully characterized the PM emissions, we have no information that would indicate that the test methods are inappropriate indicators of the control technologies' performance for the portion of PM emissions that was addressed by the applicable requirement. As promulgated in the Clean Air Fine Particle Implementation Rule, after January 1, 2011, States are required to consider inclusion of CPM emissions in new or revised emissions limits which they establish. We will defer to the individual State's judgment as to whether, and at what time, it is appropriate to revise existing facility emission limits or operating permits to incorporate information from the revised CPM test method when it is promulgated.

With regard to operating permits, the Title V permit program does not generally impose new substantive air quality control requirements. In general, once emissions limits are established as CAA requirements under the SIP or a SIP-approved pre-construction review permit, they are included in the Title V permits. Obviously, Title V permits may have to be updated to reflect any revision of existing emission limits or new emission limits created in the context of the underlying applicable requirements. Also, if a permit contains the previously promulgated test methods, it is not a given that the permit would always have to be revised should these test methods changes be finalized (*e.g.*, where test methods are incorporated into existing permits through incorporation by reference, no permit terms or conditions would necessarily have to change to reflect changes to those test methods). In any event, the need for action in the permitting context due to these proposed changes to the test methods would be controlled by several factors, such as the exact wording of the existing operating permit, the requirements of the EPA-approved SIP, and any changes that may be made to pre-construction review permits with respect to a particular source test method that did not include CPM or on a set of procedures in Method 202 which underestimated emissions.

In recognition of these issues, the Clean Air Fine Particle Implementation Rule contains provisions establishing a transition period for developing emission limits for condensable direct $PM_{2.5}$ that are needed to demonstrate attainment of the $PM_{2.5}$ NAAQS. As discussed in the April 25, 2007, Clean Air Fine Particle Implementation Rule (72 FR 20586) and in the May 16, 2008, promulgation of the New Source Review Program Implementation for fine particulate matter (73 FR 28321), the transition period, which ends January 1, 2011, allows time to resolve and adopt appropriate testing procedures for CPM emissions and to collect total primary (filterable and condensable) $PM_{2.5}$ emissions data that are more representative of the emissions of each source in their areas. In the $PM_{2.5}$ NSR Implementation Rule, we stated that as part of this test methods rulemaking, we would ''take comment on an earlier closing date for the transition period in the NSR program if we are on track to meet our expectation to complete the test method rule much earlier than January 1, 2011.'' See 73 FR at 28344. Accordingly, we are hereby soliciting comments on ending the NSR transition period for CPM on a date 60 to 90 days after the promulgation date of this test methods rulemaking.

During the transition period, we are available to provide technical support to States, as requested, in establishing emissions testing requirements. We will also solicit the involvement of interested stakeholders to collect new direct filterable and CPM emissions data using methodologies that provide more representative data of a source's direct $PM_{2.5}$ emissions. These data will be used by us, States, and others to improve emissions factors and to help establish or revise source emissions limits in implementation plans. The transition period will also provide time for additional method evaluations. During the transition period, we expect that some States will continue to develop more complete inventories of direct $PM_{2.5}$ emissions, particularly for CPM. As needed to demonstrate attainment of the PM NAAQS, we also expect States to address the control of direct $PM_{2.5}$ emissions, including CPM, with any new actions taken after January 1, 2011 and to address CPM emissions in any direct $PM_{2.5}$ regulations or limits developed under any new PM NAAQS.

As with other methods, any new procedures approved by us will produce data that will be incorporated into the tools (*e.g.*, emission factors, emission inventories, air quality modeling) used to assess the attainment of air quality standards. However, we do not believe that it is necessary to update continually the assessment tools or revise previous air quality analyses until evidence is presented that a mid-course corrective action is needed to achieve the air quality standards (a mid-course review is required by April 2011 for each area with an approved attainment date in 2014 or 2015). At that time, updated inventories and air quality models may be needed to identify and characterize the emission sources that are impeding adequate progress towards attaining the air quality standards. Additionally, the new test data could be used to improve the applicability and performance evaluations of various control technologies.

D. Request for Comments

We encourage stakeholders to continue to participate in the process to refine Methods 201A and 202. We are requesting public comments on all aspects of the proposed test methods. EPA has already engaged several stakeholder groups as described in Section II.C of this preamble. Stakeholders and other members of the public who have not yet participated are encouraged to submit comments. EPA is soliciting as many constructive comments as possible in order to make the most appropriate changes to the methods.

We are specifically interested in recommended alternatives to replace what we have proposed. When submitting comments on alternative approaches, please submit supporting information to substantiate the improvements that are achieved with your recommendation. For

recommended changes to the procedures, include supporting technical data and any associated cost information. For example, if you are proposing an alternative procedure, include data or information that would demonstrate how the alternative procedure would equal or improve the bias and precision of the proposed methods. In addition, provide data or cost information that would show the cost implications to testing companies and analytical laboratories of implementing the alternative procedure. Although our request for comments is not limited to these items, the following are examples of items for which we are specifically requesting comment.

1. Items Associated With Both Test Methods

The proposed test methods are based upon EPA's assessment of comments made on the Clean Air Fine Particle Implementation Rule (April 25, 2007, 70 FR 20586). Commenters expressed that there is an overarching need for test methods that are unbiased with respect to primary particulate matter emissions to the atmosphere and that the test methods must provide a high degree of consistency (precision) in these measurements. As a result, we reduced the numerous options and alternative procedures in the existing methods to a single set of prescriptive procedures that already existed within the methods. In addition, we made a few minor changes to reduce further the bias caused by sulfate artifacts. We are requesting comments on the specific set of procedures we have proposed and any replacement procedures that would be less demanding but that would achieve or improve bias and precision. We are also requesting comments on our decision to eliminate options or alternatives within the existing methods that may not achieve comparable results. If we were to consider alternative procedures that may not achieve comparable results, then what level of difference would be acceptable?

2. Items Associated With Method 201A

Regarding this proposed method, stakeholders have commented on the sample duration that would be required to collect a weighable mass. EPA is requesting comments on alternative methodologies or hardware that would reduce the sample duration in order to reach a reasonable detection limit or to demonstrate that emissions are below the regulatory limit. Commenters should provide information or data, including cost information, which supports their recommendation.

Stakeholders have expressed concern about the configuration and size of the proposed sampling train. Specifically, commenters have expressed concern that the size and length of the combined PM_{10} cyclone and the $PM_{2.5}$ cyclone and filter require larger port opening(s) and a very large stack cross section to minimize blockage. In addition, stakeholders have stated that it is difficult to maintain stack temperature in the sampling train. Therefore, EPA requests comments on alternatives to the proposed procedures or hardware. EPA requests comments on alternative procedures or configurations that would reduce the blockage. EPA also requests comments on alternative configurations that would allow testers to maintain stack temperature in the sampling train, thus reducing or eliminating condensation in the primary or filterable particulate portions of the method. Recommendations to revise the sampling train size or configuration should include an assessment of the impacts of the recommended revisions on the sample size, required sample duration, and ability to collect a representative sample. Commenters should provide information or data, including cost information that supports their recommendation.

3. Items Associated With Method 202

Stakeholders originally expressed concern about the formation of artifacts in Method 202 when sulfur dioxide was present in the stack gas. Based on laboratory experiments, the proposed revision to Method 202 eliminates at least an additional 90 percent of the artifact over the best practices procedures of the existing Method 202. In addition, the laboratory experiments show that the proposed revision to Method 202 reduces artifact at or below the detection limits of the method. EPA requests comments on any further concerns with the formation of artifacts in the proposed method.

Stakeholders have expressed concern about glassware cleaning. Specifically, stakeholders have questioned the requirement to bake glassware at 300 °C for 6 hours prior to use in order to reduce the background level of CPM. Stakeholders have stated that many stack testing firms and some analytical laboratories may not have ovens that can achieve this temperature. EPA requests information on the performance of a lower temperature oven in effectively reducing the blank level of CPM.

Another stakeholder concern is whether glassware needs to be completely cleaned between sampling runs. The proposed method requires clean glassware at the start of each new source category test. EPA requests comments on alternatives that would minimize the cost of glassware preparation and reduce bias due to carryover from tests at the same source category and between source categories. Commenters should submit data or information to demonstrate that their alternative procedure would reduce or minimize the carryover or blank and would minimize the cost to prepare glassware.

Stakeholders expressed concern about the need for Method 202 following filtration at less than 30 °C (85 °F). EPA requests comments on how to clarify when Method 202 is or is not required.

Stakeholders have expressed concern about the appropriate type of CPM filter required by the proposed method. EPA requests comments on the construction material and porosity of the filter. Commenters should address the capture efficiency required by the method (i.e., the filter must have an efficiency of at least 99.95 percent (<0.05 percent penetration) on 0.3 micron particles). Commenters should include how their alternative would minimize the blank contribution from the filters.

Commenters have expressed concern about the additional analytical steps required to process the CPM filter. The proposed method requires extraction and combination of the filter extract with the appropriate impinger samples to accurately collect and measure sulfuric acid and other condensable material. Commenters should address alternative procedures for CPM filter analysis that would generate precise and unbiased analysis of CPM collected on the CPM filter.

Stakeholders have expressed concern about maintaining the stack gas flow through the Teflon® membrane filter. Stakeholders have commented on their need to use a supplementary support filter to maintain flow through the sample filter. EPA requests comments regarding the use of a support filter that would help maintain stack gas flow while minimizing or eliminating the support filter's contribution to the sample mass. EPA requests comments on the use of this alternative and its potential impact on bias and precision, as well as its potential impact on cost.

IV. Statutory and Executive Order Reviews

A. Executive Order 12866: Regulatory Planning and Review

Under Executive Order (EO) 12866 (58 FR 51735, October 4, 1993), this proposed action is a ''significant regulatory action'' since it raises novel

legal or policy issues arising out of legal mandates, the President's priorities, or the principles set forth in this Executive Order. Accordingly, EPA submitted this proposed action to the Office of Management and Budget (OMB) for review under Executive Order 12866 and any changes made in response to OMB recommendations have been documented in the docket for this action.

B. Paperwork Reduction Act

This proposed action does not impose an information collection burden under the provisions of the *Paperwork Reduction Act,* 44 U.S.C. 3501 *et seq.* Burden is defined at 5 CFR 1320.3(b). The proposed amendments do not contain any reporting or recordkeeping requirements. The proposed amendments revise two existing source test methods to allow one method to perform additional particle sizing at 2.5 micrometers and to improve the precision and accuracy of the other test method.

C. Regulatory Flexibility Act

The Regulatory Flexibility Act (RFA) generally requires an agency to prepare a regulatory flexibility analysis of any rule subject to notice and comment rulemaking requirements under the Administrative Procedure Act or any other statute unless the agency certifies that the rule will not have a significant economic impact on a substantial number of small entities. Small entities include small businesses, small organizations, and small governmental jurisdictions.

For purposes of assessing the impacts of this rule on small entities, small entity is defined as: (1) A small business as defined by the Small Business Administration's (SBA) regulations at 13 CFR 121.201; (2) a small governmental jurisdiction that is a government of a city, county, town, school district or special district with a population of less than 50,000; and (3) a small organization that is any not-for-profit enterprise which is independently owned and operated and is not dominant in its field.

After considering the economic impacts of this proposed rule on small entities, I certify that this action will not have a significant economic impact on a substantial number of small entities. We do not anticipate that the proposed changes to Methods 201A and 202 will result in a significant economic impact on small entities. Most of the emission sources that will be required by State regulatory agencies (and Federal regulators after 2011) to conduct tests using the revised methods are those that have PM emissions of 100 tons per year or more. EPA expects that few, if any, of these emission sources will be small entities.

Although this proposed rule will not have a significant economic impact on a substantial number of small entities, EPA nonetheless has tried to reduce the impact of this rule on small entities. In this preamble, we explained that this rule does not require any entities to use these proposed test methods. Such a requirement would be mandated by a separate independent regulatory action. We indicated that upon promulgation of this rule, some entities may be required to use these test methods as a result of existing permits or regulations. Since the cost to use the proposed test methods is comparable to the cost of the methods they replace, little or no significant economic impact to small entities will accompany the increased precision and accuracy of the revised test methods which are proposed. We also indicated that after January 1, 2011, when the transition period established in the Clean Air Fine Particle Implementation Rule expires, States are required to consider inclusion of pollutants measured by these test methods in new or revised regulations. The economic impacts caused by any new or revised State regulations for fine PM would be associated with those State rules and not with this proposal to modify the existing test methods. Consequently, we believe that this rule imposes little if any adverse economic impact to small entities. However, we continue to be interested in the potential impacts of the proposed rule on small entities and welcome comments on issues related to such impacts.

D. Unfunded Mandates Reform Act

This rule does not contain a Federal mandate that may result in expenditures of $100 million or more for State, local, and tribal governments, in the aggregate, or the private sector in any one year. The incremental costs associated with conducting the revised test methods (expected to be less than $1,000 per test) do not impose a significant burden on sources. Thus, this rule is not subject to the requirements of sections 202 and 205 of the UMRA.

This rule is also not subject to the requirements of section 203 of UMRA because it contains no regulatory requirements that might significantly or uniquely affect small governments. The low incremental cost associated with the revised test methods mitigates any significant or unique effects on small governments.

E. Executive Order 13132: Federalism

Executive Order 13132, entitled ''Federalism'' (64 FR 43255, August 10, 1999), requires EPA to develop an accountable process to ensure ''meaningful and timely input by State and local officials in the development of regulatory policies that have federalism implications.'' ''Policies that have federalism implications'' is defined in the Executive Order to include regulations that have ''substantial direct effects on the States, on the relationship between the national government and the States, or on the distribution of power and responsibilities among the various levels of government.''

This proposed rule does not have federalism implications. It will not have substantial direct effects on the States, on the relationship between the national government and the States, or on the distribution of power and responsibilities among the various levels of government, as specified in Executive Order 13132. In cases where a source of $PM_{2.5}$ emissions is owned by a State or local government, those governments may incur a minimal compliance costs associated with conducting tests to quantify $PM_{2.5}$ emissions using the revised methods when they are promulgated. However, such tests would be conducted at the discretion of the State or local government and the compliance costs are not expected to impose a significant burden on those governments. Thus, Executive Order 13132 does not apply to this rule.

In the spirit of Executive Order 13132, and consistent with EPA policy to promote communications between EPA and State and local governments, EPA specifically solicits comment on this proposed rule from State and local officials.

F. Executive Order 13175: Consultation and Coordination With Indian Tribal Governments

This action does not have tribal implications, as specified in Executive Order 13175 (65 FR 67249, November 9, 2000). In cases where a source of $PM_{2.5}$ emissions is owned by a tribal government, those governments may incur minimal compliance costs associated with conducting tests to quantify $PM_{2.5}$ emissions using the revised methods when they are promulgated. However, such tests would be conducted at the discretion of the tribal government and the compliance costs are not expected to impose a significant burden on those governments. Thus, Executive Order 13175 does not apply to this action.

EPA specifically solicits additional comment on this proposed rule from tribal officials.

G. Executive Order 13045: Protection of Children From Environmental Health and Safety Risks

EPA interprets EO 13045 (62 FR 19885, April 23, 1997) as applying only to those regulatory actions that concern health or safety risks, such that the analysis required under section 5–501 of the EO has the potential to influence the regulation. This action is not subject to EO 13045 because it does not establish an environmental standard intended to mitigate health or safety risks.

H. Executive Order 13211: Actions Concerning Regulations That Significantly Affect Energy Supply, Distribution, or Use

This action is not a ''significant energy action'' as defined in Executive Order 13211 (66 FR 28355 (May 22, 2001)), because it is not likely to have a significant adverse effect on the supply, distribution, or use of energy. This rule revises existing EPA test methods and does not affect energy supply, distribution, or use.

I. National Technology Transfer and Advancement Act

Section 12(d) of the National Technology Transfer and Advancement Act of 1995 (''NTTAA''), Public Law 104–113 (15 U.S.C. 272 note) directs EPA to use voluntary consensus standards (VCS) in its regulatory activities unless to do so would be inconsistent with applicable law or otherwise impractical. Voluntary consensus standards are technical standards (*e.g.*, materials specifications, test methods, sampling procedures, and business practices) that are developed or adopted by voluntary consensus standards bodies. NTTAA directs EPA to provide Congress, through OMB, explanations when the Agency decides not to use available and applicable voluntary consensus standards.

The rulemaking involves technical standards. Therefore, the Agency conducted a search to identify potentially applicable voluntary consensus standards. However, we identified no such standards, and none were brought to our attention in comments. Therefore, EPA has decided to amend portions of existing EPA test methods. While no comprehensive source test methods were identified, EPA identified two VCS which were applicable for use within the amended test methods. The first VCS cited in this proposal is American Society for Testing and Materials (ASTM) Method D2986–95a (1999), ''Standard Method for Evaluation of Air, Assay Media by the Monodisperse DOP (Dioctyl Phthalate) Smoke Test,'' for its procedures to conduct filter efficiency tests. The second VCS cited in this proposed rule is ASTM D1193–06, ''Standard Specification for Reagent Water,'' for the proper selection of distilled ultra-filtered water. These VCS are available from the American Society for Testing and Materials, 100 Barr Harbor Drive, Post Office Box C700, West Conshohocken, PA 19428–2959.

EPA welcomes comments on this aspect of the proposed rulemaking and, specifically, invites the public to identify potentially applicable VCS and to explain why such standards should be used in this regulation.

J. Executive Order 12898: Federal Actions To Address Environmental Justice in Minority Populations and Low-Income Populations

Executive Order (EO) 12898 (59 FR 7629, February 16, 1994) establishes federal executive policy on environmental justice. Its main provision directs federal agencies, to the greatest extent practicable and permitted by law, to make environmental justice part of their mission by identifying and addressing, as appropriate, disproportionately high and adverse human health or environmental effects of their programs, policies, and activities on minority populations and low-income populations in the United States.

EPA has determined that this proposed rule will not have disproportionately high and adverse human health or environmental effects on minority or low-income populations because it does not affect the level of protection provided to human health or the environment. The proposed amendments revise existing test methods to improve the accuracies of the measurements which are expected to improve environmental quality and reduce health risks for areas that may be designated as nonattainment.

List of Subjects in 40 CFR Part 51

Administrative practice and procedure, Air pollution control, Carbon monoxide, Incorporation by reference, Intergovernmental relations, Lead, Nitrogen oxide, Ozone, Particulate matter, Reporting and recordkeeping requirements, Sulfur compounds, Volatile organic compounds.

Dated: March 16, 2009.

Lisa P. Jackson,

Administrator.

For the reasons set out in the preamble, title 40, chapter I of the Code of Federal Regulations is proposed to be amended as follows:

PART 51—[AMENDED]

1. The authority citation for part 51 continues to read as follows:

Authority: 23 U.S.C. 101; 42 U.S.C 7401–7671q.

2. Amend Appendix M by revising Methods 201A and 202 to read as follows:

Appendix M to Part 51—Recommended Test Methods for State Implementation Plans

* * * * *

METHOD 201A—DETERMINATION OF PM_{10} AND $PM_{2.5}$ EMISSIONS FROM STATIONARY SOURCES (Constant Sampling Rate Procedure)

1.0 Scope and Applicability

1.1 Scope. The U.S. Environmental Protection Agency (U.S. EPA or ''we'') developed this method to describe the procedures that the stack tester (''you'') must follow to measure particulate matter emissions equal to or less than a nominal aerodynamic diameter of 10 micrometer (PM_{10}) and 2.5 micrometer ($PM_{2.5}$). If the gas filtration temperature exceeds 30 °C (85 °F), this method includes procedures to measure only filterable particulate matter (material that does not pass through a filter or a cyclone/filter combination). If the gas filtration temperature exceeds 30 °C (85 °F), and you must measure total primary (direct) particulate matter emissions to the atmosphere, both the filterable and condensable (material that condenses after passing through a filter) components, then you must combine the procedures in this method with the procedures in Method 202 for measuring condensable particulate matter. However, if the gas filtration temperature never exceeds 30 °C (85 °F), then use of Method 202 is not required to measure total primary particulate matter.

1.2 Applicability. You can use this method to measure filterable particulate matter from stationary sources only. Filterable particulate matter is collected in-stack with this method (i.e., the method measures materials that are solid or liquid at stack conditions).

1.3 Responsibility. You are responsible for obtaining the equipment and supplies you will need to use this method. You must also develop your own procedures for following this method and any additional procedures to ensure accurate sampling and analytical measurements.

1.4 Results. To obtain results, you must have a thorough knowledge of the following test methods that are found in Appendices A–1 through A–3 of 40 CFR Part 60.

(a) Method 1—Sample and Velocity Traverses for Stationary Sources.

(b) Method 2—Determination of Stack Gas Velocity and Volumetric Flow Rate (Type S Pitot Tube).

(c) Method 3—Gas Analysis for the Determination of Dry Molecular Weight.

(d) Method 4—Determination of Moisture Content in Stack Gases.

(e) Method 5—Determination of Particulate Matter Emissions from Stationary Sources.

1.5 Additional Methods. We do not anticipate that you will need additional test methods to measure ambient contributions of particulate matter to source emissions because ambient contributions are insignificant for most of the sources that are expected to be measured using this test method. However, when an adjustment for the ambient air particulate matter is needed, use the ambient air reference methods to quantify the ambient air contribution. If the source gas filtration temperature never exceeds 30 °C (85 °F) and condensable particulate is not measured by Method 202, then the correction for ambient particulate matter must be adjusted for condensable material that vaporizes at the process temperature.

1.6 Limitations. You cannot use this method to measure emissions following a wet scrubber because this method is not applicable for in-stack gases containing water droplets. To measure PM_{10} and $PM_{2.5}$ in emissions where water droplets are known to exist, we recommend that you use Method 5. This method may not be suitable for sources with stack gas temperatures exceeding 260 °C (500 °F). You may need to take extraordinary measures—including the use of specialty metals (*e.g.*, Inconel) to achieve reliable particulate mass since the threads of the cyclones may gall or seize, thus preventing the recovery of the collected particulate matter and rendering the cyclone unusable for subsequent use.

1.7 Conditions. You can use this method to obtain both particle sizing and total filterable particulate if the isokinetics are within 90–110 percent, the number of sampling points is the same as Method 5 or 17, and the in-stack filter temperature is within the acceptable range. The acceptable range for the in-stack filter temperature is generally defined as the typical range of temperature for emission gases. The acceptable range varies depending on the source and control technology. To satisfy Method 5 criteria, you may need to remove the in-stack filter and use an out-of-stack filter and recover the PM in the probe between the $PM_{2.5}$ particle sizer and the filter. In addition, to satisfy Method 5 and Method 17 criteria, you may need to sample from more than 12 traverse points. Be aware that this method determines in-stack PM_{10} and $PM_{2.5}$ filterable emissions by sampling from a recommended maximum of 12 sample points, at a constant flow rate through the train (the constant flow is necessary to maintain the size cuts of the cyclones), and with a filter that is at the stack temperature. In contrast, Method 5 or Method 17 trains are operated isokinetically with varying flow rates through the train. Method 5 and Method 17 require sampling from as many as 24 sample points. Method 5 uses an out-of-stack filter that is maintained at a constant temperature of 120 °C (248 °F). Further, to use this method in place of Method 5 or Method 17, you must extend the sampling time so that you collect the minimum mass necessary for weighing on each portion of this sampling train. Also, if you are using this method as an alternative to a required performance test, then you must receive approval from the appropriate authorities prior to conducting the test.

2.0 Summary of Method

2.1 Summary. To measure PM_{10} and $PM_{2.5}$, extract a sample of gas at a predetermined constant flow rate through an in-stack sizing device. The sizing device separates particles with nominal aerodynamic diameters of 10 microns and 2.5 microns. To minimize variations in the isokinetic sampling conditions, you must establish well-defined limits. Once a sample is obtained, remove uncombined water from the particulate, then use gravimetric analysis to determine the particulate mass for each size fraction. Changes in the original Method 201A of Appendix M to 40 CFR part 51, supplement the filterable particulate procedures with the $PM_{2.5}$ cyclone from a conventional five-stage cascade cyclone train. The addition of a $PM_{2.5}$ cyclone between the PM_{10} cyclone and the stack temperature filter in the sampling train supplements the measurement of PM_{10} with the measurement of fine particulate matter. Without the addition of the $PM_{2.5}$ cyclone, the filterable particulate portion of the sampling train may be used to measure total and PM_{10} emissions. Likewise, with the exclusion of the PM_{10} cyclone, the filterable particulate portion of the sampling train may be used to measure total and $PM_{2.5}$ emissions. Figure 1 of Section 17 presents the schematic of the sampling train configured with these changes.

3.0 Definitions

[Reserved]

4.0 Interferences

You cannot use this method to measure emissions following a wet scrubber because this method is not applicable for in-stack gases containing water droplets. Stacks with entrained moisture droplets may have water droplets larger than the cut sizes for the cyclones. These water droplets normally contain particles and dissolved solids that become PM_{10} and $PM_{2.5}$ following evaporation of the water.

5.0 Safety

Disclaimer: You may have to use hazardous materials, operations, and equipment while using this method. We do not provide information on appropriate safety and health practices. You are responsible for determining the applicability of regulatory limitations and establishing appropriate safety and health practices. Handle materials and equipment properly.

6.0 Equipment and Supplies

Figure 2 of Section 17 shows details of the combined cyclone heads used in this method. The sampling train is the same as Method 17 of Appendix A–6 to Part 60 with the exception of the PM_{10} and $PM_{2.5}$ sizing devices. The following sections describe the sampling train's primary design features in detail.

6.1 Filterable Particulate Sampling Train Components.

6.1.1 Nozzle. You must use stainless steel (316 or equivalent) or Teflon®-coated stainless steel nozzles with a sharp tapered leading edge. We recommend one of the 12 nozzles listed in Figure 3 of Section 17 because they meet design specifications when PM_{10} cyclones are used as part of the sampling train. We also recommend that you have a large number of nozzles in small diameter increments available to increase the likelihood of using a single nozzle for the entire traverse. We recommend one of the nozzles listed in Figure 4A or 4B of Section 17 because they meet design specifications when $PM_{2.5}$ cyclones are used without PM_{10} cyclones as part of the sampling train.

6.1.2 PM_{10} and $PM_{2.5}$ Sizing Device. Use a stainless steel (316 or equivalent) PM_{10} and $PM_{2.5}$ sizing devices. The sizing devices must be cyclones that meet the design specifications shown in Figures 3, 4, 5, and 6 of Section 17. Use a caliper to verify the dimensions of the PM_{10} and $PM_{2.5}$ sizing devices to within ±0.02 cm of the design specifications. Example suppliers of PM_{10} and $PM_{2.5}$ sizing devices include the following:

(a) Environmental Supply Company, Inc., 2142 Geer Street, Durham, North Carolina 27704, (919) 956–9688 (phone), (919) 682–0333 (fax).

(b) Apex Instruments, P.O. Box 727, 125 Quantum Street, Holly Springs, North Carolina 27540, (919) 557–7300 (phone), (919) 557–7110 (fax).

(c) Andersen Instruments Inc., 500 Technology Court, Smyrna, Georgia 30082, (770) 319–9999 (phone), (770) 319–0336 (fax).

You may use alternative particle sizing devices if they meet the requirements in Development and Laboratory Evaluation of a Five-Stage Cyclone System, EPA–600/7–78–008 (incorporated by reference) and are approved by the Administrator. The Director of the Federal Register approves this incorporation by reference in accordance with 5 U.S.C. 552(a) and 1 CFR part 51. You may obtain a copy from National Technical Information Service, *http://www.ntis.gov* or (800) 553–6847. You may inspect a copy at the Office of Federal Register, 800 North Capitol Street, NW., Suite 700, Washington, DC.

6.1.3 Filter Holder. Use a filter holder that is either stainless steel (316 or equivalent) or Teflon®-coated stainless steel. A heated glass filter holder may be substituted for the steel filter holder when filtration is performed out-of-stack. Commercial size filter holders are available depending upon project requirements, including commercial filter holders to support 25-, 47-, and 63-mm diameter filters. Commercial size filter holders contain a Teflon® O-ring, a stainless steel screen that supports the filter, and a final Teflon® O-ring. Screw the assembly together and attach to the outlet of cyclone IV.

6.1.4 Pitot Tube. You must use a pitot tube made of heat resistant tubing. Attach the pitot tube to the probe with stainless steel

fittings. Follow the specifications for the pitot tube and its orientation to the inlet nozzle given in Section 6.1.1.3 of Method 5.

6.1.5 Probe Liner. The probe extension must be glass-lined or Teflon®. Follow the specifications in Section 6.1.1.2 of Method 5.

6.1.6 Differential Pressure Gauge, Condensers, Metering Systems, Barometer, and Gas Density Determination Equipment. Follow the requirements in Sections 6.1.1.4 through 6.1.3 of Method 5, as applicable.

6.2 Sample Recovery Equipment.

6.2.1 Filterable Particulate Recovery. Use the following equipment to quantitatively determine the amount of filterable particulate matter recovered from the sampling train. Follow the requirements specified in Sections 6.2.1 through 6.2.8 of Method 5, respectively.

(a) Filter holder brushes
(b) Wash bottles
(c) Glass sample storage containers
(d) Petri dishes
(e) Graduated cylinders and balance
(f) Plastic storage containers
(g) Funnel
(h) Rubber policeman

7.0 Reagents, Standards, and Sampling Media

7.1 Sample Collection. To collect a sample, you will need a filter and silica gel. You must also have water and crushed ice. Additional information on these items is in the following paragraphs.

7.1.1 Filter. Use a glass fiber, quartz, or Teflon® filter that does not a have an organic binder. The filter must also have an efficiency of at least 99.95 percent (<0.05 percent penetration) on 0.3 micron dioctyl phthalate smoke particles. Conduct the filter efficiency test in accordance with ASTM Method D2986–95a—Standard Method for Evaluation of Air, Assay Media by the Monodisperse DOP (Dioctyl Phthalate) Smoke Test (incorporated by reference). The Director of the Federal Register approves this incorporation by reference in accordance with 5 U.S.C. 552(a) and 1 CFR part 51. You may obtain a copy from American Society for Testing and Materials (ASTM), 100 Barr Harbor Drive, Post Office Box C700, West Conshohocken, PA 19428–2959. You may inspect a copy at the Office of Federal Register, 800 North Capitol Street, NW., Suite 700, Washington, DC. Alternatively, you may use test data from the supplier's quality control program. If the source you are sampling has sulfur dioxide (SO_2) or sulfite (SO_3) emissions, you must use a filter that will not react with SO_2 or SO_3. Depending on your application and project data quality objectives (DQOs), filters are commercially available in 25-, 47-, 83-, and 110-mm sizes.

7.1.2 Silica Gel. Use an indicating-type silica gel of 6 to 16 mesh. We must approve other types of desiccants (equivalent or better) before you use them. Allow the silica gel to dry for 2 hours at 175 °C (350 °F) if it is being reused. You do not have to dry new silica gel.

7.1.3 Crushed ice. Obtain from the best readily available source.

7.2 Sample Recovery and Analysis Reagents. You will need acetone and anhydrous sodium sulfate for the sample analysis. Unless otherwise indicated, all reagents must conform to the specifications established by the Committee on Analytical Reagents of the American Chemical Society. If such specifications are not available, then use the best available grade. Additional information on each of these items is in the following paragraphs.

7.2.1 Acetone. Use acetone that is stored in a glass bottle. Do not use acetone from a metal container because it normally produces a high residue blank. You must use acetone with blank values <1 ppm, by weight residue. Analyze acetone blanks prior to field use to confirm low blank values. In no case shall a blank value of greater than 1E–06 of the weight of acetone used in sample recovery be subtracted from the sample weight (*i.e.*, the maximum blank correction is 0.079 mg per 100 mL of acetone used to recover samples).

7.2.2 Particulate Sample Desiccant. Use indicating-type anhydrous sodium sulfate to desiccate samples prior to weighing.

8.0 Sample collection, Preservation, Storage, and Transport

8.1 Qualifications. This is a complex test method. To obtain reliable results, you must be trained and experienced with in-stack filtration systems (such as cyclones, impactors, and thimbles) and their operations.

8.2 Preparations. Follow the pretest preparation instructions in Section 8.1 of Method 5.

8.3 Site Setup. You must complete the following to properly set up for this test:

(a) Determine the sampling site location and traverse points.
(b) Calculate probe/cyclone blockage.
(c) Verify the absence of cyclonic flow.
(d) Complete a preliminary velocity profile, and select a nozzle.

8.3.1 Sampling Site Location and Traverse Point Determination. Follow the standard procedures in Method 1 to select the appropriate sampling site. Then do all of the following:

(a) Sampling site. Choose a location that maximizes the distance from upstream and downstream flow disturbances.

(b) Traverse points. The recommended maximum number of total traverse points at any location is 12 as shown in Figure 7 of Section 17. Prevent the disturbance and capture of any solids accumulated on the inner wall surfaces by maintaining a 1-inch distance from the stack wall (½ inch for sampling locations less than 24 inches in diameter).

(c) Round or rectangular duct or stack. If a duct or stack is round with two ports located 90 degrees apart, use six sampling points on each diameter. Use a 3 x 4 sampling point layout for rectangular ducts or stacks. Consult with the Administrator to receive approval for other layouts before you use them.

(d) Sampling ports. To accommodate the in-stack cyclones for this method, you may need larger diameter sampling ports than those used by Method 5 or Method 17 for total filterable particulate sampling. When you must use nozzles smaller than 0.16 inch in diameter, the sampling port diameter must be 6 inches. Do not use the conventional 4-inch diameter port because the combined dimension of the PM_{10} cyclone and the nozzle extending from the cyclone exceeds the internal diameter of the port.

[**Note:** If the port nipple is short, you may be able to ''hook'' the sampling head through a smaller port into the duct or stack.]

8.3.2 Probe/Cyclone Blockage Calculations. Follow the procedures in the next two sections, as appropriate.

8.3.2.1 *Ducts with diameters greater than 24 inches.*

Minimize the blockage effects of the combination of the in-stack nozzle/cyclones and filter assembly for ducts with diameters greater than 24 inches by keeping the cross-sectional area of the assembly at 3 percent or less of the cross-sectional area of the duct.

8.3.2.2 *Ducts with diameters between 18 and 24 inches.* Ducts with diameters between 18 and 24 inches have blockage effects ranging from 3 to 6 percent, as illustrated in Figure 8 of Section 17. Therefore, when you conduct tests on these small ducts, you must adjust the observed velocity pressures for the estimated blockage factor whenever the combined sampling apparatus blocks more than 3 percent of the stack or duct (see Sections 8.7.2.2 and 8.7.2.3 on the probe blockage factor and the final adjusted velocity pressure, respectively).

8.3.3 Cyclonic Flow. Do not use the combined cyclone sampling head at sampling locations subject to cyclonic flow. Also, you must follow procedures in Method 1 to determine the presence or absence of cyclonic flow and then perform the following calculations.

(a) As per Section 11.4 of Method 1, find and record the angle that has a null velocity pressure for each traverse point using a S-type pitot tube.

(b) Average the absolute values of the angles that have a null velocity pressure. Do not use the sampling location if the average absolute value exceeds 20°.

[**Note:** You can minimize the effects of cyclonic flow conditions by moving the sampling location, placing gas flow straighteners upstream of the sampling location or applying a modified sampling approach as described in EPA Guideline Document 008. You may need to obtain an alternate method approval prior to using a modified sampling approach.]

8.3.4 Preliminary Velocity Profile. Conduct a preliminary velocity traverse by following Method 2 velocity traverse procedures. The purpose of the preliminary velocity profile is to determine all of the following:

(a) The gas sampling rate for the combined probe/cyclone sampling head in order to meet the required particle size cut.

(b) The appropriate nozzle to maintain the required gas sampling rate for the velocity pressure range and isokinetic range. If the isokinetic range cannot be met (e.g., batch processes, extreme process flow or temperature variation), void the sample or use methods subject to the approval of the Administrator to correct the data.

(c) The necessary sampling duration to obtain sufficient particulate catch weights.

8.3.4.1 *Preliminary traverse.* You must use an S-type pitot tube with a conventional

thermocouple to conduct the traverse. Conduct the preliminary traverse as close as possible to the anticipated testing time on sources that are subject to hour-by-hour gas flow rate variations of approximately ±20 percent and/or gas temperature variations of approximately ±10 °C (±50 °F).

[**Note:** You should be aware that these variations can cause errors in the cyclone cut diameters and the isokinetic sampling velocities.]

8.3.4.2 *Velocity pressure range.* Insert the S-type pitot tube at each traverse point, and record the range of velocity pressures measured on data form in Method 2. You will use this later to select the appropriate nozzle.

8.3.4.3 *Initial gas stream viscosity and molecular weight.* Determine the average gas temperature, average gas oxygen content, average carbon dioxide content, and estimated moisture content. You will use this information to calculate the initial gas stream viscosity (Equation 3) and molecular weight (Equations 1 and 2).

[**Note:** You must follow the instructions outlined in Method 4 to estimate the moisture content. You may use a wet bulb-dry bulb measurement or hand-held hygrometer measurement to estimate the moisture content of sources with gas temperatures less than 71 °C (160 °F).]

8.3.4.4 *Particulate matter concentration in the gas stream.* Determine the particulate matter concentration for the $PM_{2.5}$ and the $PM_{2.5}$ to PM_{10} components of the gas stream through qualitative measurements or estimates. Having an idea of the particulate concentration in the gas stream is not essential but will help you determine the appropriate sampling time to acquire sufficient particulate matter weight for better accuracy at the source emission level. The collectable particulate matter weight requirements depend primarily on the types of filter media and weighing capabilities that are available and needed to characterize the emissions. Estimate the collectable particulate matter concentrations in the >10 micrometer, ≤10 and >2.5 micrometers, and ≤2.5 micrometer size ranges. Typical particulate matter concentrations are listed in Table 1 of Section 17. Additionally, relevant sections of AP–42 may contain particle size distributions for processes characterized in those sections and Appendix B2 of AP–42 contains generalized particle size distributions for nine industrial process categories (*e.g.,* stationary internal combustion engines firing gasoline or diesel fuel, calcining of aggregate or unprocessed ores). The generalized particle size distributions can be used if source-specific particle size distributions are unavailable. Appendix B2 also contains typical collection efficiencies of various particulate control devices and example calculations showing how to estimate uncontrolled total particulate emissions, uncontrolled size-specific emissions, and controlled size-specific particulate emissions.

8.4 Pre-test Calculations. You must perform pre-test calculations to help select the appropriate gas sampling rate through cyclone I (PM_{10}) and cyclone IV ($PM_{2.5}$). Choosing the appropriate sampling rate will allow you to maintain the appropriate particle cut diameters based upon preliminary gas stream measurements, as specified in Table 2 of Section 17.

8.4.1 Gas Sampling Rate. The gas sampling rate is defined by the performance curves for both cyclones, as illustrated in Figure 9 of Section 17. You must use the calculations in Section 8.5 to achieve the appropriate cut size specification for each cyclone. The optimum gas sampling rate is the overlap zone defined as the range below the cyclone IV 2.25 micrometer curve down to the cyclone I 11.0 micrometer curve (area between the two dark, solid lines in Figure 9 of Section 17).

8.4.2 Choosing the Appropriate Sampling Rate. You must select a gas sampling rate in the middle of the overlap zone (discussed in Section 8.4.1), as illustrated in Figure 9 of Section 17 to maximize the acceptable tolerance for slight variations in flow characteristics at the sampling location. The overlap zone is also a weak function of the gas composition.

[**Note:** The acceptable range is limited, especially for gas streams with temperatures less than approximately 100 °F. At lower temperatures, it may be necessary to perform the PM_{10} and $PM_{2.5}$ separately in order to meet the necessary particle size criteria shown in Table 2 of Section 17.0.]

8.5 Test Calculations. You must perform all of the calculations in Table 3 of Section 17 and the calculations described in Sections 8.5.1 through 8.5.5.

8.5.1 The Assumed Reynolds Number. Verify the assumed Reynolds number (N_{re}) by substituting the sampling rate (Q_s) calculated in Equation 7 into Equation 8. Then use Table 5 of Section 17 to determine if the N_{re} used in Equation 5 was correct.

8.5.2 Final Sampling Rate. Recalculate the final sampling rate (Q_s) if the assumed Reynolds number used in your initial calculation is not correct. Use Equation 7 to recalculate the optimum sampling rate (Q_s).

8.5.3 Meter Box ΔH. Use Equation 9 to calculate the meter box ΔH after you calculate the optimum sampling rate and confirm the Reynolds number.

[**Note:** The stack gas temperature may vary during the test, which could affect the sampling rate. If the stack gas temperature varies, you must make slight adjustments in the meter box ΔH to maintain the correct constant cut diameters. Therefore, use Equation 9 to recalculate the ΔH values for 50°F above and below the stack temperature measured during the preliminary traverse (see Section 8.3.4.1), and document this information in Table 4 of Section 17.]

8.5.4 Choosing a Sampling Nozzle. Select one or more nozzle sizes to provide for near isokinetic sampling rate (that is, 80 percent to 120 percent). This will also minimize an isokinetic sampling error for the particles at each point. First calculate the mean stack gas velocity, v_s, using Equation 11. See Section 8.7.2 for information on correcting for blockage and use of different pitot tube coefficients. Then use Equation 12 to calculate the diameter of a nozzle that provides for isokinetic sampling at the mean stack gas velocity at flow Q_s. From the available nozzles just smaller and just larger of this diameter, D, select the most promising nozzle. Perform the following steps for the selected nozzle.

8.5.4.1 *Minimum/maximum nozzle/stack velocity ratio.* Use Equation 14 to calculate the minimum nozzle/stack velocity ratio, R_{min}. Use Equation 15 to calculate the maximum nozzle/stack velocity ratio, R_{max}.

8.5.4.2 *Minimum gas velocity.* Use Equation 16 to calculate the minimum gas velocity (v_{min}) if R_{min} is an imaginary number (negative value under the square root function) or if R_{min} is less than 0.5. Use Equation 17 to calculate v_{min} if R_{min} is greater than or equal to 0.5.

8.5.4.3 *Maximum stack velocity.* Use Equation 18 to calculate the maximum stack velocity (v_{max}) if R_{max} is less than 1.5. Use Equation 19 to calculate the stack velocity if R_{max} is greater than or equal to 1.5.

8.5.4.4 *Conversion of gas velocities to velocity pressure.* Use Equation 20 to convert v_{min} to minimum velocity pressure, Δp_{min}. Use Equation 21 to convert v_{max} to maximum velocity pressure, Δp_{max}.

8.5.4.5 Compare minimum and maximum velocity pressures with the observed velocity pressures at all traverse points during the preliminary test (see Section 8.3.4.2).

8.5.5 Optimum sampling nozzle. The nozzle you selected is appropriate if all the observed velocity pressures during the preliminary test fall within the range of the Δp_{min} and Δp_{max}. Make sure the following requirements are met. Then follow the procedures in Sections 8.5.5.1 and 8.5.5.2.

(a) Choose an optimum nozzle that provides for isokinetic sampling conditions as close to 100 percent as possible. This is prudent because even if there are slight variations in the gas flow rate, gas temperature, or gas composition during the actual test, you have the maximum assurance of satisfying the isokinetic criteria. Generally, one of the two candidate nozzles selected will be closer to optimum (see Section 8.5.4).

(b) When testing is for $PM_{2.5}$ only, you may have only two traverse points out of 12 that are outside the range of the Δp_{min} and Δp_{max} (i.e., 16 percent failure rate rounded to the nearest whole number). If the coarse fraction for PM_{10} determination is included, only one traverse point out of 12 can fall outside the minimum-maximum velocity pressure range (i.e., 8 percent failure rate rounded to the nearest whole number).

8.5.5.1 *Precheck.* Visually check the selected nozzle for dents before use.

8.5.5.2 *Attach the pre-selected nozzle.* Screw the pre-selected nozzle onto the main body of cyclone I using Teflon® tape. Use a union and cascade adaptor to connect the cyclone IV inlet to the outlet of cyclone I (see Figure 2 of Section 17).

8.6 Sampling Train Preparation. A schematic of the sampling train used in this method is shown in Figure 1 of Section 17. First, assemble the train and complete the leak check on the combined cyclone sampling head and pitot tube. Use the following procedures to prepare the sampling train.

[**Note:** Do not contaminate the sampling train during preparation and assembly. Keep all openings where contamination can occur

covered until just prior to assembly or until sampling is about to begin.]

8.6.1 Sampling Head and Pitot Tube. Assemble the combined cyclone train. The O-rings used in the train have a temperature limit of approximately 205 °C (400 °F). Use cyclones with stainless steel sealing rings when stack temperatures exceed 205 °C (400 °F). This method may not be suitable for sources with stack gas temperatures exceeding 260 °C (500 °F). You may need to take extraordinary measures including the use of specialty metals (*e.g.,* Inconel) to achieve reliable particulate mass since the threads of the cyclones may gall or seize, thus preventing the recovery of the collected particulate matter and rendering the cyclone unusable for subsequent use. You must also keep the nozzle covered to protect it from nicks and scratches.

8.6.2 Filterable Particulate Filter Holder and Pitot Tube. Attach the pre-selected filter holder to the end of the combined cyclone sampling head (see Figure 2 of Section 17). Attach the S-type pitot tube to the combined cyclones after the sampling head is fully attached to the end of the probe.

[**Note:** The pitot tube tip must be mounted: slightly beyond the combined head cyclone sampling assembly; and at least one inch off the gas flow path into the cyclone nozzle. This is similar to the pitot tube placement in Method 17.]

Weld the sensing lines to the outside of the probe to ensure proper alignment of the pitot tube. Provide unions on the sensing lines so that you can connect and disconnect the S-type pitot tube tips from the combined cyclone sampling head before and after each run.

[**Note:** Calibrate the pitot tube on the sampling head because the cyclone body is a potential source flow disturbance.]

8.6.3 Filter. You must number and tare the filters before use. To tare the filters, desiccate each filter at 20 ± 5.6 °C (68 ± 10 °F) and ambient pressure for at least 24 hours and weigh at intervals of at least 6 hours to a constant weight, *i.e.,* <0.5 mg change from previous weighing; record results to the nearest 0.1 mg. During each weighing, the filter must not be exposed to the laboratory atmosphere for longer than 2 minutes and a relative humidity above 50 percent. Alternatively, the filters may be oven-dried at 104 °C (220 °F) for 2 to 3 hours, desiccated for 2 hours, and weighed. Use tweezers or clean disposable surgical gloves to place a labeled (identified) and pre-weighed filter in both filterable and condensable particulate filter holders. You must center the filter and properly place the gasket so that the sample gas stream will not circumvent the filter. Check the filter for tears after the assembly is completed. Then screw the filter housing together to prevent the seal from leaking.

8.6.7 Moisture Trap. If you are measuring only filterable particulate (or you are sure that the filtration temperature will be maintained below 30 °C (85 °F)), then an empty modified Greenburg Smith impinger followed by an impinger containing silica gel is required. Alternatives described in Method 5 may also be used to collect moisture that passes through the ambient filter. If you are measuring condensable particulate matter in combination with this method, then follow the procedures in Method 202 for moisture collection.

8.6.8 *Leak Check.* Use the procedures outlined in Section 8.4 of Method 5 to leak check the entire sampling system. Specifically perform the following procedures:

8.6.8.1 *Sampling train.* You must pretest the entire sampling train for leaks. The pretest leak check must have a leak rate of not more than 0.02 ACFM or 4 percent of the average sample flow during the test run, whichever is less. Additionally, you must conduct the leak check at a vacuum equal to or greater than the vacuum anticipated during the test run. Enter the leak check results on the field test data sheet (see Section 11.1) for the specific test.

[**Note:** Do not conduct a leak check during port changes.]

8.6.8.2 *Pitot tube assembly.* After you leak check the sample train, perform a leak check of the pitot tube assembly. Follow the procedures outlined in Section 8.4.1 of Method 5.

8.6.9 Sampling Head. You must preheat the combined sampling head to the stack temperature of the gas stream at the test location (±10 °C, ±50 °F). This will heat the sampling head and prevent moisture from condensing from the sample gas stream. Record the site barometric pressure and stack pressure on the field test data sheet.

8.6.9.1 *Unsaturated stacks.* You must complete a passive warmup (of 30–40 min) within the stack before the run begins to avoid internal condensation.

[**Note:** Unsaturated stacks do not have entrained droplets and operate at temperatures above the local dew point of the stack gas.]

8.6.9.2 *Shortened warm-up of unsaturated stacks.* You can shorten the warmup time by thermostated heating outside the stack (such as by a heat gun). Then place the heated sampling head inside the stack and allow the temperature to equilibrate.

8.7 Sampling Train Operation. Operate the sampling train the same as described in Section 4.1.5 of Method 5, except use the procedures in this section for isokinetic sampling and flow rate adjustment. Maintain the flow rate calculated in Section 8.4.1 throughout the run, provided the stack temperature is within 28 °C (50 °F) of the temperature used to calculate ΔH. If stack temperatures vary by more than 28 °C (50 °F), use the appropriate ΔH value calculated in Section 8.5.3. Determine the minimum number of traverse points as in Figure 7 of Section 17. Determine the minimum total projected sampling time (t_r), based on achieving the data quality objectives or emission limit of the affected facility. We recommend you round the number of minutes sampled at each point to the nearest 15 seconds. Perform the following procedures:

8.7.1 Sample Point Dwell Time. You must calculate the dwell time (that is, sampling time) for each sampling point to ensure that the overall run provides a velocity-weighted average that is representative of the entire gas stream. Vary the dwell time, or sampling time, at each traverse point proportionately with the point velocity.

8.7.1.1 *Dwell time at first sampling point.* Calculate the dwell time for the first point, t_1, using Equation 22. You must use the data from the preliminary traverse. Here, N_{tp} equals the total number of traverse points.

8.7.1.2 *Dwell time at remaining sampling points.* Calculate the dwell time at each of the remaining traverse points, t_n, using Equation 23. This time you must use the actual test run data.

[**Note:** Round the dwell times to the nearest 15 seconds.] Each traverse point must have a dwell time of at least 2 minutes.

8.7.2 Adjusted Velocity Pressure. When selecting your sampling points using your preliminary velocity traverse data, your preliminary velocity pressures must be adjusted to take into account the increase in velocity due to blockage. Also, you must adjust your preliminary velocity data for differences in pitot tube coefficients. Use the following instructions to adjust the preliminary velocity pressure.

8.7.2.1 *Different pitot tube coefficient.* You must use Equation 24 to correct the recorded preliminary velocity pressures if the pitot tube mounted on the combined cyclone sampling head has a different pitot tube coefficient than the pitot tube used during the preliminary velocity traverse (see Section 8.3.4).

8.7.2.2 *Probe blockage factor.* You must use Equation 25 to calculate an average probe blockage correction factor (b_f) if the diameter of your stack or duct is between 18 and 24 inches. A probe blockage factor is calculated because of the flow blockage caused by the relatively large cross-sectional area of the combined cyclone sampling head, as discussed in Section 8.3.2.2 and illustrated in Figure 8 of Section 17.

[**Note:** The sampling head (including the PM_{10} cyclone, $PM_{2.5}$ cyclone, pitot and filter holder) has a projected area of approximately 20.5 square inches when oriented into the gas stream. As the probe is moved from the most outer to the most inner point, the amount of blockage that actually occurs ranges from approximately 4 square inches to the full 20.5 inches. The average cross-sectional area blocked is 12 square inches.]

8.7.2.3 *Final adjusted velocity pressure.* Calculate the final adjusted velocity pressure (Δp_{s2}) using Equation 26.

[**Note:** Figure 8 of Section 17 illustrates that the blockage effect of the large combined cyclone sampling head increases rapidly below diameters of 18 inches. Therefore, you must follow the procedures outlined in Method 1A to conduct tests in small stacks (< inches diameter). You must conduct the velocity traverse downstream of the sampling location or immediately before the test run.]

8.7.3 Sample Collection. Collect samples the same as described in Section 4.1.5 of Method 5, except use the procedures in this section for isokinetic sampling and flow rate adjustment. Maintain the flow rate calculated in Section 8.5 throughout the run, provided the stack temperature is within 28 °C (50 °F)

of the temperature used to calculate ΔH. If stack temperatures vary by more than 28 °C (50 °F), use the appropriate ΔH value calculated in Section 8.5.3. Calculate the dwell time at each traverse point as in Equations 22 and 23. In addition to these procedures, you must also use running starts and stops if the static pressure at the sampling location is more negative than 5 in. water column. This prevents back pressure from rupturing the sample filter. If you use a running start, adjust the flow rate to the calculated value after you perform the leak check (see Section 8.4).

8.7.3.1 *Level and zero manometers.* Periodically check the level and zero point of the manometers during the traverse. Vibrations and temperature changes may cause them to drift.

8.7.3.2 *Portholes.* Clean the portholes prior to the test run. This will minimize the chance of collecting deposited material in the nozzle.

8.7.3.3 *Sampling procedures.* Verify that the combined cyclone sampling head temperature is at stack temperature (± 10 °C, ± 50 °F).

[**Note:** For many stacks, portions of the cyclones and filter will be external to the stack during part of the sampling traverse. Therefore, you must heat or insulate portions of the cyclones and filter that are not within the stack in order to maintain the sampling head temperature at the stack temperature. Maintaining the temperature will insure proper particle sizing and prevent condensation on the walls of the cyclones.]

Remove the protective cover from the nozzle. To begin sampling, immediately start the pump and adjust the flow to calculated isokinetic conditions. Position the probe at the first sampling point with the nozzle pointing directly into the gas stream. Ensure the probe/pitot tube assembly is leveled.

[**Note:** When the probe is in position, block off the openings around the probe and porthole to prevent unrepresentative dilution of the gas stream.]

(a) Traverse the stack cross-section, as required by Method 1 with the exception that you are only required to perform a 12-point traverse. Do not bump the cyclone nozzle into the stack walls when sampling near the walls or when removing or inserting the probe through the portholes. This will minimize the chance of extracting deposited materials.

(b) Record the data required on the field test data sheet for each run. Record the initial dry gas meter reading. Then take dry gas meter readings at the following times: the beginning and end of each sample time increment; when changes in flow rates are made; and when sampling is halted. Compare the velocity pressure measurements (Equations 20 and 21) with the velocity pressure measured during the preliminary traverse. Keep the meter box ΔH at the value calculated in Section 8.5.3 for the stack temperature that is observed during the test. Record all the point-by-point data and other source test parameters on the field test data sheet. Do not leak check the sampling system during port changes.

(c) Maintain the flow through the sampling system at the last sampling point. Remove the sampling train from the stack while it is still operating (running stop). Then stop the pump, and record the final dry gas meter reading and other test parameters on the field test data sheet.

8.7.4 Process Data. You must document data and information on the process unit tested, the particulate control system used to control emissions, any non-particulate control system that may affect particulate emissions, the sampling train conditions, and weather conditions. Discontinue the test if the operating conditions may cause non-representative particulate emissions.

8.7.4.1 *Particulate control system data.* Use the process and control system data to determine if representative operating conditions were maintained throughout the testing period.

8.7.4.2 *Sampling train data.* Use the sampling train data to confirm that the measured particulate emissions are accurate and complete.

8.7.5 Sample Recovery. First remove the sample head (combined cyclone/filter assembly) from the stack. After the sample head is removed, perform a post-test leak check of the probe and sample train. Then recover the components from the cyclone/filter. Refer to the following sections for more detailed information.

8.7.5.1 *Remove sampling head.* At the conclusion of the test, document final test conditions and remove the pitot tube and combined cyclone sampling head from the source. Make sure that you do not scrape the pitot tube or the combined cyclone sampling head against the port or stack walls.

[**Note:** After you stop the gas flow, make sure you keep the combined cyclone head level to avoid tipping dust from the cyclone cups into the filter and/or down-comer lines.]

After cooling and when the probe can be safely handled, wipe off all external surfaces near the cyclone nozzle, and cap the inlet to cyclone I. Remove the combined cyclone/filter sampling head from the probe. Cap the outlet of the filter housing to prevent particulate matter from entering the assembly.

8.7.5.2 *Leak check probe/sample train assembly (post-test).* Leak check the remainder of the probe and sample train assembly (including meter box) after removing the combined cyclone head/filter. You must conduct the leak rate at a vacuum equal to or greater than the maximum vacuum achieved during the test run. Enter the results of the leak check onto the field test data sheet. If the leak rate of the sampling train (without the combined cyclone sampling head) exceeds 0.02 ACFM or 4 percent of the average sampling rate during the test run (whichever is less), the run is invalid, and you must repeat it.

8.7.5.3 Weigh or measure the volume of the liquid collected in the water collection impingers and silica trap. Measure the liquid in the first impingers to within 1 ml using a clean graduated cylinder or by weighing it to within 0.5 g using a balance. Record the volume of the liquid or weight of the liquid present to be used to calculate the moisture content of the effluent gas.

8.7.5.4 If a balance is available in the field, weigh the silica impinger to within 0.5 g. Note the color of the indicating silica gel in the last impinger to determine whether it has been completely spent, and make a notation of its condition. If you are measuring condensable particulate matter in combination with this method, then leave the silica in the impinger for recovery after the post-test nitrogen purge is complete.

8.7.5.5 *Recovery of particulate matter.* Recovery involves the quantitative transfer of particles in the following size range: > 10 micrometers; ≤ 10 micrometers but > 2.5 micrometers; and ≤ 2.5 micrometers. You must use a Nylon or Teflon brush and an acetone rinse to recover particles from the combined cyclone/filter sampling head. Use the following procedures for each container.

(a) *Container #1, ≤ $PM_{2.5}$ micrometer filterable particulate*—Use tweezers and/or clean disposable surgical gloves to remove the filter from the filter holder. Place the filter in the petri dish that you identified as Container #1. Using a dry Nylon bristle brush and/or a sharp-edged blade, carefully transfer any particulate matter and/or filter fibers that adhere to the filter holder gasket or filter support screen to the petri dish. Seal the container. This container holds particles ≤ 2.5 micrometers that are caught on the in-stack filter.

(b) *Container #2, > PM_{10} micrometer filterable particulate*—Quantitatively recover the particulate matter from the cyclone I cup and acetone rinses (and brush cleaning) of the cyclone cup, internal surface of the nozzle, and cyclone I internal surfaces, including the outside surface of the downcomer line. Seal the container and mark the liquid level on the outside of the container. You must keep any dust found on the outside of cyclone I and cyclone nozzle external surfaces out of the sample. This container holds particulate matter > 10 micrometers.

(c) *Container #3, Filterable particulate ≤ 10 micrometer and > 2.5 micrometers*—Place the solids from cyclone cup IV and the acetone (and brush cleaning) rinses of the cyclone I turnaround cup (above inner downcomer line), inside of the downcomer line, and interior surfaces of cyclone IV into Container #3. Seal the container and mark the liquid level on the outside. This container holds particulate matter ≤ 10 micrometers but > 2.5 micrometers.

(d) *Container #4, ≤ $PM_{2.5}$ micrometers acetone rinses of the exit tube of cyclone IV and front half of the filter holder*—Retrieve the acetone rinses (and brush cleaning) of the exit tube of cyclone IV and the front half of the filter holder in container #4. Seal the container and mark the liquid level on the outside of the container. This container holds particulate matter that is ≤ 2.5 micrometers.

(e) *Container #5, Cold impinger water*—If the water from the cold impinger used for moisture collection has been weighed in the field, it can be discarded. Otherwise quantitatively transfer liquid from the cold impinger that follows the ambient filter into a clean sample bottle (glass or plastic). Mark the liquid level on the bottle. This container holds the remainder of the liquid water from the emission gases.

(f) *Container #6, Silica Gel Absorbent*—Transfer the silica gel to its original container

and seal. A funnel may make it easier to pour the silica gel without spilling. A rubber policeman may be used as an aid in removing the silica gel from the impinger. It is not necessary to remove the small amount of silica gel dust particles that may adhere to the impinger wall and are difficult to remove. Since the gain in weight is to be used for moisture calculations, do not use any water or other liquids to transfer the silica gel. If the silica gel has been weighed in the field to measure water content, it can be discarded. Otherwise the contents of Container #6 are weighed during sample analysis.

(g) *Container #7, Acetone Rinse Blank*—Take 100 ml of the acetone directly from the wash bottle you used, and place it in Container #7 labeled Acetone Rinse Blank.

8.7.6 Transport Procedures. Containers must remain in an upright position at all times during shipping. You do not have to ship the containers under dry or blue ice.

9.0 Quality Control

9.1 Daily Quality Checks. You must perform daily quality checks using data quality indicators that require review of recording and transfer of raw data, calculations, and documentation of testing procedures.

9.2 Calculation Verification. Verify the calculations by independent, manual checks. You must flag any suspect data and identify the nature of the problem and potential effect on data quality. After you complete the test, prepare a data summary, and compile all the calculations and raw data sheets.

9.3 Conditions. You must document data and information on the process unit tested, the particulate control system used to control emissions, any non-particulate control system that may affect particulate emissions, the sampling train conditions, and weather conditions. Discontinue the test if the operating conditions may cause non-representative particulate emissions.

9.4 Health and Safety Plan. Develop a health and safety plan to ensure the safety of your employees who are on site conducting the particulate emission test. Your plan must conform to all applicable OSHA, MSHA, and DOT regulatory requirements. The procedures must also conform to the plant health and safety requirements.

9.5 Calibration Checks. Perform calibration check procedures on analytical balances each time they are used.

9.6 Glassware. Use class A volumetric glassware for titrations, or calibrate your equipment against NIST traceable glassware.

10.0 Calibration and Standardization

[**Note:** Maintain a laboratory log of all calibrations.]

10.1 Gas Flow Velocities. Measure the gas flow velocities at the sampling locations using Method 2. You must use an S-type pitot tube that meets the required EPA specifications (EPA Publication 600/4–77–0217b) during these velocity measurements. You must also complete the following:

(a) Visually inspect the S-type pitot tube before sampling.

(b) Leak check both legs of the pitot tube before and after sampling.

(c) Maintain proper orientation of the S-type pitot tube while making measurements.

10.1.1 S-type pitot tube orientation. The S-type pitot tube is oriented properly when the yaw and the pitch axis are 90 degrees to the air flow.

10.1.2 Average velocity pressure record. Instead of recording either high or low values, record the average velocity pressure at each point during flow measurements.

10.1.3 Pitot tube coefficient. Determine the pitot tube coefficient based on physical measurement techniques described in Method 2.

[**Note:** You must calibrate the pitot tube on the sampling head because of potential interferences from the cyclone body. Refer to Section 8.7.2 for additional information.]

10.2 Thermocouple Calibration. Calibrate the thermocouples using the procedures described in Section 10.1.4.1.2 of Method 2 to calibrate the thermocouples. Calibrate each temperature sensor at a minimum of three points over the anticipated range of use against an NIST-traceable mercury-in-glass thermometer.

10.3 Nozzles. You may use stainless steel (316 or equivalent) or Teflon®-coated nozzles for isokinetic sampling. Make sure that all nozzles are thoroughly cleaned, visually inspected, and calibrated according to the procedure outlined in Section 10.1 of Method 5.

10.4 Dry Gas Meter Calibration. Calibrate your dry gas meter following the calibration procedures in Section 16.1 of Method 5. Also, make sure you fully calibrate the dry gas meter to determine the volume correction factor prior to field use. Post-test calibration checks must be performed as soon as possible after the equipment has been returned to the shop. Your pretest and post-test calibrations must agree within ±5 percent.

11.0 Analytical Procedures

11.1 Analytical Data Sheet. Record all data on the analytical data sheet. Obtain the data sheet from Figure 5–6 of Method 5. Alternatively, data may be recorded electronically using software applications such as the Electronic Reporting Tool (ERT) located at the following internet address: (*http://www.epa.gov/ttn/chief/ert/ert_tool.html*).

11.2 Dry Weight of Particulate Matter. Determine the dry weight of particulate following procedures outlined in this section.

11.2.1 Container #1, ≤ $PM_{2.5}$ micrometer filterable particulate. Transfer the filter and any loose particulate from the sample container to a tared glass weighing dish. Desiccate for 24 hours in a desiccator containing anhydrous calcium sulfate or indicating silica gel. Weigh to a constant weight, and report the results to the nearest 0.1 mg. For the purposes of this section, the term ''constant weight'' means a difference of no more than 0.5 mg or 1 percent of total weight less tare weight, whichever is greater, between two consecutive weighings, with no less than 6 hours of desiccation time between weighings.

11.2.2 Container #2, > PM_{10} micrometer filterable particulate acetone rinse. Separately treat this container like Container #1.

11.2.3 Container #3, Filterable particulate ≤ 10 micrometer and ≥ 2.5 micrometers acetone rinse. Separately treat this container like Container #1.

11.2.4 Container #4, ≤ $PM_{2.5}$ micrometers acetone rinse of the exit tube of cyclone IV and front half of the filter holder. Note the level of liquid in the container, and confirm on the analysis sheet whether leakage occurred during transport. If a noticeable amount of leakage has occurred, either void the sample or use methods, subject to the approval of the Administrator, to correct the final results. Quantitatively transfer the contents to a tared 250 ml beaker, and evaporate to dryness at ambient temperature and pressure. Desiccate for 24 hours, and weigh to a constant weight. Report the results to the nearest 0.1 g.

11.2.5 Container #5, Cold impinger water. If the amount of water has not been determined in the field, note the level of liquid in the container, and confirm on the analysis sheet whether leakage occurred during transport. If a noticeable amount of leakage has occurred, either void the sample or use methods, subject to the approval of the Administrator, to correct the final results. Measure the liquid in this container either volumetrically to ±1 ml or gravimetrically to ±0.5 g.

11.2.6 Container #6, Silica gel absorbent. Weigh the spent silica gel (or silica gel plus impinger) to the nearest 0.5 g using a balance. This step may be conducted in the field.

11.2.7 Container #7, Acetone rinse blank. Use 100 ml of acetone from the blank container for this analysis. If insufficient liquid is available or if the acetone has been lost due to container breakage, either void the sample or use methods, subject to the approval of the Administrator, to correct the final results. Transfer 100 ml of the acetone to a clean 250 ml beaker. Evaporate the acetone at room temperature and pressure in a laboratory hood to approximately 10 ml. Quantitatively transfer the beaker contents to a 50 ml preweighed tin, and evaporate to dryness at room temperature and pressure in a laboratory hood. Following evaporation, desiccate the residue for 24 hours in a desiccator containing anhydrous calcium sulfate. Weigh and report the results to the nearest 0.1 mg.

12.0 Calculations and Data Analysis

12.1 Nomenclature. Report results in International System of Units (SI units) unless the regulatory authority for compliance testing specifies English units. The following nomenclature is used.

A = Area of stack or duct at sampling location, square inches.

A_n = Area of nozzle, square feet.

b_f = Average blockage factor calculated in Equation 25, dimensionless.

B_{ws} = Moisture content of gas stream, fraction e.g., 10% H_2O is B_{ws} = 0.10).

C = Cunningham correction factor for particle diameter, D_p, and calculated using the actual stack gas temperature, dimensionless.

$\%CO_2$ = Carbon Dioxide content of gas stream, % by volume.

C_a = Acetone blank concentration, mg/mg.

C_{fPM10} = Conc. of filterable PM_{10} particulate matter, gr/DSCF.

$C_{fPM2.5}$ = Conc. of filterable $PM_{2.5}$ particulate matter, gr/DSCF.
C_p = Pitot coefficient for the combined cyclone pitot, dimensionless.
C_p' = Coefficient for the pitot used in the preliminary traverse, dimensionless.
C_r = Re-estimated Cunningham correction factor for particle diameter equivalent to the actual cut size diameter and calculated using the actual stack gas temperature, dimensionless.
C_{tf} = Conc. of total filterable particulate matter, gr/DSCF.
$C_1 = -150.3162$ (micropoise)
$C_2 = 18.0614$ (micropoise/$K^{0.5}$) = 13.4622 (micropoise/$R^{0.5}$)
$C_3 = 1.19183 \times 10^6$ (micropoise/K^2) = 3.86153×10^6 (micropoise/R^2)
$C_4 = 0.591123$ (micropoise)
$C_5 = 91.9723$ (micropoise)
$C_6 = 4.91705 \times 10^{-5}$ (micropoise/K^2) = 1.51761×10^{-5} (micropoise/R^2)
D= Inner diameter of sampling nozzle mounted on Cyclone I, in.
D_p = Physical particle size, micrometers.
D_{50} = Particle cut diameter, micrometers.
D_{50-1}= Re-calculated particle cut diameters based on re-estimated C_r, micrometers.
D_{50LL} = Cut diameter for cyclone I corresponding to the 2.25 micrometer cut diameter for cyclone IV, micrometers.
D_{50N} = D_{50} value for cyclone IV calculated during the Nth iterative step, micrometers.
$D_{50\,(N+1)}$ = D_{50} value for cyclone IV calculated during the N+1 iterative step, micrometers.
D_{50T} = Cyclone I cut diameter corresponding to the middle of the overlap zone shown in Figure 9 of Section 17, micrometers.
I = Percent isokinetic sampling, dimensionless.
in. = Inches
K_p = 85.49, [(ft/sec)/(pounds/mole −°R)].
m_a = Mass of residue of acetone after evaporation, mg.
M_d = Molecular weight of dry gas, pounds/pound mole.
M_w = Molecular weight of wet gas, pounds/pound mole.
M_1 = Milligrams of particulate matter collected on the filter, ≤ 2.5 micrometers.
M_2 = Milligrams of particulate matter recovered from Container #2 (acetone blank corrected), >10 micrometers.
M_3 = Milligrams of particulate matter recovered from Container #3 (acetone blank corrected), ≤10 and >2.5 micrometers.
M_4 = Milligrams of particulate matter recovered from Container #4 (acetone blank corrected), ≤2.5 micrometers.
N_{tp} = Number of iterative steps or total traverse points.
N_{re} = Reynolds number, dimensionless.
$\%O_{2,wet}$ = Oxygen content of gas stream, % by volume of wet gas.

[**Note:** The oxygen percentage used in Equation 3 is on a wet gas basis. That means that since oxygen is typically measured on a dry gas basis, the measured $\%O_2$ must be multiplied by the quantity $(1-B_{ws})$ to convert to the actual volume fraction. Therefore, $\%O_{2,wet} = (1-B_{ws}) * \%O_2$, dry]

P_{bar} = Barometric pressure, in. Hg.
P_s = Absolute stack gas pressure, in. Hg.
Q_s = Sampling rate for cyclone I to achieve specified D_{50}, ACFM.
Q_{sST} = Dry gas sampling rate through the sampling assembly, DSCFM.
Q_I = Sampling rate for cyclone I to achieve specified D_{50}, ACFM.
Q_{IV} = Sampling rate for cyclone IV to achieve specified D_{50}, ACFM.
R_{max} = Nozzle/stack velocity ratio parameter, dimensionless.
R_{min} = Nozzle/stack velocity ratio parameter, dimensionless.
T_m = Meter box and orifice gas temperature, °R.
t_n = Sampling time at point n, min.
t_r = Total projected run time, min.
T_s = Absolute stack gas temperature, °R.
t_1 = Sampling time at point 1, min.
v_{max} = Maximum gas velocity calculated from Equations 18 or 19, ft/sec.
v_{min} = Minimum gas velocity calculated from Equations 16 or 17, ft/sec.
v_n = Sample gas velocity in the nozzle, ft/sec.
v_s = Velocity of stack gas, ft/sec.
V_a = Volume of acetone blank, ml.
V_{aw} = Volume of acetone used in blank wash, ml.
V_c = Quantity of water captured in impingers and silica gel, ml.
V_m = Dry gas meter volume sampled, ACF.
V_{ms} = Dry gas meter volume sampled, corrected to standard conditions, DSCF.
V_{ws} = Volume of water vapor, SCF.
V_b = Volume of aliquot taken for IC analysis, ml.
V_{ic} = Volume of impinger contents sample, ml.
W_a = Weight of residue in acetone blank wash, mg.
Z = Ratio between estimated cyclone IV D_{50} values, dimensionless.
ΔH = Meter box orifice pressure drop, in. W.C.
$\Delta H_@$ = Pressure drop across orifice at flow rate of 0.75 SCFM at standard conditions, in. W.C.

[**Note:** specific to each orifice and meter box.]

$[(\Delta p)^{0.5}]_{avg}$ = Average of square roots of the velocity pressures measured during the preliminary traverse, in. W.C.
Δp_m = Observed velocity pressure using S-type pitot tube in preliminary traverse, in. W.C.
Δp_{max} = Maximum velocity pressure, in. W.C.
Δp_{min} = Minimum velocity pressure, in. W.C.
Δp_n = Velocity pressure measured at point n during the test run, in. W.C.
Δp_s = Velocity pressure calculated in Equation 24, in. W.C.
Δp_{s1} = Velocity pressure adjusted for combined cyclone pitot tube, in. W.C.
Δp_{s2} = Velocity pressure corrected for blockage, in. W.C.
Δp_1 = Velocity pressure measured at point 1, in. W.C.
γ = Dry gas meter gamma value, dimensionless.
μ = Gas viscosity, micropoise.
θ = Total run time, minutes.
ρ_a = Density of acetone, mg/ml (see label on bottle).
12.0 = Constant calculated as 60 percent of 20.5 square inch cross-sectional area of combined cyclone head, square inches.

12.2 Calculations. Perform all of the calculations found in Table 6 of Section 17. Table 6 of Section 17 also provides instructions and references for the calculations.

12.3 Analyses. Analyze D_{50} of cyclone IV and the concentrations of the particulate matter in the various size ranges.

12.3.1 D_{50} of cyclone IV. To determine the actual D_{50} for cyclone IV, recalculate the Cunningham correction factor and the Reynolds number for the best estimate of cyclone IV D_{50}. The following sections describe additional information on how to recalculate the Cunningham correction factor and determine which Reynolds number to use.

12.3.1.1 *Cunningham correction factor.* Recalculate the initial estimate of the Cunningham correction factor using the actual test data. Insert the actual test run data and D_{50} of 2.5 micrometers into Equation 4. This will give you a new Cunningham correction factor that is based on actual data.

12.3.1.2 *Initial D_{50} for cyclone IV.* Determine the initial estimate for cyclone IV D_{50} using the test condition Reynolds number calculated with Equation 8 as indicated in Table 3 of Section 17. Refer to the following instructions.

(a) If the Reynolds number is less than 3,162, calculate the D_{50} for cyclone IV with Equation 33, using actual test data.

(b) If the Reynolds number is equal to or greater than 3,162, calculate the D_{50} for cyclone IV with Equation 34, using actual test data.

(c) Insert the ''new'' D_{50} value calculated by either Equation 33 or 34 into Equation 35 to re-establish the Cunningham Correction Factor (C_r).

[**Note:** Use the test condition calculated Reynolds number to determine the most appropriate equation (Equation 33 or 34).]

12.3.1.3 *Re-establish cyclone IV D_{50}.* Use the re-established Cunningham correction factor (calculated in the previous step) and the calculated Reynolds number to determine D_{50-1}.

(a) Use Equation 36 to calculate the re-established cyclone IV D_{50-1} if the Reynolds number is less than 3,162.

(b) Use Equation 37 to calculate the re-established cyclone IV D_{50-1} if the Reynolds number is equal to or greater than 3,162.

12.3.1.4 *Establishing ''Z'' values.* The ''Z'' value is the result of an analysis that you must perform to determine if the Cunningham correction factor is acceptable. Compare the calculated cyclone IV D_{50} (either Equation 33 or 34) to the re-established cyclone IV D_{50-1} (either Equation 36 or 37) values based upon the test condition calculated Reynolds number (Equation 38). Follow these procedures.

(a) Use Equation 38 to calculate the ''Z''. If the ''Z'' value is between 0.99 and 1.01, the D_{50-1} value is the best estimate of the cyclone IV D_{50} cut diameter for your test run.

(b) If the ''Z'' value is greater than 1.01 or less than 0.99, re-establish a Cunningham correction factor based on the D_{50-1} value determined in either Equations 36 or 37, depending upon the test condition Reynolds number.

(c) Use the second revised Cunningham correction to re-calculate the cyclone IV D_{50}.

(d) Repeat this iterative process as many times as necessary using the prescribed

equations until you achieve the criteria documented in Equation 39.

12.3.2 Particulate concentration. Use the particulate catch weights in the combined cyclone sampling train to calculate the concentration of particulate matter in the various size ranges. You must correct the concentrations for the acetone blank.

12.3.2.1 *Acetone blank concentration.* Use Equation 41 to calculate the acetone blank concentration (C_a).

12.3.2.2 *Acetone blank weight.* Use Equation 42 to calculate the acetone blank weight (W_a).

[**Note:** Correct each of the particulate matter weights per size fraction by subtracting the acetone blank weight (that is, $M_{2,3,4}$–W_a)].

12.3.2.3 *Particulate weight catch per size fraction.* Subtract the weight of the acetone blank from the particulate weight catch in each size fraction.

[**Note:** Do not subtract a blank value of greater than 0.001 percent of the weight of the acetone used from the sample weight. Use the following procedures.]

(a) Use Equation 43 to calculate the particulate matter recovered from Containers #1, #2, #3, and #4. This is the total collectable particulate matter (C_{tf}).

(b) Use Equation 44 to determine the quantitative recovery of PM_{10} particulate matter (C_{fPM10}) from Containers #1, #3, and #4.

(c) Use Equation 45 to determine the quantitative recovery of $PM_{2.5}$ particulate ($C_{fPM2.5}$) recovered from Containers #1 and #4.

12.4 Reporting. You must include the following list of conventional elements in the emissions test report.

(a) Emission test description including any deviations from this protocol.

(b) Summary data tables on a run-by-run basis.

(c) Flowchart of the process or processes tested.

(d) Sketch of the sampling location.

(e) Preliminary traverse data sheets including cyclonic flow checks.

(f) Raw field data sheets.

(g) Laboratory analytical sheets and case narratives.

(h) Sample calculations.

(i) Pretest and post-test calibration data.

(j) Chain of custody forms.

(k) Documentation of process and air pollution control system data.

12.5 Equations. Use the following equations to complete the calculations required in this test method.

Molecular Weight of Dry Gas. Calculate the molecular weight of the dry gas using Equation 1.

$$M_d = 0.44\left(\%\,CO_2\right) + 0.32\left(\%\,O_2\right) + 0.28\left(100 - \%\,O_2 - \%\,CO_2\right) \qquad \text{Eq. 1}$$

Molecular Weight of Wet Gas. Calculate the molecular weight of the stack gas on a wet basis using Equation 2.

$$M_w = M_d\left(1 - B_{ws}\right) + 18\left(B_{ws}\right) \qquad \text{Eq. 2}$$

Gas Viscosity. Calculate the gas viscosity using Equation 3. This equation uses constants for gas temperatures in °R.

$$\mu = C_1 + C_2\sqrt{T_s} + C_3\,T_s^{-2} + C_4\left(\%\,O_{2,wet}\right) - C_5\,B_{ws} + C_6\,B_{ws}\,T_s^2 \qquad \text{Eq. 3}$$

Cunningham Correction Factor. The Cunningham correction factor is calculated for a 2.25 micrometer diameter particle.

$$C = 1 + 0.0057193\left[\frac{\mu}{P_s\,D_p}\right]\left[\frac{T_s}{M_w}\right]^{0.5} \qquad \text{Eq. 4}$$

Lower Limit Cut Diameter for Cyclone I for N_{re} < 3,162. The Cunningham correction factor is for a 2.25 micrometer diameter particle.

$$D_{50\,LL} = 9.507\;C^{0.3007}\left[\frac{M_w\,P_s}{T_s}\right]^{0.1993} \qquad \text{Eq. 5} \quad \left(N_{re} < 3{,}162\right)$$

Cut Diameter for Cyclone I for the Middle of the Overlap Zone.

$$D_{50\,T} = \left(\frac{11 + D_{50\,LL}}{2}\right) \qquad \text{Eq. 6}$$

Sampling Rate.

$$Q_s = Q_I = 0.07296\ (\mu) \left[\frac{T_s}{M_w\ P_s}\right]^{0.2949} \left[\frac{1}{D_{50\ T}}\right]^{1.4102} \qquad \text{Eq. 7}$$

Reynolds Number.

$$N_{re} = 8.64 \times 10^5 \left[\frac{P_s\ M_w}{T_s}\right] \left[\frac{Q_s}{\mu}\right] \qquad \text{Eq. 8}$$

Meter Box Orifice Pressure Drop.

$$\Delta H = \left[\frac{Q_s\ (1 - B_{ws})\ P_s}{T_s}\right]^2 \left[\frac{1.083\ T_m\ M_d\ \Delta H_@}{P_{bar}}\right] \qquad \text{Eq. 9}$$

Lower Limit Cut Diameter for Cyclone I for $N_{re} \geq 3{,}162$. The Cunningham correction factor is for a 2.25 micrometer diameter particle.

$$D_{50\ LL} = 10.0959\ C^{0.4400} \left[\frac{M_w\ P_s}{T_s}\right]^{0.0600} \qquad \text{Equation 10}\ (N_{re} < 3162)$$

Velocity of Stack Gas. Correct the mean preliminary velocity pressure for C_p and blockage using Equations 23, 24, and 25.

$$v_s = K_p\ C_p \left(\sqrt{(\Delta p)}\right)_{avg} \left[\sqrt{\frac{T_s}{P_s M_w}}\right] \qquad \text{Eq. 11}$$

Calculated Nozzle Diameter for Acceptable Sampling Rate.

$$D = \left[\frac{3.056\ Q_s}{v_s}\right]^{0.5} \qquad \text{Eq. 12}$$

Velocity of Gas in Nozzle.

$$V_n = \frac{\left(\frac{Q_s}{60}\right)}{A_n} \qquad \text{Eq. 13}$$

Minimum Nozzle/Stack Velocity Ratio Parameter.

$$R_{min} = \left[0.2457 + \left(0.3072 - \frac{0.2603\ (\mu)\ (Q_s)^{0.5}}{v_n^{1.5}}\right)^{0.5}\right] \qquad \text{Eq. 14}$$

Maximum Nozzle/Stack Velocity Ratio Parameter.

$$R_{max} = \left[0.4457 + \left(0.5690 + \frac{0.2603\ (\mu)\ (Q_s)^{0.5}}{v_n^{1.5}}\right)^{0.5}\right] \qquad \text{Eq. 15}$$

Minimum Gas Velocity for $R_{min} \leq 0.5$.

$$v_{min} = v_n\ (0.5) \qquad \text{Eq. 16}$$

Minimum Gas Velocity for $R_{min} \geq 0.5$.

$$v_{min} = v_n\ R_{min} \qquad \text{Eq. 17}$$

Maximum Gas Velocity for $R_{max} < 1.5$.

$$v_{max} = v_n\ R_{max} \qquad \text{Eq. 18}$$

Maximum Gas Velocity for $R_{max} \geq 1.5$.

$$v_{max} = v_n \ (1.5) \qquad \text{Eq. 19}$$

Minimum Velocity Pressure.

$$\Delta p_{min} = 1.3686 \times 10^{-4} \left[\frac{P_s \ M_w}{T_s} \right] \left[\frac{v_{min}}{C_p} \right]^2 \qquad \text{Eq. 20}$$

Maximum Velocity Pressure.

$$\Delta p_{max} = 1.3686 \times 10^{-4} \left[\frac{P_s \ M_w}{T_s} \right] \left[\frac{v_{max}}{C_p} \right]^2 \qquad \text{Eq. 21}$$

Sampling Time at Point 1. N_{tp} is the total number of traverse points. You must use the preliminary velocity traverse data.

$$t_1 = \left[\frac{\sqrt{\Delta p_1}}{\left(\sqrt{\Delta p}\right)_{avg}} \right] \left[\frac{t_r}{N_{tp}} \right] \qquad \text{Eq. 22}$$

Sampling Time at Point n. You must use the actual test run data at each point, n, and test run point 1.

$$t_n = t_1 \frac{\sqrt{\Delta p_n}}{\sqrt{\Delta p_1}} \qquad \text{Eq. 23}$$

Adjusted Velocity Pressure.

$$\Delta p_s = \Delta p_m \left[\frac{C_p}{C_p} \right]^2 \qquad \text{Eq. 24}$$

Average Probe Blockage Factor.

$$b_f = \frac{12.0}{A} \qquad \text{Eq. 25}$$

Velocity Pressure.

$$\Delta p_s \ 2 = \Delta p_s \ 1 \left[\frac{1}{(1 - b_f)} \right]^2 \qquad \text{Eq. 26}$$

Dry Gas Volume Sampled at Standard Conditions.

$$v_{ms} = \left[\frac{528}{29.92} \right] [\gamma \ V_m] \left[\frac{\left(P_{bar} + \frac{\Delta H}{13.6} \right)}{T_m} \right] \qquad \text{Eq. 27}$$

Sample Flow Rate at Standard Conditions.

$$Q_{sST} = \frac{V_{ms}}{\theta} \qquad \text{Eq. 28}$$

Volume of Water Vapor.

$$V_{ws} = 0.04707 \ V_c \qquad \text{Eq. 29}$$

Moisture Content of Gas Stream.

$$B_{ws} = \left[\frac{V_{ws}}{V_{ms} + V_{ws}} \right] \qquad \text{Eq. 30}$$

Sampling Rate.

$$Q_s = \frac{29.92}{528} \ Q_{sST} \left[\frac{1}{(1 - B_{ws})} \right] \left[\frac{T_s}{P_s} \right] \qquad \text{Eq. 31}$$

[**Note:** The viscosity and Reynolds Number must be recalculated using the actual stack temperature, moisture, and oxygen content.

Actual Particle Cut Diameter for Cyclone I. This is based on actual temperatures and pressures measured during the test run.

$$D_{50} = 0.15625 \left[\frac{T_s}{M_w \; P_s}\right]^{0.2091} \left[\frac{\mu}{Q_s}\right]^{0.7091} \qquad \text{Eq. 32}$$

Particle Cut Diameter for N_{re} < 3,162 for Cyclone IV. C must be recalculated using the actual test run data and a D_{50} (D_p) of 2.5.

$$D_{50} = 0.0024302 \left[\frac{\mu}{Q_s}\right]^{1.1791} \left[\frac{1}{C}\right]^{0.5} \left[\frac{T_s}{P_s \; M_w}\right]^{0.6790} \qquad \text{Equation 33} \quad (N_{re} < 3162)$$

Particle Cut Diameter for N_{re} ≥ 3,162 for Cyclone IV. C must be recalculated using the actual test run data and a D_{50} (D_p) of 2.5.

$$D_{50} = 0.019723 \left[\frac{\mu}{Q_s}\right]^{0.8058} \left[\frac{1}{C}\right]^{0.5} \left[\frac{T_s}{P_s \; M_w}\right]^{0.3058} \qquad \text{Equation 34} \quad (N_{re} < 3162)$$

Re-estimated Cunningham Correction Factor. You must use the actual test run Reynolds Number (N_{re}) value and select the appropriate D_{50} from Equation 32 or 33 (or Equation 36 or 37 if reiterating).

$$C_r = 1 + 0.0057193 \left[\frac{\mu}{P_s \; D_{50}}\right] \left[\frac{T_s}{M_w}\right]^{0.5} \qquad \text{Eq. 35}$$

Re-calculated Particle Cut Diameter for N_{re} < 3,162.

$$D_{50-1} = 0.0024302 \left[\frac{\mu}{Q_s}\right]^{1.1791} \left[\frac{1}{C_r}\right]^{0.5} \left[\frac{T_s}{P_s \; M_w}\right]^{0.6790} \qquad \text{Equation 36} \quad (N_{re} < 3162)$$

Re-calculated Particle Cut Diameter for N ≥ 3,162.

$$D_{50-1} = 0.019723 \left[\frac{\mu}{Q_s}\right]^{0.8058} \left[\frac{1}{C_r}\right]^{0.5} \left[\frac{T_s}{P_s \; M_w}\right]^{0.3058} \qquad \text{Equation 37} \quad (N_{re} < 3162)$$

Ratio (Z) Between D_{50} and D_{50-1} Values.

$$Z = \frac{D_{50-1}}{D_{50}} \qquad \text{Eq. 38}$$

Acceptance Criteria for Z Values. The number of iterative steps is represented by N.

$$0.99 \le \left[Z = \left(\frac{D_{50_N}}{D_{50_{N+1}}}\right)\right] \le 1.01 \qquad \text{Eq. 39}$$

Percent Isokinetic Sampling.

$$I = \left(\frac{100\ T_s\ V_{ms}\ 29.92}{60\ v_s\ ,\ A_n\ P_s\ (1 - B_{ws})\ 528} \right) \qquad \text{Eq. 40}$$

Acetone Blank Concentration.

$$C_a = \frac{m_a}{V_a\ \rho_a} \qquad \text{Eq. 41}$$

Acetone Blank Weight.

$$W_a = C_a\ V_{aw}\ \rho_a \qquad \text{Eq. 42}$$

Concentration of Total Filterable Particulate Matter.

$$C_{t\,f} = \left(\frac{7000}{453{,}592} \right) \left[\frac{M_1 + M_2 + M_3 + M_4}{V_{ms}} \right] \qquad \text{Eq. 43}$$

Concentration of Filterable PM_{10} Particulate Matter.

$$C_{fPM\,10} = \left(\frac{7000}{453{,}592} \right) \left[\frac{M_1 + M_3 + M_4}{V_{ms}} \right] \qquad \text{Eq. 44}$$

Concentration of Filterable $PM_{2.5}$ Particulate Matter.

$$C_{fPM\,2.5} = \left(\frac{7000}{453{,}592} \right) \left[\frac{M_1 + M_4}{V_{ms}} \right] \qquad \text{Eq. 45}$$

13.0 Method Performance

(a) Field evaluation of PM_{10} and total particulate matter showed that the precision of constant sampling rate method was the same magnitude as Method 17 (approximately 5 percent). Precision in PM_{10} and PM_{10} fraction between multiple trains showed standard deviations of 2 to 4 percent and total mass compared to 4.7 percent observed for Method 17 in simultaneous test runs at a Portland cement clinker cooler exhaust. The accuracy of the constant sampling rate PM_{10} method for total mass, referenced to Method 17, was -2 ± 4.4 percent. A small bias was found between Method 201A and Method 17 total particulate matter (10%) (Farthing, 1988).

(b) Laboratory evaluation and guidance for PM_{10} cyclones were designed to limit error due to spatial variations to 10 percent. The maximum allowable error due to anisokinetic sampling was limited to ±20 percent for 10 μm particles in laboratory tests (Farthing, 1988b).

14.0 Pollution Prevention

[Reserved]

15.0 Waste Management

[Reserved]

16.0 References

We used the following references to develop this test method:

1. Dawes, S.S., and W.E. Farthing. ''Application Guide for Measurement of $PM_{2.5}$ at Stationary Sources,'' U.S. Environmental Protection Agency, Atmospheric Research and Exposure Assessment Laboratory, Research Triangle Park, NC 27511, EPA–600/3–90/057 (NTIS No.: PB 90–247198), November 1990.

2. U.S. Environmental Protection Agency, Federal Reference Methods 1 through 5 and Method 17, 40 CFR 60, Appendix A.

3. Richards, J.R. ''Test protocol: PCA PM_{10}/$PM_{2.5}$ Emission Factor Chemical Characterization Testing,'' PCA R&D Serial No. 2081, Portland Cement Association, 1996.

4. Farthing and Co-workers, 1988a ''PM_{10} Source Measurement Methodology: Field Studies,'' EPA 600/3–88/055, NTIS PB89–194287/AS, U.S. Environmental Protection Agency, Research Triangle Park, NC 27711.

5. Farthing and Dawes, 1988b ''Application Guide for Source PM_{10} Measurement with Constant Sampling Rate,'' EPA/600/3–88–057, U.S. Environmental Protection Agency, Research Triangle Park, NC 27711.

17.0 Tables, Diagrams, Flowcharts, and Validation Data

You must use the following tables, diagrams, flowcharts, and data to complete this test method successfully.

TABLE 1—TYPICAL PARTICULATE MATTER CONCENTRATIONS

Particle size range	Concentration and % by weight
Total collectable particulate	0.015 gr/DSCF.
≤ 10 and > 2.5 micrometers	40% of total collectable particulate matter.
≤ 2.5 micrometers	20% of total collectable particulate matter.

TABLE 2—REQUIRED CYCLONE CUT DIAMETERS (D_{50})

Cyclone	Min. cut diameter (Micrometer)	Max. cut diameter (Micrometer)
PM_{10} Cyclone (Cyclone I from five stage cyclone)	9	11
$PM_{2.5}$ Cyclone (Cyclone IV from five stage cyclone)	2.25	2.75

TABLE 3—PRETEST CALCULATIONS

If you are using . . .	To calculate . . .	Then use . . .
Preliminary data	dry gas molecular weight, M_d	Equation 1.
Dry gas molecular weight (M_d) and preliminary moisture content of the gas stream.	wet gas molecular weight, M_W	Equation 2 [a].
Stack gas temperature, and oxygen and moisture content of the gas stream.	gas viscosity, μ	Equation 3.
Gas viscosity, μ	Cunningham correction factor [b], C	Equation 4.
Reynolds Number [c] (N_{re})	preliminary lower limit cut diameter for cyclone I, D_{50LL}	Equation 5.
$N_{re} < 3{,}162$		
D_{50LL} from Equation 5	cut diameter for cyclone I for middle of the overlap zone, D_{50T}.	Equation 6.
D_{50T} from Equation 6	final sampling rate for cyclone I, $Q_I(Q_s)$	Equation 7.
$Q_I(Q_s)$ from Equation 7	(verify) the assumed Reynolds number	Equation 8.

[a] Use Method 4 to determine the moisture content of the stack gas. Use a wet bulb-dry bulb measurement device or hand-held hygrometer to estimate moisture content of sources with gas temperature less than 160 °F.
[b] For the lower cut diameter of cyclone IV, 2.25 micrometer.
[c] Verify the assumed Reynolds number using the procedure in Section 8.5.1, before proceeding to Equation 9.

TABLE 4—ΔH VALUES BASED ON PRELIMINARY TRAVERSE DATA

Stack temperature (°R)	$T_s - 50°$	T_s	$T_s + 50°$
ΔH, (in. W.C.)	–	–	–

TABLE 5—VERIFICATION OF THE ASSUMED REYNOLDS NUMBER

If the N_{re} is . . .	Then . . .	And . . .
< 3,162	Calculate ΔH for the meter box.	
≥ 3,162	Recalculate D_{50LL} using Equation 10	Substitute the "new" D_{50LL} into Equation 6 to recalculate D_{50T}.

TABLE 6—CALCULATIONS FOR RECOVERY OF PM_{10} AND $PM_{2.5}$

Calculations	Instructions and references
Average dry gas meter temperature	See field test data sheet.
Average orifice pressure drop	See field test data sheet.
Dry gas volume (V_{ms})	Use Equation 27 to correct the sample volume measured by the dry gas meter to standard conditions (20 °C,760 mm Hg or 68 °F, 29.92 in. Hg).
Dry gas sampling rate (Q_{sST})	Must be calculated using Equation 28.
Volume of water condensed (V_{ws})	Use Equation 29 to determine the water condensed in the impingers and silica gel combination. Determine the total moisture catch by measuring the change in volume or weight in the impingers and weighing the silica gel.
Moisture content of gas stream (B_{ws})	Calculate this with Equation 30.
Sampling rate (Q_s)	Calculate this with Equation 31.
Test condition Reynolds number[a]	Use Equation 8 to calculate the actual Reynolds number during test conditions.
Actual D_{50} of Cyclone I	Calculate this with Equation 32. This calculation is based on the average temperatures and pressures measured during the test run.
Stack gas velocity (v_s)	Calculate this with Equation 11.
Percent isokinetic rate (%I)	Calculate this with Equation 40.

[a] Calculate the Reynolds number at the cyclone IV inlet during the test based on: (1) The sampling rate for the combined cyclone head, (2) the actual gas viscosity for the test, and (3) the dry and wet gas stream molecular weights.

124

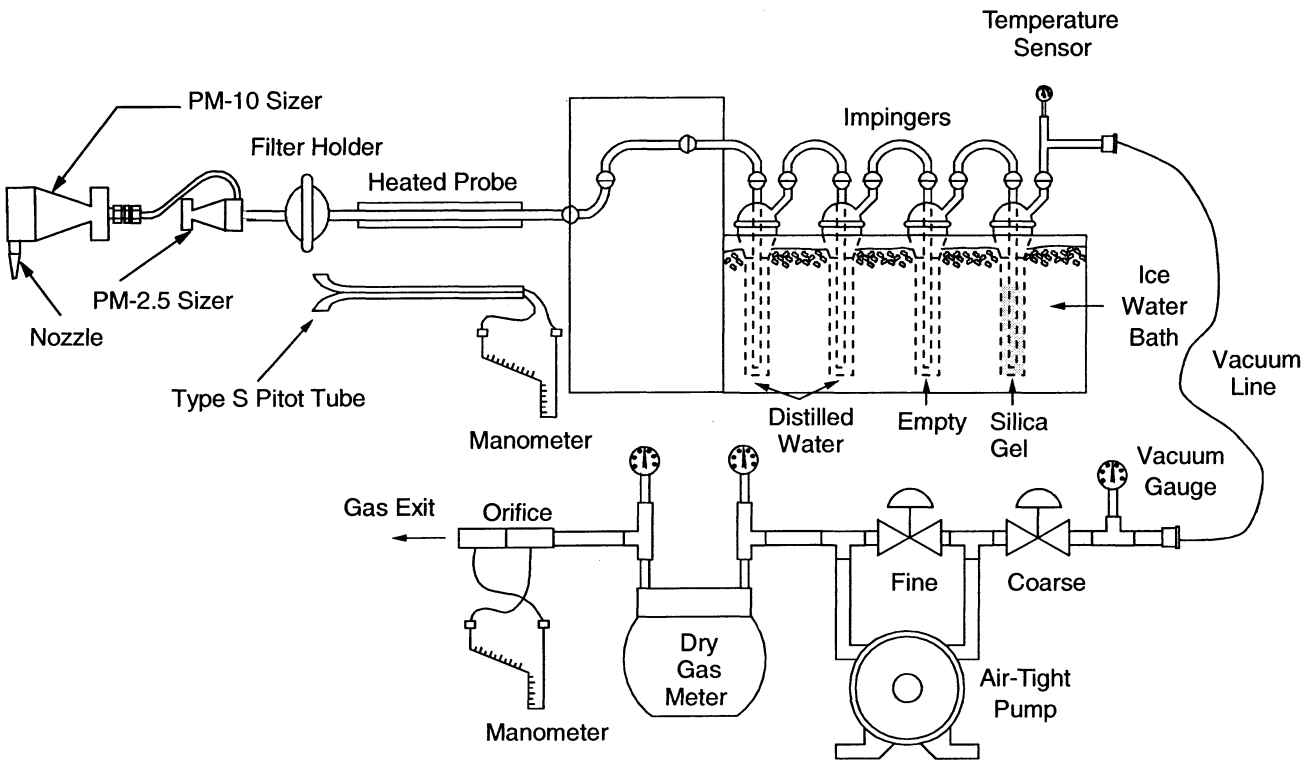

Figure 1. In-stack PM_{10} and $PM_{2.5}$ Sampling Train

125

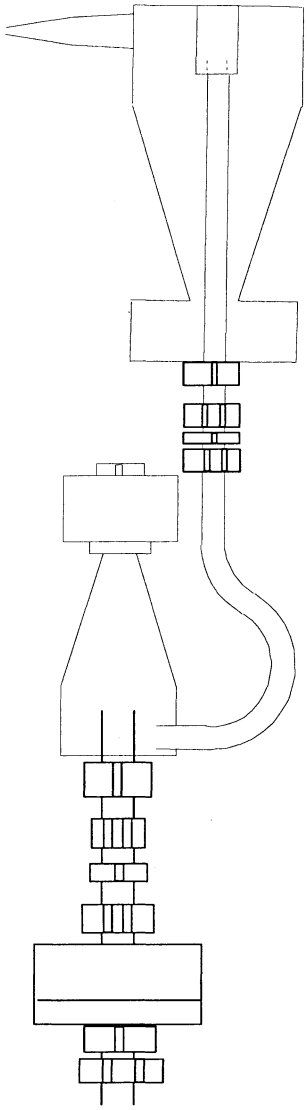

Figure 2. Combined Cyclone Sampling Head

126

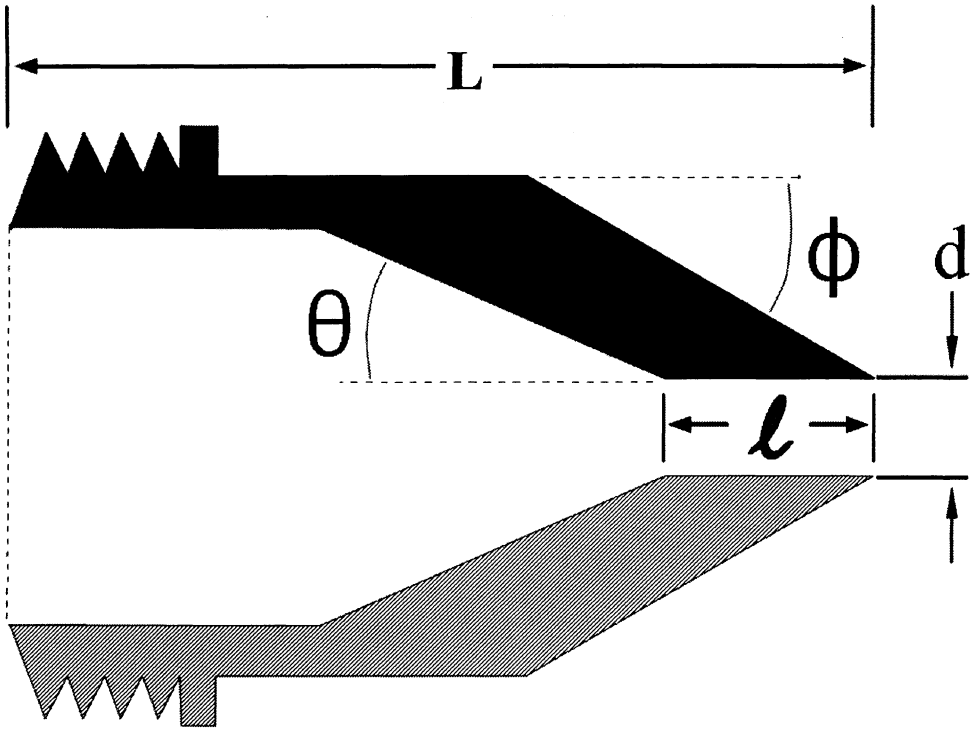

Nozzle Diameter, d (inches)	Cone Angle, θ (degrees)	Outside Taper, Φ (degrees)	Straight Inlet Length, l inches)	Total Length, L (inches)
0.125	4	15	<0.05	2.710±0.05
0.136	4	15	<0.05	2.653±0.05
0.150	4	15	<0.05	2.553±0.05
0.164	5	15	<0.05	1.970±0.05
0.180	6	15	<0.05	1.572±0.05
0.197	6	15	<0.05	1.491±0.05
0.215	6	15	<0.05	1.450±0.05
0.233	6	15	<0.05	1.450±0.05
0.264	5	15	<0.05	1.450±0.05
0.300	4	15	<0.05	1.480±0.05
0.342	4	15	<0.05	1.450±0.05
0.390	3	15	<0.05	1.450±0.05

Figure 3. Nozzle Design Specifications for PM_{10} Cyclone

127

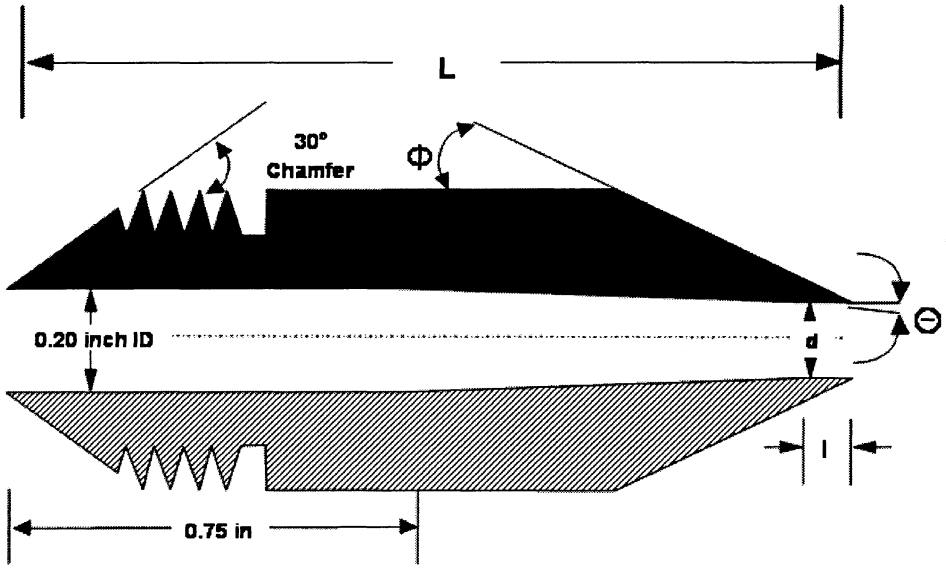

Nozzle Diameter, d (in.)	Internal Cone Angle, θ (degrees)	Outside Taper, Φ (degrees)	Straight Inlet Length, l (in.)	Total Length, L (in.)
0.125	3	15	≤ 0.05	1.45 ± 0.05
0.138	2	15	≤ 0.05	1.45 ± 0.05
0.156	1	15	≤ 0.05	1.45 ± 0.05
0.172	1	15	≤ 0.05	1.45 ± 0.05
0.188	1	15	≤ 0.05	1.45 ± 0.05
0.200	0	15	≤ 0.05	1.45 ± 0.05

Figure 4A. Nozzle Design for $PM_{2.5}$ Cyclone (Higher Stack Flow)

128

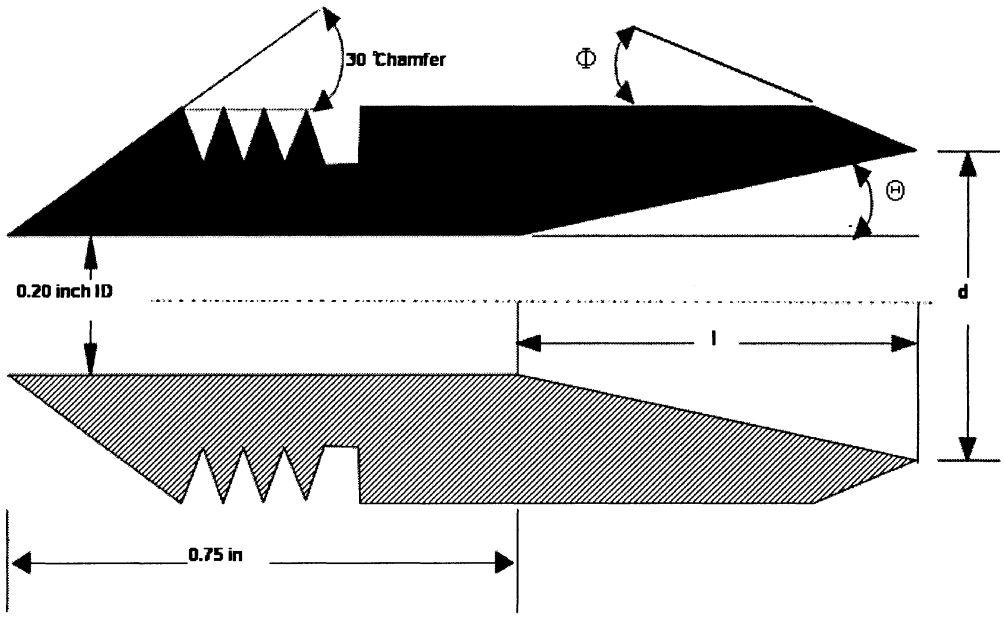

Nozzle diameter, d (inches)	Cone Angle, θ (degrees)	Outside taper, Φ (degrees)	Internal Taper length, l (inches)
0.216	5	15	0.093
0.234	5	15	0.194
0.253	5	15	0.304
0.274	5	15	0.422
0.296	5	15	0.549
0.320	5	15	0.688

Figure 4B. Nozzle Design for $PM_{2.5}$ Cyclone (Lower Stack Flow)

129

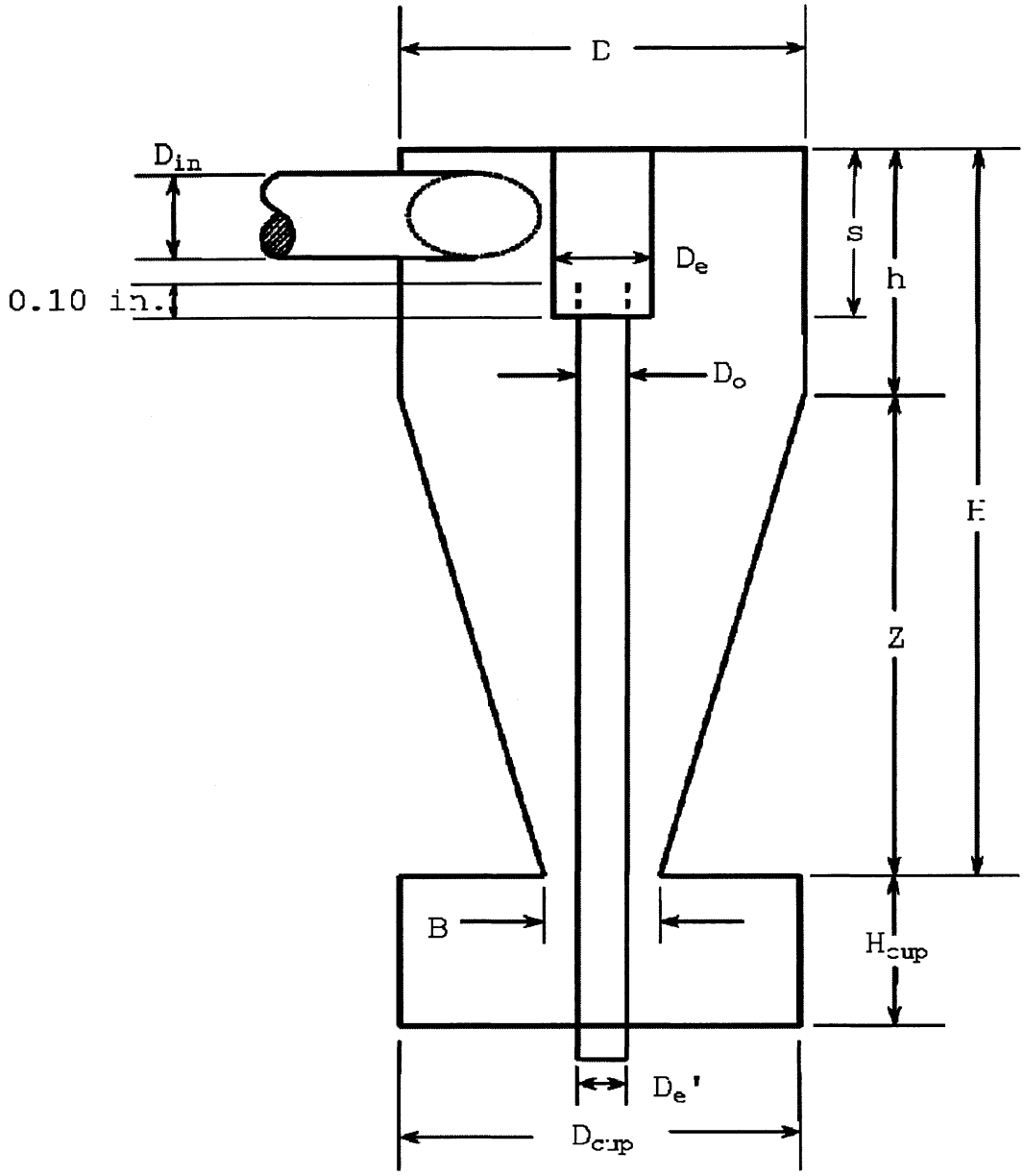

Cyclone I (10 Micrometer)	Cyclone Interior Dimensions (cm ± 0.02 cm)											
	D_{in}	D	D_e	B	H	h	Z	S	H_{cup}	D_{cup}	D_e'	D_o
	1.27	4.47	1.50	1.88	6.95	2.24	4.71	1.57	2.25	4.45	1.02	1.24

Figure 5. Design Specifications for Cyclone I (10 Micrometer)

130

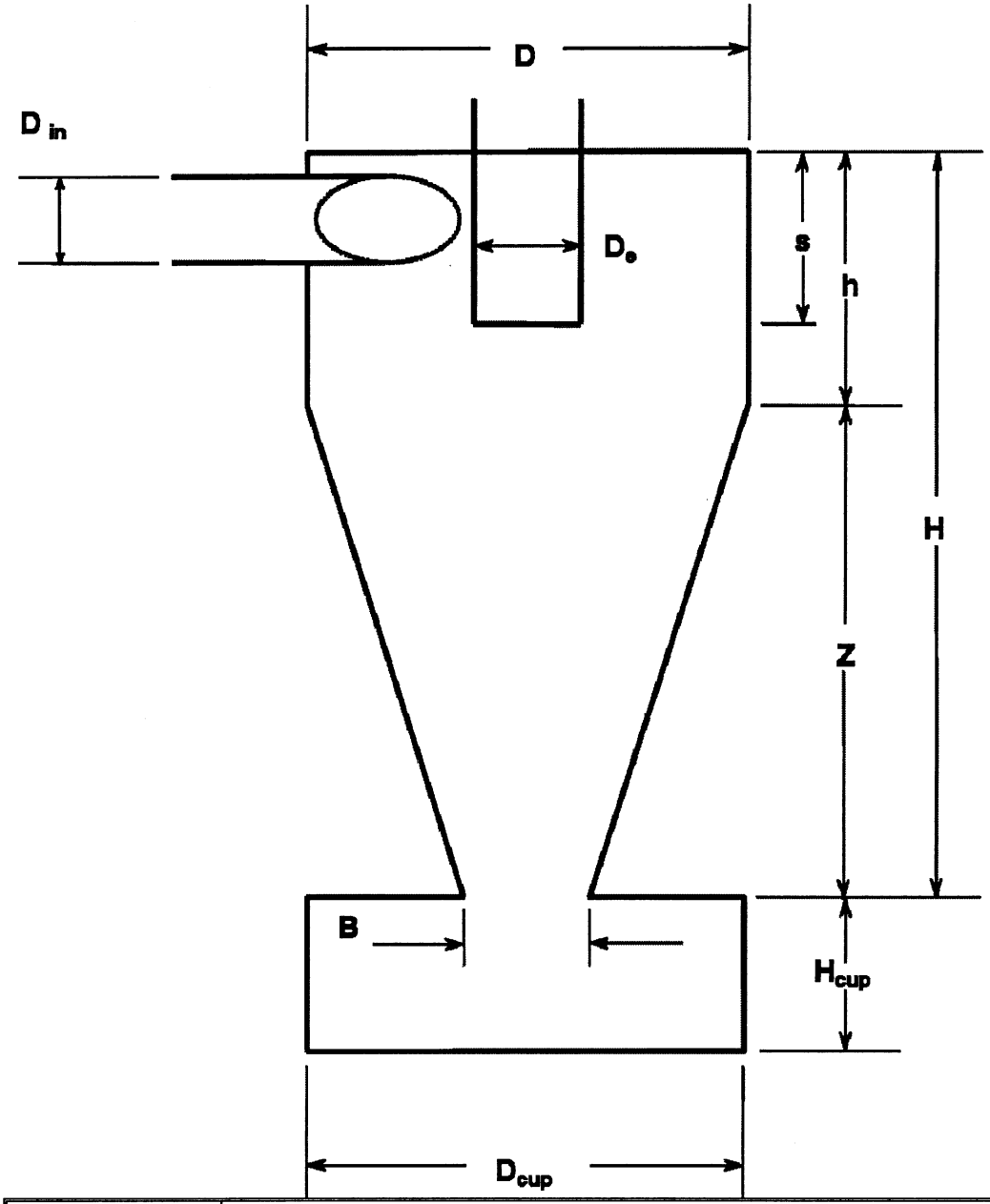

Cyclone IV (2.5 Micrometer)	Cyclone Interior Dimensions (cm ± 0.02 cm)									
	D_{in}	D	De	B	H	h	Z	S	H_{cup}	D_{cup}
	0.51	2.54	0.59	1.09	2.68	1.03	1.65	0.58	2.22	2.62

Figure 6. Design Specifications for Cyclone IV (2.5 Micrometer) Sizing Device

131

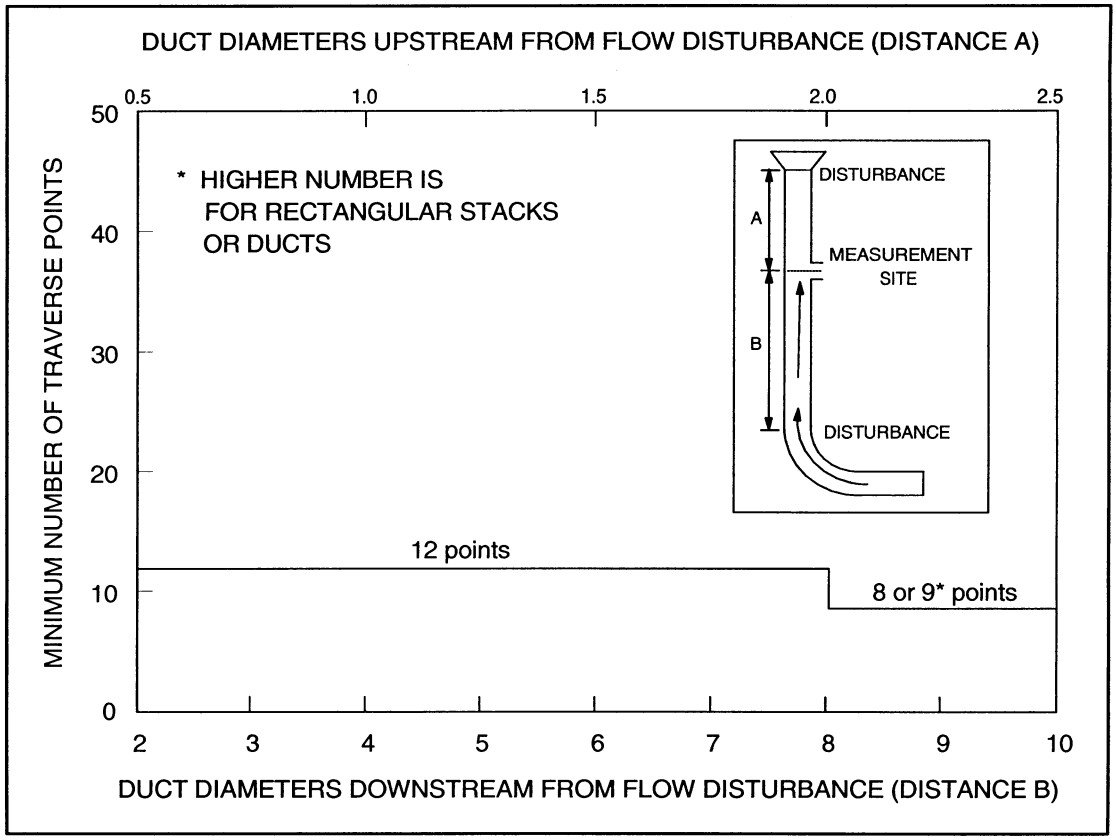

Figure 7. Minimum Number of Traverse Points for Preliminary Method 4 Traverse

132

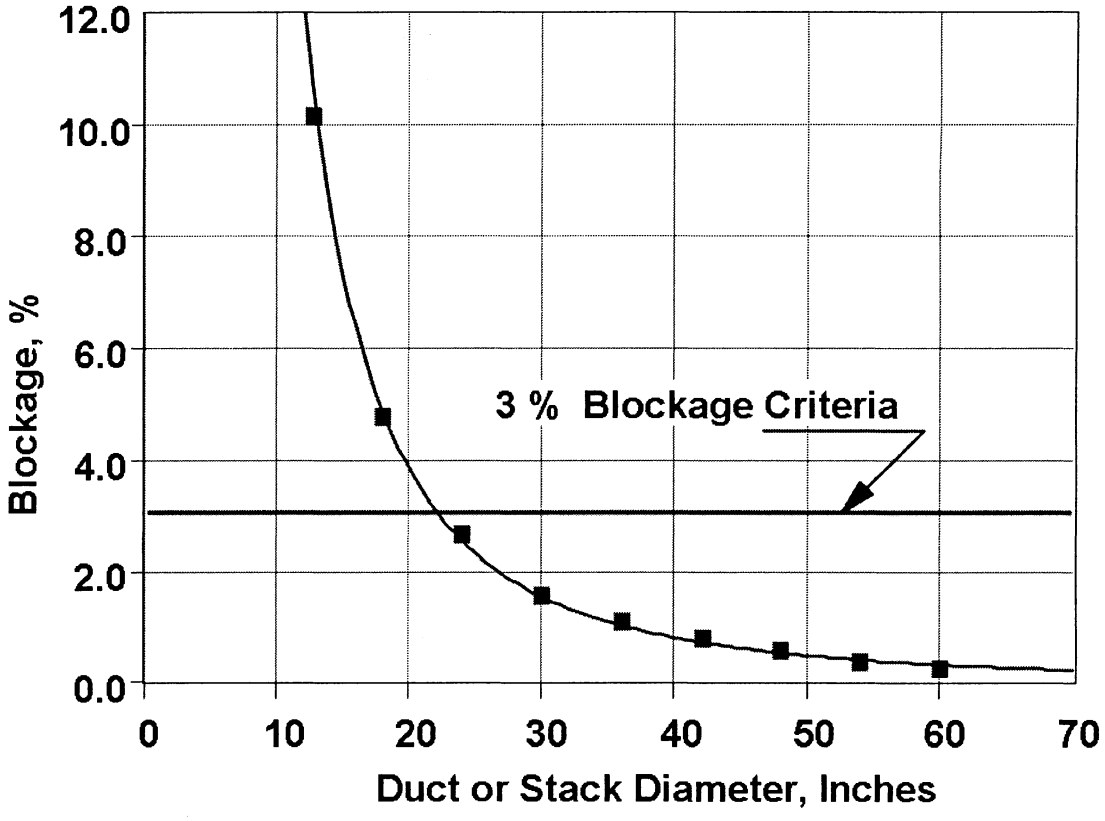

Figure 8. Gas Flow Blockage by the Combined Cyclone Sampling Head

133

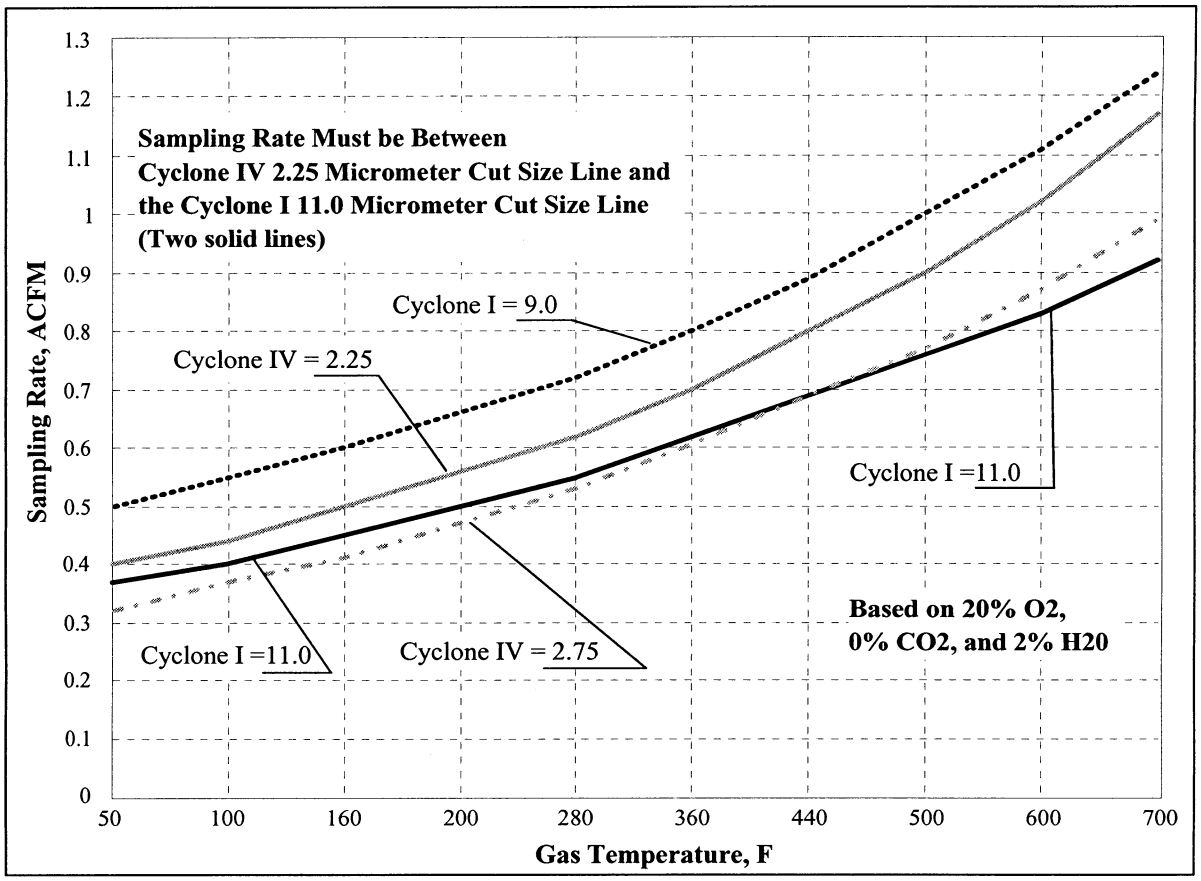

Figure 9. Acceptable Sampling Rate for Combined Cyclone Heads

BILLING CODE 6560–50–C

METHOD 202—DRY IMPINGER METHOD FOR DETERMINING CONDENSABLE PARTICULATE EMISSIONS FROM STATIONARY SOURCES

1.0 Scope and Applicability

1.1 Scope. The U.S. Environmental Protection Agency (U.S. EPA or ''we'') developed this method to describe the procedures that the stack tester (''you'') must follow to measure condensable particulate matter (CPM) emissions from stationary sources. This method includes procedures for measuring both organic and inorganic CPM.

1.2 Applicability. You can use this method to measure CPM from stationary source emissions after filterable particulate matter has been removed. CPM is measured in the emissions after removal from the stack and after passing through a filter. You can use Method 17 to collect condensable and filterable particulate material from sources operating at stack temperatures and/or samples collected below 30 °C (85 °F) if the filter is treated as described in Sections 8.5.4.4 and 11.2.1 of this method. You may use this method only for stationary source emission measurements.

1.3 Responsibility. You are responsible for obtaining the equipment and supplies you will need to use this method. You must also develop your own procedures for following this method and any additional procedures to ensure accurate sampling and analytical measurements.

1.4 Results. To obtain reliable results, you must have a thorough knowledge of the following test methods that are found in Appendices A–1 through A–3 and A–6 to Part 60, and in Appendix M to Part 51:

(a) Method 1—Sample and Velocity Traverses for Stationary Sources.

(b) Method 2—Determination of Stack Gas Velocity and Volumetric Flow Rate (Type S Pitot Tube).

(c) Method 3—Gas Analysis for the Determination of Dry Molecular Weight.

(d) Method 4—Determination of Moisture Content in Stack Gases.

(e) Method 5—Determination of Particulate Matter Emissions from Stationary Sources.

(f) Method 17—Determination of Particulate Matter Emissions from Stationary Sources (in-stack filtration method).

(g) Method 201A—Determination of PM_{10} and $PM_{2.5}$ Emissions from Stationary Sources (Constant Sampling Rate Procedure)

1.5 Additional Methods. You will need additional test methods to measure filterable particulate matter. You may use this method to collect CPM in conjunction with Method 5 or 17 of Appendices A–1 through A–3 and A–6 to Part 60 or, Method 201A of Appendix M to Part 51. The sample train operation and front end recovery and analysis are conducted according to the filterable particulate method you choose. This method addresses the equipment, preparation, and analysis necessary to measure only CPM.

1.6 Limitations. You can use this method to measure emissions following a wet scrubber only when this method is combined with a filterable particulate method that operates at high enough temperatures to cause water droplets sampled through the probe to become gaseous.

1.7 Conditions. You must maintain isokinetic sampling conditions to meet the requirements of the filterable particulate method used in conjunction with this method. You must sample at the required number of sampling points specified in Method 5, 17, or 201A. Also, if you are using this method as an alternative to a required performance test method, you must receive approval from the appropriate authorities prior to conducting the test.

2.0 Summary of Method

2.1 Summary. The CPM is collected in dry impingers after filterable particulate material has been collected on filters maintained above 30 °C (85 °F) using Method 5, 17, or 201A. The organic and aqueous fractions of the impingers and an out-of-stack CPM filter are then taken to dryness and weighed. The total of all fractions represents the CPM. Compared to the December 17, 1991 promulgated Method 202, this method removes water from the impingers and includes the addition of a condenser followed by a water dropout impinger immediately after the final in-stack or heated filter. This method also includes the addition of one modified Greenburg Smith impinger and a CPM filter following the water dropout impinger. Figure 1 of Section 18 presents the schematic of the sampling train configured with these changes.

2.1.1 Condensable Particulate Matter. CPM is collected in the water dropout impinger, the modified Greenburg Smith impinger, and the CPM filter of the sampling train as described in this method. The impinger contents are purged with nitrogen (N_2) immediately after sample collection to remove dissolved sulfur dioxide (SO_2) gases from the impinger. The CPM filter is extracted with water and methylene chloride. The impinger solution is then extracted with methylene chloride ($MeCl_2$). The organic and aqueous fractions are dried and the residues are weighed. The total of the aqueous and organic fractions represents the CPM.

2.1.2 Dry Impinger and Additional Filter. The potential artifacts from SO_2 are reduced using a condenser and dropout impinger to separate CPM from reactive gases. No water is added to the impingers prior to the start of sampling. To improve the collection efficiency of CPM, an additional filter (the CPM filter) is placed between the second and third impingers.

3.0 Definitions

3.1 Primary PM. Primary PM (also known as direct PM) means particles that enter the atmosphere as a direct emission from a stack or an open source. Primary PM comprises two components: filterable PM and condensable PM. These two PM components have no upper particle size limit.

3.2 Filterable PM. Filterable PM means particles that are emitted directly by a source as a solid or liquid at stack or release conditions and captured on the filter of a stack test train.

3.3 Primary PM_{10}. Primary PM_{10} (also known as direct PM_{10}, total PM_{10}, PM_{10} or filterable PM_{10}, and condensable PM, individually) means particulate matter with an aerodynamic diameter equal to or less than 10 micrometers.

3.4 Primary $PM_{2.5}$. Primary $PM_{2.5}$ (also known as direct $PM_{2.5}$, total $PM_{2.5}$, $PM_{2.5}$, or filterable $PM_{2.5}$, and condensable PM, individually) means solid particles emitted directly from an air emissions source or activity, or gaseous emissions or liquid droplets from an air emissions source or activity that condense to form particulate matter at ambient temperatures. Direct $PM_{2.5}$ emissions include elemental carbon, directly emitted organic carbon, directly emitted sulfate, directly emitted nitrate, and other inorganic particles (including but not limited to crustal material, metals, and sea salt).

3.5 Condensable PM (CPM). Condensable PM means material that is vapor phase at stack conditions, but which condenses and/or reacts upon cooling and dilution in the ambient air to form solid or liquid PM immediately after discharge from the stack. Note that all condensable PM is assumed to be in the $PM_{2.5}$ size fraction (Reference: Part 51, Subpart Z (51.1000)).

4.0 Interferences [Reserved]

5.0 Safety

Disclaimer: You may have to use hazardous materials, operations, and equipment while performing this method. We do not provide information on appropriate safety and health practices. You are responsible for determining the applicability of regulatory limitations and establishing appropriate safety and health practices. Handle materials and equipment properly.

6.0 Equipment and Supplies

The equipment used in the filterable particulate portion of the sampling train is described in Methods 5 and 17 of Appendix A–1 through A–3 and A–6 to Part 60 and Method 201A in Appendix M to Part 51. The equipment used in the CPM portion of the train is described in this section.

6.1 Condensable Particulate Sampling Train Components. The sampling train for this method is consistent with the sampling train for collecting filterable particulate using Method 5, 17, or 201A with the following exceptions or additions:

6.1.1 Condenser and Impingers. You must add the following components to the filterable particulate sampling train: A Method 23 type condenser as described in Section 2.1.2 of Method 23 of Appendix A–8 to Part 60, followed by a dropout impinger or flask, followed by a modified Greenburg-Smith impinger with an open tube tip as described in Section 6.1.1.8 of Method 5.

6.1.2 CPM Filter Holder. The modified Greenburg-Smith impinger is followed by a filter holder that is either glass, stainless steel (316 or equivalent), or Teflon®-coated stainless steel. Commercial size filter holders are available depending on project requirements. Use a commercial filter holder capable of supporting 47 mm or greater diameter filters. Commercial size filter holders contain a Teflon® O-ring, stainless steel, ceramic or Teflon® filter support and a final Teflon® O-ring. At the exit of the CPM filter, install a Teflon®-coated or stainless steel encased thermocouple that is in contact with the gas stream.

6.1.3 Long Stem Impinger Insert. You will need a long stem modified Greenburg Smith

impinger insert for the dropout impinger to perform the nitrogen purge of the sampling train.

6.2 Sample Recovery Equipment.

6.2.1 Condensable Particulate Matter Recovery.

6.2.1.1 Nitrogen Purge Line. You must use inert tubing and fittings capable of delivering at least 20 liters/min of nitrogen gas to the impinger train from a standard gas cylinder (see Figure 2 of Section 18). You may use standard 0.6 cm (1/4-in.) tubing and compression fittings in conjunction with an adjustable pressure regulator and needle valve.

6.2.1.2 Rotameter. You must use a rotameter capable of measuring gas flow up to 20 L/min. The rotameter must be accurate to 5 percent of full scale.

6.2.1.3 Ultra-high Purity (UHP) Nitrogen Gas. Compressed ultra-pure nitrogen, regulator, and filter must be capable of providing at least 20 L/min purge gas for 1 hour through the sampling train.

6.3 Analysis. The following equipment is necessary for CPM sample recovery and analysis:

6.3.1 Separatory Funnel. Glass, 1 liter.

6.3.2 Weighing Tins. 50 mL.

6.3.3 Glass Beakers. 300 to 500 mL.

6.3.4 Drying Equipment. Hot plate or oven with temperature control.

6.3.5 Pipets. 5 mL.

6.3.6 Burette. Glass, 0 to 100 mL in 0.1 mL graduations.

6.3.7 Analytical Balance. Analytical balance capable of weighing 0.0001 g (0.1 milligram). For extremely low emission sources, a balance capable of weighing 0.00001 g (0.01 milligram) may be required.

6.3.8 pH Meter. A meter capable of determining the acidity of liquid within 0.1 pH units.

7.0 Reagents and Standards

7.1 Sample Collection. To collect a sample, you will need a Teflon® filter, crushed ice, and silica gel. You must also have water and nitrogen gas to purge the sampling train. You will find additional information on each of these items in the following summaries.

7.1.1 Filter. You must use a Teflon® membrane filter that does not have an organic binder. The filter must also have an efficiency of at least 99.95 percent (<0.05 percent penetration) on 0.3 micron particles. You may use test data from the supplier's quality control program to document filter efficiency. If the source you are sampling has SO_2 or sulfur trioxide (SO_3) emissions, then you must use a filter that will not react with SO_2 or SO_3. Depending on your application and project data quality objectives (DQOs), filters are commercially available in 47 mm and larger sizes.

7.1.2 Silica Gel. Use an indicating-type silica gel of 6 to 16 mesh. We must approve other types of desiccants (equivalent or better) before you use them. Allow the silica gel to dry for 2 hours at 175 °C (350 °F) if it is being reused. You do not have to dry new silica gel.

7.1.3 Water. Use deionized distilled ultra-filtered water (to conform to ASTM D1193–06, Type 1 water or equivalent) (incorporated by reference) to recover material caught in the impinger, if required. The Director of the Federal Register approves this incorporation by reference in accordance with 5 U.S.C. 552(a) and 1 CFR part 51. You may obtain a copy from American Society for Testing and Materials (ASTM), 100 Barr Harbor Drive, Post Office Box C700, West Conshohocken, PA 19428–2959. You may inspect a copy at the Office of **Federal Register**, 800 North Capitol Street, NW., Suite 700, Washington, DC.

7.1.4 Crushed Ice. Obtain from the best readily available source.

7.1.5 Nitrogen Gas. Use Ultra-High Purity (UHP) compressed nitrogen or equivalent to purge the sampling train. The compressed nitrogen you use to purge the sampling train must contain no more than 1 ppm oxygen, 1 ppm total hydrocarbons as carbon, and 2 ppm moisture.

7.2 Sample Recovery and Analytical Reagents. You will need acetone, $MeCl_2$, anhydrous sodium sulfate, ammonia hydroxide (NH_4OH), and deionized water for the sample recovery and analysis. Unless otherwise indicated, all reagents must conform to the specifications established by the Committee on Analytical Reagents of the American Chemical Society. If such specifications are not available, then use the best available grade. Find additional information on each of these items in the following paragraphs:

7.2.1 Acetone. Use acetone that is stored in a glass bottle. Do not use acetone from a metal container because it normally produces a high residue blank. You must use acetone with blank values <1 ppm, by weight, residue.

7.2.2 Methylene Chloride, American Chemical Society (ACS) grade. You must use methylene chloride with a blank value <1.5 ppm, by weight, residue.

7.2.3 Water. Use deionized distilled ultra-filtered water (to conform to ASTM D1193–06, Type 1 or equivalent) (incorporated by reference) to recover material caught in the impinger.

7.2.4 Condensable Particulate Sample Desiccant. Use indicating-type anhydrous sodium sulfate to desiccate water and organic extract residue samples.

7.2.5 Ammonium Hydroxide. Use NIST traceable or equivalent (0.1 N) NH_4OH.

7.2.6 Standard Buffer Solutions. Use one buffer with a neutral pH and a second buffer solution with an acid pH.

8.0 Sample Collection, Preservation, Storage, and Transport

8.1 Qualifications. This is a complex test method. To obtain reliable results, you must be trained and experienced with in-stack filtration systems (such as, cyclones, impactors, and thimbles) and impinger and moisture train systems.

8.2 Preparations. You must clean glassware prior to field tests as described in Section 8.4, including baking glassware at 300 °C for 6 hours prior to use. Cleaned, baked glassware is used at the start of each new source category tested. Analyze reagent blanks (water, acetone, and methylene chloride) before field tests to verify low blank concentrations. Follow the pretest preparation instructions in Section 8.1 of Method 5.

8.3 Site Setup. You must follow the procedures required by filterable particulate sampling method setup run in conjunction with this method including:

(a) Determining the sampling site location and traverse points.

(b) Calculating probe/cyclone blockage.

(c) Verifying the absence of cyclonic flow.

(d) Completing a preliminary velocity profile, and selecting a nozzle(s).

8.3.1 Sampling Site Location and Traverse Point. Determination. Follow the standard procedures in Method 1 of Appendix A–1 to Part 60 to select the appropriate sampling site. Then you must do all of the following:

8.3.1.1 Sampling site. Choose a location that maximizes the distance from upstream and downstream flow disturbances.

8.3.1.2 Traverse points. Use the recommended maximum number of traverse points at any location, as found in Methods 5, 17, or 201A, whichever is applicable to your test requirements. You must prevent the disturbance and capture of any solids accumulated on the inner wall surfaces by maintaining a 1-inch distance from the stack wall (½ inch for sampling locations less than 24 inches in diameter).

8.4 Sampling Train Preparation. A schematic of the sampling train used in this method is shown in Figure 1 of Section 18. All sampling train glassware must be cleaned prior to the test with soap and water, and rinsed using tap water, deionized water, acetone, and finally, $MeCl_2$. It is important to completely remove all silicone grease from areas that will be exposed to the $MeCl_2$ rinse during sample recovery. After cleaning, you must bake glassware at 300 °C for 6 hours prior to each source type sampled. Prior to each sampling run, the train glassware used to collect condensable particulate matter must be rinsed thoroughly with deionized, distilled ultra-filtered water that conforms to ASTM D1193–06, Type 1 or equivalent (incorporated by reference).

8.4.1 Condenser and Dropout Impinger. Add a Method 23 type condenser and a condensate dropout impinger without bubbler tube after the final in-stack or out-of-stack hot filter assembly. The Method 23 type stack gas condenser is described in Section 2.1.2 of Method 23. It must be capable of cooling the stack gas to less than 30 °C (85 °F).

8.4.2 Backup Impinger. The dropout impinger is followed by a modified Greenburg Smith impinger with no taper (see Figure 1 of Section 18). Place the dropout and other impingers in an insulated box with water at ≤ 30 °C (≤ 85 °F). At the start of the tests, the water dropout and backup impinger must be clean, without any water or reagent added.

8.4.3 CPM Filter. Place a filter holder with a filter meeting the requirements in Section 6.1.2 following the modified Greenburg-Smith impinger. The connection between the CPM filter and the moisture trap impinger includes a thermocouple fitting that provides a leak-free seal between the thermocouple and the stack gas.

[**Note:** A thermocouple well is not sufficient for this purpose because the

Teflon® or steel encased thermocouple must be in contact with the sample gas).]

8.4.4 Moisture Traps. You must use a modified Greenburg-Smith impinger containing 100 mL of water or the alternative described in Method 5 followed by an impinger containing silica gel to collect moisture that passes through the CPM filter. You must maintain the gas temperature below 20°C (68 °F) at the exit of the moisture traps.

8.4.5 Silica Gel Trap. Place 200 to 300 g of silica gel in each of several air-tight containers. Weigh each container, including silica gel, to the nearest 0.5 g, and record this weight on the filterable particulate data sheet. As an alternative, the silica gel need not be preweighed, but may be weighed directly in its impinger or sampling holder just prior to train assembly.

8.4.6 Leak-Check (Pretest). Use the procedures outlined in Method 5, 17, or 201A as appropriate to leak check the entire sampling system. Specifically, perform the following procedures:

8.4.6.1 Sampling Train. You must pretest the entire sampling train for leaks. The pretest leak-check must have a leak rate of not more than 0.02 actual cubic feet per minute (ACFM) or 4 percent of the average sample flow during the test run, whichever is less. Additionally, you must conduct the leak-check at a vacuum equal to or greater than the vacuum anticipated during the test run. Enter the leak-check results on the field test data sheet for the filterable particulate method.

(**Note:** Conduct leak-checks during port changes only as allowed by the filterable particulate method used with this method).

8.4.6.2 Pitot Tube Assembly. After you leak-check the sample train, perform a leak-check of the pitot tube assembly. Follow the procedures outlined in Section 8.4.1 of Method 5.

8.5 Sampling Train Operation. Operate the sampling train as described in the filterable particulate sampling method (*i.e.*, Method 5, 17, or 201A) with the following additions or exceptions:

8.5.1 CPM Filter Assembly. On the field data sheet for the filterable particulate method, record the CPM filter temperature readings at the beginning of each sample time increment and when sampling is halted. Maintain the CPM filter ≤30 °C (≤85 °F) during sample collection.

8.5.2 Leak-Check Probe/Sample Train Assembly (Post-Test). Conduct the leak rate check according to the filterable particulate sampling method used during sampling. If required, conduct the leak-check at a vacuum equal to or greater than the maximum vacuum achieved during the test run. If the leak rate of the sampling train exceeds 0.02 ACFM or 4 percent of the average sampling rate during the test run (whichever is less), then the run is invalid and you must repeat it.

8.5.3 Post-Test Nitrogen Purge. As soon as possible after the post-test leak-check, detach the probe, any cyclones, and in-stack or hot filters from the condenser and impinger train. Leave the ice in the second impinger box to prevent removal of moisture during the purge. If necessary, add more ice during the purge to maintain the gas temperature measured at the exit of the silica gel impinger below 20 °C (68 °F).

8.5.3.1 If no water was collected before the CPM filter, then you may skip the remaining purge steps and proceed with sample recovery (see Section 8.5.4).

8.5.3.2 Replace the short stem impinger insert with a modified Greenberg Smith impinger insert. The impinger tip length must extend below the water level in the impinger catch. If insufficient water was collected, you must add a measured amount of degassed deionized, distilled ultra-filtered ASTM D1193–06, Type 1 or equivalent) (incorporated by reference) water until the impinger tip is at least 1 cm below the surface of the water. You must record the amount of water added to the dropout impinger (see Figure 4 of Section 18) to correct the moisture content of the effluent gas.

(**Note:** Prior to use, water must be degassed using a nitrogen purge bubbled through the water for at least 15 minutes to remove dissolved oxygen).

8.5.3.3 With no flow of gas through the clean purge line and fittings, attach the line to a purged inline filter. Connect the filter outlet to the input of the impinger train (see Figure 2 of Section 18). To avoid over- or under-pressurizing the impinger array, slowly commence the nitrogen gas flow through the line while simultaneously opening the meter box pump valve(s). Adjust the pump bypass and nitrogen delivery rates to obtain the following conditions: (1) 20 liters/min or ΔH@, and (2) a positive overflow rate through the rotameter of less than 2 liters/min. Condition (2) guarantees that the nitrogen delivery system is operating at greater than ambient pressure and prevents the possibility of passing ambient air (rather than nitrogen) through the impingers. During the purge, continue operation of the condenser recirculation pump, and heat or cool the water surrounding the first two impingers to maintain the gas temperature measured at the exit of the CPM filter below 30 °C (85 °F). Continue the purge under these conditions for 1 hour, checking the rotameter and ΔH value(s) periodically. After 1 hour, simultaneously turn off the delivery and pumping systems.

8.5.3.4 Weigh the liquid, or measure the volume of the liquid collected in the dropout, impingers, and silica trap. Measure the liquid in the first impinger to within 1 mL using a clean graduated cylinder or by weighing it to within 0.5 g using a balance. Record the volume or weight of liquid present to be used to calculate the moisture content of the effluent gas in the field log notebook.

8.5.3.5 If a balance is available in the field, weigh the silica impinger to within 0.5 g. Note the color of the indicating silica gel in the last impinger to determine whether it has been completely spent, and make a notation of its condition in the field log book.

8.5.4 Sample Recovery.

8.5.4.1 Recovery of Filterable Particulate Matter. Recovery of filterable particulate matter involves the quantitative transfer of particles according to the filterable particulate sampling method (i.e., Method 5, 17 or 201A).

8.5.4.2 CPM Container #1, Aqueous Liquid Impinger Contents. Quantitatively transfer liquid from the dropout and the impinger prior to the CPM filter into a clean sample bottle (glass or plastic). Rinse the probe extension, condenser, each impinger and the connecting glassware, and the front half of the CPM filter housing twice with water. Recover the rinse water, and add it to the same sample bottle. Mark the liquid level on the bottle. CPM Container #1 holds the water soluble CPM captured in the impingers.

8.5.4.3 CPM Container #2, Organic Rinses. Follow the water rinses of the probe extension, condenser, each impinger and all of the connecting glassware and front half of the CPM filter with an acetone rinse. Then repeat the entire procedure with two rinses of $MeCl_2$, and save both solvents in a separate glass container identified as CPM Container #2. Mark the liquid level on the jar.

8.5.4.4 CPM Container #3, CPM filter Sample. Use tweezers and/or clean disposable surgical gloves to remove the filter from the CPM filter holder. Place the filter in the petri dish identified as CPM Container #3.

8.5.4.5 CPM Container #4, Cold Impinger Water. You must weigh or measure the volume of the contents of CPM Container #4 either in the field or during sample analysis (see Section 11.2.3). If the water from the cold impinger has been weighed in the field, it can be discarded. Otherwise, quantitatively transfer liquid from the cold impinger that follows the CPM filter into a clean sample bottle (glass or plastic). Mark the liquid level on the bottle. This container holds the remainder of the liquid water from the emission gases.

8.5.4.6 CPM Container #5, Silica Gel Absorbent. You must weigh the contents of CPM Container #5 in the field or during sample analysis (see Section 11.2.4). If the silica gel has been weighed in the field to measure water content, then it can be discarded. Otherwise, transfer the silica gel to its original container and seal. A funnel may make it easier to pour the silica gel without spilling. A rubber policeman may be used as an aid in removing the silica gel from the impinger. It is not necessary to remove the small amount of silica gel dust particles that may adhere to the impinger wall and are difficult to remove. Since the gain in weight is to be used for moisture calculations, do not use any water or other liquids to transfer the silica gel.

8.5.4.7 CPM Container #6, Acetone Rinse Blank. Take 150 mL of the acetone directly from the wash bottle you used, and place it in CPM Container #6, labeled Acetone Rinse Blank (see Section 11.2.5 for analysis). Mark the liquid level on the bottle.

8.5.4.8 CPM Container #7, Water Rinse Blank. Take 150 mL of the water directly from the wash bottle you used, and place it in CPM Container #7, labeled Water Rinse Blank (see Section 11.2.6 for analysis). Mark the liquid level on the bottle.

8.5.4.9 CPM Container #8, Methylene Chloride Rinse Blank. Take 150 mL of the $MeCl_2$ directly from the wash bottle you used, and place it in CPM Container #8, labeled Methylene Chloride Rinse Blank (see

Section 11.2.7 for analysis). Mark the liquid level on the bottle.

8.5.5 Transport procedures. Containers must remain in an upright position at all times during shipping. You do not have to ship the containers under dry or blue ice. However, samples must be maintained at or below 30 °C (85 °F) during shipping.

9.0 Quality Control

9.1 Daily Quality Checks. You must perform daily quality checks of field log books and data entries and calculations using data quality indicators from this method and your site-specific test plan. You must review and evaluate recorded and transferred raw data, calculations, and documentation of testing procedures. You must initial or sign log book pages and data entry forms that were reviewed.

9.2 Calculation Verification. Verify the calculations by independent, manual checks. You must flag any suspect data and identify the nature of the problem and potential effect on data quality. After you complete the test, prepare a data summary and compile all the calculations and raw data sheets.

9.3 Conditions. You must document data and information on the process unit tested, the particulate control system used to control emissions, any non-particulate control system that may affect particulate emissions, the sampling train conditions, and weather conditions. Discontinue the test if the operating conditions may cause non-representative particulate emissions.

9.4 Health and Safety Plan. Develop a health and safety plan to ensure the safety of your employees who are on-site conducting the particulate emission test. Your plan must conform with all applicable Occupational Safety and Health Administration (OSHA), Mine Safety and Health Administration (MSHA), and Department of Transportation (DOT) regulatory requirements. The procedures must also conform to the plant health and safety requirements.

9.5 Calibration Checks. Perform calibration check procedures on analytical balances each time they are used.

9.6 Glassware. Use class A volumetric glassware for titrations, or calibrate your equipment against National Institute of Standards and Technology (NIST) traceable glassware.

9.7 Analytical Balance. Check the calibration of your analytical balance each day you weigh CPM samples. You must use NIST Class S weights at a mass approximately equal to the weight of the sample plus container you will weigh.

9.8 Reagent Blanks. You must run blanks of water, acetone, and methylene chloride used for field recovery and sample analysis. Analyze at least one sample (100 mL minimum) of each reagent that you plan to use for sample recovery and analysis before you begin testing. Running blanks before field use will verify low blank concentrations, thereby reducing the potential for a high field blank on test samples.

9.9 Field Reagent Blanks. You must run at least one field blank of water, acetone, and methylene chloride you use for field recovery. Running independent reagent field blanks will verify that low blank concentrations were maintained during field solvent use and demonstrate that reagents have not been contaminated during field tests.

9.10 Field Train Blank. You must recover a minimum of one field train blank for each set of compliance tests at the facility. You must assemble the sampling train as it will be used for testing. Prior to the purge, you must add 100 mL of water to the first impinger and record this data on Figure 3. You must purge the assembled train as described in Sections 8.5.3.2. and 8.5.3.3. You must recover field train blank samples as described in Section 8.5.4. From the field sample weight, you will subtract the condensable particulate mass you determine with this blank train or 0.002 g (2.0 mg), whichever is less.

9.11 Audit Procedure. Concurrent with compliance sample analysis, and if available, analyze audit material to evaluate the technique of the analyst and the standards preparation. Use the same staff, analytical reagents, and analytical system for both compliance samples and the EPA audit sample. If this condition is met, auditing of subsequent compliance analyses for the same enforcement agency within 30 days is not required. An audit sample set may not be used to validate different sets of compliance samples under the jurisdiction of different enforcement agencies, unless prior arrangements are made with both enforcement agencies.

9.12 Audit Samples. As of the publication date of this test method, audit materials are not available. If audit materials become available, audit samples will be supplied only to enforcement agencies for compliance tests. Audit samples can be requested by a State agency. Audit materials are requested online by authorized regulatory authorities at the following internet address: *http://www.sscap.net/*. Authorization can be obtained by contacting an EPA Emission Measurement Center QA Team Member listed on the EPA TTN Web site at the following internet address: *http://www.epa.gov/ttn/emc/email.html#qaqc*. The request for the audit sample must be made at least 30 days prior to the scheduled compliance sample analysis.

9.13 Audit Results. Calculate the audit sample concentration according to the calculation procedure described in the audit instructions included with the audit sample. Fill in the audit sample concentration and the analyst's name on the audit response form included with the audit instructions. Send one copy to the EPA Regional Office or the appropriate enforcement agency.

10.0 Calibration and Standardization

Maintain a log of all condensable particulate sampling and analysis calibrations. Include copies of the relevant portions of the calibration and field logs in the final test report.

10.1 Thermocouple Calibration. You must calibrate the thermocouples using the procedures described in Section 10.1.4.1.2 of Method 2 of Appendix A–1 to Part 60. Calibrate each temperature sensor at a minimum of three points over the anticipated range of use against an NIST-traceable mercury-in-glass thermometer.

10.2 Ammonium Hydroxide. The 0.1 N NH_4OH used for titrations in this method is made as follows: Add 7 mL of concentrated (14.8 M) NH_4OH to 1 liter of water. Standardize against standardized 0.1 N H_2SO_4, and calculate the exact normality using a procedure parallel to that described in Section 5.5 of Method 6 of Appendix A–4 to 40 CFR part 60. Alternatively, purchase 0.1 N NH_4OH that has been standardized against a NIST reference material. Record the normality on the Condensable Particulate Matter Work Table (see Figure 5 of Section 18).

11.0 Analytical Procedures

11.1 Analytical Data Sheets. (a) Record the filterable particulate field data on the appropriate (*i.e.*, Method 5, 17, or 201A) analytical data sheets. Alternatively, data may be recorded electronically using software applications such as the Electronic Reporting Tool (ERT), available at the following internet address: *http://www.epa.gov/ttn/chief/ert/ert_tool.html*. Record the condensable particulate data on the Condensable Particulate Matter Work Table (see Figure 5 of Section 18).

(b) Measure the liquid in all containers either volumetrically to ± 1 mL or gravimetrically to ± 0.5 g. Confirm on the filterable particulate analytical data sheet whether leakage occurred during transport. If a noticeable amount of leakage has occurred, either void the sample or use methods, subject to the approval of the Administrator, to correct the final results.

11.2 Condensable Particulate Matter Analysis. See the flow chart in Figure 6 of Section 18 for the steps to process and combine fractions from the CPM train.

11.2.1 Container #3, CPM Filter Sample. Extract the filter recovered from the low temperature portion of the train, and combine the extracts with the organic and inorganic fractions resulting from the aqueous impinger sample recovery. If the sample was collected by Method 17 because the stack temperature was below 30 °C (85 °F), process the filter extracts as described in this section without combination with any other portion from the train.

11.2.1.1 Extract the water soluble (aqueous or inorganic) CPM from the CPM filter as described in this section. Fold the CPM filter in quarters, and place it into a 50 mL extraction tube. Add sufficient deionized ultra-filtered water to cover the filter (*e.g.*, 10 mL of water). Place the extractor tube into a sonication bath and extract the water soluble material for a minimum of 2 minutes. Combine the aqueous extract with the contents of Container #1. Repeat this extraction step twice for a total of three extractions.

11.2.1.2 Extract the organic soluble CPM from the CPM filter as described in this section. Add sufficient methylene chloride to cover the filter (e.g., 10 mL of water). Place the extractor tube into a sonication bath and extract the organic soluble material for a minimum of 2 minutes. Combine the organic extract with the contents of Container #2. Repeat this extraction step twice for a total of three extractions.

11.2.2 CPM Container #1, Aqueous Liquid Impinger Contents. Analyze the water soluble CPM in Container 1 as described in this section. Place the contents of Container #1 into a separatory funnel. Add approximately 30 mL of $MeCl_2$ to the funnel, mix well, and drain off the lower organic phase. Repeat this procedure twice with 30 mL of $MeCl_2$ each time combining the organic phase from each extraction. Each time, leave a small amount of the organic/$MeCl_2$ phase in the separatory funnel, ensuring that no water is collected in the organic phase. This extraction should yield about 90 mL of organic extract.

11.2.2.1 CPM Container #2. Combine the organic extract from Container #1 with the organic train rinse in Container 2.

11.2.2.2 Organic Fraction Weight Determination. Place the organic phase in a clean glass beaker. Evaporate the organic extract at room temperature (not to exceed 30 °C (85 °F)) and pressure in a laboratory hood to not less than 10 mL. Quantitatively transfer the beaker contents to a 50-mL preweighed tin, and evaporate to dryness at room temperature (not to exceed 30 °C (85 °F)) and pressure in a laboratory hood. Following evaporation, desiccate the organic fraction for 24 hours in a desiccator containing anhydrous calcium sulfate. Weigh at intervals of at least 6 hours to a constant weight (*i.e.*, ≤ 0.5 mg change from previous weighing), and report results to the nearest 0.1 mg on the Condensable Particulate Matter Work Table (see Figure 5 of Section 18).

11.2.2.3 Inorganic Fraction Weight Determination. Transfer the aqueous fraction from the extraction to a clean 500-mL or smaller beaker. Evaporate to no less than 10 mL liquid on a hot plate or in the oven at 105 °C, and allow to dry at room temperature (not to exceed 30 °C (85 °F). You must ensure that water and volatile acids have completely evaporated before neutralizing nonvolatile acids in the sample. Redissolve the residue in 100 mL of deionized distilled ultra-filtered water (ASTM D1193–06, Type 1 water or equivalent) (incorporated by reference).

11.2.2.4 Use titration to neutralize acid in the sample and remove water of hydration. Calibrate the pH meter with the neutral and acid buffer solutions; then titrate the sample with 0.1N NH_4OH to a pH of 7.0, as indicated by the pH meter. Record the volume of titrant used on the Condensable Particulate Matter Work Table (see Figure 5 of Section 18).

11.2.2.5 Using a hot plate or an oven at 105 °C, evaporate the aqueous phase to approximately 10 mL. Quantitatively transfer the beaker contents to a 50-mL preweighed tin, and evaporate to dryness at room temperature (not to exceed 30 °C (85 °F)) and pressure in a laboratory hood. Following evaporation, desiccate the residue for 24 hours in a desiccator containing anhydrous calcium sulfate. Weigh at intervals of at least 6 hours to a constant weight (*i.e.*, ≤ 0.5 mg change from previous weighing), and report results to the nearest 0.1 mg on the Condensable Particulate Matter Work Table (see Figure 5 of Section 18).

11.2.2.6 Calculate the correction factor to subtract the $NH4^+$ retained in the sample using Equation 1 in Section 12.

11.2.3 CPM Container #4, Cold Impinger Water. If the amount of water has not been determined in the field, note the level of liquid in the container, and confirm on the filterable particulate analytical data sheet whether leakage occurred during transport. If a noticeable amount of leakage has occurred, either void the sample or use methods, subject to the approval of the Administrator, to correct the final results. Measure the liquid in Container #4 either volumetrically to ± 1 mL or gravimetrically to ± 0.5 g, and record the volume or weight on the filterable particulate analytical data sheet of the filterable particulate matter test method.

11.2.4 CPM Container #5, Silica Gel Absorbent. Weigh the spent silica gel (or silica gel plus impinger) to the nearest 0.5 g using a balance. This step may be conducted in the field. Record the weight on the filterable particulate analytical data sheet of the filterable particulate matter test method.

11.2.5 Container #6, Acetone Field Rinse Blank. Use 100 mL of acetone from the blank container for this analysis. If insufficient liquid is available or if the acetone has been lost due to container breakage, either void the sample, or use methods, subject to the approval of the Administrator, to correct the final results. Transfer 100 mL of the acetone to a clean 250-mL beaker. Evaporate the acetone at room temperature (not to exceed 30 °C (85 °F)) and pressure in a laboratory hood to approximately 10 mL. Quantitatively transfer the beaker contents to a 50-mL preweighed tin, and evaporate to dryness at room temperature (not to exceed 30 °C (85 °F)) and pressure in a laboratory hood. Following evaporation, desiccate the residue for 24 hours in a desiccator containing anhydrous calcium sulfate. Weigh at intervals of at least 6 hours to a constant weight (*i.e.*, ≤ 0.5 mg change from previous weighing), and report results to the nearest 0.1 mg on Figure 3.

11.2.6 Water Rinse Field Blank, Container #7. Use 100 mL of the water from the blank container for this analysis. If insufficient liquid is available, or if the water has been lost due to container breakage, either void the sample, or use methods, subject to the approval of the Administrator, to correct the final results. Transfer the water to a clean 250-mL beaker, and evaporate to approximately 10 mL liquid in the oven at 105 °C. Quantitatively transfer the beaker contents to a clean preweighed 50-mL tin, and evaporate to dryness at room temperature (not to exceed 30 °C (85 °F)) and pressure in a laboratory hood. Following evaporation, desiccate the residue for 24 hours in a desiccator containing anhydrous calcium sulfate. Weigh at intervals of at least 6 hours to a constant weight (*i.e.*, ≤ 0.5 mg change from previous weighing) and report results to the nearest 0.1 mg on Figure 3.

11.2.7 Methylene Chloride Field Reagent Blank, Container #8. Use 100 mL of $MeCl_2$ from the blank container for this analysis. Transfer 100 mL of the $MeCl_2$ to a clean 250-mL beaker. Evaporate the methylene chloride at room temperature (not to exceed 30 °C (85 °F)) and pressure in a laboratory hood to approximately 10 mL. Quantitatively transfer the beaker contents to a 50-mL preweighed tin, and evaporate to dryness at room temperature (not to exceed 30 °C (85 °F)) and pressure in a laboratory hood. Following evaporation, desiccate the residue for 24 hours in a desiccator containing anhydrous calcium sulfate. Weigh at intervals of at least 6 hours to a constant weight (*i.e.*, ≤ 0.5 mg change from previous weighing), and report results to the nearest 0.1 mg on Figure 3.

12.0 Calculations and Data Analysis

12.1 Nomenclature. Report results in International System of Units (SI units) unless the regulatory authority for compliance testing specifies English units. The following nomenclature is used.

$\Delta H_@$ = Pressure drop across orifice at flow rate of 0.75 SCFM at standard conditions, in. W.C.

[**Note:** specific to each orifice and meter box.]

17.03 = mg/milliequivalents for ammonium ion.

ACFM = Actual cubic feet per minute.

C_{cpm} = Concentration of the condensable particulate matter in the stack gas, dry basis, corrected to standard conditions, milligrams/dry standard cubic foot.

m_c = Mass of the NH_4^+ added to sample to form ammonium sulfate, mg.

m_{cpm} = Mass of the total condensable particulate matter, mg.

m_{fb} = Mass of field train total CPM blank, mg

m_i = Mass of inorganic CPM matter, mg.

m_{ib} = Mass of field train inorganic CPM blank, mg.

m_o = Mass of organic CPM, mg.

m_{ob} = Mass of organic field train blank, mg.

m_r = Mass of dried sample from inorganic fraction, mg.

N = Normality of ammonium hydroxide titrant.

$V_{m(std)}$ = Volume of gas sample measured by the dry gas meter, corrected to standard conditions, dry standard cubic meter (dscm) or dry standard cubic foot (dscf) as defined in Equation 5–1 of Method 5.

V_t = Volume of NH_4OH titrant, mL.

V_p = Volume of water added during train purge.

12.2 Calculations. Use the following equations to complete the calculations required in this test method. Enter the appropriate results from these calculations on the Condensable Particulate Matter Work Table (see Figure 5 of Section 18).

12.2.1 Mass of ammonia correction. Correction for ammonia added during titration of 100 mL aqueous CPM sample. This calculation assumes no waters of hydration.

$$m_C = 17.03 \times v_t \times N \qquad \text{Eq. 1}$$

12.2.2 Mass of the Field Blank (mg). Per Section 9.9, the mass of the field blank, m_{fb}, shall not exceed 2.0 mg.

$$m_{fb} = m_{ib} + m_{ob} \qquad \text{Eq. 2}$$

12.2.3 Mass of Inorganic CPM (mg).

$$m_i = m_r - m_c \qquad \text{Eq. 3}$$

12.2.4 Total Mass of CPM (mg).

$$m_{cpm} = m_i + m_o - m_{fb} \qquad \text{Eq. 4}$$

12.2.5 Concentration of CPM (mg/dscf).

$$C_{cpm} = \frac{m_{cpm}}{V_{m(std)}} \qquad \text{Eq. 5}$$

12.3 Emissions Test Report. Include the following list of conventional elements in the emissions test report.

(a) Emission test description including any deviations from this protocol.

(b) Summary data tables on a run-by-run basis that include the condensable particulate mass.

(c) Flowchart of the process or processes tested.

(d) Sketch of the sampling location.

(e) Preliminary traverse data sheets including cyclonic flow checks.

(f) Raw field data sheets and copies of field log pages.

(g) Laboratory analytical sheets and case narratives.

(h) Pretest and post test reagent blank results.

(i) Sample calculations.

(j) Pretest and post-test calibration data.

(k) Chain of custody forms.

(l) Documentation of process and air pollution control system data.

13.0 Method Performance [Reserved]

14.0 Pollution Prevention [Reserved]

15.0 Waste Management

Solvent and water are evaporated in a laboratory hood during analysis. No liquid waste is generated in the performance of this method. Organic solvents used to clean sampling equipment should be managed as RCRA organic waste.

16.0 Alternative Procedures [Reserved]

17.0 References

1. U.S. Environmental Protection Agency, Federal Reference Methods 1 through 5 and Method 17, 40 CFR 60, Appendix A–1 through A–3 and A–6.

2. Richards, J., T. Holder, and D. Goshaw. ''Optimized Method 202 Sampling Train to Minimize the Biases Associated with Method 202 Measurement of Condensable Particulate Matter Emissions.'' Paper presented at Air & Waste Management Association Hazardous Waste Combustion Specialty Conference. St. Louis, Missouri. November 2–3, 2005.

3. DeWees, W.D., S.C. Steinsberger, G.M. Plummer, L.T. Lay, G.D. McAlister, and R.T. Shigehara. ''Laboratory and Field Evaluation of the EPA Method 5 Impinger Catch for Measuring Condensable Matter from Stationary Sources.'' Paper presented at the 1989 EPA/AWMA International Symposium on Measurement of Toxic and Related Air Pollutants. Raleigh, North Carolina. May 1–5, 1989.

4. DeWees, W.D. and K.C. Steinsberger. ''Method Development and Evaluation of Draft Protocol for Measurement of Condensable Particulate Emissions.'' Draft Report. November 17, 1989.

5. Texas Air Control Board, Laboratory Division. ''Determination of Particulate in Stack Gases Containing Sulfuric Acid and/or Sulfur Dioxide.'' Laboratory Methods for Determination of Air Pollutants. Modified December 3, 1976.

6. Nothstein, Greg. Masters Thesis. University of Washington. Department of Environmental Health. Seattle, Washington.

7. ''Particulate Source Test Procedures Adopted by Puget Sound Air Pollution Control Agency Board of Directors.'' Puget Sound Air Pollution Control Agency, Engineering Division. Seattle, Washington. August 11, 1983.

8. Commonwealth of Pennsylvania, Department of Environmental Resources. Chapter 139, Sampling and Testing (Title 25, Rules and Regulations, Part I, Department of Environmental Resources, Subpart C, Protection of Natural Resources, Article III, Air Resources). January 8, 1960.

9. Wisconsin Department of Natural Resources. Air Management Operations Handbook, Revision 3. January 11, 1988.

10. U.S. Environmental Protection Agency, ''Laboratory Evaluation of Method 202 to Determine Fate of SO2 in Impinger Water,'' EPA Contract No. 68–D–02–061, Work Assignment 3–14, September 30, 2005.

11. U.S. Environmental Protection Agency, ''Evaluation and Improvement of Condensable Particulate Matter Measurement,'' EPA Contract No. EP–D–07–097, Work Assignment 2–03, October 2008.

12. Electric Power Research Institute (EPRI), ''Laboratory Comparison of Methods to Sample and Analyze Condensable Particulate Matter,'' EPRI Agreement EP–P24373/C11811 Condensable Particulate Methods: EPRI Collaboration with EPA, October 2008.

18.0 Tables, Diagrams, Flowcharts, and Validation Data

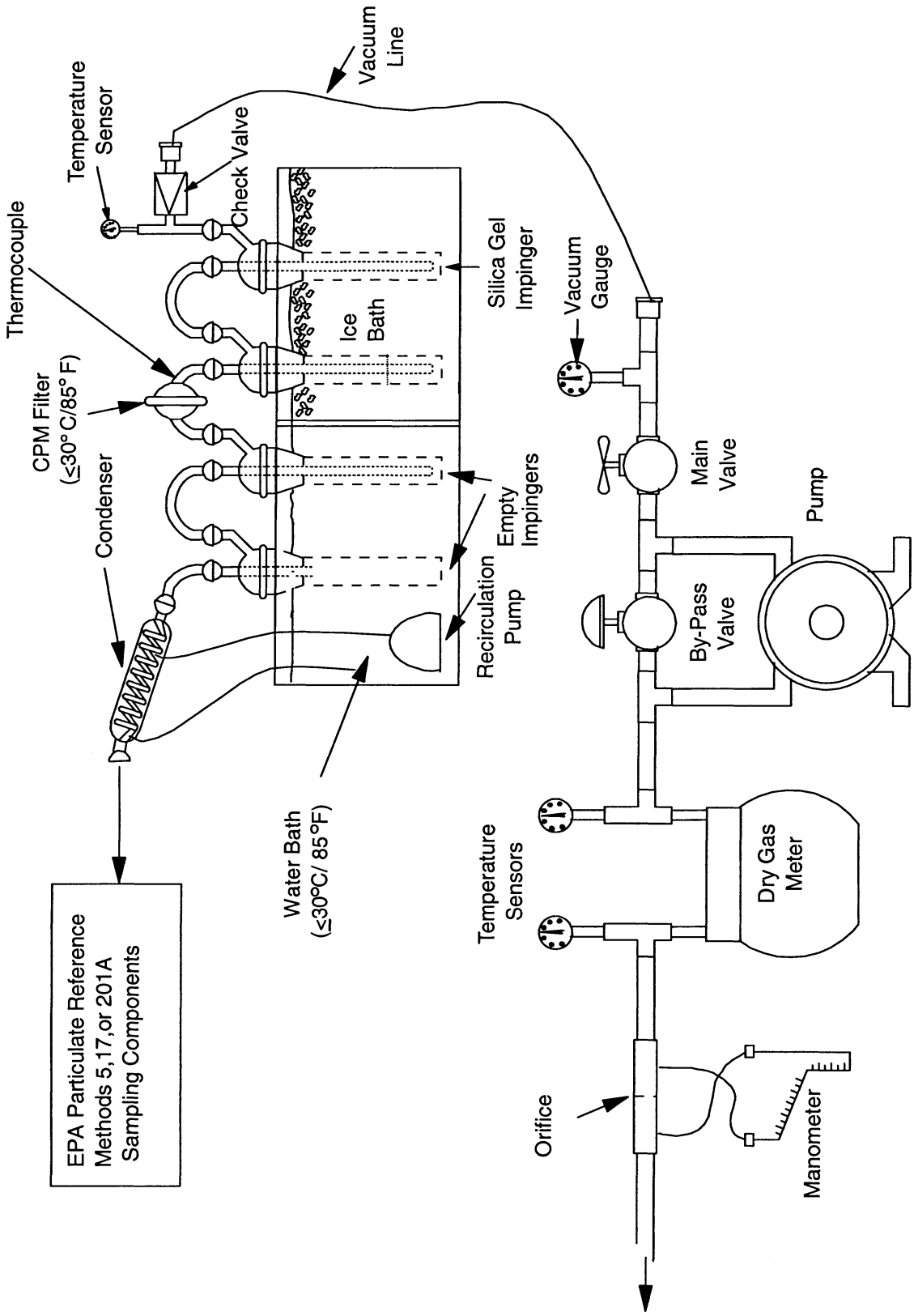

Figure 1. Schematic of Condensable Particulate Sampling Train

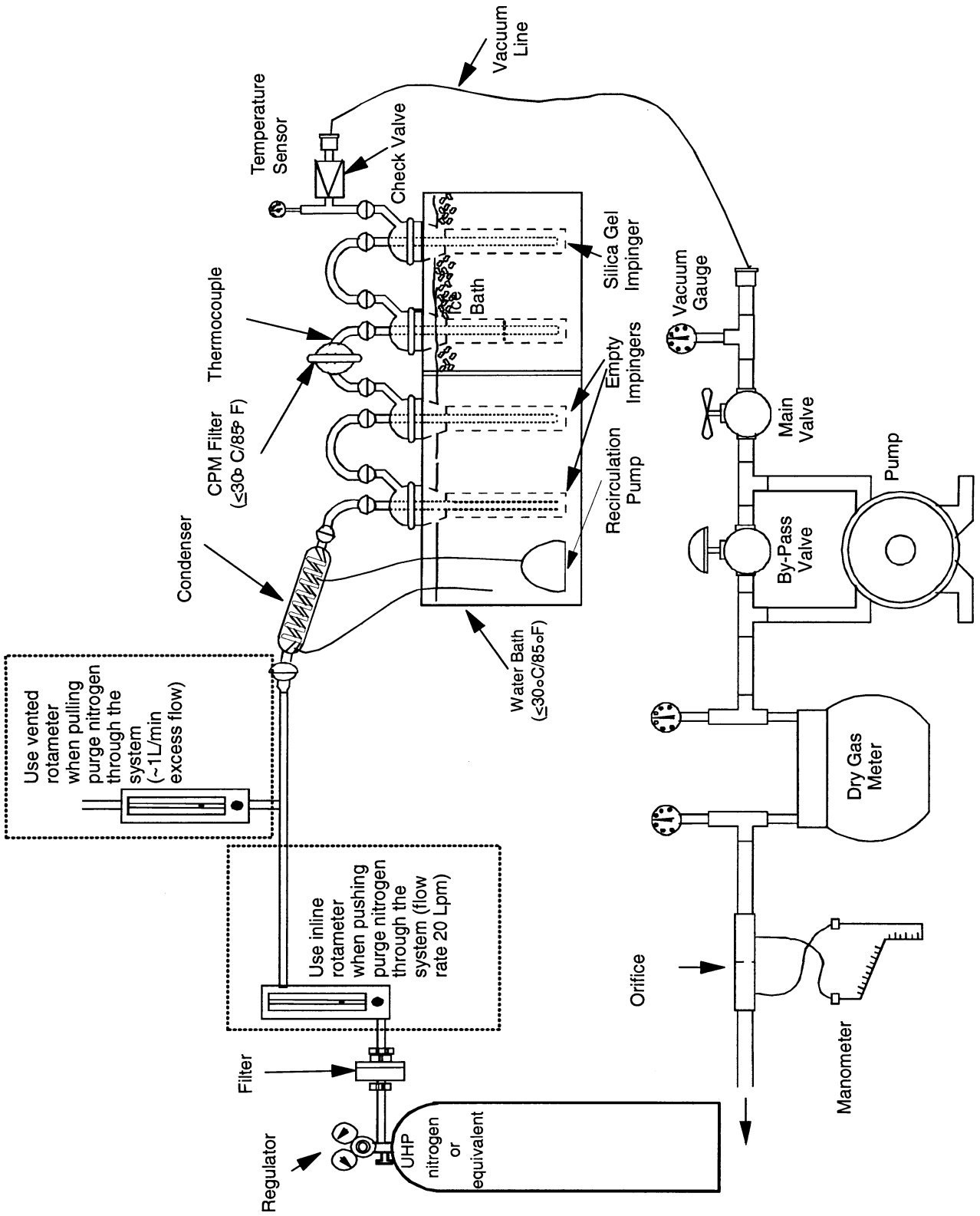

Figure 2. Nitrogen Purge Train Configuration

FIGURE 3—FIELD TRAIN BLANK CONDENSABLE PARTICULATE CALCULATIONS

Field Train Blank Condensable Particulate Calculations	
Plant	
Date	
Blank No.	
CPM Filter No.	
Water volume added to purge train (V_p)	ml
Field Reagent Blank Mass	
Water (Section 11.2.6)	mg
Acetone (Section 11.2.5)	mg
Methylene Chloride (Section 11.2.7)	mg
Field Train Reagent Blank Mass	
Mass of Organic CPM (m_{ob})(Section 11.2.2.2).	mg

FIGURE 3—FIELD TRAIN BLANK CONDENSABLE PARTICULATE CALCULATIONS—Continued

Mass of Inorganic CPM (m_{ib})(Equation 3).	mg
Mass of the Field Train Blank (not to exceed 2.0 mg) (Equation 2).	mg

FIGURE 4—OTHER FIELD TRAIN SAMPLE CONDENSABLE PARTICULATE DATA

Other Field Train Sample Condensable Particulate Data	
Plant	
Date	
Run No.	
CPM Filter No.	
Water volume added to purge train [max 50 mL] (V_p).	ml
Date	
Run No.	
CPM Filter No.	
Water volume added to purge train [max 50 mL] (V_p).	ml
Date	
Run No.	
CPM Filter No.	
Water volume added to purge train [max 50 mL] (V_p)	ml

FIGURE 5—CONDENSABLE PARTICULATE MATTER WORK TABLE

Calculations for Recovery of Condensable Particulate Matter (CPM)

Plant

Date

Run No.

Sample Preparation—CPM Containers No. 1 and 2 (Section 11.1)

- Was significant volume of water lost during transport? Yes or No ..... _____
- If Yes, measure the volume received ..... _____
- Estimate the volume lost during transport ..... _____ mL
- Was significant volume of organic rinse lost during transport? Yes or No ..... _____
- If Yes, measure the volume received. Estimate the volume lost during transport ..... _____ mL

For Titration

- Normality of NH_4OH (N) (Section 10.2) ..... _____ N
- Volume of titrant (V_t) (Section 11.2.2.4) ..... _____ mL
- Mass of NH_4 added (m_c) (Equation 1) ..... _____ mg

For CPM Blank Weights

- Inorganic Train Field Blank Mass(m_{ib}) (Section 9.9) ..... _____ mg
- Organic Train Field Blank Mass (m_{ob}) (Section 9.9) ..... _____ mg
- Mass of Train Field Blank (M_{fb}) (max. 2 mg) (Equation 2) ..... _____ mg

For CPM Train Weights

- Mass of Organic CPM (m_o) (Section 11.2.2.2) ..... _____ mg
- Mass of Inorganic CPM (m_i) (Equation 3) ..... _____ mg
- Total CPM Mass (m_{cpm}) (Equation 4) ..... _____ mg

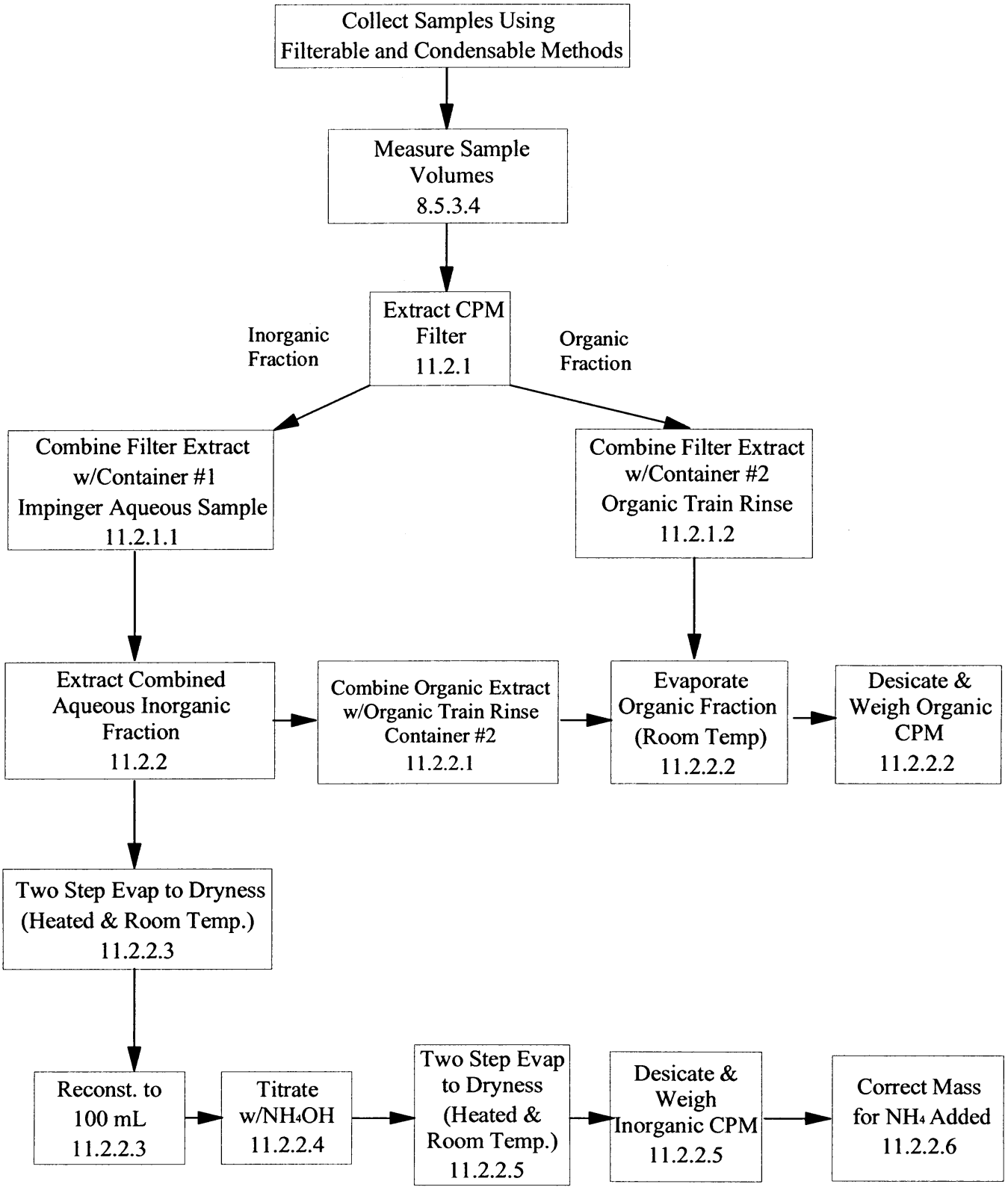

Figure 6. CPM Sample Processing Flow Chart

[FR Doc. E9–6178 Filed 3–24–09; 8:45 am]
BILLING CODE 6560–50–C

Federal Register

Wednesday,
March 25, 2009

Part IV

Environmental Protection Agency

40 CFR Part 52

Approval and Promulgation of Air Quality Implementation Plans; Pennsylvania; Update to Materials Incorporated by Reference; Final Rule

ENVIRONMENTAL PROTECTION AGENCY

40 CFR Part 52

[PA200–4202; FRL–8774–8]

Approval and Promulgation of Air Quality Implementation Plans; Pennsylvania; Update to Materials Incorporated by Reference

AGENCY: Environmental Protection Agency (EPA).

ACTION: Final rule; administrative change.

SUMMARY: EPA is updating the materials submitted by Pennsylvania that are incorporated by reference (IBR) into the State implementation plan (SIP). The regulations affected by this update have been previously submitted by the Pennsylvania Department of Environmental Protection and approved by EPA. This update affects the SIP materials that are available for public inspection at the National Archives and Records Administration (NARA), the Air and Radiation Docket and Information Center located at EPA Headquarters in Washington, D.C., and the Regional Office.

DATES: *Effective Date:* This action is effective March 25, 2009.

ADDRESSES: SIP materials which are incorporated by reference into 40 CFR part 52 are available for inspection at the following locations: Air Protection Division, U.S. Environmental Protection Agency, Region III, 1650 Arch Street, Philadelphia, Pennsylvania 19103; the Air and Radiation Docket and Information Center, EPA Headquarters Library, Room Number 3334, EPA West Building, 1301 Constitution Ave., NW., Washington, DC 20460, and the National Archives and Records Administration. If you wish to obtain materials from a docket in the EPA Headquarters Library, please call the Office of Air and Radiation (OAR) Docket/Telephone number: (202) 566–1742; or the National Archives and Records Administration (NARA). For information on the availability of this material at NARA, call 202–741–6030, or go to: *http://www.archives.gov/federal_register/code_of_federal_regulations/ibr_locations.html*.

FOR FURTHER INFORMATION CONTACT: Harold A. Frankford, (215) 814–2108 or by e-mail at *frankford.harold@epa.gov*.

SUPPLEMENTARY INFORMATION:

I. Background

The SIP is a living document which the State revises as necessary to address the unique air pollution problems. Therefore, EPA, from time to time must take action on SIP revisions containing new and/or revised regulations to make them part of the SIP. On May 22, 1997 (62 FR 27968), EPA revised the procedures for incorporating by reference Federally-approved SIPs, as a result of consultations between EPA and the Office of the **Federal Register** (OFR). The description of the revised SIP document, IBR procedures and ''Identification of plan'' format are discussed in further detail in the May 22, 1997 **Federal Register** document. On February 25, 2005 (70 FR 9450), EPA published a document in the **Federal Register** beginning the new IBR procedure for Pennsylvania, including Philadelphia and Allegheny Counties. On January 3, 2007 (72 FR 200), EPA published an update to the IBR materials for Pennsylvania, as of November 1, 2006.

II. EPA Action

In this document, EPA is doing the following:

1. Announcing the update to the IBR material as of December 1, 2008. This update includes specifically-identified material which has not been revised between November 1, 2006 and December 1, 2008.

2. Making corrections to the following entries listed in the paragraph 52.2020(c)(1) table, as described below:

a. Restoring the entry for Section 129.51 (Sources of VOC's-General). This rule, which is currently part of the Pennsylvania SIP, was listed in the original version of the table published at 40 CFR 52.2020(c)(1) (*See,* 70 FR 9450 at 9457), but inadvertently removed in a subsequent IBR update rulemaking action.

b. Correcting the **Federal Register** page citation in the ''EPA approval date'' column for rules in Title 25, Chapter 127, subchapters A, B, C, F, H, and I which EPA had approved on July 30, 1996 (61 FR 39594 and 61 FR 39597).

c. Correcting the **Federal Register** page citation in the ''EPA approval date'' column for rules in Title 25, Sections 139.5, 139.13, 139.32, 139.102 and 139.103 which EPA had approved on July 30, 1996 (61 FR 39594 and 61 FR 39597).

d. Removing a duplicate and outdated entry for Title 67, Section 175.41.

3. Making corrections to the following entries listed in the paragraph 52.2020(c)(2) table, as described below:

a. Removing the entry for Aricle XX, Section 532. EPA has determined that this entry has been erroneously included because the SIP approval action taken on January 21, 1983 (48 FR 2768) specifically excluded EPA action on this Article XX rule (48 FR 2768 at 2769).

b. Correcting the **Federal Register** page citation in the ''EPA approval date'' column for Article XXI, Regulation 2105.14.

4. In the 52.2020(d)(1) table, correcting text errors in the ''County'' and ''State effective date'' column in the entry for Cogentrix of Pennsylvania Inc.

5. Making corrections to the following entries listed in the paragraph 52.2020(e)(1) table, as described below:

a. Source Testing Manual—correcting the **Federal Register** page citation in the ''EPA approval date'' column.

b. Continuous Source Testing Manual—correcting the text in ''Name'' and ''Geographic area'' columns and correcting the **Federal Register** page citation in the ''EPA approval date'' column.

c. 8-hour Ozone Maintenance Plan and 2002 Base Year Emissions Inventory, Erie County—relocating this entry within the chart so as to be in its proper chronological order and adding a reference in the ''Additional explanation'' column regarding a related correction **Federal Register** notice.

d. 8-hour Ozone Maintenance Plan and 2002 Base Year Emissions Inventory, Reading Area (Berks County)—correcting the date format in ''State submittal date'' column and adding a reference in the ''Additional explanation'' column regarding a related correction **Federal Register** notice.

e. 8-hour Ozone Maintenance Plan and 2002 Base Year Emissions Inventory, Johnstown (Cambria County) and Mercer County—adding reference in the ''Additional explanation'' column regarding related correction **Federal Register** notices.

f. 8-hour Ozone Maintenance Plan and 2002 Base Year Emissions Inventory, Wayne County—correcting the date format in ''State submittal date'' column.

EPA has determined that today's rule falls under the ''good cause'' exemption in section 553(b)(3)(B) of the Administrative Procedures Act (APA) which, upon finding ''good cause,'' authorizes agencies to dispense with public participation, and section 553(d)(3) which allows an agency to make a rule effective immediately (thereby avoiding the 30-day delayed effective date otherwise provided for in the APA). Today's rule simply codifies provisions which are already in effect as a matter of law in Federal and approved State programs. Under section 553 of the APA, an agency may find good cause where procedures are ''impractical,

unnecessary, or contrary to the public interest.'' Public comment is ''unnecessary'' and ''contrary to the public interest'' since the codification only reflects existing law. Immediate notice in the CFR benefits the public by removing outdated citations and incorrect chart entries.

III. Statutory and Executive Order Reviews

A. General Requirements

Under the Clean Air Act, the Administrator is required to approve a SIP submission that complies with the provisions of the Act and applicable Federal regulations. 42 U.S.C. 7410(k); 40 CFR 52.02(a). Thus, in reviewing SIP submissions, EPA's role is to approve state choices, provided that they meet the criteria of the Clean Air Act. Accordingly, this action merely approves state law as meeting Federal requirements and does not impose additional requirements beyond those imposed by state law. For that reason, this action:

- Is not a ''significant regulatory action'' subject to review by the Office of Management and Budget under Executive Order 12866 (58 FR 51735, October 4, 1993);
- Does not impose an information collection burden under the provisions of the Paperwork Reduction Act (44 U.S.C. 3501 *et seq.*);
- Is certified as not having a significant economic impact on a substantial number of small entities under the Regulatory Flexibility Act (5 U.S.C. 601 *et seq.*);
- Does not contain any unfunded mandate or significantly or uniquely affect small governments, as described in the Unfunded Mandates Reform Act of 1995 (Pub. L. 104–4);
- Does not have Federalism implications as specified in Executive Order 13132 (64 FR 43255, August 10, 1999);
- Is not an economically significant regulatory action based on health or safety risks subject to Executive Order 13045 (62 FR 19885, April 23, 1997);
- Is not a significant regulatory action subject to Executive Order 13211 (66 FR 28355, May 22, 2001);
- Is not subject to requirements of Section 12(d) of the National Technology Transfer and Advancement Act of 1995 (15 U.S.C. 272 note) because application of those requirements would be inconsistent with the Clean Air Act; and
- Does not provide EPA with the discretionary authority to address, as appropriate, disproportionate human health or environmental effects, using practicable and legally permissible methods, under Executive Order 12898 (59 FR 7629, February 16, 1994).

B. Submission to Congress and the Comptroller General

The Congressional Review Act, 5 U.S.C. 801 *et seq.*, as added by the Small Business Regulatory Enforcement Fairness Act of 1996, generally provides that before a rule may take effect, the agency promulgating the rule must submit a rule report, which includes a copy of the rule, to each House of the Congress and to the Comptroller General of the United States. EPA will submit a report containing this rule and other required information to the U.S. Senate, the U.S. House of Representatives, and the Comptroller General of the United States prior to publication of the rule in the **Federal Register**. This rule is not a ''major rule'' as defined by 5 U.S.C. 804(2).

C. Petitions for Judicial Review

EPA has also determined that the provisions of section 307(b)(1) of the Clean Air Act pertaining to petitions for judicial review are not applicable to this action. Prior EPA rulemaking actions for each individual component of the Pennsylvania SIP compilations had previously afforded interested parties the opportunity to file a petition for judicial review in the United States Court of Appeals for the appropriate circuit within 60 days of such rulemaking action. Thus, EPA sees no need in this action to reopen the 60-day period for filing such petitions for judicial review for this ''Identification of plan'' reorganization update action for Pennsylvania.

List of Subjects in 40 CFR Part 52

Environmental protection, Air pollution control, Carbon monoxide, Incorporation by reference, Intergovernmental relations, Lead, Nitrogen dioxide, Ozone, Particulate matter, Reporting and recordkeeping requirements, Sulfur oxides, Volatile organic compounds.

Dated: February 2, 2009.

William T. Wisniewski,

Acting Regional Administrator, Region III.

■ 40 CFR part 52 is amended as follows:

PART 52—[AMENDED]

■ 1. The authority for citation for part 52 continues to read as follows:

Authority: 42 U.S.C. 7401 *et seq.*

Subpart NN—Pennsylvania

■ 2. Section 52.2020 is amended by revising paragraphs (b), (c), (d), and (e)(1) to read as follows:

§ 52.2020 Identification of plan.

* * * * *

(b) Incorporation by reference.

(1) Material listed as incorporated by reference in paragraphs (c) and (d) of this section was approved for incorporation by reference by the Director of the Federal Register in accordance with 5 U.S.C. 552(a) and 1 CFR part 51. Material incorporated as it exists on the date of the approval, and notice of any change in the material will be published in the **Federal Register**. Entries in paragraphs (c) and (d) of this section with EPA approval dates on or after December 1, 2008 will be incorporated by reference in the next update to the SIP compilation.

(2)(i) EPA Region III certifies that the following rules/regulations and source-specific requirements provided by EPA at the addresses in paragraph (b)(3) of this section are an exact duplicate of the officially promulgated State rules/regulations and source-specific requirements which have been approved as part of the State implementation plan as of December 1, 2008:

(A) Materials in Notebook ''1. 40 CFR 52.2020(c)(1)—Pa Department of Transportation (Pa DOT); 2. 40 CFR 52.2020(c)(2)—Allegheny County Health Department (ACHD); 3. 40 CFR 52.2020(c)(3)—Philadelphia Air Management Services (AMS).''

(B) Materials in Notebook ''40 CFR 52.2020(d)(1)—Source-specific Requirements—Volume 6.''

(ii) EPA Region III certifies that the following rules/regulations and source specifc requirements provided by EPA at the addresses in paragraph (b)(3) of this section are an exact duplicate of the officially promulgated State rules/regulations which have been approved as part of the State implementation plan as of November 1, 2006. No additional revisions were made between November 1, 2006 and December 1, 2008:

(A) Materials in Notebook ''40 CFR 52.2020(c)(1)—Pa Department of Environmental Protection (DEP).''

(B) Materials in Notebook ''40 CFR 52.2020(d)(1)—Source-specific Requirements—Volume 1, Part 1.''

(C) Materials in Notebook ''40 CFR 52.2020(d)(1)—Source-specific Requirements—Volume 1, Part 2.''

(D) Materials in Notebook ''40 CFR 52.2020(d)(1)—Source-specific Requirements—Volume 2, Part 1.''

(E) Materials in Notebook ''40 CFR 52.2020(d)(1)—Source-specific Requirements—Volume 2, Part 2.''

(F) Materials in Notebook ''40 CFR 52.2020(d)(1)—Source-specific Requirements—Volume 3.''

(G) Materials in Notebook ''40 CFR 52.2020(d)(1)—Source-specific Requirements—Volume 4.''

(H) Materials in Notebook ''40 CFR 52.2020(d)(1)—Source-specific Requirements—Volume 5.''

(I) Materials in Notebook ''40 CFR 52.2020(d)(2)–(d)(4)—Source-specific Requirements.''

(3) Copies of the materials incorporated by reference may be inspected at the EPA Region III Office at 1650 Arch Street, Philadelphia, PA 19103. For further information, call (215) 814–2108; the EPA, Air and Radiation Docket and Information Center, Room Number 3334, EPA West Building, 1301Constitution Avenue NW., Washington, DC 20460. For further information, call (202) 566–1742; or at the National Archives and Records Administration (NARA). For information on the availability of this material at NARA, call 202–741–6030, or go to: *http://www.archives.gov/federal_register/code_of_federal_regulations/ibr_locations.html*.

(c) *EPA-Approved Regulations*

(1) EPA-APPROVED PENNSYLVANIA REGULATIONS

State citation	Title/subject	State effective date	EPA approval date	Additional explanation/ § 52.2063 citation
Title 25—Environmental Protection Article III—Air Resources Chapter 121—General Provisions				
Section 121.1	Definitions	12/11/04	9/29/06, 71 FR 57428	Revised; SIP-effective date is 10/30/06.
Section 121.2	Purpose	3/20/72	5/31/72, 37 FR 10842	(c)(1).
Section 121.3	Applicability	3/20/72	5/31/72, 37 FR 10842	(c)(1).
Section 121.4	Regional Organization of the Department.	5/23/92	12/22/94, 59 FR 65971	(c)(94).
Section 121.7	Prohibition of Air Pollution	3/20/72	5/31/72, 37 FR 10842	(c)(1).
Section 121.8	Compliance responsibilities	8/13/77	12/17/79, 44 FR 73031	(c)(21); correction published 8/22/80 (45 FR 56060).
Section 121.9	Circumvention	3/20/72	5/31/72, 37 FR 10842	(c)(1).
Section 121.10	Existing orders	3/20/72	5/31/72, 37 FR 10842	(c)(1).
Section 121.11	Severability clause	3/20/72	5/31/72, 37 FR 10842	(c)(1); no longer in PA DEP rules.
Chapter 123—Standards for Contaminants				
Fugitive Emissions				
Section 123.1(a) through (c).	Prohibition of certain fugitive emissions.	8/29/77	12/17/79, 44 FR 73031	(c)(21); Paragraph 123.1(d) is not in the SIP.
Section 123.2	Fugitive particulate matter	8/13/83	7/27/84, 49 FR 30183	(c)(60).
Particulate Matter Emissions				
Section 123.11	Combustion units	3/20/72	5/31/72, 37 FR 10842	(c)(1).
Appendix A [Graph]	Particulate Matter—Combustion Units.	3/20/72	5/31/72, 37 FR 10842	(c)(1).
Section 123.12	Incinerators	3/20/72	5/31/72, 37 FR 10842	(c)(1).
Section 123.13(a) through (c).	Processes	8/27/80	11/13/81, 46 FR 55971	(c)(39); paragraph 123.13(d) is not in the SIP.
Appendix B [Graph]	Particulate Matter—Processes Listed in Table 1.	3/20/72	5/31/72, 37 FR 10842	(c)(1).
Appendix C [Graph]	Particulate Matter—Processes Not Listed in Table 1.	3/20/72	5/31/72, 37 FR 10842	(c)(1).
Sulfur Compound Emissions				
Section 123.21	General	3/20/72	5/31/72, 37 FR 10842	(c)(1).
Section 123.22	Combustion units. [General provisions—air basins and non-air basins.	3/20/72	5/31/72, 37 FR 10842	(c)(1).
Section 123.22(a)	Combustion units—non air basins	8/1/79	8/18/81, 46 FR 43423	(c)(36); approved as part of the control strategy for the Armstrong County sulfur dioxide nonattainment area.
Section 123.22(b)	Combustion units—Erie Air Basin	8/1/79	8/8/79, 44 FR 46465	(c)(20); correction published 1/23/80 (45 FR 5303).
Section 123.22(c)	Combustion units—Southeast PA Air Basin.	10/1/78	6/4/79, 44 FR 31980	(c)(18).
Section 123.22(c)	Combustion units—Upper Beaver Valley Air Basin.	8/21/82	7/5/83, 48 FR 30630	(c)(53).
Section 123.22(d)	Combustion units—Lower Beaver Valley Air Basin.	1/1/81	12/16/81, 46 FR 61267	(c)(40).
Figure 4 [Graph]	Sulfur Oxides—Combustion Units	3/20/72	5/31/72, 37 FR 10842	(c)(1).

(1) EPA-APPROVED PENNSYLVANIA REGULATIONS—Continued

State citation	Title/subject	State effective date	EPA approval date	Additional explanation/ § 52.2063 citation
Section 123.24	Primary zinc smelters	8/11/75	4/30/76, 41 FR 18077	(c)(14).
Section 123.25	Monitoring requirements	10/27/90	6/30/93, 58 FR 34911	(c)(81).
Odor Emissions				
Section 123.31	Limitations	3/20/72	5/31/72, 37 FR 10842	(c)(1); SIP version of Section 123.31 is different from State version.
Visible Emissions				
Section 123.41	Limitations	3/20/72	5/31/72, 37 FR 10842	(c)(1).
Section 123.42 (Except paragraph 123.42(4)).	Exceptions	3/20/72	5/31/72, 37 FR 10842	(c)(1); Paragraph 123.42(4) is declared not in SIP at (c)(21).
Section 123.43	Measuring Techniques	3/20/72	5/31/72, 37 FR 10842	(c)(1).
Section 123.44	Limitations of visible fugitive air contaminants from operation of any coke oven battery.	12/27/97	6/11/02, 67 FR 39854	(c)(189).
Section 123.45	Alternative opacity limitations	6/20/81	1/19/83, 48 FR 2319	(c)(48).
Appendix D [Chart]	Alternate Opacity Limitation—Application.	6/20/81	1/19/83, 48 FR 2319	(c)(48).
Section 123.46	Monitoring requirements	6/20/81	1/19/83, 48 FR 2319	(c)(48).
Nitrogen Compound Emissions				
Section 123.51	Monitoring requirements	10/20/90	9/23/92, 57 FR 43905	(c)(74).
NO_X Allowance Requirements				
Section 123.101	Purpose	11/1/97	6/6/00, 65 FR 35840	(c)(145).
Section 123.102	Source NO_X allowance requirements and NO_X allowance control period.	11/1/97	6/6/00, 65 FR 35840	(c)(145).
Section 123.103	General NO_X allowance provisions	11/1/97	6/6/00, 65 FR 35840	(c)(145).
Section 123.104	Source authorized account representative requirements.	11/1/97	6/6/00, 65 FR 35840	(c)(145).
Section 123.105	NATS provisions	11/1/97	6/6/00, 65 FR 35840	(c)(145).
Section 123.106	NO_X allowance transfer protocol	11/1/97	6/6/00, 65 FR 35840	(c)(145).
Section 123.107	NO_X allowance transfer procedures	11/1/97	6/6/00, 65 FR 35840	(c)(145).
Section 123.108	Source emissions monitoring requirements.	11/1/97	6/6/00, 65 FR 35840	(c)(145).
Section 123.109	Source emissions reporting requirements.	11/1/97	6/6/00, 65 FR 35840	(c)(145).
Section 123.110	Source compliance requirements	11/1/97	6/6/00, 65 FR 35840	(c)(145).
Section 123.111	Failure to meet source compliance requirements.	11/1/97	6/6/00, 65 FR 35840	(c)(145).
Section 123.112	Source operating permit provision requirements.	11/1/97	6/6/00, 65 FR 35840	(c)(145)
Section 123.113	Source recordkeeping requirements	11/1/97	6/6/00, 65 FR 35840	(c)(145).
Section 123.114	General NO_X allocation provisions	11/1/97	6/6/00, 65 FR 35840	(c)(145).
Section 123.115	Initial NO_X allowance NO_X allocations.	3/11/00	6/6/00, 65 FR 35840	(c)(145).
Section 123.116	Source opt-in provisions	11/1/97	6/6/00, 65 FR 35840	(c)(145).
Section 123.117	New NO_X affected source provisions.	11/1/97	6/6/00, 65 FR 35840	(c)(145).
Section 123.118	Emission reduction credit provisions	11/1/97	6/6/00, 65 FR 35840	(c)(145).
Section 123.119	Bonus NO_X allowance awards	11/1/97	6/6/00, 65 FR 35840	(c)(145).
Section 123.120	Audit	11/1/97	6/6/00, 65 FR 35840	(c)(145).
Appendix E [Chart]	Appendix E [NO_X Allowances Chart]	3/11/00	6/6/00, 65 FR 35840	(c)(145).
Chapter 126—Standard for Motor Fuels				
Subchapter A—Oxygenate Content of Gasoline				
Section 126.101	General	8/19/95	12/17/99, 64 FR 70589	(c)(142).
Section 126.102	Sampling and testing	8/19/95	12/17/99, 64 FR 70589	(c)(142).
Section 126.103	Recordkeeping and reporting	8/19/95	12/17/99, 64 FR 70589	(c)(142).
Section 126.104	Labeling requirements	8/19/95	12/17/99, 64 FR 70589	(c)(142).

(1) EPA-APPROVED PENNSYLVANIA REGULATIONS—Continued

State citation	Title/subject	State effective date	EPA approval date	Additional explanation/ § 52.2063 citation
Subchapter C—Gasoline Volatility Requirements				
Section 126.301 (a) through (c).	Compliant fuel requirement	11/1/97	6/8/98, 63 FR 31116	(c)(131).
Section 126.302 (Except Paragraph (a)(6) pertaining to RFG).	Recordkeeping and reporting	11/1/97	6/8/98, 63 FR 31116	(c)(131).
Section 126.303(a)	Compliance and test methods	11/1/97	6/8/98, 63 FR 31116	(c)(131).
Subchapter D—Motor Vehicle Emissions Control Program				
General Provisions				
Section 126.401	Purpose	12/5/98	12/28/99, 64 FR 72564	(c)(141)(i)(C).
Section 126.402	NLEV scope and applicability	12/5/98	12/28/99, 64 FR 72564	(c)(141)(i)(C).
Pennsylvania Clean Vehicles Program				
Section 126.411	General Requirements	12/5/98	12/28/99, 64 FR 72564	(c)(141)(i)(C).
Section 126.412	Emission requirements	12/5/98	12/28/99, 64 FR 72564	(c)(141)(i)(C).
Section 126.413	Exemptions	12/5/98	12/28/99, 64 FR 72564	(c)(141)(i)(C).
Applicable Motor Vehicle Testing				
Section 126.421	New motor vehicle certification testing.	12/5/98	12/28/99, 64 FR 72564	(c)(141)(i)(C).
Section 126.422	New motor vehicle compliance testing.	12/5/98	12/28/99, 64 FR 72564	(c)(141)(i)(C).
Section 126.423	Assembly line testing	12/5/98	12/28/99, 64 FR 72564	(c)(141)(i)(C).
Section 126.424	In-use motor vehicle enforcement testing.	12/5/98	12/28/99, 64 FR 72564	(c)(141)(i)(C).
Section 126.425	In-use surveillance testing	12/5/98	12/28/99, 64 FR 72564	(c)(141)(i)(C).
Motor Vehicle Manufacturers' Obligations				
Section 126.431	Warranty and recall	12/5/98	12/28/99, 64 FR 72564	(c)(141)(i)(C).
Section 126.432	Reporting requirements	12/5/98	12/28/99, 64 FR 72564	(c)(141)(i)(C).
Motor Vehicle Dealer Responsibilities				
Section 126.441	Responsibilities of motor vehicle dealers.	12/5/98	12/28/99, 64 FR 72564	(c)(141)(i)(C).
Chapter 127—Construction, Modification, Reactivation, and Operation of Sources				
Subchapter A—General				
Section 127.1	Purpose	11/26/94	7/30/96, 61 FR 39597	(c)(110)(i)(C).
Section 127.3	Operational flexibility	11/26/94	7/30/96, 61 FR 39597	(c)(110)(i)(C).
Subchapter B—Plan Approval Requirements				
Section 127.11	Plan approval requirements	11/26/94	7/30/96, 61 FR 39597	(c)(110)(i)(C).
Section 127.11a	Reactivation of sources	11/26/94	7/30/96, 61 FR 39597	(c)(110)(i)(C).
Section 127.12	Content of applications	11/26/94	7/30/96, 61 FR 39597	(c)(110)(i)(C).
Section 127.12a	Compliance review	11/26/94	7/30/96, 61 FR 39597	(c)(110)(i)(C).
Section 127.12b	Plan approval terms and conditions	11/26/94	7/30/96, 61 FR 39597	(c)(110)(i)(C).
Section 127.12c	Plan approval reporting requirements.	11/26/94	7/30/96, 61 FR 39597	(c)(110)(i)(C).
Section 127.13	Extensions	11/26/94	7/30/96, 61 FR 39597	(c)(110)(i)(C).
Section 127.13a	Plan approval changes for cause	11/26/94	7/30/96, 61 FR 39597	(c)(110)(i)(C).
Section 127.13b	Denial of Plan approval application	11/26/94	7/30/96, 61 FR 39597	(c)(110)(i)(C).
Section 127.13c	Notice of basis for certain plan approval decisions.	11/26/94	7/30/96, 61 FR 39597	(c)(110)(i)(C).
Section 127.14	Exemptions	11/26/94	7/30/96, 61 FR 39597	(c)(110)(i)(C).
Section 127.25	Compliance requirement	11/26/94	7/30/96, 61 FR 39597	(c)(110)(i)(C).
Section 127.32	Transfer of plan approvals	11/26/94	7/30/96, 61 FR 39597	(c)(110)(i)(C).
Section 127.35	Maximum achievable control technology standards for hazardous air pollutants.	11/26/94	7/30/96, 61 FR 39597	(c)(110)(i)(C).

(1) EPA-APPROVED PENNSYLVANIA REGULATIONS—Continued

State citation	Title/subject	State effective date	EPA approval date	Additional explanation/ § 52.2063 citation
Section 127.36	Health risk-based emission standards and operating practice requirements.	11/26/94	7/30/96, 61 FR 39597	(c)(110)(i)(C).
Section 127.44	Public Notice	11/26/94	7/30/96, 61 FR 39597	(c)(110)(i)(C).
Section 127.45	Contents of notice	11/26/94	7/30/96, 61 FR 39597	(c)(110)(i)(C).
Section 127.46	Filing protests	8/13/83	7/27/84, 49 FR 30183	(c)(60).
Section 127.47	Consideration of protests	11/26/94	7/30/96, 61 FR 39597	(c)(110)(i)(C).
Section 127.48	Conferences and hearings	8/13/83	7/27/84, 49 FR 30183	(c)(60).
Section 127.49	Conference or hearing procedure	11/26/94	7/30/96, 61 FR 39597	(c)(110)(i)(C).
Section 127.50	Conference or hearing record	11/26/94	7/30/96, 61 FR 39597	(c)(110)(i)(C).
Section 127.51	Plan approval disposition	11/26/94	7/30/96, 61 FR 39597	(c)(110)(i)(C).
Subchapter D—Prevention of Significant Deterioration of Air Quality				
Section 127.81	Purpose	6/18/83	8/21/84, 49 FR 33127	(c)(57).
Section 127.82	Scope	6/18/83	8/21/84, 49 FR 33127	(c)(57).
Section 127.83	Adoption of Program	6/18/83	8/21/84, 49 FR 33127	(c)(57).
Subchapter E—New Source Review				
Section 127.201	General requirements	1/15/94	12/9/97, 62 FR 64722	(c)(107).
Section 127.202	Effective date	1/15/94	12/9/97, 62 FR 64722	(c)(107).
Section 127.203	Facilities subject to special permit requirements.	1/15/94	12/9/97, 62 FR 64722	(c)(107).
Section 127.204	Emissions subject to this subchapter.	1/15/94	12/9/97, 62 FR 64722	(c)(107).
Section 127.205	Special permit requirements	1/15/94	12/9/97, 62 FR 64722	(c)(107).
Section 127.206	ERC general requirements	1/15/94	12/9/97, 62 FR 64722	(c)(107).
Section 127.207	ERC generation and creation	1/15/94	12/9/97, 62 FR 64722	(c)(107).
Section 127.208	ERC use and transfer requirements	1/15/94	12/9/97, 62 FR 64722	(c)(107).
Section 127.209	ERC registry system	1/15/94	12/9/97, 62 FR 64722	(c)(107).
Section 127.210	Offset ratios	1/15/94	12/9/97, 62 FR 64722	(c)(107).
Section 127.211	Applicability determination	1/15/94	12/9/97, 62 FR 64722	(c)(107).
Section 127.212	Portable facilities	1/15/94	12/9/97, 62 FR 64722	(c)(107).
Section 127.213	Construction and demolition	1/15/94	12/9/97, 62 FR 64722	(c)(107).
Section 127.214	Exemption	1/15/94	12/9/97, 62 FR 64722	(c)(107).
Section 127.215	Reactivation	1/15/94	12/9/97, 62 FR 64722	(c)(107).
Section 127.216	Circumvention	1/15/94	12/9/97, 62 FR 64722	(c)(107).
Section 127.217	Clean Air Act Titles III–V applicability.	1/15/94	12/9/97, 62 FR 64722	(c)(107).
Subchapter F—Operating Permit Requirements				
General				
Section 127.401	Scope	11/26/94	7/30/96, 61 FR 39597	(c)(110)(i)(C).
Section 127.402	General provisions	11/26/94	7/30/96, 61 FR 39597	(c)(110)(i)(C).
Section 127.403	Permitting of sources operating lawfully without a permit.	11/26/94	7/30/96, 61 FR 39597	(c)(110)(i)(C).
Section 127.404	Compliance schedule for repermitting.	11/26/94	7/30/96, 61 FR 39597	(c)(110)(i)(C).
Permit Applications				
Section 127.411	Content of applications.	11/26/94	7/30/96, 61 FR 39597	(c)(110)(i)(C).
Section 127.412	Compliance review forms	11/26/94	7/30/96, 61 FR 39597	(c)(110)(i)(C).
Section 127.413	Municipal notification	11/26/94	7/30/96, 61 FR 39597	(c)(110)(i)(C).
Section 127.414	Supplemental information	11/26/94	7/30/96, 61 FR 39597	(c)(110)(i)(C).
Review of Applications				
Section 127.421	Review of Applications	11/26/94	7/30/96, 61 FR 39597	(c)(110)(i)(C).
Section 127.422	Denial of permits	11/26/94	7/30/96, 61 FR 39597	(c)(110)(i)(C).
Section 127.423	Notice of basis for certain operating permit decisions.	11/26/94	7/30/96, 61 FR 39597	(c)(110)(i)(C).
Section 127.424	Public notice	11/26/94	7/30/96, 61 FR 39597	(c)(110)(i)(C).
Section 127.425	Contents of notice	11/26/94	7/30/96, 61 FR 39597	(c)(110)(i)(C).
Section 127.426	Filing protests	11/26/94	7/30/96, 61 FR 39597	(c)(110)(i)(C).
Section 127.427	Consideration of protest	11/26/94	7/30/96, 61 FR 39597	(c)(110)(i)(C).
Section 127.428	Conferences and hearings	11/26/94	7/30/96, 61 FR 39597	(c)(110)(i)(C).
Section 127.429	Conference or hearing procedure	11/26/94	7/30/96, 61 FR 39597	(c)(110)(i)(C).
Section 127.430	Conference or hearing record	11/26/94	7/30/96, 61 FR 39597	(c)(110)(i)(C).

(1) EPA-APPROVED PENNSYLVANIA REGULATIONS—Continued

State citation	Title/subject	State effective date	EPA approval date	Additional explanation/ § 52.2063 citation
Section 127.431	Operating permit disposition	11/26/94	7/30/96, 61 FR 39597	(c)(110)(i)(C).
Operating Permit Conditions				
Section 127.441	Operating permit terms and conditions.	11/26/94	7/30/96, 61 FR 39597	(c)(110)(i)(C).
Section 127.442	Reporting requirements	11/26/94	7/30/96, 61 FR 39597	(c)(110)(i)(C).
Section 127.443	Operating permit requirements	11/26/94	7/30/96, 61 FR 39597	(c)(110)(i)(C).
Section 127.444	Compliance requirements	11/26/94	7/30/96, 61 FR 39597	(c)(110)(i)(C).
Section 127.445	Operating permit compliance schedules.	11/26/94	7/30/96, 61 FR 39597	(c)(110)(i)(C).
Section 127.446	Operating permit duration	11/26/94	7/30/96, 61 FR 39597	(c)(110)(i)(C).
Section 127.447	Alternate operating scenarios	11/26/94	7/30/96, 61 FR 39597	(c)(110)(i)(C).
Section 127.448	Emissions trading at facilities with Federally enforceable emissions cap.	11/26/94	7/30/96, 61 FR 39597	(c)(110)(i)(C).
Section 127.449	De minimis emission increases	11/26/94	7/30/96, 61 FR 39597	(c)(110)(i)(C).
Section 127.450	Administrative operating permit amendments.	11/26/94	7/30/96, 61 FR 39597	(c)(110)(i)(C).
Operating Permit Modifications				
Section 127.461	Operating permit changes for cause	11/26/94	7/30/96, 61 FR 39597	(c)(110)(i)(C).
Section 127.462	Minor operating permit modifications	11/26/94	7/30/96, 61 FR 39597	(c)(110)(i)(C).
Section 127.463	Operating permit revisions to incorporate applicable standards.	11/26/94	7/30/96, 61 FR 39597	(c)(110)(i)(C).
Section 127.464	Transfer of operating permits	11/26/94	7/30/96, 61 FR 39597	(c)(110)(i)(C).
Subchapter H—General Plan Approvals and Operating Permits				
General				
Section 127.601	Scope	11/26/94	7/30/96, 61 FR 39594	(c)(111).
Issuance of General Plan Approvals and General Operating Permits				
Section 127.611	General plan approvals and general operating permits.	11/26/94	7/30/96, 61 FR 39594	(c)(111).
Section 127.612	Public notice and review period	11/26/94	7/30/96, 61 FR 39594	(c)(111).
Use of General Plan Approvals and Permits				
Section 127.621	Application for use of general plan approvals and general operating permits.	11/26/94	7/30/96, 61 FR 39594	(c)(111).
Section 127.622	Compliance with general plan approvals and general operating permits.	11/26/94	7/30/96, 61 FR 39594	(c)(111).
Subchapter I—Plan Approval and Operating Permit Fees				
Section 127.701	General provisions	11/26/94	7/30/96, 61 FR 39597	(c)(110)(i)(C).
Section 127.702	Plan approval fees	11/26/94	7/30/96, 61 FR 39597	(c)(110)(i)(C).
Section 127.703	Operating permit fees under Subchapter F.	11/26/94	7/30/96, 61 FR 39597	(c)(110)(i)(C).
Section 127.707	Failure to pay fee	11/26/94	7/30/96, 61 FR 39597	(c)(110)(i)(C).
Subchapter J—General Conformity				
Section 127.801	Purpose	11/9/96	9/29/97, 62 FR 50870	(c)(126).
Section 127.802	Adoption of Standards	11/9/96	9/29/97, 62 FR 50870	(c)(126).
Chapter 129—Standards for Sources				
Miscellaneous Sources				
Section 129.11	Nitric acid plants	3/20/72	5/31/72, 37 FR 10842	(c)(1).
Section 129.12	Sulfuric acid plants	3/20/72	5/31/72, 37 FR 10842	(c)(1).
Section 129.13	Sulfur recovery plants	3/20/72	5/31/72, 37 FR 10842	(c)(1).
APPENDIX A	Allowable emissions, sulfur oxides—sulfur recovery plants.	4/23/94	3/23/98, 63 FR 13789	(c)(129).
Section 129.14	Open burning operations	8/9/76	8/19/80, 45 FR 55178	(c)(33).

(1) EPA-APPROVED PENNSYLVANIA REGULATIONS—Continued

State citation	Title/subject	State effective date	EPA approval date	Additional explanation/ § 52.2063 citation
Section 129.15	Coke pushing operations	8/29/77, 12/31/77	12/17/79, 44 FR 73031	(c)(21); correction published 8/22/80, 45 FR 56060.
Section 129.16	Door maintenance, adjustment and replacement practices.	12/12/77	7/17/79, 44 FR 41429	(c)(19).
Section 129.18	Municipal waste incinerators	10/27/90	6/30/93, 58 FR 34911	(c)(81).
Sources of VOCs				
Section 129.51	General	4/10/99	6/25/01, 66 FR 33645	(c)(155).
Section 129.52	Surface coating processes	6/10/00	7/20/01, 66 FR 37908	(c)(152).
Section 129.54	Seasonal operation of auxiliary incineration equipment.	8/3/91	5/13/93, 58 FR 28362	(c)(79).
Section 129.55	Petroleum refineries—specific sources.	6/20/81	1/19/83, 48 FR 2319	(c)(48).
Section 129.56	Storage tanks greater than 40,000 gallons capacity containing VOCs.	9/5/98	7/26/00, 65 FR 45920	(c)(147).
Section 129.57	Storage tanks less than or equal to 40,000 gallons capacity containing VOCs.	6/20/81	1/19/83, 48 FR 2319	(c)(48).
Section 129.58	Petroleum refineries—fugitive sources.	8/13/83	7/27/84, 49 FR 30183	(c)(60).
Section 129.59	Bulk gasoline terminals	8/3/91	5/13/93, 58 FR 28362	(c)(79).
Section 129.60	Bulk gasoline plants	8/3/91	5/13/93, 58 FR 28362	(c)(79).
Section 129.61	Small gasoline storage tank control (Stage I control).	8/3/91	5/13/93, 58 FR 28362	(c)(79).
Section 129.62	General standards for bulk gasoline terminals, bulk gasoline plants, and small gasoline storage tanks.	5/23/94	12/22/94, 59 FR 65971	(c)(94).
Section 129.63	Degreasing operations	12/22/01	1/16/03, 68 FR 2208	(c)(195)(i)(B)(2).
Section 129.64	Cutback asphalt paving	8/13/83	7/27/84, 49 FR 30183	(c)(60).
Section 129.65	Ethylene production plants	8/1/79	5/20/80	(c)(22).
Section 129.66	Compliance schedules and final compliance dates.	5/23/92	12/22/94, 59 FR 65971	(c)(94).
Section 129.67	Graphic arts systems	9/5/98	7/26/00, 65 FR 45920	(c)(147).
Section 129.68	Manufacture of synthesized pharmaceutical products.	8/3/91	5/13/93, 58 FR 28362	(c)(79).
Section 129.69	Manufacture of pneumatic rubber tires.	5/23/92	12/22/94, 59 FR 65971	(c)(94).
Section 129.71	Synthetic organic chemical and polymer manufacturing—fugitive sources.	5/23/92	12/22/94, 59 FR 65971	(c)(94).
Section 129.72	Manufacture of surface active agents.	5/23/92	12/22/94, 59 FR 65971	(c)(94).
Section 129.73	Aerospace manufacturing and rework.	4/10/99	6/25/01, 66 FR 33645	(c)(155).
Section 129.75	Mobile equipment repair and refinishing.	11/27/99	8/14/00, 65 FR 49501	(c)(148).
Mobile Sources				
Section 129.81	Organic liquid cargo vessel loading and ballasting.	9/28/91	9/28/93, 58 FR 50517	(c)(84).
Section 129.82	Control of VOCs from gasoline dispensing facilities (Stage II).	4/10/99	5/21/01, 66 FR 27875	(c)(153).
Stationary Sources of NO_X and VOCs				
Section 129.91	Control of major sources of NO_X and VOCs.	6/10/00	7/20/01, 66 FR 37908	(c)(152).
Section 129.92	RACT proposal requirements	4/23/94	3/23/98, 63 FR 13789	(c)(129).
Section 129.93 [Except for 129.93(c)(6 & 7)].	Presumptive RACT emission limitations.	4/23/94	3/23/98, 63 FR 13789	(c)(129).
Section 129.94	NO_X RACT emission averaging general requirements.	4/23/94	3/23/98, 63 FR 13789	(c)(129).
Section 129.95	Recordkeeping	4/23/94	3/23/98, 63 FR 13789	(c)(129).
Wood Furniture Manufacturing Operations				
Section 129.101	General provisions and applicability	6/10/00	7/20/01, 66 FR 37908	(c)(152).
Section 129.102	Emission standards	6/10/00	7/20/01, 66 FR 37908	(c)(152).
Section 129.103	Work practice standards	6/10/00	7/20/01, 66 FR 37908	(c)(152).

(1) EPA-APPROVED PENNSYLVANIA REGULATIONS—Continued

State citation	Title/subject	State effective date	EPA approval date	Additional explanation/ § 52.2063 citation
Section 129.104	Compliance procedures and monitoring requirements.	6/10/00	7/20/01, 66 FR 37908	(c)(152).
Section 129.105	Recordkeeping requirements	6/10/00	7/20/01, 66 FR 37908	(c)(152).
Section 129.106	Reporting requirements	6/10/00	7/20/01, 66 FR 37908	(c)(152).
Section 129.107	Special provisions for facilities using an emissions averaging approach.	6/10/00	7/20/01, 66 FR 37908	(c)(152).
Additional NO_X Requirements				
Section 129.201	Boilers	12/11/04	9/29/06, 71 FR 57428	SIP-effective date is 10/30/06.
Section 129.202	Stationary combustion turbines	12/11/04	9/29/06, 71 FR 57428	SIP-effective date is 10/30/06.
Section 129.203	Stationary internal combustion engines.	12/11/04	9/29/06, 71 FR 57428	SIP-effective date is 10/30/06.
Section 129.204	Emission accountability	12/11/04	9/29/06, 71 FR 57428	SIP-effective date is 10/30/06.
Section 129.205	Zero emission renewable energy production credit.	12/11/04	9/29/06, 71 FR 57428	SIP-effective date is 10/30/06.
Chapter 130—Standards for Products				
Subchapter A—Portable Fuel Containers				
Section 130.101	Applicability	10/5/02	12/8/04, 69 FR 70893	(c)(229).
Section 130.102	Definitions	10/5/02	12/8/04, 69 FR 70893	(c)(229).
Section 130.103	Performance Standards for portable fuel containers and spill-proof spouts.	10/5/02	12/8/04, 69 FR 70893	(c)(229).
Section 130.104	Exemptions	10/5/02	12/8/04, 69 FR 70893	(c)(229).
Section 130.105	Innovative products	10/5/02	12/8/04, 69 FR 70893	(c)(229).
Section 130.106	Administrative requirements	10/5/02	12/8/04, 69 FR 70893	(c)(229).
Section 130.107	Variances	10/5/02	12/8/04, 69 FR 70893	(c)(229).
Section 130.108	Test procedures	10/5/02	12/8/04, 69 FR 70893	(c)(229).
Subchapter B—Consumer Products				
General Provisions				
Section 130.201	Applicability	10/5/02	12/8/04, 69 FR 70895	(c)(230).
Section 130.202	Definitions	10/5/02	12/8/04, 69 FR 70895	(c)(230).
Standard				
Section 130.211	Table of standards	10/5/02	12/8/04, 69 FR 70895	(c)(230).
Section 130.212	Products diluted prior to use	10/5/02	12/8/04, 69 FR 70895	(c)(230).
Section 130.213	Products registered under FIFRA	10/5/02	12/8/04, 69 FR 70895	(c)(230).
Section 130.214	Requirements for charcoal lighter materials..	10/5/02	12/8/04, 69 FR 70895	(c)(230).
Section 130.215	Requirements for aerosol adhesives	10/5/02	12/8/04, 69 FR 70895	(c)(230).
Section 130.216	Requirements for floor wax strippers	10/5/02	12/8/04, 69 FR 70895	(c)(230).
Exemptions				
Section 130.331	Products for shipment and use outside this Commonwealth.	10/5/02	12/8/04, 69 FR 70895	(c)(230).
Section 130.332	Antiperspirants and deodorants	10/5/02	12/8/04, 69 FR 70895	(c)(230).
Section 130.333	LVP–VOC	10/5/02	12/8/04, 69 FR 70895	(c)(230).
Section 130.334	Products registered under FIFRA	10/5/02	12/8/04, 69 FR 70895	(c)(230).
Section 130.335	Air fresheners	10/5/02	12/8/04, 69 FR 70895	(c)(230).
Section 130.336	Adhesives	10/5/02	12/8/04, 69 FR 70895	(c)(230).
Section 130.337	Bait station insecticides	10/5/02	12/8/04, 69 FR 70895	(c)(230).
Innovative Products				
Section 130.351	Innovative products exemption	10/5/02	12/8/04, 69 FR 70895	(c)(230).
Section 130.352	Request for exemption	10/5/02	12/8/04, 69 FR 70895	(c)(230).
Administrative Requirements				
Section 130.371	Code-dating	10/5/02	12/8/04, 69 FR 70895	(c)(230).
Section 130.372	Most restrictive limit	10/5/02	12/8/04, 69 FR 70895	(c)(230).
Section 130.373	Additional labeling requirements for aerosol adhesives.	10/5/02	12/8/04, 69 FR 70895	(c)(230).

(1) EPA-APPROVED PENNSYLVANIA REGULATIONS—Continued

State citation	Title/subject	State effective date	EPA approval date	Additional explanation/ § 52.2063 citation
Reporting Requirements				
Section 130.391	Required reporting of information to the Department.	10/5/02	12/8/04, 69 FR 70895	(c)(230).
Section 130.392	Confidentiality	10/5/02	12/8/04, 69 FR 70895	(c)(230).
Variances				
Section 130.411	Application for variance	10/5/02	12/8/04, 69 FR 70895	(c)(230).
Section 130.412	Variance orders	10/5/02	12/8/04, 69 FR 70895	(c)(230).
Section 130.413	Termination of variance	10/5/02	12/8/04, 69 FR 70895	(c)(230).
Section 130.414	Modification of variance	10/5/02	12/8/04, 69 FR 70895	(c)(230).
TEST METHODS				
Section 130.431	Testing for compliance	10/5/02	12/8/04, 69 FR 70895	(c)(230).
ACP for Consumer Products				
Section 130.451	Alternative methods of compliance	10/5/02	12/8/04, 69 FR 70895	(c)(230)
Section 130.452	Exemption	10/5/02	12/8/04, 69 FR 70895	(c)(230).
Section 130.453	Request for exemption	10/5/02	12/8/04, 69 FR 70895	(c)(230).
Section 130.454	Application for an ACP	10/5/02	12/8/04, 69 FR 70895	(c)(230).
Section 130.455	Recordkeeping and availability of requested information.	10/5/02	12/8/04, 69 FR 70895	(c)(230).
Section 130.456	Surplus reductions and surplus trading.	10/5/02	12/8/04, 69 FR 70895	(c)(230).
Section 130.457	Limited-use surplus reduction credits for early reformulations of ACP products.	10/5/02	12/8/04, 69 FR 70895	(c)(230).
Section 130.458	Reconciliation of shortfalls	10/5/02	12/8/04, 69 FR 70895	(c)(230).
Section 130.459	Notification of modifications to an ACP by the responsible ACP party.	10/5/02	12/8/04, 69 FR 70895	(c)(230).
Section 130.460	Modifications that require Department preapproval.	10/5/02	12/8/04, 69 FR 70895	(c)(230).
Section 130.461	Other modifications	10/5/02	12/8/04, 69 FR 70895	(c)(230).
Section 130.462	Modification of an ACP by the Department.	10/5/02	12/8/04, 69 FR 70895	(c)(230).
Section 130.463	Cancellation of an ACP	10/5/02	12/8/04, 69 FR 70895	(c)(230).
Section 130.464	Treatment of information	10/5/02	12/8/04, 69 FR 70895	(c)(230).
Section 130.465	Other applicable requirements	10/5/02	12/8/04, 69 FR 70895	(c)(230).
Public Hearing Requirements				
Section 130.471	Public hearings	10/5/02	12/8/04, 69 FR 70895	(c)(230).
Subchapter C—Architectural and Industrial Maintenance Coatings				
Section 130.601	Applicability	10/25/03	11/23/04, 69 FR 68080	(c)(227).
Section 130.602	Definitions	10/25/03	11/23/04, 69 FR 68080	(c)(227).
Section 130.603	Standards	10/25/03	11/23/04, 69 FR 68080	(c)(227).
Section 130.604	Container labeling requirements	10/25/03	11/23/04, 69 FR 68080	(c)(227).
Section 130.605	Reporting requirements	10/25/03	11/23/04, 69 FR 68080	(c)(227).
Section 130.606	Application for variance	10/25/03	11/23/04, 69 FR 68080	(c)(227).
Section 130.607	Variance orders	10/25/03	11/23/04, 69 FR 68080	(c)(227).
Section 130.608	Termination of variance	10/25/03	11/23/04, 69 FR 68080	(c)(227).
Section 130.609	Extension, modification or revocation of variance.	10/25/03	11/23/04, 69 FR 68080	(c)(227).
Section 130.610	Public hearings	10/25/03	11/23/04, 69 FR 68080	(c)(227).
Section 130.611	Compliance provisions and test methods.	10/25/03	11/23/04, 69 FR 68080	(c)(227).
Chapter 131—Ambient Air Quality Standards				
Section 131.1	Purpose	3/20/72	5/31/72, 37 FR 10842	(c)(1).
Section 131.2	National Ambient Air Quality Standards.	3/20/72	5/31/72, 37 FR 10842	(c)(1).
Section 131.3	Ambient air quality standards	8/13/83	7/27/84, 49 FR 30183	(c)(60); Amendment removed a lead standard provision. The remaining standards are not SIP-related.

(1) EPA-APPROVED PENNSYLVANIA REGULATIONS—Continued

State citation	Title/subject	State effective date	EPA approval date	Additional explanation/ § 52.2063 citation
Section 131.4	Application of ambient air quality standards.	3/20/72	5/31/72, 37 FR 10842	(c)(1).
Chapter 135—Reporting of Sources				
General				
Section 135.1	Definitions	3/20/72	5/31/72, 37 FR 10842	(c)(1).
Section 135.2	Applicability [of sources]	3/20/72	5/31/72, 37 FR 10842	(c)(1).
Section 135.3	Reporting	3/20/72	5/31/72, 37 FR 10842	(c)(1).
Section 135.4	Reporting forms and guides	3/20/72	5/31/72, 37 FR 10842	(c)(1).
Section 135.5	Recordkeeping	10/10/92	1/12/95, 60 FR 2081	(c)(96).
Emission Statements				
Section 135.21	Emission statements	10/10/92	1/12/95, 60 FR 2081	(c)(96).
Chapter 137—Air Pollution Episodes				
General				
Section 137.1	Purpose	1/28/72	5/31/72, 37 FR 10842	(c)(1).
Section 137.2	Monitoring facilities	1/28/72	5/31/72, 37 FR 10842	(c)(1).
Section 137.3	Episode criteria	6/9/90	6/16/93, 58 FR 33203	(c)(75).
Section 137.4	Standby plans	12/27/97	6/11/02, 67 FR 39854	(c)(189).
Section 137.5	Implementation of emission reduction procedures.	1/28/72	5/31/72, 37 FR 10842	(c)(1).
Level Actions				
Section 137.11	Forecast level actions	1/28/72	5/31/72, 37 FR 10842	(c)(1).
Section 137.12	Alert level actions	1/28/72	5/31/72, 37 FR 10842	(c)(1).
Section 137.13	Warning level actions	1/28/72	5/31/72, 37 FR 10842	(c)(1).
Section 137.14	Emergency level actions	1/28/72	5/31/72, 37 FR 10842	(c)(1).
Chapter 139—Sampling and Testing				
Subchapter A—Sampling and Testing Methods and Procedures				
General				
Section 139.1	Sampling facilities	3/20/72	5/31/72, 37 FR 10842	(c)(1).
Section 139.2	Sampling by others	3/20/72	5/31/72, 37 FR 10842	(c)(1).
Section 139.3	General requirements	8/1/79	8/8/79, 44 FR 46465	(c)(20); Correction published 1/23/80 (45 FR 5303).
Section 139.4	References	6/10/00	7/20/01, 66 FR 37908	(c)(152).
Section 139.5	Revisions to the source testing manual and continuous source monitoring manual.	11/26/94	7/30/96, 61 FR 39597	(c)(110)(i)(D).
Stationary Sources				
Section 139.11	General requirements	3/20/72	5/31/72, 37 FR 10842	(c)(1).
Section 139.12	Emissions of particulate matter	3/7/98	6/11/02, 67 FR 39854	(c)(189).
Section 139.13 (Except Provisions applicable to H_2S and TRS).	Emissions of SO_2, H_2S, TRS and NO_2.	11/26/94	7/30/96, 61 FR 39597	(c)(110)(i)(D).
Section 139.14	Emissions of VOCs	6/10/00	7/20/01, 66 FR 37908	(c)(152).
Section 139.16	Sulfur in fuel oil	8/13/83	7/27/84, 49 FR 30183	(c)(60).
Section 139.17	General requirements	6/20/81	1/19/83, 48 FR 2319	(c)(48).
Section 139.18	Calculation of alternative opacity limitations.	6/20/81	1/19/83, 48 FR 2319	(c)(48).
Ambient Levels of Air Contaminants				
Section 139.31	General	3/20/72	5/31/72, 37 FR 10842	(c)(1).
Section 139.32	Sampling and analytical procedures	11/26/94	7/30/96, 61 FR 39597	(c)(110)(i)(D).
Section 139.33	Incorporation of Federal procedures	3/20/72	5/31/72, 37 FR 10842	(c)(1).

(1) EPA-APPROVED PENNSYLVANIA REGULATIONS—Continued

State citation	Title/subject	State effective date	EPA approval date	Additional explanation/ § 52.2063 citation
Subchapter B—Monitoring Duties of Certain Sources				
General				
Section 139.51	Purpose	8/29/77	7/17/79, 44 FR 41429	(c)(19).
Section 139.52	Monitoring methods and techniques	8/29/77	7/17/79, 44 FR 41429	(c)(19).
Section 139.53	Filing monitoring reports	8/13/83	7/27/84, 49 FR 30183	(c)(60).
Subchapter C—Requirements for Continuous In-Stack Monitoring for Stationary Sources				
Section 139.101	General Requirements	3/7/98	6/11/02, 67 FR 39854	(c)(189).
Section 139.102	References	11/26/94	7/30/96, 61 FR 39597	(c)(110)(i)(D).
Section 139.103	Opacity monitoring requirements	11/26/94	7/30/96, 61 FR 39597	(c)(110)(i)(D).
Section 139.111	Waste incinerator monitoring requirements.	12/27/97	6/11/02, 67 FR 39854	(c)(189).
Chapter 141—Alternate Standards				
Section 141.1	Imposing alternate standards authorized.	5/14/88	9/17/92, 57 FR 42894	(c)(73).
Chapter 145—Interstate Pollution Transport Reduction				
Subchapter A—NO_X Budget Trading Program				
General Provisions				
Section 145.1	Purpose	9/23/00	8/21/01, 66 FR 43795	(c)(168).
Section 145.2	Definitions	9/23/00	8/21/01, 66 FR 43795	(c)(168).
Section 145.3	Measurements, abbreviations and acronyms.	9/23/00	8/21/01, 66 FR 43795	(c)(168).
Section 145.4	Applicability	9/23/00	8/21/01, 66 FR 43795	(c)(168).
Section 145.5	Retired unit exemption	9/23/00	8/21/01, 66 FR 43795	(c)(168).
Section 145.6	Standard requirements	9/23/00	8/21/01, 66 FR 43795	(c)(168).
Section 145.7	Computation of time	9/23/00	8/21/01, 66 FR 43795	(c)(168).
NO_X Account				
Section 145.10	Authorization and responsibilities of the NO_X authorized account representative.	9/23/00	8/21/01, 66 FR 43795	(c)(168).
Section 145.11	Alternate NO_X authorized account representative.	9/23/00	8/21/01, 66 FR 43795	(c)(168).
Section 145.12	Changing the NO_X authorized account representative; and changes in the Alternate NO_X authorized account representative; changes in the owners and operators.	9/23/00	8/21/01, 66 FR 43795	(c)(168).
Section 145.13	Account certificate of representation	9/23/00	8/21/01, 66 FR 43795	(c)(168).
Section 145.14	Objections concerning the NO_X authorized account representative.	9/23/00	8/21/01, 66 FR 43795	(c)(168).
Compliance Certification				
Section 145.30	Compliance certification report	9/23/00	8/21/01, 66 FR 43795	(c)(168).
Section 145.31	Department's action on compliance certifications.	9/23/00	8/21/01, 66 FR 43795	(c)(168).
NO_X Allowance Allocations				
Section 145.40	State Trading Program budget	9/23/00	8/21/01, 66 FR 43795	(c)(168).
Section 145.41	Timing Requirements for NO_X allowance allocations.	9/23/00	8/21/01, 66 FR 43795	(c)(168).
Section 145.42	NO_X Allowance allocations	12/11/04	9/29/06, 71 FR 57428	Revised; SIP-effective date is 10/30/06.
Section 145.43	Compliance supplement pool	9/23/00	8/21/01, 66 FR 43795	(c)(168).
Accounting Process for Deposit Use and Transfer of Allowances				
Section 145.50	NO_X Allowance Tracking System accounts.	9/23/00	8/21/01, 66 FR 43795	(c)(168).

(1) EPA-APPROVED PENNSYLVANIA REGULATIONS—Continued

State citation	Title/subject	State effective date	EPA approval date	Additional explanation/ § 52.2063 citation
Section 145.51	Establishment of accounts	9/23/00	8/21/01, 66 FR 43795	(c)(168).
Section 145.52	NO_X Allowance Tracking System responsibilities of NO_X authorized account representative.	9/23/00	8/21/01, 66 FR 43795	(c)(168).
Section 145.53	Recordation of NO_X allowance allocations.	9/23/00	8/21/01, 66 FR 43795	(c)(168).
Section 145.54	Compliance	9/23/00	8/21/01, 66 FR 43795	(c)(168).
Section 145.55	Banking	9/23/00	8/21/01, 66 FR 43795	(c)(168).
Section 145.56	Account error	9/23/00	8/21/01, 66 FR 43795	(c)(168).
Section 145.57	Closing of general accounts	9/23/00	8/21/01, 66 FR 43795	(c)(168).
NO_X Allowance Transfers				
Section 145.60	Submission of NO_X allowance transfers.	9/23/00	8/21/01, 66 FR 43795	(c)(168).
Section 145.61	NO_X transfer recordation	9/23/00	8/21/01, 66 FR 43795	(c)(168).
Section 145.62	Notification	9/23/00	8/21/01, 66 FR 43795	(c)(168).
Recording and Recordkeeping Requirements				
Section 145.70	General monitoring requirements	9/23/00	8/21/01, 66 FR 43795	(c)(168).
Section 145.71	Initial certification and recertification procedures.	9/23/00	8/21/01, 66 FR 43795	(c)(168).
Section 145.72	Out of control periods	9/23/00	8/21/01, 66 FR 43795	(c)(168).
Section 145.73	Notifications	9/23/00	8/21/01, 66 FR 43795	(c)(168).
Section 145.74	Recordkeeping and reporting	9/23/00	8/21/01, 66 FR 43795	(c)(168).
Section 145.75	Petitions	9/23/00	8/21/01, 66 FR 43795	(c)(168).
Section 145.76	Additional requirements to provide heat input data.	9/23/00	8/21/01, 66 FR 43795	(c)(168).
Opt-In Process				
Section 145.80	Applicability for opt-in sources	9/23/00	8/21/01, 66 FR 43795	(c)(168).
Section 145.81	Opt-in source general provisions	9/23/00	8/21/01, 66 FR 43795	(c)(168).
Section 145.82	NO_X authorized account representative for opt-in sources.	9/23/00	8/21/01, 66 FR 43795	(c)(168).
Section 145.83	Applying for a NO_X budget opt-in approval.	9/23/00	8/21/01, 66 FR 43795	(c)(168).
Section 145.84	Opt-in process	9/23/00	8/21/01, 66 FR 43795	(c)(168).
Section 145.85	NO_X budget opt-in application contents.	9/23/00	8/21/01, 66 FR 43795	(c)(168).
Section 145.86	Opt-in source withdrawal from NO_X Budget Trading Program.	9/23/00	8/21/01, 66 FR 43795	(c)(168).
Section 145.87	Opt-in unit change in regulatory status.	9/23/00	8/21/01, 66 FR 43795	(c)(168).
Section 145.88	NO_X allowance allocations to opt-in units.	9/23/00	8/21/01, 66 FR 43795	(c)(168).
Emission Reduction Credit Provisions				
Section 145.90	Emission reduction credit provisions	9/23/00	8/21/01, 66 FR 43795	(c)(168).
Interstate Pollution Transport Reduction Requirements				
Section 145.100	Applicability to upwind states	9/23/00	8/21/01, 66 FR 43795	(c)(168).
Subchapter B—Emissions of NO_X from Stationary Internal Combustion Engines				
Section 145.111	Applicability	12/11/04	9/29/06, 71 FR 57428	New Section SIP-effective date is 10/30/06.
Section 145.112	Definitions	12/11/04	9/29/06, 71 FR 57428	New Section SIP-effective date is 10/30/06.
Section 145.113	Standard requirements	12/11/04	9/29/06, 71 FR 57428	New Section SIP-effective date is 10/30/06.
Subchapter C—Emissions of NO_X from Cement Manufacturing				
Section 145.141	Applicability	12/11/04	9/29/06, 71 FR 57428	New Section SIP-effective date is 10/30/06.
Section 145.142	Definitions	12/11/04	9/29/06, 71 FR 57428	New Section SIP-effective date is 10/30/06.

(1) EPA-APPROVED PENNSYLVANIA REGULATIONS—Continued

State citation	Title/subject	State effective date	EPA approval date	Additional explanation/ § 52.2063 citation
Section 145.143	Standard requirements	12/11/04	9/29/06, 71 FR 57428	New Section SIP-effective date is 10/30/06.
Title 67—Transportation				
Part I—Department of Transportation Subpart A—Vehicle Code Provisions Article VII—Vehicle Characteristics				
Chapter 175—Vehicle Equipment and Inspection				
Subchapter A—General Provisions				
Section 175.2	Definitions	9/27/97	6/17/99, 64 FR 32411	"Temporary Inspection Approval Indicator" only.
Section 175.2	Definitions	12/3/88	10/6/05, 70 FR 58313	Definitions which apply to safety inspection program in non-I/M counties.
Section 175.3	Application of equipment rules	12/3/88	10/6/05, 70 FR 58313	Applies to safety inspection program in non-I/M counties.
Section 175.4	Vehicles required to be inspected	12/3/88	10/6/05, 70 FR 58313	Applies to safety inspection program in non-I/M counties.
Section 175.6	Annual inspection	12/3/88	10/6/05, 70 FR 58313	Applies to safety inspection program in non-I/M counties.
Section 175.7	Inspection of vehicle reentering this Commonwealth.	12/3/88	10/6/05, 70 FR 58313	Applies to safety inspection program in non-I/M counties.
Section 175.8	Newly purchased vehicles	2/19/94	10/6/05, 70 FR 58313	Applies to safety inspection program in non-I/M counties.
Section 175.11	Coordination of safety and emission inspection.	9/27/97	6/17/99, 64 FR 32411	(c)(139).
Subchapter B—Official Inspection Stations				
Section 175.21	Appointment	12/3/88	10/6/05, 70 FR 58313	Applies to safety inspection program in non-I/M counties.
Section 175.22	Making application	12/3/88	10/6/05, 70 FR 58313	Applies to safety inspection program in non-I/M counties.
Section 175.23(a) and (c)	Approval	12/3/88	10/6/05, 70 FR 58313	Applies to safety inspection program in non-I/M counties.
Section 175.24	Required certificates and station signs.	12/3/88	10/6/05, 70 FR 58313	Applies to safety inspection program in non-I/M counties.
Section 175.25(a), (b)(1), (b)(3), and (c).	Inspection area	12/3/88	10/6/05, 70 FR 58313	Applies to safety inspection program in non-I/M counties.
Section 175.26(a) introductory sentence and (a)(3).	Tools and equipment	9/28/96	10/6/05, 70 FR 58313	Applies to safety inspection program in non-I/M counties.
Section 175.27	Hours	12/3/88	10/6/05, 70 FR 58313	Applies to safety inspection program in non-I/M counties.
Section 175.28 [Except for (c)(2), (g)(2), (g)(3), and (g)(5)–((9)].	Certified Inspection Mechanics	12/3/88	10/6/05, 70 FR 58313.	Applies to safety inspection program in non-I/M counties.
Section 175.29(f)(4)	Obligations and responsibilities of station.	9/27/97	6/17/99, 64 FR 32411	(c)(139).
Section 175.29	Obligations and responsibilities of stations.	9/27/97	10/6/05, 70 FR 58313	Applies to safety inspection program in non-I/M counties (except for (f)(4), which applies to I/M and non-I/M programs).
Section 175.31	Fleet inspection stations	12/3/88	10/6/05, 70 FR 58313	Applies to safety inspection program in non-I/M counties.
Subchapter C—Certificate of Inspection				
Section 175.41(a), (b)(1), (b)(3), (c), (d), (e)(1), (e)(3), (e)(5), and (f)(4).	Procedure	9/27/97	10/6/05, 70 FR 58313	Applies statewide; To I/M program and non-I/M safety inspection program.
Section 175.42	Recording inspection	9/27/97	6/17/99, 64 FR 32411.	
Section 175.43	Security	9/27/97	6/17/99, 64 FR 32411.	
Section 175.44	Ordering certificates of inspection	9/27/97	6/17/99, 64 FR 32411.	
Section 175.45	Violation of use of certificate of inspection.	9/27/97	6/17/99, 64 FR 32411.	

(1) EPA-APPROVED PENNSYLVANIA REGULATIONS—Continued

State citation	Title/subject	State effective date	EPA approval date	Additional explanation/ § 52.2063 citation
Subchapter D—Schedule of Penalties and Suspensions: Official Inspection Stations and Certified Mechanics				
Section 175.51	Cause for suspension	2/19/94	10/6/05, 70 FR 58313	New section; Applies to safety inspection program in non-I/M counties.
Section 175.52	Reapplication	12/3/88	10/6/05, 70 FR 58313	New section; Applies to safety inspection program in non-I/M counties.
Subchapter E—Passenger Cars and Light Trucks				
Section 175.61	Application of subchapter	12/3/88	10/6/05, 70 FR 58313	New section; Applies to safety inspection program in non-I/M counties.
Section 175.72(d)	Fuel systems	12/3/88	10/6/05, 70 FR 58313	New section; Applies to safety inspection program in non-I/M counties.
Section 175.80(d)	Inspection procedure	5/13/99	10/6/05, 70 FR 58313	New section; Applies to safety inspection program in non-I/M counties.
Subchapter H—Motorcycles				
Section 175.141	Application of subchapter	12/3/88	10/6/05, 70 FR 58313	New section; Applies to safety inspection program in non-I/M counties.
Subchapter J—Motor-Driven Cycles and Motorized Pedalcycles				
Section 175.171	Application	12/3/88	10/6/05, 70 FR 58313	New section; Applies to safety inspection program in non-I/M counties.
Subchapter K—Street Rods, Specially Constructed and Reconstructed Vehicles				
Section 175.201	Application of subchapter	12/3/88	10/6/05, 70 FR 58313	New section; Applies to safety inspection program in non-I/M counties.
Section 175.202	Conditions	12/3/88	10/6/05, 70 FR 58313	Applies to safety inspection program in non-I/M counties.
Section 175.220(d) [introductory sentence only].	Inspection procedure	5/13/99	10/6/05, 70 FR 58313	Applies to safety inspection program in non-I/M counties.
Subchapter L—Animal-Drawn Vehicles, Implements of Husbandry and Special Mobile Equipment				
Section 175.221	Application	12/3/88	10/6/05, 70 FR 58313.	
Chapter 177—Enhanced Emission Inspection Program				
Subchapter A—General Provisions				
Section 177.1	Purpose	10/1/97	6/17/99, 64 FR 32411	(c)(139).
Section 177.2	Application of equipment rules	10/1/97	6/17/99, 64 FR 32411	(c)(139).
Section 177.3	Definitions	11/22/03	10/6/05, 70 FR 58313.	
Implementation of Emission Inspection Program				
Section 177.22	Commencement of inspection	11/22/03	10/6/05, 70 FR 58313	Retitled and revised.
Section 177.23	Notification of requirement for emission inspection.	11/22/03	10/6/05, 70 FR 58313.	
Section 177.24	Program evaluation	11/22/03	10/6/05, 70 FR 58313.	
I/M Program				
Section 177.51	Program requirements	11/22/03	10/6/05, 70 FR 58313	Excludes paragraphs (c)(1), (c)(2), and (c)(3), and reference to those paragraphs.
Section 177.52	Emission inspection prerequisites	11/22/03	10/6/05, 70 FR 58313.	
Section 177.53	Vehicle inspection process	11/22/03	10/6/05, 70 FR 58313.	

(1) EPA-APPROVED PENNSYLVANIA REGULATIONS—Continued

State citation	Title/subject	State effective date	EPA approval date	Additional explanation/ § 52.2063 citation
Subchapter B—Subject Vehicles				
Section 177.101	Subject vehicles	11/22/03	10/6/05, 70 FR 58313.	
Section 177.102	Inspection of vehicles reentering this Commonwealth.	9/27/97	6/17/99, 64 FR 32411	(c)(139).
Section 177.103	Used vehicles after sale or resale	9/27/97	6/17/99, 64 FR 32411	(c)(139).
Section 177.104	Vehicles registered in nondesignated areas or other states.	9/27/97	6/17/99, 64 FR 32411	(c)(139).
Section 177.105	Vehicles requiring emission inspection due to change of address.	11/22/03	10/6/05, 70 FR 58313.	
Subchapter C—Emission Test Procedures and Emission Standards				
General				
Section 177.201	General requirements	11/22/03	10/6/05, 70 FR 58313.	
Section 177.202	Emission test equipment	11/22/03	10/6/05, 70 FR 58313.	
Section 177.202a	OBD–I/M check equipment	11/22/03	10/6/05, 70 FR 58313	New section.
Section 177.202b	Equipment for gas cap test and visual inspection.	11/22/03	10/6/05, 70 FR 58313	New section.
Section 177.203	Test procedures	11/22/03	10/6/05, 70 FR 58313.	
Section 177.204	Basis for failure	11/22/03	10/6/05, 70 FR 58313	Retitled and revised.
Recall Provisions				
Section 177.231	Requirements regarding manufacturer recall notices.	9/27/97	6/17/99, 64 FR 32411	(c)(139).
Section 177.232	Compliance with recall notices	9/27/97	6/17/99, 64 FR 32411	(c)(139).
Section 177.233	Failure to comply	9/27/97	6/17/99, 64 FR 32411	(c)(139).
Emission Inspection Report				
Section 177.251	Record of test results	9/27/97	6/17/99, 64 FR 32411	(c)(139).
Section 177.252	Emission inspection report	11/22/03	10/6/05, 70 FR 58313	Retitled and revised.
Section 177.253	Responsibility of the station owner for vehicles which fail the emission inspection.	11/22/03	10/6/05, 70 FR 58313	Retitled and revised.
Retest				
Section 177.271	Procedure	11/22/03	10/6/05, 70 FR 58313.	
Section 177.272	Prerequisites	11/22/03	10/6/05, 70 FR 58313.	
Section 177.273	Content of repair data form	11/22/03	10/6/05, 70 FR 58313.	
Section 177.274	Retest fees	11/22/03	10/6/05, 70 FR 58313.	
Section 177.275	Repair technician training and certification.	11/22/03	10/6/05, 70 FR 58313	New section.
Issuance of Waiver				
Section 177.281	Issuance of waiver	11/22/03	10/6/05, 70 FR 58313.	
Section 177.282	Annual adjustment of minimum waiver expenditure for emission inspection.	11/22/03	10/6/05, 70 FR 58313	Excludes/removes the sentence and partial sentence, ''The minimum expenditure for the first 2 years after commencement of the program in an affected area is $150. Beginning with the 3rd year of the program in an affected area''.
Procedures Relating to Certificates of Emission Inspection				
Section 177.291	Procedures relating to certificates of emission inspection.	11/22/03	10/6/05, 70 FR 58313	Retitled and revised.
Section 177.292	Recording inspection	11/22/03	10/6/05, 70 FR 58313.	
On-Road Testing				
Section 177.301	Authorization to conduct on-road emission testing.	9/27/97	6/17/99, 64 FR 32411	(c)(139).
Section 177.302	On-road testing devices	9/27/97	6/17/99, 64 FR 32411	(c)(139).
Section 177.304	Failure of on-road emission test	11/22/03	10/6/05, 70 FR 58313.	

(1) EPA-APPROVED PENNSYLVANIA REGULATIONS—Continued

State citation	Title/subject	State effective date	EPA approval date	Additional explanation/ § 52.2063 citation
Section 177.305	Failure to produce proof of correction of on-road emission test failure.	9/27/97	6/17/99, 64 FR 32411	(c)(139).
Subchapter D—Official Emission Inspection Station Requirements				
General				
Section 177.401	Appointment	11/22/03	10/6/05, 70 FR 58313.	
Section 177.402	Application	9/27/97	6/17/99, 64 FR 32411	(c)(139).
Section 177.403	Approval of emission inspection station.	9/27/97	6/17/99, 64 FR 32411	(c)(139).
Section 177.404	Required certificates and station signs.	11/22/03	10/6/05, 70 FR 58313.	
Section 177.405	Emission inspection areas	11/22/03	10/6/05, 70 FR 58313.	
Section 177.406	Equipment	11/22/03	10/6/05, 70 FR 58313	Retitled and revised.
Section 177.407	Hours of operation	11/22/03	10/6/05, 70 FR 58313.	
Section 177.408	Certified emission inspectors	11/22/03	10/6/05, 70 FR 58313.	
Obligations and Responsibilities of Station Owners/Agents				
Section 177.421	Obligations and responsibilities of station owners/agents.	11/22/03	10/6/05, 70 FR 58313.	
Section 177.422	Commonwealth emission inspection stations.	11/22/03	10/6/05, 70 FR 58313	Retitled and revised.
Section 177.423	Fleet emission inspection stations	11/22/03	10/6/05, 70 FR 58313	Retitled and revised.
Section 177.424	General emission inspection stations.	11/22/03	10/6/05, 70 FR 58313.	
Section 177.425	Security	11/22/03	10/6/05, 70 FR 58313.	
Section 177.426	Ordering certificates of emission inspection.	9/27/97	6/17/99, 64 FR 32411	(c)(139).
Section 177.427	Violations of use of certificate of emission inspection.	9/27/97	6/17/99, 64 FR 32411	(c)(139).
Quality Assurance				
Section 177.431	Quality assurance	11/22/03	10/6/05, 70 FR 58313.	
Subchapter E—Equipment Manufacturers' and Contractors' Requirements and Obligations				
Equipment Manufacturers' Requirements				
Section 177.501	Equipment approval procedures	11/22/03	10/6/05, 70 FR 58313.	
Section 177.502	Service commitment	11/22/03	10/6/05, 70 FR 58313.	
Section 177.503	Performance commitment	11/22/03	10/6/05, 70 FR 58313.	
Section 177.504	Revocation of approval	9/27/97	6/17/99, 64 FR 32411	(c)(139).
Contractor Obligations				
Section 177.521	Contractor obligations and responsibilities.	11/22/03	10/6/05, 70 FR 58313.	
Subchapter F—Schedule of Penalties and Hearing Procedure				
Schedule of Penalties and Suspensions				
Section 177.601	Definitions	11/22/03	10/6/05, 70 FR 58313	New section.
Section 177.602	Schedule of penalties for emission inspection stations.	11/22/03	10/6/05, 70 FR 58313.	
Section 177.603	Schedule of penalties for emission inspectors.	11/22/03	10/6/05, 70 FR 58313.	
Additional Violations				
Section 177.605	Subsequent violations	11/22/03	10/6/05, 70 FR 58313.	
Section 177.606	Multiple violations	9/27/97	6/17/99, 64 FR 32411	(c)(139).
Departmental Hearing Procedure				
Section 177.651	Notice of alleged violation and opportunity to be heard prior to immediate suspension.	11/22/03	10/6/05, 70 FR 58313	Retitled and revised.

(1) EPA-APPROVED PENNSYLVANIA REGULATIONS—Continued

State citation	Title/subject	State effective date	EPA approval date	Additional explanation/ § 52.2063 citation
Section 177.652	Official documents	9/27/97	6/17/99, 64 FR 32411	(c)(139).
Restoration After Suspension				
Section 177.671	Restoration of certification of an emission inspector after suspension.	9/27/97	6/17/99, 64 FR 32411	(c)(139).
Section 177.672	Restoration of certification of an emission inspection station after suspension.	9/27/97	6/17/99, 64 FR 32411	(c)(139).
Section 177.673	Restoration of certification of certified repair technician after suspension.	9/27/97	6/17/99, 64 FR 32411	(c)(139).
Registration Recall Procedure for Violation of §§ 177.301–177.305 (Relating Toon-Road Resting)				
Section 177.691	Registration Recall Committee	11/22/03	10/6/05, 70 FR 58313.	
Appendix A	Acceleration Simulation Mode: Pennsylvania Procedures, Standards, Equipment Specifications and Quality Control Requirements.	11/22/03	10/6/05, 70 FR 58313	Replaces previous Appendix A.
Appendix B	Department Procedures and Specifications.	11/22/03	10/6/05, 70 FR 58313	Replaces previous Appendix B.

(2) EPA-APPROVED ALLEGHENY COUNTY HEALTH DEPARTMENT (ACHD) REGULATIONS

Article XX or XXI citation	Title/subject	State effective date	EPA approval date	Additional explanation/ § 52.2063 citation
Part A—General				
2101.01	Short Titles	10/20/95	11/14/02, 67 FR 68935	In SIP at 52.2020(c)(92); citation change only at(c)(192).
2101.02.a, .02.c	Declaration of Policy and Purpose	10/20/95	11/14/02, 67 FR 68935	(c)(192).
2101.03	Effective Date and Repealer	10/20/95	11/14/02, 67 FR 68935	In SIP at (c)(92); citation change only at (c)(192).
2101.04	Existing Orders	10/20/95	11/14/02, 67 FR 68935	(c)(192).
2101.05	Existing Permits and Licenses	3/31/98	8/30/04, 69 FR 52831	52.2420(c)(209).
2101.06	Construction and Interpretation	10/20/95	11/14/02, 67 FR 68935	(c)(192).
2101.07 (Except paragraphs .07.c.2 and c.8).	Administration and Organization	10/20/95	11/14/02, 67 FR 68935	(c)(192).
2101.10	Ambient Air Quality Standards (Except: PM10—County & Free silica portion; Pb (1-hr & 8-hr avg.); settled particulates, beryllium, sulfates, fluorides, and hydrogen sulfide).	10/20/95	11/14/02, 67 FR 68935	(c)(192).
2101.11	Prohibition of Air Pollution	10/20/95	11/14/02, 67 FR 68935	(c)(192).
2101.12	Interstate Air Pollution	10/20/95	11/14/02, 67 FR 68935	(c)(192).
2101.13	Nuisances	10/20/95	11/14/02, 67 FR 68935	(c)(192).
2101.14	Circumvention	10/20/95	11/14/02, 67 FR 68935	(c)(192).
2101.20	Definitions	10/20/95	11/14/02, 67 FR 68935	(c)(192).
2101.20	Definitions related to gasoline volatility.	5/15/98, 9/1/99	4/17/01, 66 FR 19724	(c)(151).
2101.20	Definitions	7/10/03	6/24/05, 70 FR 36511.	
Part B—Permits Generally				
2102.01	Certification	10/20/95	11/14/02, 67 FR 68935	(c)(192).
2102.02	Applicability	10/20/95	11/14/02, 67 FR 68935	(c)(192).
2102.03.a through .k	Permits Generally	10/20/95	11/14/02, 67 FR 68935	(c)(192).
2102.04	Installation Permits	10/20/95	11/14/02, 67 FR 68935	(c)(192).
2102.05	Installation Permits for New and Modified Major Sources.	10/20/95	11/14/02, 67 FR 68935	(c)(192).
2102.06	Major Sources Locating In or Impacting a Nonattainment Area.	10/20/95	11/14/02, 67 FR 68935	(c)(192).
2102.08	Emission Offset Registration	10/20/95	11/14/02, 67 FR 68935	(c)(192).
2102.10	Installation Permit Application and Administration Fees.	10/20/95	11/14/02, 67 FR 68935	(c)(192).

(2) EPA-APPROVED ALLEGHENY COUNTY HEALTH DEPARTMENT (ACHD) REGULATIONS—Continued

Article XX or XXI citation	Title/subject	State effective date	EPA approval date	Additional explanation/ § 52.2063 citation
Part C—Operating Permits				
2103.01	Transition	10/20/95	8/30/04, 69 FR 52831	(c)(209).
Subpart 1—Operating Permits (All Major and Minor Permits)				
2103.10.a., b	Applicability, Prohibitions, Records	10/20/95	11/14/02, 67 FR 68935	(c)(192).
2103.11	Applications	10/20/95	8/30/04, 69 FR 52831	(c)(209).
2103.12	Issuance, Standard Conditions	3/31/98	8/30/04, 69 FR 52831	(c)(209).
2103.13	Expiration, Renewals, Reactivation	10/20/95	8/30/04, 69 FR 52831	(c)(209).
2103.14	Revisions, Amendments, Modifications.	1/12/01	8/30/04, 69 FR 52831	(c)(209).
2103.15	Reopenings, Revocations	10/20/95	8/30/04, 69 FR 52831	(c)(209).
Subpart 2—Additional Requirements for Major Permits				
2103.20.b.4	Applicability, Prohibitions, Records	10/20/95	11/14/02, 67 FR 68935	(c)(192).
Part D—Pollutant Emission Standards				
2104.01	Visible Emissions	10/20/95	11/14/02, 67 FR 68935	(c)(192).
2104.02	Particulate Mass Emissions	8/15/97	6/12/98, 63 FR 32126	(c)(133)(i)(B)(*1*); Citation changes approved on 11/12/02 (67 FR 68935) at (c)(192).
2104.03	Sulfur Oxide Emissions	7/10/03	7/21/04, 69 FR 43522	(c)(216)(i)(C).
2104.05	Materials Handling	10/20/95	11/14/02, 67 FR 68935	(c)(192).
2104.06	Violations	10/20/95	11/14/02, 67 FR 68935	(c)(192).
2104.07	Stack Heights	10/20/95	11/14/02, 67 FR 68935	(c)(192).
Part E—Source Emission and Operating Standards				
2105.01	Equivalent Compliance Techniques	7/10/03	6/24/05, 70 FR 36511.	
2105.02	Other Requirements Not Affected	10/20/95	11/14/02, 67 FR 68935	(c)(192).
2105.03	Operation and Maintenance	10/20/95	11/14/02, 67 FR 68935	(c)(192).
2105.04	Temporary Shutdown of Incineration Equipment.	10/20/95	11/14/02, 67 FR 68935	(c)(192).
2105.06	Major Sources of Nitrogen Oxides and Volatile Organic Compounds.	10/20/95	10/7/02, 67 FR 62389	(c)(157).
Subpart 1—VOC Sources				
2105.10	Surface Coating Processes	7/10/03	6/24/05, 70 FR 36511.	
2105.11	Graphic Arts Systems	10/20/95	11/14/02, 67 FR 68935	(c)(192).
2105.12	Volatile Organic Compound Storage Tanks.	10/20/95	11/14/02, 67 FR 68935	(c)(192).
2105.13	Gasoline Loading Facilities	10/20/95	11/14/02, 67 FR 68935	(c)(192).
2105.14	Gasoline Dispensing Facilities—Stage II Control.	7/10/05	1/17/08, 73 FR 3190.	
2105.15	Degreasing Operations	10/20/95	11/14/02, 67 FR 68935	(c)(192).
2105.16	Cutback Asphalt Paving	10/20/95	11/14/02, 67 FR 68935	(c)(192).
2105.17	Ethylene Production Processes	10/20/95	11/14/02, 67 FR 68935	(c)(192).
2105.19	Synthetic Organic Chemical & Polymer Manufacturing—Fugitive Sources.	10/20/95	11/14/02, 67 FR 68935	(c)(192).
Subpart 2—Stag, Coke, and Miscellaneous Sulfur Sources				
2105.20	Slag Quenching	10/20/95	11/14/02, 67 FR 68935	(c)(192).
2105.21	Coke Ovens and Coke Oven Gas	8/15/97	6/12/98, 63 FR 32126	(c)(133); 1. EPA approved revisions effective 7/11/95 on 9/8/98 (63 FR 47434) at (c)(135). 2. EPA approved revisions effective 10/20/95 on 11/14/02 (67 FR 68935) at (c)(192).
2105.22	Miscellaneous Sulfur Emitting Processes.	10/20/95	11/14/02, 67 FR 68935	(c)(192).

(2) EPA-APPROVED ALLEGHENY COUNTY HEALTH DEPARTMENT (ACHD) REGULATIONS—Continued

Article XX or XXI citation	Title/subject	State effective date	EPA approval date	Additional explanation/ § 52.2063 citation
Subpart 3—Incineration and Combustion Sources				
2105.30 (except paragraphs .b.3 and .f).	Incinerators	10/20/95	11/14/02, 67 FR 68935	(c)(192); Section 2105.30.f. is federally enforceable as part of the applicable section 111(d) plan.
Subpart 4—Miscellaneous Fugitive Sources				
2105.40	Permit Source Premises	10/20/95	11/14/02, 67 FR 68935	(c)(192).
2105.41	Non-Permit Premises	10/20/95	11/14/02, 67 FR 68935	(c)(192).
2105.42	Parking Lots and Roadways	10/20/95	11/14/02, 67 FR 68935	(c)(192).
2105.43	Permit Source Transport	10/20/95	11/14/02, 67 FR 68935	(c)(192).
2105.44	Non-Permit Source Transport	10/20/95	11/14/02, 67 FR 68935	(c)(192).
2105.45	Construction and Land Clearing	10/20/95	11/14/02, 67 FR 68935	(c)(192).
2105.46	Mining	10/20/95	11/14/02, 67 FR 68935	(c)(192).
2105.47	Demolition	10/20/95	11/14/02, 67 FR 68935	(c)(192).
2105.48	Areas Subject to Sections 2105.40 Through 2105.47.	10/20/95	11/14/02, 67 FR 68935	(c)(192).
2105.49.a, .b	Fugitive Emissions	10/20/95	11/14/02, 67 FR 68935	(c)(192).
Subpart 5—Open Burning and Abrasive Blasting Sources				
2105.50 (except paragraph .50.d).	Open Burning	10/20/95	11/14/02, 67 FR 68935	(c)(192).
Article XX, Section 533	Abrasive Blasting	10/9/86	10/19/87, 51 FR 38758	(c)(69).
Subpart 7—Miscellaneous VOC Sources				
2105.70	Petroleum Refineries	10/20/95	11/14/02, 67 FR 68935	(c)(192).
2105.71	Pharmaceutical Products	10/20/95	11/14/02, 67 FR 68935	(c)(192).
2105.72	Manufacturer of Pneumatic Rubber Tires.	10/20/95	11/14/02, 67 FR 68935	(c)(192).
2105.74	Aerospace Manufacturing and Rework.	7/10/03	6/24/05, 70 FR 36511.	
2105.75	Mobile Equipment Repair and Refinishing.	7/10/03	6/24/05, 70 FR 36511.	
2105.76	Wood Furniture Manufacturing Operations.	7/10/03	6/24/05, 70 FR 36511.	
Subpart 9—Transportation Related Sources				
2105.90	Gasoline Volatility	5/15/98 9/1/99	4/17/01, 66 FR 19724	(c)(151).
Part F—Air Pollution Episodes				
2106.01	Air Pollution Episode System	10/20/95	11/14/02, 67 FR 68935	(c)(192).
2106.02	Air Pollution Source Curtailment Plans.	10/20/95	11/14/02, 67 FR 68935	(c)(192).
2106.03	Episode Criteria	10/20/95	11/14/02, 67 FR 68935	(c)(192).
2106.04	Episode Actions	10/20/95	11/14/02, 67 FR 68935	(c)(192).
2106.05	USX-Clairton Works PM–10 Self Audit Emergency Action Plan.	8/15/97	6/12/98, 63 FR 32126	(c)(133)(i)(B)(*3*).
Part G—Methods				
2107.01	General	10/20/95	1/14/02, 67 FR 68935	(c)(192).
2107.02	Particulate Matter	10/20/95	11/14/02, 67 FR 68935	(c)(192).
2107.03	Sulfur Oxides	10/20/95	11/14/02, 67 FR 68935	(c)(192).
2107.04 (except paragraph .04.h).	Volatile Organic Compounds	10/20/95	11/14/02, 67 FR 68935	(c)(192).
2107.05	Nitrogen Oxides	10/20/95	11/14/02, 67 FR 68935	(c)(192).
2107.06	Incinerator Temperatures	10/20/95	11/14/02, 67 FR 68935	(c)(192).
2107.07	Coke Oven Emissions	10/20/95	11/14/02, 67 FR 68935	(c)(192).
2107.08	Coke Oven Gas	10/20/95	11/14/02, 67 FR 68935	(c)(192).
2107.10	Sulfur Content of Coke	10/20/95	11/14/02, 67 FR 68935	(c)(192).
2107.11	Visible Emissions	10/20/95	11/14/02, 67 FR 68935	(c)(192).
2107.15	Gasoline Volatility and RFG	5/15/98	4/17/01, 66 FR 19724	(c)(151).
2107.20.c, .g through .j, .m and .n.	Ambient Measurements	10/20/95	11/14/02, 67 FR 68935	(c)(192).

(2) EPA-APPROVED ALLEGHENY COUNTY HEALTH DEPARTMENT (ACHD) REGULATIONS—Continued

Article XX or XXI citation	Title/subject	State effective date	EPA approval date	Additional explanation/ § 52.2063 citation
Part H—Reporting, Testing & Monitoring				
2108.01	Reports Required	10/20/95	11/14/02, 67 FR 68935	(c)(192).
2108.01.a.	Termination of Operation	10/20/95	11/14/02, 67 FR 68935	(c)(192).
2108.01.b	Shutdown of Control Equipment	10/20/95	11/14/02, 67 FR 68935	(c)(192).
2108.01.c	Breakdowns	10/20/95	11/14/02, 67 FR 68935	(c)(192).
2108.01.d.	Cold Start	10/20/95	11/14/02, 67 FR 68935	(c)(192).
2108.01.e (Except paragraphs e.1.A &.B).	Emissions Inventory Statements	10/20/95	11/14/02, 67 FR 68935	(c)(192).
2108.01.f	Orders	10/20/95	11/14/02, 67 FR 68935	(c)(192).
2108.01.g	Violations	10/20/95	11/14/02, 67 FR 68935	(c)(192).
2108.02	Emissions Testing	10/20/95	11/14/02, 67 FR 68935	(c)(192).
2108.03	Continuous Emissions Monitoring	10/20/95	11/14/02, 67 FR 68935	(c)(192).
2108.04	Ambient Monitoring	10/20/95	11/14/02, 67 FR 68935	(c)(192).
Part I—Enforcement				
2109.01	Inspections	10/20/95	11/14/02, 67 FR 68935	(c)(192).
2109.02 (except paragraph.02.a.7).	Remedies	10/20/95	11/14/02, 67 FR 68935	(c)(192).
2109.03a. (introductory sentence), b. through f.	Enforcement Orders	10/20/95	11/14/02, 67 FR 68935	(c)(192).
2109.04	Orders Establishing an Additional or More Restrictive Standard.	10/20/95	11/14/02, 67 FR 68935	(c)(192).
2109.05	Emergency Orders	10/20/95	11/14/02, 67 FR 68935	(c)(192).
2109.06 (Except paragraphs .06.a.2, .a.3, and .a.4).	Civil Proceedings	10/20/95	11/14/02, 67 FR 68935	(c)(192).
2109.10	Appeals	10/20/95	11/14/02, 67 FR 68935	(c)(192).
2109.20	General Federal Conformity	10/20/95	11/14/02, 67 FR 68935	(c)(192).

(3) EPA-APPROVED PHILADELPHIA AMS REGULATIONS

Rule citation	Title/subject	State effective date	EPA approval date	Additional explanation/ § 52.2063 citation
Title 3—Air Management Code				
Chapter 3–100	General Provisions	10/20/69	5/31/72, 37 FR 10842	(c)(1).
Chapter 3–200 (Except § 3–207(4)).	Prohibited Conduct	10/4/76	6/4/79, 44 FR 31980	(c)(18).
Chapter 3–300	Administrative Provisions	9/21/72	3/12/79, 44 FR 13480	(c)(15).
Regulation I—General Provisions				
Section I	Definitions	4/29/70	5/31/72, 37 FR 10842	(c)(1).
Section II (Except portions of paragraph II.B).	Source Registration and Emission Reporting.	5/4/74	9/9/75, 40 FR 41787	(c)(12).
Section III	Testing and Test Methods	4/29/70	5/31/72, 37 FR 10842	(c)(1).
Section IV	Availability of Technology	4/29/70	5/31/72, 37 FR 10842	(c)(1).
Section V	Improvement and Plan	4/29/70	5/31/72, 37 FR 10842	(c)(1).
Section VI	Pre-existing Regulations	4/29/70	5/31/72, 37 FR 10842	(c)(1).
Section VII	Circumvention	4/29/70	5/31/72, 37 FR 10842	(c)(1).
Section VIII	Severability	4/29/70	5/31/72, 37 FR 10842	(c)(1).
Section IX	Effective Date	4/29/70	5/31/72, 37 FR 10842	(c)(1).
Section XI.D	Compliance with Federal Regulations—Stack Height Regulations.	3/27/86	1/23/89, 54 FR 3029	(c)(70).
Regulation II—Air Contaminant and Particulate Matter Emissions				
Section I	No Title [General Provisions]	4/29/70	5/31/72, 37 FR 10842	(c)(1).
Section II	Open Fires	4/29/70	5/31/72, 37 FR 10842	(c)(1).
Section IV	Visible Emissions	5/4/74	9/9/75, 40 FR 41787	(c)(12).
Section V	Particulate Matter Emissions from the Burning of Fuels.	8/27/81	4/16/82, 47 FR 16325	(c)(43).
Section VI	Selection of Fuel for Particulate Matter Emission Control.	4/29/70	5/31/72, 37 FR 10842	(c)(1).
Section VII	Particulate Matter Emissions from Chemical, Metallurgical, Mechanical and Other Processes.	4/29/70	5/31/72, 37 FR 10842	(c)(1).

(3) EPA-APPROVED PHILADELPHIA AMS REGULATIONS—Continued

Rule citation	Title/subject	State effective date	EPA approval date	Additional explanation/ § 52.2063 citation
Section VIII	Fugitive Dust	4/29/70	5/31/72, 37 FR 10842	(c)(1).
Table 1	No Title [Allowable Process Weight Emissions].	4/29/70	5/31/72, 37 FR 10842	(c)(1).
Regulation III—The Control of Emissions of Oxides and Sulfur Compounds				
Section I	No Title [General Provisions]	4/29/70	5/31/72, 37 FR 10842	(c)(1).
Section II	Control of Emission of Sulfur Compounds.	5/10/80	9/17/81, 46 FR 46133	(c)(37).
Section III	Control of Sulfur in Fuels	8/27/81	4/16/82, 47 FR 16325	(c)(43).
Regulation IV—Governing Air Pollution Control Measures During High Air Pollution Episodes				
Section I	Definitions	2/5/71	5/31/72, 37 FR 10842	(c)(1).
Section II	Declaration of Conditions	2/5/71	5/31/72, 37 FR 10842	(c)(1).
Section III	Termination of Conditions	2/5/71	5/31/72, 37 FR 10842	(c)(1).
Section IV	Alert and Notification System by the Health Commissioner and the Emergency Coordinator.	2/5/71	5/31/72, 37 FR 10842	(c)(1).
Section V	Advance Preparation for High Air Pollution Episodes.	2/5/71	5/31/72, 37 FR 10842	(c)(1)
Section VI	Actions and Restrictions	2/5/71	5/31/72, 37 FR 10842	(c)(1).
Section VII	Severability	2/5/71	5/31/72, 37 FR 10842	(c)(1).
Section VIII	Effective Date	2/5/71	5/31/72, 37 FR 10842	(c)(1).
Table I	Minimum Abatement Strategies for Emission Reduction Plans—Stage I Condition.	2/5/71	5/31/72, 37 FR 10842	(c)(1).
Table II	Minimum Abatement Strategies for Emission Reduction Plans—Stage II Condition.	2/5/71	5/31/72, 37 FR 10842	(c)(1).
Table III	Minimum Abatement Strategies for Emission Reduction Plans—Emergency Condition.	2/5/71	5/31/72, 37 FR 10842	(c)(1).
Table IV	Emergency Business and Establishment List.	2/5/71	5/31/72, 37 FR 10842	(c)(1).
Regulation V—Control of Emissions of Organic Substances From Stationary Sources				
Section I (Except for definitions related to paragraphs V.C.& V.D.).	Definitions	11/28/86	6/16/93, 58 FR 33200	(c)(83).
Section I	Definitions	5/23/88	4/6/93, 48 FR 17778	(c)(78).
Section II	Storage Tanks	7/10/71	5/31/72, 37 FR 10842	(c)(1).
Section III	Oil-Effluent Water Separator	7/10/71	5/31/72, 37 FR 10842	(c)(1).
Section IV	Pumps and Compressors	7/10/71	5/31/72, 37 FR 10842	(c)(1).
Section V (Except paragraphs V.C and V.D).	Organic Material Loading	7/10/71	5/31/72, 37 FR 10842	(c)(1).
Section VI	Solvents	7/10/71	5/31/72, 37 FR 10842	(c)(1).
Section VII	Processing of Photochemically Reactive Materials.	7/10/71	5/31/72, 37 FR 10842	(c)(1).
Section VIII	Architectural Coatings	7/10/71	5/31/72, 37 FR 10842	(c)(1).
Section IX	Disposal of Solvents	7/10/71	5/31/72, 37 FR 10842	(c)(1).
Section X	Compliance with Pennsylvania Standards for Volatile Organic Compounds (VOC).	11/28/86	6/16/93, 58 FR 33192	(c)(82).
Section XI	Petroleum Solvent Dry Cleaning	11/28/86	4/12/93, 58 FR 19066	(c)(77).
Section XII	Pharmaceutical Tablet Coating	11/28/86	6/16/93, 58 FR 33200	(c)(83).
Section XIII	Process Equipment Leaks	5/23/98	4/6/93, 58 FR 17778	(c)(78).
Section XXII	Circumvention	7/10/71 recodified 5/23/88	5/31/72, 37 FR 10842	(c)(1).
Section XXIII	Severability	7/10/71 recodified 5/23/88	5/31/72, 37 FR 10842	(c)(1).
Section XXIV	Effective Date	7/10/71 recodified 5/23/88	5/31/72, 37 FR 10842	(c)(1).

(3) EPA-APPROVED PHILADELPHIA AMS REGULATIONS—Continued

Rule citation	Title/subject	State effective date	EPA approval date	Additional explanation/ § 52.2063 citation
Regulation VII—Control of Emissions of Nitrogen Oxides From Stationary Sources				
Section I	Definitions	7/1/72	5/14/73, 38 FR 12696	(c)(7).
Section II	Fuel Burning Equipment	11/20/85	1/14/87, 52 FR 1456	(c)(65).
Section III	Nitric Acid Plants	7/1/72	5/14/73, 38 FR 12696	(c)(7).
Section IV	Emissions Monitoring	7/1/72	5/14/73, 38 FR 12696	(c)(7).
Section V	Circumvention	7/1/72	5/14/73, 38 FR 12696	(c)(7).
Section VI	Severability	7/1/72	5/14/73, 38 FR 12696	(c)(7).
Section VII	Effective Date	7/1/72	5/14/73, 38 FR 12696	(c)(7).
Regulation VIII—Control of Emissions of Carbon Monoxide From Stationary Sources				
Section I	Definitions	8/20/72	5/14/73, 38 FR 12696	(c)(7).
Section II	General	8/20/72	5/14/73, 38 FR 12696	(c)(7).
Section III	Emissions Monitoring	8/20/72	5/14/73, 38 FR 12696	(c)(7).
Section IV	Circumvention	8/20/72	5/14/73, 38 FR 12696	(c)(7).
Section V	Severability	8/20/72	5/14/73, 38 FR 12696	(c)(7).
Section VI	Effective Date	8/20/72	5/14/73, 38 FR 12696	(c)(7).
Regulation XI—Control of Emissions From Incinerators				
Section I	Definitions	5/4/74	9/9/75, 40 FR 41787	(c)(12).
Section II	General Provisions	5/4/74	9/9/75, 40 FR 41787	(c)(12).
Section III (Except paragraph III.E. (odors)).	Emissions Limitations	5/4/74	9/9/75, 40 FR 41787	(c)(12).
Section IV	Design	5/4/74	9/9/75, 40 FR 41787	(c)(12).
Section V	Operation	5/4/74	9/9/75, 40 FR 41787	(c)(12).
Section VI	Permits and Licenses	5/4/74	9/9/75, 40 FR 41787	(c)(12).
Section VII	Circumvention	5/4/74	9/9/75, 40 FR 41787	(c)(12).
Section VIII	Severability	5/4/74	9/9/75, 40 FR 41787	(c)(12).
Section IX	Effective Date	5/4/74	9/9/75, 40 FR 41787	(c)(12).
Regulation XIII—Construction, Modification, Reactivation and Operation of Sources				
Section I	Introduction	10/30/95	3/28/03, 68 FR 15059	(c)(203).
Section II	Program Adoption	10/30/95	3/28/03, 68 FR 15059	(c)(203).

(d) *EPA-approved source-specific requirements*

(1) EPA-APPROVED SOURCE-SPECIFIC REASONABLY AVAILABLE CONTROL TECHNOLOGY (RACT) REQUIREMENTS FOR VOLATILE ORGANIC COMPOUNDS (VOC) AND OXIDES OF NITROGEN (NO_X)

Name of source	Permit No.	County	State effective date	EPA approval date	Additional explanation/ § 52.2063 citation
For exceptions, *see* the applicable paragraphs in 40 CFR § 52.2063(c)					
ARCO Chemical Company	04–313–052	Beaver	12/9/86	5/16/90, 55 FR 20267	(c)(71).
IMC Chemical Group	39–313–014	Lehigh	12/10/86	5/16/90, 55 FR 20267	(c)(72).
Aristech Chemical Corp	86–I–0024–P	Allegheny	8/28/86 3/3/87	6/16/93, 58 FR 33197	(c)(80).
The Knoll Group	46–326–001A	Montgomery	3/24/93	10/19/93, 58 FR 53885	(c)(87).
ESSROC Materials	PA–48–0004A	Northampton	12/20/94	08/08/95, 60 FR 40292	(c)(98)(i)(B)(*1*).
Pennsylvania Power and Light Co. (PP&L)—Brunner Island.	PA–67–2005	York	12/22/94	08/08/95, 60 FR 40292	(c)(98)(i)(B)(*2*).
PPG Industries, Inc.—South Middleton.	OP–21–2002	Cumberland	12/22/94	08/08/95, 60 FR 40292	(c)(98)(i)(B)(*3*).
Stroehmann Bakeries—Dauphin County.	PA–22–2003	Dauphin	12/22/94	08/08/95, 60 FR 40292	(c)(98)(i)(B)(*4*).
General Electric Transportation Systems—Erie.	OP–25–025	Erie	12/21/94	08/08/95, 60 FR 40292	(c)(98)(i)(B)(*5*).
J. E. Baker Co. (Refractories)—York.	OP–67–2001	York	12/22/94	08/08/95, 60 FR 40292	(c)(98)(i)(B)(*6*).
Lafarge Corp	OP–39–0011	Lehigh	12/23/94	08/08/95, 60 FR 40292	(c)(98)(i)(B)(*7*).
Lafarge Corp	PA–39–0011A	Lehigh	12/23/94	08/08/95, 60 FR 40292	(c)(98)(i)(B)(*7*).
West Penn Power—Armstrong	PA–03–000–023	Armstrong	12/29/94	08/08/95, 60 FR 40292	(c)(98)(i)(B)(*8*).
West Penn Power—Armstrong	PA–03–306–004	Armstrong	3/28/94	08/08/95, 60 FR 40292	(c)(98)(i)(B)(*8*).

(1) EPA-APPROVED SOURCE-SPECIFIC REASONABLY AVAILABLE CONTROL TECHNOLOGY (RACT) REQUIREMENTS FOR VOLATILE ORGANIC COMPOUNDS (VOC) AND OXIDES OF NITROGEN (NO_X)—Continued

Name of source	Permit No.	County	State effective date	EPA approval date	Additional explanation/ § 52.2063 citation
West Penn Power—Armstrong	PA–03–306–006	Armstrong	11/22/94	08/08/95, 60 FR 40292	(c)(98)(i)(B)(*8*).
Plain and Fancy Kitchens, Inc	PA–38–318–019C	Lebanon	12/23/94	08/08/95, 60 FR 40292	(c)(98)(i)(B)(*9*).
Stroehmann Bakeries—Bradford County.	PA–08–0001	Bradford	2/9/95	08/10/95, 60 FR 40758	(c)(101)(i)(B).
Stroehmann Bakeries—Bradford County.	OP–08–0001A	Bradford	2/9/95	08/10/95, 60 FR 40758	(c)(101)(i)(B).
Stroehmann Bakeries—Lycoming County.	PA–41–0001	Lycoming	2/9/95	08/10/95, 60 FR 40758	(c)(101)(i)(B).
Stroehmann Bakeries—Lycoming County.	OP–41–0001A	Lycoming	2/9/95	08/10/95, 60 FR 40758	(c)(101)(i)(B).
Philadelphia Electric Co. (PECO)—Eddystone.	OP–23–0017	Delaware	12/28/94	09/08/95, 60 FR 46768	(c)(102)(i)(B)(*1*).
Philadelphia Electric Co. (PECO)—Eddystone.	PA–23–0017	Delaware	12/28/94	09/08/95, 60 FR 46768	(c)(102)(i)(B)(*1*).
Gilberton Power Co.—John Rich Memorial.	OP–54–0004	Schuylkill	12/20/94	09/08/95, 60 FR 46768	(c)(102)(i)(B)(*2*).
Bethlehem Steel—Coke and Chemical Production.	OP–48–0013	Northampton	12/20/94	09/08/95, 60 FR 46768	(c)(102)(i)(B)(*3*).
Bethlehem Steel—Foundry	OP–48–0014	Northampton	12/20/94	09/08/95, 60 FR 46768	(c)(102)(i)(B)(*3*).
Bethlehem Steel—Structural Products.	OP–48–0010	Northampton	12/20/94	09/08/95, 60 FR 46768	(c)(102)(i)(B)(*3*).
Bethlehem Steel—Forging	OP–48–0015	Northampton	12/20/94	09/08/95, 60 FR 46768	(c)(102)(i)(B)(*3*).
Westwood Energy Properties, Inc. (CRS Sirrine, Inc.).	OP–54–000–6	Schuylkill	12/27/94	09/08/95, 60 FR 46768	(c)(102)(i)(B)(*4*).
PECO Energy Co.—Front Street	OP–46–0045	Montgomery	3/31/95	09/08/95, 60 FR 46768	(c)(102)(i)(B)(*5*).
Crawford Furniture Manufacturing Corp.—Clarion County.	OP–16–021	Clarion	3/27/95	09/08/95, 60 FR 46768	(c)(102)(i)(B)(*6*).
Schuylkill Energy Resources	OP–54–0003	Schuylkill	5/19/95	09/08/95, 60 FR 46768	(c)(102)(i)(B)(*7*).
Columbia Gas Transmission Corp.—Milford Compressor Station.	OP–52–0001	Pike	4/21/95	09/08/95, 60 FR 46768	(c)(102)(i)(B)(*9*).
Texas Eastern Transmission Corp.—Entriken Compressor Station.	OP–31–2003	Huntingdon	5/16/95	09/08/95, 60 FR 46768	(c)(102)(i)(B)(*10*).
Columbia Gas Transmission Corp.—Greencastle Compressor Station.	OP–28–2003	Franklin	4/21/95	09/08/95, 60 FR 46768	(c)(102)(i)(B)(*11*).
Lord Corporation—Aerospace Div	OP–25–095	Erie	3/30/95	09/08/95, 60 FR 46768	(c)(102)(i)(B)(*12*).
Tennessee Gas Pipeline Co. (TENNECO)—Station 313.	PA–53–0001 OP–53–0001 CP–53–0001	Potter	11/27/95	04/09/96, 61 FR 15709	(c)(103)(i)(B)(*1*).
Corning Asahi Video Products—State College.	OP–14–0003	Centre	12/27/94	04/09/96, 61 FR 15709	(c)(103)(i)(B)(*2*).
Corning Asahi Video Products—State College.	OP–14–309–009C	Centre	5/5/94	04/09/96, 61 FR 15709	(c)(103)(i)(B)(*2*).
Corning Asahi Video Products—State College.	OP–14–309–010A	Centre	8/18/94	04/09/96, 61 FR 15709	(c)(103)(i)(B)(*2*).
Corning Asahi Video Products—State College.	OP–14–309–037A	Centre	5/5/94	04/09/96, 61 FR 15709	(c)(103)(i)(B)(*2*).
Columbia Gas Transmission Corp.—Easton Compressor Station.	OP–48–0001 PA–48–0001A	Northampton	5/19/95	04/09/96, 61 FR 15709	(c)(103)(i)(B)(*3*).
Texas Eastern Transmission Corp.—Bedford Compressor Station.	OP–05–2007	Bedford	5/16/95	04/09/96, 61 FR 15709	(c)(103)(i)(B)(*4*).
Texas Eastern Transmission Corp.—Marietta Compressor Station.	PA–36–2025	Lancaster	5/16/95	04/09/96, 61 FR 15709	(c)(103)(i)(B)(*5*).
Hercules Cement Co	OP–48–0005 PA–48–0005A	Northampton	12/23/94	04/09/96, 61 FR 15709	(c)(103)(i)(B)(*6*).
ESSROC (formerly Lone Star Industries, Inc.).	OP–48–0007	Northampton	12/29/94	04/09/96, 61 FR 15709	(c)(103)(i)(B)(*7*).
Pennsylvania Power and Light Co. (PP&L)—Montour.	OP–47–0001 PA–47–0001A	Montour	12/27/94	04/09/96, 61 FR 15709	(c)(103)(i)(B)(*8*).
Pennsylvania Electric Co. (PENELEC)—Shawville.	PA–17–0001	Clearfield	12/27/94	04/09/96, 61 FR 15709	(c)(103)(i)(B)(*9*).
Zinc Corp. of America—Potter Twp.	OP–04–000–044	Beaver	12/29/94	04/09/96, 61 FR 15709	(c)(103)(i)(B)(*10*).

(1) EPA-APPROVED SOURCE-SPECIFIC REASONABLY AVAILABLE CONTROL TECHNOLOGY (RACT) REQUIREMENTS FOR VOLATILE ORGANIC COMPOUNDS (VOC) AND OXIDES OF NITROGEN (NO_X)—Continued

Name of source	Permit No.	County	State effective date	EPA approval date	Additional explanation/ § 52.2063 citation
The Proctor and Gamble Paper Products Company Mehoopany.	OP–66–0001 PA–66–0001A	Wyoming	12/20/94	04/09/96, 61 FR 15709	(c)(103)(i)(B)(*11*).
Columbia Gas Transmission Corp.—Union City Compressor Station.	OP–25–892	Erie	4/11/95	04/09/96, 61 FR 15709	(c)(103)(i)(B)(*12*).
James River Corp.—Chambersburg.	OP–28–2006	Franklin	6/14/95	02/12/96, 61 FR 05303	(c)(104)(i)(C)(*1*).
Appleton Papers, Inc.—Harrisburg.	OP–21–2004	Cumberland	5/24/95	02/12/96, 61 FR 05303	(c)(104)(i)(C)(*2*).
Air Products and Chemicals, Inc.—Corporate R & D.	OP–39–0008	Lehigh	5/25/95	02/12/96, 61 FR 05303	(c)(104)(i)(C)(*3*).
Elf Atochem North America, Inc.—King of Prussia.	OP–46–0022	Montgomery	6/27/95	02/12/96, 61 FR 05303	(c)(104)(i)(C)(*4*).
York City Sewer Authority (Wastewater Treatment Plant).	OP–67–2013	York	3/1/95	02/12/96, 61 FR 05303	(c)(104)(i)(C)(*5*).
Glasgow, Inc.—Ivy Rock	OP–46–0043	Montgomery	6/7/95	02/12/96, 61 FR 05303	(c)(104)(i)(C)(*6*).
Glasgow, Inc.—Spring House	OP–46–0029	Montgomery	6/7/95	02/12/96, 61 FR 05303	(c)(104)(i)(C)(*7*).
Glasgow, Inc.—Catanach	OP–15–0021	Chester	6/7/95	02/12/96, 61 FR 05303	(c)(104)(i)(C)(*8*).
Glasgow, Inc.—Freeborn	OP–23–0026	Delaware	6/7/95	02/12/96, 61 FR 05303	(c)(104)(i)(C)(*9*).
UGI Utilities—Hunlock Creek	OP–40–0005 PA–40–0005A	Luzerne	12/20/94	05/16/96, 61 FR 24706	(c)(108)(i)(B)(*1*).
Solar Turbines, Inc. (York Cogeneration Facility).	PA–67–2009	York	8/17/95	05/16/96, 61 FR 24706	(c)(108)(i)(B)(*2*).
Solar Turbines, Inc. (York Cogeneration Facility).	CP–67–2009	York	8/17/95	05/16/96, 61 FR 24706	(c)(108)(i)(B)(*2*).
Columbia Gas Transmission Corp.—Renovo Compressor Station.	OP–18–0001 PA–18–0001	Clinton	7/18/95	05/16/96, 61 FR 24706	(c)(108)(i)(B)(*3*).
National Fuel Gas Supply Corp.—East Fork Compressor Station.	OP–53–0007 PA–53–0007A	Potter	7/17/95	05/16/96, 61 FR 24706	(c)(108)(i)(B)(*4*).
York County Solid Waste & Refuse Authority (Y.C.R.R.C.).	PA–67–2006	York	8/25/95	05/16/96, 61 FR 24706	(c)(108)(i)(B)(*5*).
W. R. Grace and Co.—FORMPAC Div.	PA–06–1036	Berks	5/12/95	05/16/96, 61 FR 24706	(c)(108)(i)(B)(*6*).
W. R. Grace and Co.—Reading Plant.	PA–06–315–001	Berks	6/4/92	05/16/96, 61 FR 24706	(c)(108)(i)(B)(*6*).
CNG Transmission Corp.—Cherry Tree Sta.	PA–32–000–303	Indiana	7/5/95	05/16/96, 61 FR 24706	(c)(108)(i)(B)(*7*).
EPC Power Corp. of Bethlehem (Crozer Chester CoGen).	OP–23–0007	Delaware	6/8/95	05/16/96, 61 FR 24706	(c)(108)(i)(B)(*8*).
C–P Converters, Inc.—York	OP–67–2030	York	8/30/95	05/16/96, 61 FR 24706	(c)(108)(i)(B)(*9*).
Fisher Scientific Co. International—Indiana.	OP–32–000–100	Indiana	7/18/95	05/16/96, 61 FR 24706	(c)(108)(i)(B)(*10*).
Adelphi Kitchens, Inc.—Robesonia Factory.	OP–06–1001	Berks	4/4/95	05/16/96, 61 FR 24706	(c)(108)(i)(B)(*11*).
Birchcraft Kitchens, Inc.—Reading Factory.	OP–06–1005	Berks	4/4/95	05/16/96, 61 FR 24706	(c)(108)(i)(B)(*12*).
Glasgow, Inc.—Bridgeport Asphalt Plant.	OP–46–0044	Montgomery	6/7/95	05/16/96, 61 FR 24706	(c)(108)(i)(B)(*13*).
Caparo Steel Co.—Farrell	OP–43–285	Mercer	11/3/95	12/20/96, 61 FR 67229	(c)(113)(i)(B)(*1*); 52.2037(g).
Sharon Steel Corp.—Farrell	OP–43–017	Mercer	11/3/95	12/20/96, 61 FR 67229	(c)(113)(i)(B)(*2*); 52.2036(f); 52.2037(e).
DMi Furniture, Inc.—Timely Plant #7 (Gettysburg).	OP–01–2001	Adams	6/13/95	03/12/97, 62 FR 11079	(c)(114)(i)(B)(*1*).
R. R. Donnelley and Sons Co.—Lancaster West Plant.	OP–36–2026	Lancaster	7/14/95	03/12/97, 62 FR 11079	(c)(114)(i)(B)(*2*).
International Paper Company—Hammermill Papers Division.	OP–18–0005	Clinton	12/27/94	01/29/97, 62 FR 04167	(c)(115)(i)(B).
Lucent Technology (formerly AT&T Corp.)—Reading.	PA–06–1003	Berks	6/26/95	04/18/97, 62 FR 19051	(c)(117)(i)(B)(*1*).
Garden State Tanning, Inc.—Fleetwood Plant.	PA–06–1014	Berks	6/21/95	04/18/97, 62 FR 19051	(c)(117)(i)(B)(*2*).
Glidden Co., The—Reading	OP–06–1035	Berks	2/15/96	04/18/97, 62 FR 19051	(c)(117)(i)(B)(*3*).
Maier's Bakery—Reading Plant	PA–06–1023	Berks	9/20/95	04/18/97, 62 FR 19047	(c)(118)(i)(B)(*1*).
Morgan Corp.—Morgantown Plant	OP–06–1025	Berks	8/31/95	04/18/97, 62 FR 19047	(c)(118)(i)(B)(*2*).
Allentown Cement Co., Inc.—Evansville Plant.	PA–06–1002	Berks	10/11/95	04/18/97, 62 FR 19047	(c)(118)(i)(B)(*3*).

(1) EPA-APPROVED SOURCE-SPECIFIC REASONABLY AVAILABLE CONTROL TECHNOLOGY (RACT) REQUIREMENTS FOR VOLATILE ORGANIC COMPOUNDS (VOC) AND OXIDES OF NITROGEN (NO_X)—Continued

Name of source	Permit No.	County	State effective date	EPA approval date	Additional explanation/ § 52.2063 citation
Quaker Maid (Schrock Cabinet Group)—Leesport.	OP–06–1028	Berks	10/27/95	04/18/97, 62 FR 19047	(c)(118)(i)(B)(*4*).
Brentwood Industries, Inc.—Reading Plant.	PA–06–1006	Berks	2/12/96	04/18/97, 62 FR 19047	(c)(118)(i)(B)(*5*).
Metropolitan Edison Co. (MetEd)—Titus Station.	PA–06–1024	Berks	3/9/95	04/18/97, 62 FR 19047	(c)(118)(i)(B)(*6*).
ICI Fluoropolymers—Downingtown.	PA–15–0009 CP–15–0009	Chester	10/3/95	04/18/97, 62 FR 19047	(c)(118)(i)(B)(*7*).
Synthetic Thread Co., Inc.—Bethlehem.	PA–39–0007A	Lehigh	8/10/95	04/18/97, 62 FR 19047	(c)(118)(i)(B)(*8*).
Bird-in-Hand Woodwork, Inc. (Childcraft Education Corp.).	OP–36–2022	Lancaster	9/27/95	04/18/97, 62 FR 19047	(c)(118)(i)(B)(*9*).
Heinz Pet Products—Bloomsburg	OP–19–0003	Columbia	11/27/95	08/21/97, 62 FR 44413	(c)(119)(i)(B)(*1*).
Graco Children's Products, Inc.—Elverson.	OP–15–0006	Chester	11/30/95	08/21/97, 62 FR 44413	(c)(119)(i)(B)(*2*).
Texas Eastern Transmission Corp.—Bernville.	OP–06–1033	Berks	1/31/97	04/18/97, 62 FR 19049	(c)(120)(i)(B)(*1*).
Texas Eastern Transmission Corp.—Bechtelsville.	OP–06–1034	Berks	1/31/97	04/18/97, 62 FR 19049	(c)(120)(i)(B)(*2*).
Carpenter Technology Corp.—Reading Plant.	OP–06–1007	Berks	9/27/96	04/18/97, 62 FR 19049	(c)(120)(i)(B)(*3*), (ii)(B).
North American Fluoropolymers Co. (NAFCO).	06–1026, CP–06–1026	Berks	4/19/95 6/1/95	04/18/97, 62 FR 19049	(c)(120)(i)(B)(*4*), (ii)(B).
CNG Transmission Corp.—Ellisburg Compressor Station.	PA–53–0004A	Potter	2/29/96	06/11/97, 62 FR 31732	(c)(121)(i)(B)(*1*).
CNG Transmission Corp.—Ellisburg Compressor Station.	OP–53–0004	Potter	2/29/96	06/11/97, 62 FR 31732	(c)(121)(i)(B)(*1*).
CNG Transmission Corp.—Ellisburg Compressor Station.	CP–53–0004A	Potter	2/29/96	06/11/97, 62 FR 31732	(c)(121)(i)(B)(*1*).
CNG Transmission Corp.—Greenlick Compressor Station.	PA–53–0003A	Potter	12/18/95	06/11/97, 62 FR 31732	(c)(121)(i)(B)(*2*).
CNG Transmission Corp.—Greenlick Station.	CP–53–0003A	Potter	12/18/95	06/11/97, 62 FR 31732	(c)(121)(i)(B)(*2*).
CNG Transmission Corp.—Greenlick Compressor Station.	OP–53–0003	Potter	2/18/95	06/11/97, 62 FR 31732	(c)(121)(i)(B)(*2*).
CNG Transmission Corp.—Crayne Station.	30–000–089	Greene	2/22/95	06/11/97, 62 FR 31732	(c)(121)(i)(B)(*3*).
CNG Transmission Corp.—State Line Station.	OP–53–0008	Potter	1/10/96	06/11/97, 62 FR 31732	(c)(121)(i)(B)(*4*).
CNG Transmission Corp.—Big Run Station.	PA–33–147	Jefferson	6/27/95	06/11/97, 62 FR 31732	(c)(121)(i)(B)(*5*).
Medusa Cement Company	OP–37–013	Lawrence	7/27/95	06/03/97, 62 FR 30250	(c)(122)(i)(B)(*1*).
Keystone Cement Co	OP–48–0003	Northampton	5/25/95	06/03/97, 62 FR 30250	(c)(122)(i)(B)(*2*).
Lehigh Portland Cement Company.	OP–67–2024	York	5/26/95	06/03/97, 62 FR 30250	(c)(122)(i)(B)(*3*).
Mercer Lime and Stone Company	OP–10–023	Butler	5/31/95	06/03/97, 62 FR 30250	(c)(122)(i)(B)(*4*).
Con-Lime, Inc	OP–14–0001	Centre	6/30/95	06/03/97, 62 FR 30250	(c)(122)(i)(B)(*5*).
Pennzoil Products Co.—Rouseville.	PA–61–016	Venango	9/8/95	06/11/97, 62 FR 31738	(c)(124)(i)(B).
R. R. Donnelley & Sons Co.—Lancaster East Plant.	OP–36–2027	Lancaster	7/14/95	07/21/97, 62 FR 33891	(c)(125)(i)(B); 52.2036j.
Panther Creek Partners	OP–13–0003	Carbon	12/2/96	09/29/97, 62 FR 50871	(c)(128)(i)(B).
Allegro Microsystems, W.G., Inc.—Willow Grove.	OP–46–0006	Montgomery	12/19/97	03/09/98, 63 FR 11370	(c)(130)(i)(B)(*1*).
Hale Products, Inc.—Conshohocken.	OP–46–0057	Montgomery	11/21/97	03/09/98, 63 FR 11370	(c)(130)(i)(B)(*2*).
Con-Lime, Inc.—Bellefonte	OP–14–0001	Centre	1/7/98	03/09/98, 63 FR 11370	(c)(130)(i)(B)(*3*).
Coastal Aluminum Rolling Mills, Inc.—Williamsport.	OP–41–0007	Lycoming	11/21/97	03/09/98, 63 FR 11370	(c)(130)(i)(B)(*4*).
ABP/International Envelope Co	OP–15–0023	Chester	11/2/95	03/09/98, 63 FR 11370	(c)(130)(i)(B)(*5*).
Brown Printing Company	CP–46–0018	Montgomery	9/26/96 10/27/97	03/09/98, 63 FR 11370	(c)(130)(i)(B)(*6*).
Fibre-Metal Products Company	OP–23–0025	Delaware	2/20/98	06/29/98, 63 FR 35145	(c)(132)(i)(B)(*1*).
Finnaren & Haley, Inc	OP–46–0070	Montgomery	3/5/98	06/29/98, 63 FR 35145	(c)(132)(i)(B)(*2*).
Fres-co System USA, Inc	OP–09–0027	Bucks	3/5/98	06/29/98, 63 FR 35145	(c)(132)(i)(B)(*3*).
Graphic Packaging Corporation	OP–15–0013	Chester	2/28/98	06/29/98, 63 FR 35145	(c)(132)(i)(B)(*4*).
Montour Oil Service Company, a division of Sun Company, Inc.	OP–41–0013	Lycoming	3/19/98	06/29/98, 63 FR 35145	(c)(132)(i)(B)(*5*).

(1) EPA-APPROVED SOURCE-SPECIFIC REASONABLY AVAILABLE CONTROL TECHNOLOGY (RACT) REQUIREMENTS FOR VOLATILE ORGANIC COMPOUNDS (VOC) AND OXIDES OF NITROGEN (NO_X)—Continued

Name of source	Permit No.	County	State effective date	EPA approval date	Additional explanation/ § 52.2063 citation
Atlantic Refining and Marketing Corp. (Sun Co., Inc. (R&M)).	OP–49–0015	Northampton	3/19/98	06/29/98, 63 FR 35145	(c)(132)(i)(B)(*6*).
Transwall Corporation	OP–15–0025	Chester	3/10/98	06/29/98, 63 FR 35145	(c)(132)(i)(B)(*7*).
Tavo Packaging (formerly Mead Packaging Company).	OP–09–0008	Bucks	11/8/95	06/29/98, 63 FR 35145	(c)(132)(i)(B)(*8*).
CNG Transmission Corp.—Harrison Compressor Station.	PA–53–0005A	Potter	4/16/96	10/08/98, 63 FR 54050	(c)(134)(i)(B)(*1*).
CNG Transmission Corp.—Harrison Compressor Station.	OP–53–0005	Potter	4/16/96	10/08/98, 63 FR 54050	(c)(134)(i)(B)(*1*).
CNG Transmission Corp.—Harrison Station.	CP–53–0005A	Potter	4/16/96	10/08/98, 63 FR 54050	(c)(134)(i)(B)(*1*).
CNG Transmission Corp.—Leidy Station.	PA–18–0004A	Clinton	3/25/96	10/08/98, 63 FR 54050	(c)(134)(i)(B)(*2*).
CNG Transmission Corp.—Leidy Compressor Station.	OP–18–0004	Clinton	2/29/96	10/08/98, 63 FR 54050	(c)(134)(i)(B)(*2*).
CNG Transmission Corp.—Leidy Station.	CP–18–0004A	Clinton	3/25/96	10/08/98, 63 FR 54050	(c)(134)(i)(B)(*2*).
CNG Transmission Corp.—Sabinsville Compressor Station.	PA–59–0002A	Tioga	12/18/95	10/08/98, 63 FR 54050	(c)(134)(i)(B)(*3*).
CNG Transmission Corp.—Sabinsville Compressor Station.	OP–59–0002	Tioga	12/18/95	10/08/98, 63 FR 54050	(c)(134)(i)(B)(*3*).
CNG Transmission Corp.—Sabinsville Station.	CP–59–0002A	Tioga	12/18/95	10/08/98, 63 FR 54050	(c)(134)(i)(B)(*3*).
CNG Transmission Corp.—Tioga Station.	OP–59–0006	Tioga	1/16/96	10/08/98, 63 FR 54050	(c)(134)(i)(B)(*4*).
Eldorado Properties Corp.—Northumberland Terminal.	OP–49–0016	Northumberland	5/1/98	11/06/98, 63 FR 59884	(c)(136)(i)(B)(*1*).
Endura Products, Inc	OP–09–0028	Bucks	5/13/98	11/06/98, 63 FR 59884	(c)(136)(i)(B)(*2*).
Ford Electronics & Refrigeration Company.	OP–46–0036	Montgomery	4/30/98	11/06/98, 63 FR 59884	(c)(136)(i)(B)(*3*).
H & N Packaging, Inc. (formerly Paramount Packaging Corp.).	OP–09–0038	Bucks	6/8/98	11/06/98, 63 FR 59884	(c)(136)(i)(B)(*4*).
Lancaster County Solid Waste Management Authority.	36–02013	Lancaster	6/3/98	11/06/98, 63 FR 59884	(c)(136)(i)(B)(*5*).
Monsey Products Co.—Kimberton	OP–15–0031	Chester	6/4/98	11/06/98, 63 FR 59884	(c)(136)(i)(B)(*6*).
Ortho-McNeil Pharmaceutical—Spring House.	OP–46–0027	Montgomery	6/4/98	11/06/98, 63 FR 59884	(c)(136)(i)(B)(*7*).
Piccari Press, Inc	OP–09–0040	Bucks	4/29/98	11/06/98, 63 FR 59884	(c)(136)(i)(B)(*8*).
Pierce and Stevens Corp.—Kimberton.	OP–15–0011	Chester	3/27/98	11/06/98, 63 FR 59884	(c)(136)(i)(B)(*9*).
PQ Corporation—Chester	OP–23–0016	Delaware	6/16/98	11/06/98, 63 FR 59884	(c)(136)(i)(B)(*10*).
Reynolds Metals Company Downington.	OP–15–0004	Chester	5/8/98	11/06/98, 63 FR 59884	(c)(136)(i)(B)(*11*).
Rhone-Poulenc Rorer Pharmaceutical, Inc.	OP–46–0048B	Montgomery	4/2/98	11/06/98, 63 FR 59884	(c)(136)(i)(B)(*12*).
Superior Tube Company	OP–46–0020	Montgomery	4/17/98	11/06/98, 63 FR 59884	(c)(136)(i)(B)(*13*).
Uniform Tubes Inc	OP–46–0046A	Montgomery	3/26/98	11/06/98, 63 FR 59884	(c)(136)(i)(B)(*14*).
U.S. Air Force—Willow Grove Air Reserve Station.	OP–46–0072	Montgomery	5/1/98	11/06/98, 63 FR 59884	(c)(136)(i)(B)(*15*).
Naval Air Station, Joint Reserve Base—Willow Grove.	OP–46–0079	Montgomery	5/4/98	11/06/98, 63 FR 59884	(c)(136)(i)(B)(*16*).
Columbia Gas Transmission Corp.—Artemas Compressor Station.	05–2006	Bedford	4/19/95	12/03/98, 63 FR 66755	(c)(137)(i)B)(*1*).
Columbia Gas Transmission Corp.—Donegal Compressor Station.	63–000–631	Washington	7/10/95	12/03/98, 63 FR 66755	(c)(137)(i)B)(*2*).
Columbia Gas Transmission Corp.—Gettysburg Compressor Station.	01–2003	Adams	4/21/95	12/03/98, 63 FR 66755	(c)(137)(i)B)(*3*).
Columbia Gas Transmission Corp.—Eagle Compressor Station.	OP–15–0022	Chester	2/1/96	12/03/98, 63 FR 66755	(c)(137)(i)B)(*4*).
Columbia Gas Transmission Corp.—Downingtown.	CP–15–0020	Chester	9/15/95	12/03/98, 63 FR 66755	(c)(137)(i)B)(*5*).
GKN Sinter Metals, Inc	OP–12–0002	Cameron	10/30/98	04/16/99, 64 FR 18821	(c)(138)(i)(B)(*1*).
Cabinet Industries, Inc.—Water Street Plant.	OP–47–0005	Montour	9/21/98	04/16/99, 64 FR 18821	(c)(138)(i)(B)(*2*).

(1) EPA-APPROVED SOURCE-SPECIFIC REASONABLY AVAILABLE CONTROL TECHNOLOGY (RACT) REQUIREMENTS FOR VOLATILE ORGANIC COMPOUNDS (VOC) AND OXIDES OF NITROGEN (NO_X)—Continued

Name of source	Permit No.	County	State effective date	EPA approval date	Additional explanation/ § 52.2063 citation
Springs Window Fashions Division, Inc.	OP–41–0014	Lycoming	9/29/98	04/16/99, 64 FR 18821	(c)(138)(i)(B)(*3*).
Centennial Printing Corp	OP–46–0068	Montgomery	10/31/96 5/11/98	04/16/99, 64 FR 18821	(c)(138)(i)(B)(*4*).
Strick Corp.—Danville	OP–47–0002	Montour	8/28/96	04/16/99, 64 FR 18821	(c)(138)(i)(B)(*5*).
Handy and Harmon Tube Co.—Norristown.	OP–46–0016	Montgomery	9/25/95	04/16/99, 64 FR 18821	(c)(138)(i)(B)(*6*).
Boeing Defense & Space Group—Helicopters Div.	CP–23–0009	Delaware	9/3/97	12/15/00, 65 FR 78418	(c)(143)(i)(B)(*1*).
Delaware County Regional Authority's Western Regional Treatment Plant (DELCORA WRTP).	OP–23–0032	Delaware	3/12/97 5/16/97	12/15/00, 65 FR 78418	(c)(143)(i)(B)(*2*).
Delbar Products, Inc.—Perkasie	OP–09–0025	Bucks	2/1/96	12/15/00, 65 FR 78418	(c)(143)(i)(B)(*3*).
Department of Public Welfare (NSH)—Norristown.	OP–46–0060	Montgomery	1/21/98	12/15/00, 65 FR 78418	(c)(143)(i)(B)(*4*).
Dopaco, Inc.—Downingtown	CP–15–0029	Chester	3/6/96	12/15/00, 65 FR 78418	(c)(143)(i)(B)(*5*).
Garlock, Inc. (Plastomer Products).	PA–09–0035	Bucks	3/12/97	12/15/00, 65 FR 78418	(c)(143)(i)(B)(*6*).
Interstate Brands Corporation (formerly, Continental Baking Company).	PLID (51–) 5811	Philadelphia	4/10/95	12/15/00, 65 FR 78418	(c)(143)(i)(B)(*7*).
J. B. Slevin Company Inc.—Lansdowne.	OP–23–0013	Delaware	9/3/96	12/15/00, 65 FR 78418	(c)(143)(i)(B)(*8*).
Laclede Steel Co.—Fairless Hills	OP–09–0023	Bucks	7/17/95	12/15/00, 65 FR 78418	(c)(143)(i)(B)(*9*).
LNP Engineering Plastics, Inc.—Thorndale.	OP–15–0035	Chester	10/31/97	12/15/00, 65 FR 78418	(c)(143)(i)(B)(*10*).
Lukens Steel Co.—Coatesville	OP–15–0010	Chester	5/6/99	12/15/00, 65 FR 78418	(c)(143)(i)(B)(*11*).
Nabisco Biscuit Co	PLID (51–) 3201	Philadelphia	4/10/95	12/15/00, 65 FR 78418	(c)(143)(i)(B)(*12*).
PECO Energy Co.—Croydon Generating Station.	OP–09–0016A	Bucks	12/20/96	12/15/00, 65 FR 78418	(c)(143)(i)(B)(*13*).
PECO Energy Co.—Limerick Generating Station.	OP–46–0038	Montgomery	7/25/95	12/15/00, 65 FR 78418	(c)(143)(i)(B)(*14*).
PECO Energy Co.—USX Fairless Works Powerhouse.	OP–09–0066	Bucks	12/31/98 4/6/99	12/15/00, 65 FR 78418	(c)(143)(i)(B)(*15*).
PECO Energy Co.—West Conshohocken Plant.	OP–46–0045A	Montgomery	12/4/97	12/15/00, 65 FR 78418	(c)(143)(i)(B)(*16*).
Pennsylvania Electric Co.—Front Street Station.	25–0041	Erie	2/25/99	12/15/00, 65 FR 78418	(c)(143)(i)(B)(*17*).
American Inks and Coatings Corp.—Valley Forge.	OP–15–0026A	Chester	1/10/97	12/15/00, 65 FR 78418	(c)(143)(i)(B)(*18*).
Avery Dennison Co. (Fasson Roll Division)—Quakertown.	OP–09–0001A	Bucks	10/2/97	12/15/00, 65 FR 78418	(c)(143)(i)(B)(*19*).
Cabot Performance Materials—Boyertown.	OP–46–0037	Montgomery	4/13/99	12/15/00, 65 FR 78418	(c)(143)(i)(B)(*20*).
Cleveland Steel Container Corp.—Quakertown.	OP–09–0022	Bucks	9/30/96	12/15/00, 65 FR 78418	(c)(143)(i)(B)(*21*).
CMS Gilbreth Packaging Systems—Bristol.	OP–09–0036	Bucks	1/7/97	12/15/00, 65 FR 78418	(c)(143)(i)(B)(*22*).
CMS Gilbreth Packaging Systems—Bensalem.	OP–09–0037	Bucks	4/10/97	12/15/00, 65 FR 78418	(c)(143)(i)(B)(*23*).
Congoleum Corp.—Marcus Hook	OP–23–0021	Delaware	12/31/98	12/15/00, 65 FR 78418	(c)(143)(i)(B)(*24*).
Epsilon Products Co.—Marcus Hook.	OP–23–0012	Delaware	2/15/96	12/15/00, 65 FR 78418	(c)(143)(i)(B)(*25*).
Foamex International, Inc.—Eddystone.	OP–23–0006A	Delaware	3/30/99	12/15/00, 65 FR 78418	(c)(143)(i)(B)(*26*).
Forms, Inc., Spectra Graphics—Willow Grove.	OP–46–0023	Montgomery	11/9/95 3/25/98	12/15/00, 65 FR78418	(c)(143)(i)(B)(*27*).
Global Packaging, Inc. (formerly BG Packaging)—Oaks.	OP–46–0026	Montgomery	8/30/96 12/24/97	12/15/00, 65 FR78418	(c)(143)(i)(B)(*28*).
Jefferson Smurfit Corp. (Container Corp. of Amer.)—Oaks.	OP–46–0041	Montgomery	4/18/97	12/15/00, 65 FR78418	(c)(143)(i)(B)(*29*).
Jefferson Smurfit Corp. (Container Corp. of Amer.)—North Wales.	OP–46–0062	Montgomery	7/15/96	12/15/00, 65 FR 78418	(c)(143)(i)(B)(*30*).
Lonza, Inc.—Conshohocken	OP–46–0025	Montgomery	4/22/97 6/16/98	12/15/00, 65 FR 78418	(c)(143)(i)(B)(*31*).
Markel Corporation	OP–46–0081	Montgomery	4/9/99	12/15/00, 65 FR 78418	(c)(143)(i)(B)(*32*).

(1) EPA-APPROVED SOURCE-SPECIFIC REASONABLY AVAILABLE CONTROL TECHNOLOGY (RACT) REQUIREMENTS FOR VOLATILE ORGANIC COMPOUNDS (VOC) AND OXIDES OF NITROGEN (NO_X)—Continued

Name of source	Permit No.	County	State effective date	EPA approval date	Additional explanation/ § 52.2063 citation
McCorquodale Security Cards, Inc.—West Whiteland.	OP–15–0037	Chester	9/3/96	12/15/00, 65 FR 78418	(c)(143)(i)(B)(*33*).
Mike-Rich, Inc. (MRI)—Newtown	OP–09–0021	Bucks	12/20/96	12/15/00, 65 FR 78418	(c)(143)(i)(B)(*34*).
Minnesota Mining and Manufacturing (3M) Company—Bristol.	CP–09–0005	Bucks	8/8/96	12/15/00, 65 FR 78418	(c)(143)(i)(B)(*35*).
MM Biogas Power LLC (formerly O'Brien Environmental Energy, Inc.).	CP–46–0067	Montgomery	10/31/97	12/15/00, 65 FR 78418	(c)(143)(i)(B)(*36*).
Norwood Industries, Inc.—Frazer	OP–15–0014A	Chester	12/20/96 12/2/99	12/15/00, 65 FR 78418	(c)(143)(i)(B)(*37*).
NVF Company	OP–15–0030	Chester	4/13/99	12/15/00, 65 FR 78418	(c)(143)(i)(B)(*38*).
Occidental Chemical Corp. (Vinyls Div.)—Pottstown.	OP–46–0015	Montgomery	11/7/96	12/15/00, 65 FR 78418	(c)(143)(i)(B)(*39*).
Philadelphia Newspapers, Inc. (Schuylkill Printing Plant).	OP–46–0012	Montgomery	8/30/96 3/15/00	12/15/00, 65 FR 78418	(c)(143)(i)(B)(*40*).
The Proctor and Gamble Paper Products Co.	OP–66–0001	Wyoming	4/4/97	12/15/00, 65 FR 78418	(c)(143)(i)(B)(*41*).
Quebecor Printing Atglen, Inc.—Atglen.	OP–15–0002	Chester	12/10/96	12/15/00, 65 FR 78418	(c)(143)(i)(B)(*42*).
Sartomer Company, Inc	OP–15–0015	Chester	1/17/96 3/25/98	12/15/00, 65 FR 78418	(c)(143)(i)(B)(*43*).
Silberline Manufacturing Co	OP–54–0041	Schuylkill	4/19/99	12/15/00, 65 FR 78418	(c)(143)(i)(B)(*44*).
SmithKline Beecham Research Co. (formerly Sterling Winthrop, Inc.).	OP–46–0031	Montgomery	10/31/97 5/1/98	12/15/00, 65 FR 78418	(c)(143)(i)(B)(*45*).
Sullivan Graphics, Inc.—York	OP–67–2023	York	8/22/95	12/15/00, 65 FR 78418	(c)(143)(i)(B)(*46*).
Sun Company, Inc (R&M) (formerly Chevron USA)—Tinicum.	OP–23–0010	Delaware	10/31/96	12/15/00, 65 FR 78418	(c)(143)(i)(B)(*47*).
Sun Company, Inc (R&M) (formerly Chevron USA)—Darby.	OP–23–0011	Delaware	10/31/96	12/15/00, 65 FR 78418	(c)(143)(i)(B)(*48*).
Universal Packaging Corporation	OP–46–0156	Montgomery	4/8/99	12/15/00, 65 FR 78418	(c)(143)(i)(B)(*49*).
Zenith Products Corp.—Aston	OP–23–0008	Delaware	4/7/97	12/15/00, 65 FR 78418	(c)(143)(i)(B)(*50*).
Budd Company	PLID 51–1564	Philadelphia	12/28/95	12/15/00, 65 FR 78418	(c)(143)(i)(B)(*51*).
Bellevue Cogeneration Plant	PLID (51–) 6513	Philadelphia	4/10/95	12/15/00, 65 FR 78418	(c)(143)(i)(B)(*52*).
MSC Pre-Finish Metals, Inc.—Morrisville.	OP–09–0030	Bucks	11/7/96 3/31/98	12/15/00, 65 FR 78418	(c)(143)(i)(B)(*53*).
Temple University, Health Sciences Center.	PLID (51–) 8906	Philadelphia	5/27/95	12/15/00, 65 FR 78418	(c)(143)(i)(B)(*54*).
TRIGEN—Schuylkill Station	PLID (51–) 4942	Philadelphia	5/29/95	12/15/00, 65 FR 78418	(c)(143)(i)(B)(*55*).
TRIGEN—Edison Station	PLID (51–) 4902	Philadelphia	5/29/95	12/15/00, 65 FR 78418	(c)(143)(i)(B)(*56*).
Advanced Glassfiber Yarns LLC (formerly Owens Corning)—Huntingdon.	OP–31–02002	Huntingdon	4/13/99	08/06/01, 66 FR 40891	(c)(149)(i)(B)(*1*).
Armstrong World Industries, Inc.—Beech Creek.	OP–18–0002	Clinton	7/6/95	08/06/01, 66 FR 40891	(c)(149)(i)(B)(*2*).
Bemis Company, Film Division	OP–40–0007A	Luzerne	10/10/95	08/06/01, 66 FR 40891	(c)(149)(i)(B)(*3*).
Brentwood Industries, Inc	PA–06–1006A	Berks	6/3/99	08/06/01, 66 FR 40891	(c)(149)(i)(B)(*4*).
Certainteed Corp.—Mountaintop	OP–40–0010	Luzerne	5/31/96	08/06/01, 66 FR 40891	(c)(149)(i)(B)(*5*).
CNG Transmission Corp.—Ardell Station.	OP–24–120	Elk	9/30/95	08/06/01, 66 FR 40891	(c)(149)(i)(B)(*6*).
CNG Transmission Corp.—Finnefrock Station.	PA–18–0003A	Clinton	2/29/96	08/06/01, 66 FR 40891	(c)(149)(i)(B)(*7*).
Consol Pennsylvania Coal Company—Bailey Prep Plant.	OP–30–000–072	Greene	3/23/99	08/06/01, 66 FR 40891	(c)(149)(i)(B)(*8*).
Consolidated Rail Corp. (CONRAIL)—Hollidaysburg Car Shop.	OP–07–2002	Blair	8/29/95	08/06/01, 66 FR 40891	(c)(149)(i)(B)(*9*).
Consolidated Rail Corp. (CONRAIL)—Juniata.	OP–07–2003	Blair	8/29/95	08/06/01, 66 FR 40891	(c)(149)(i)(B)(*10*).
Containment Solutions, Inc. (formerly called Fluid Containment—Mt. Union).	OP–31–02005	Huntingdon	4/9/99	08/06/01, 66 FR 40891	(c)(149)(i)(B)(*11*).
Cooper Energy Systems, Grove City.	OP–43–003	Mercer	7/25/96	08/06/01, 66 FR 40891	(c)(149)(i)(B)(*12*).
Cyprus Cumberland Resources Corp.	OP–30–000–040	Greene	3/26/99	08/06/01, 66 FR 40891	(c)(149)(i)(B)(*13*).
Defense Distribution—Susquehanna.	OP–67–02041	York	2/1/00	08/06/01, 66 FR 40891	(c)(149)(i)(B)(*14*).
EMI Company	OP–25–070	Erie	10/24/96	08/06/01, 66 FR 40891	(c)(149)(i)(B)(*15*).
Empire Sanitary Landfill, Inc	OP–35–0009	Lackawanna	10/17/96	08/06/01, 66 FR 40891	(c)(149)(i)(B)(*16*).

(1) EPA-APPROVED SOURCE-SPECIFIC REASONABLY AVAILABLE CONTROL TECHNOLOGY (RACT) REQUIREMENTS FOR VOLATILE ORGANIC COMPOUNDS (VOC) AND OXIDES OF NITROGEN (NO_X)—Continued

Name of source	Permit No.	County	State effective date	EPA approval date	Additional explanation/ § 52.2063 citation
Equitrans, Inc.—Rogersville Station.	(OP)30–000–109	Greene	7/10/95	08/06/01, 66 FR 40891	(c)(149)(i)(B)(*17*).
Equitrans, Inc.—Pratt Station	(OP)30–000–110	Greene	7/10/95	08/06/01, 66 FR 40891	(c)(149)(i)(B)(*18*).
Erie Coke Corporation—Erie	OP–25–029	Erie	6/27/95	08/06/01, 66 FR 40891	(c)(149)(i)(B)(*19*).
Fleetwood Folding Trailers, Inc.—Somerset.	(OP)56–000–151	Somerset	2/28/96	08/06/01, 66 FR 40891	(c)(149)(i)(B)(*20*).
Gichner Systems Group, Inc	(OP)67–2033	York	8/5/97	08/06/01, 66 FR 40891	(c)(149)(i)(B)(*21*).
Offset Paperback Manufacturers, Inc.—Dallas.	(OP)40–0008	Luzerne	4/16/99	08/06/01, 66 FR 40891	(c)(149)(i)(B)(*22*).
Overhead Door Corporation—Mifflin County.	(OP)44–2011	Mifflin	6/4/97	08/06/01, 66 FR 40891	(c)(149)(i)(B)(*23*).
SANYO Audio Manufacturing (USA) Corp.	(OP)44–2003	Mifflin	6/30/95	08/06/01, 66 FR 40891	(c)(149)(i)(B)(*24*).
Stroehmann Bakeries OP—Luzerne County.	(OP)40–0014A	Luzerne	5/30/95	08/06/01, 66 FR 40891	(c)(149)(i)(B)(*25*).
Merck and Co., Inc.—West Point Facility.	OP–46–0005	Montgomery	1/13/97 6/23/00	04/18/01, 66 FR 19858	(c)(154)(i)(D).
Amerada Hess Corp	PA–PLID (51–) 5009	Philadelphia	5/29/95	10/31/01, 66 FR 54936	(c)(156)(i)(B)(*1*).
Amoco Oil Company	PA–PLID (51–) 5011	Philadelphia	5/29/95	10/31/01, 66 FR 54936	(c)(156)(i)(B)(*2*).
Cartex Corporation	OP–09–0076	Bucks	4/9/99	10/31/01, 66 FR 54936	(c)(156)(i)(B)(*3*).
Exxon Company, USA	PA–PLID (51–) 5008	Philadelphia	5/29/95	10/31/01, 66 FR 54936	(c)(156)(i)(B)(*4*).
GATX Terminals Corporation	PA–PLID (51–) 5003	Philadelphia	5/29/95	10/31/01, 66 FR 54936	(c)(156)(i)(B)(*5*).
Hatfield Quality Meats, Inc.—Hatfield.	OP–46–0013A	Montgomery	1/9/97 10/1/98	10/31/01, 66 FR 54936	(c)(156)(i)(B)(*6*).
J. L. Clark, Inc	OP–36–02009	Lancaster	4/16/99	10/31/01, 66 FR 54936	(c)(156)(i)(B)(*7*).
Johnson Matthey, Inc.—Wayne	OP–15–0027	Chester	8/3/98 4/15/99	10/31/01, 66 FR 54936	(c)(156)(i)(B)(*8*).
Kurz Hastings, Inc	PA–PLID (51–) 1585	Philadelphia	5/29/95	10/31/01, 66 FR 54936	(c)(156)(i)(B)(*9*).
Lawrence McFadden, Inc	PA–PLID (51–) 2074	Philadelphia	6/11/97	10/31/01, 66 FR 54936	(c)(156)(i)(B)(*10*).
Philadelphia Baking Company	PA–PLID (51–) 3048	Philadelphia	4/10/95	10/31/01, 66 FR 54936	(c)(156)(i)(B)(*11*).
Philadelphia Gas Works—Passyunk.	PA–PLID (51–) –4921	Philadelphia	5/29/95	10/31/01, 66 FR 54936	(c)(156)(i)(B)(*12*).
PPG Industries, Inc. (BASF)	OP–23–0005	Delaware	6/4/97	10/31/01, 66 FR 54936	(c)(156)(i)(B)(*13*).
SmithKline Beecham Pharmaceuticals.	OP–46–0035	Montgomery	3/27/97 10/20/98	10/31/01, 66 FR 54936	(c)(156)(i)(B)(*14*).
Teva Pharmaceuticals USA (formerly Lemmon company).	OP–09–0010	Bucks	4/9/99	10/31/01, 66 FR 54936	(c)(156)(i)(B)(*15*).
The Philadelphian Condominium Building.	PA–PLID (51–) 6512	Philadelphia	5/29/95	10/31/01, 66 FR 54936	(c)(156)(i)(B)(*16*).
Warner Company	OP–15–0001	Chester	7/17/95	10/31/01, 66 FR 54936	(c)(156)(i)(B)(*17*).
Webcraft Technologies, Inc	OP–09–0009	Bucks	4/18/96 10/15/98	10/31/01, 66 FR 54936	(c)(156)(i)(B)(*18*).
Latrobe Steel Company—Latrobe	OP–65–000–016	Westmoreland	12/22/95	10/16/01, 66 FR 52517	(c)(158)(i)(B).
Allegheny Ludlum Corporation—Brackenridge.	CO–260	Allegheny	12/19/96	10/18/01, 66 FR 52851	(c)(159)(i)(B).
Kosmos Cement Co.—Neville Island Facility.	EO–208	Allegheny	12/19/96	10/18/01, 66 FR 52857	(c)(160)(i)(B)(*1*).
Armstrong Cement and Supply Company—Cabot.	OP–10–028	Butler	3/31/99	10/18/01, 66 FR 52857	(c)(160)(i)(B)(*2*).
Duquesne Light Company—Cheswick Power Station.	CO–217	Allegheny	3/8/96	10/18/01, 66 FR 52867	(c)(161)(i)(B)(*1*).
Duquesne Light Company—Elrama Plant.	(PA)63–000–014	Washington	12/29/94	10/18/01, 66 FR 52867	(c)(161)(i)(B)(*2*).
Pennsylvania Electric Co. (PENELEC)—Keystone Generating Station.	(PA–)03–000–027	Armstrong	12/29/94	10/18/01, 66 FR 52867	(c)(161)(i)(B)(*3*).
IDL, Incorporated	CO–225	Allegheny	7/18/96	10/18/01, 66 FR 52862	(c)(162)(i)(B)(*1*).
Oakmont Pharmaceutical, Inc	CO–252	Allegheny	12/19/96	10/18/01, 66 FR 52862	(c)(162)(i)(B)(*2*).
U.S. Air, Inc	CO–255	Allegheny	1/14/97	10/18/01, 66 FR 52862	(c)(162)(i)(B)(*3*).
Lukens Steel Corporation—Houston Plant.	(OP)63–000–080	Washington	2/22/99	10/16/01, 66 FR 52522	(c)(163)(i)(B)(*1*).
Allegheny Ludlum Steel Corporation—West Leechburg Plant.	(OP)65–000–183	Westmoreland	3/23/99	10/16/01, 66 FR 52522	(c)(163)(i)(B)(*2*).
(Allegheny Ludlum Corporation) Jessop Steel Company—Washington Plant.	(OP)63–000–027	Washington	3/26/99	10/16/01, 66 FR 52522	(c)(163)(i)(B)(*3*).
Koppel Steel Corporation—Koppel Plant.	(OP)04–000–059	Beaver	3/23/01	10/16/01, 66 FR 52522	(c)(163)(i)(D).

(1) EPA-APPROVED SOURCE-SPECIFIC REASONABLY AVAILABLE CONTROL TECHNOLOGY (RACT) REQUIREMENTS FOR VOLATILE ORGANIC COMPOUNDS (VOC) AND OXIDES OF NITROGEN (NO_X)—Continued

Name of source	Permit No.	County	State effective date	EPA approval date	Additional explanation/ § 52.2063 citation
Consolidated Natural Gas (CNG) Transmission Corp.—Beaver Station.	OP–04–000–490	Beaver	6/23/95	10/12/01, 66 FR 52055	(c)(164)(i)(B)(*1*).
Consolidated Natural Gas (CNG) Transmission Corp.—Oakford Compressor Station.	OP–65–000–837	Westmoreland	10/13/95	10/12/01, 66 FR 52055	(c)(164)(i)(B)(*2*).
Consolidated Natural Gas (CNG) Transmission Corp.—South Oakford Station.	(OP)65–000–840	Westmoreland	10/13/95	10/12/01, 66 FR 52055	(c)(164)(i)(B)(*3*).
Consolidated Natural Gas (CNG) Transmission Corp.—Tonkin Compressor Station.	(OP)65–000–634	Westmoreland	10/13/95	10/12/01, 66 FR 52055	(c)(164)(i)(B)(*4*).
Consolidated Natural Gas (CNG) Transmission Corp.—Jeannette Station.	(OP)65–000–852	Westmoreland	10/13/95	10/12/01, 66 FR 52055	(c)(164)(i)(B)(*5*).
Carnegie Natural Gas Co.—Creighton Station.	EO–213	Allegheny	5/14/96	10/12/01, 66 FR 52055	(c)(164)(i)(B)(*6*).
Texas Eastern Transmission Corp.—Uniontown Station.	(OP)26–000–413	Fayette	12/20/96	10/12/01, 66 FR 52055	(c)(164)(i)(B)(*7*).
Consolidated Natural Gas (CNG) Transmission Corp.—South Bend Station.	OP–03–000–180	Armstrong	12/2/98	10/12/01, 66 FR 52055	(c)(164)(i)(B)(*8*).
Pruett Schaffer Chemical Company.	CO–266	Allegheny	9/2/98	10/12/01, 66 FR 52050	(c)(165)(i)(B)(*1*).
PPG Industries, Inc.—Springdale	CO–254	Allegheny	12/19/96	10/12/01, 66 FR 52050	(c)(165)(i)(B)(*2*).
Reichhold Chemicals, Inc.—Bridgeville.	CO–218	Allegheny	12/19/96	10/12/01, 66 FR 52050	(c)(165)(i)(B)(*3*) [NOX RACT].
Reichhold Chemicals, Inc.—Bridgeville.	CO–219	Allegheny	2/21/96	10/12/01, 66 FR 52050	(c)(165)(i)(B)(*4*) [VOC RACT].
Valspar Corporation—Pittsburgh	CO–209	Allegheny	3/8/96	10/12/01, 66 FR 52050	(c)(165)(i)(B)(*5*).
Ashland Chemical Corporation	CO–227	Allegheny	12/30/96	10/16/01, 66 FR 52506	(c)(166)(i)(B)(*1*).
Hercules, Inc.—West Elizabeth	EO–216	Allegheny	3/8/96	10/16/01, 66 FR 52506	(c)(166)(i)(B)(*2*).
Hercules, Inc.—West Elizabeth	CO–257	Allegheny	1/14/97 11/1/99	10/16/01, 66 FR 52506	(c)(166)(i)(B)(*3*).
Neville Chemical Company	CO–230	Allegheny	12/13/96	10/16/01, 66 FR 52506	(c)(166)(i)(B)(*4*).
Anchor Glass Container Corp.—Plant 5.	(PA)26–000–119	Fayette	12/20/96	10/16/01, 66 FR 52527	(c)(167)(i)(B)(*1*).
Anchor Hocking Specialty Glass Co.—Phoenix Glass Plant.	(OP)04–000–084	Beaver	10/13/95	10/16/01, 66 FR 52527	(c)(167)(i)(B)(*2*).
Corning Consumer Products Co.—Charleroi Plant.	(PA)63–000–110	Washington	1/4/96	10/16/01, 66 FR 52527	(c)(167)(i)(B)(*3*).
General Electric Company	CO–251	Allegheny	12/19/96	10/16/01, 66 FR 52527	(c)(167)(i)(B)(*4*).
Glenshaw Glass Company, Inc	CO–270	Allegheny	3/10/00	10/16/01, 66 FR 52527	(c)(167)(i)(B)(*5*).
Guardian Industries Corp	CO–242	Allegheny	8/27/96	10/16/01, 66 FR 52527	(c)(167)(i)(B)(*6*).
Allegheny County Sanitary Authority.	CO–222	Allegheny	5/14/96	10/16/01, 66 FR 52527	(c)(167)(i)(B)(*7*).
Browning-Ferris Industries	CO–231A	Allegheny	4/28/97	10/16/01, 66 FR 52527	(c)(167)(i)(B)(*8*).
Chambers Development Company—Monroeville Borough Landfill.	CO–253	Allegheny	12/30/96	10/16/01, 66 FR 52527	(c)(167)(i)(B)(*9*).
Kelly Run Sanitation, Forward Township Landfill.	CO–236	Allegheny	1/23/97	10/16/01, 66 FR 52527	(c)(167)(i)(B)(*10*).
Stroehmann Bakeries—Montgomery County (Norristown).	PA–46–0003	Montgomery	5/4/95	10/31/01, 66 FR 54942	(c)(169)(i)(B)(*1*).
Schlosser Steel, Inc	OP–46–0051	Montgomery	2/1/96	10/31/01, 66 FR 54942	(c)(169)(i)(B)(*2*).
Perkasie Industries Corp.—Perkasie.	OP–09–0011	Bucks	8/14/96	10/31/01, 66 FR 54942	(c)(169)(i)(B)(*3*).
Quaker Chemical Corporation—Conshohocken.	OP–46–0071	Montgomery	9/26/96	10/31/01, 66 FR 54942	(c)(169)(i)(B)(*4*).
Worthington Steel Company	OP–15–0016	Chester	7/23/96	10/31/01, 66 FR 54942	(c)(169)(i)(B)(*5*).
Transcontinental Gas Pipeline Corp.—Sta. 200, Frazer.	PA–15–0017	Chester	6/5/95	10/31/01, 66 FR 54942	(c)(169)(i)(B)(*6*).
Rohm and Haas Company, Bucks County Plant.	OP–09–0015	Bucks	4/20/99	10/31/01, 66 FR 54942	(c)(169)(i)(B)(*7*).
SEPTA—Berridge/Courtland Maintenance Shop.	PA–51–4172	Philadelphia	7/27/99	10/31/01, 66 FR 54942	(c)(169)(i)(B)(*8*).
Southwest Water Pollution Control Plant/Biosolids Recycling Center.	PA–51–9515	Philadelphia	7/27/99	10/31/01, 66 FR 54942	(c)(169)(i)(B)(*9*).

(1) EPA-APPROVED SOURCE-SPECIFIC REASONABLY AVAILABLE CONTROL TECHNOLOGY (RACT) REQUIREMENTS FOR VOLATILE ORGANIC COMPOUNDS (VOC) AND OXIDES OF NITROGEN (NO_X)—Continued

Name of source	Permit No.	County	State effective date	EPA approval date	Additional explanation/ § 52.2063 citation
Rohm and Haas Company—Philadelphia Plant.	PA–51–1531	Philadelphia	7/27/99	10/31/01, 66 FR 54942	(c)(169)(i)(B)(*10*).
Sunoco Inc. (R&M)—Philadelphia	PA(51–)1501 PA(51–)1517	Philadelphia	8/1/00	10/31/01, 66 FR 54942	(c)(169)(i)(B)(*11*).
SBF Communications (owned by Avant Garde Ent.).	PA(51–)2197	Philadelphia	7/21/00	10/31/01, 66 FR 54942	(c)(169)(i)(B)(*12*).
Smith-Edwards-Dunlap Company	PA–(51–)2255	Philadelphia	7/14/00	10/31/01, 66 FR 54942	(c)(169)(i)(B)(*13*).
Tasty Baking Co	PLID (51–) 2054	Philadelphia	4/9/95	10/31/01, 66 FR 54942	(c)(169)(i)(B)(*14*).
Armstrong World Industries, Inc.—Beaver Falls Plant.	(OP)04–000–108	Beaver	5/29/96	10/17/01, 66 FR 52695	(c)(170)(i)(B)(*1*).
Bacharach, Inc	CO–263	Allegheny	10/10/97	10/17/01, 66 FR 52695	(c)(170)(i)(B)(*2*).
Bakerstown Container Corporation.	CO–221	Allegheny	5/14/96	10/17/01, 66 FR 52695	(c)(170)(i)(B)(*3*).
Chestnut Ridge Foam, Inc.—Latrobe.	(OP)65–000–181	Westmoreland	12/29/95	10/17/01, 66 FR 52695	(c)(170)(i)(B)(*4*).
Flexsys America LP, Monongahela Plant.	(OP)63–000–015	Washington	3/23/01	10/17/01, 66 FR 52695	(c)(170)(i)(B)(*5*).
Haskell of Pittsburgh, Inc	CO–224	Allegheny	12/19/96	10/17/01, 66 FR 52695	(c)(170)(i)(B)(*6*).
Three Rivers Aluminum Company (TRACO).	OP–10–267	Butler	3/1/01	10/17/01, 66 FR 52695	(c)(170)(i)(B)(*7*).
Tuscarora Plastics, Inc	(OP)04–000–497	Beaver	4/3/96	10/17/01, 66 FR 52695	(c)(170)(i)(B)(*8*).
Witco Corporation	CO–210	Allegheny	5/14/96	10/17/01, 66 FR 52695	(c)(170)(i)(B)(*9*).
GenCorp (Plastic Films Division)—Jeannette Plant.	(OP)65–000–207	Westmoreland	1/4/96	10/15/01, 66 FR 52322	(c)(171)(i)(B).
CENTRIA—Ambridge Coil Coating Operations Plant.	(OP)04–000–043	Beaver	5/17/99	10/15/01, 66 FR 52322	(c)(171)(i)(D).
J & L Structural, Inc.—Aliquippa	OP–04–000–467	Beaver	6/23/95	10/16/01, 66 FR 52511	(c)(172)(i)(B)(*1*).
Universal Stainless & Alloy Products, Inc.	CO–241	Allegheny	12/19/96	10/16/01, 66 FR 52511	(c)(172)(i)(B)(*2*).
Shenango, Inc	CO–233	Allegheny	12/30/96	10/16/01, 66 FR 52511	(c)(172)(i)(B)(*3*).
LTV Steel Company	CO–259	Allegheny	12/30/96	10/16/01, 66 FR 52511	(c)(172)(i)(B)(*4*).
U.S. Steel (USX Corporation.)—Clairton Works.	CO–234	Allegheny	12/30/96	10/16/01, 66 FR 52511	(c)(172)(i)(B)(*5*).
USX Corporation—Edgar Thomson Works.	CO–235	Allegheny	12/30/96	10/16/01, 66 FR 52511	(c)(172)(i)(B)(*6*).
USX, Inc.—Irvin Works	CO–258	Allegheny	12/30/96	10/16/01, 66 FR 52511	(c)(172)(i)(B)(*7*).
Wheeling-Pittsburgh Steel Corporation—Allenport Plant.	(OP)63–000–066	Washington	2/8/99	10/16/01, 66 FR 52511	(c)(172)(i)(B)(*8*).
Koppers—Monessen Coke Plant	(OP)65–000–853	Westmoreland	3/20/98	10/16/01, 66 FR 52511	(c)(172)(i)(B)(*9*).
J & L Specialty Steel, Inc.—Midland Facility.	(OP)04–000–013	Beaver	3/23/01	10/16/01, 66 FR 52511	(c)(172)(i)(B)(*10*).
Washington Steel Corp.—Washington Plant.	(OP)63–000–023	Washington	9/12/96	10/16/01, 66 FR 52511	(c)(172)(i)(B)(*11*).
Equitrans, Inc.—Hartson	(OP)63–000–642	Washington	7/10/95	10/17/01, 66 FR 52705	(c)(173)(i)(B)(*1*).
Witco Corp.—Petrolia Facility	PA–10–037	Butler	6/27/95	10/17/01, 66 FR 52705	(c)(173)(i)(B)(*2*).
Ranbar Electrical Materials Inc. (formerly Westinghouse Electric Co. EMD)—Manor.	(OP)65–000–042	Westmoreland	2/22/99	10/17/01, 66 FR 52705	(c)(173)(i)(B)(*3*).
Nova Chemicals, Inc. (formerly Arco Chemical Co.—Beaver Valley).	(OP)04–000–033	Beaver	4/16/99 1/24/01	10/17/01, 66 FR 52705	(c)(173)(i)(B)(*4*).
BASF Corporation—Monaca Site	(OP)04–000–306	Beaver	3/23/01	10/17/01, 66 FR 52705	(c)(173)(i)(B)(*5*).
Cardone Industries—Rising Sun Ave.	PA(51–) PLID 3887	Philadelphia	5/29/95	10/30/01, 66 FR 54710	(c)(174)(i)(B)(*1*).
Cardone Industries—Chew St	PA(51–) PLID 2237	Philadelphia	5/29/95	10/30/01, 66 FR 54710	(c)(174)(i)(B)(*2*).
U.S. Navy, Naval Surface Warfare Center—Carderock Division.	PA(51–)9724	Philadelphia	12/27/97	10/30/01, 66 FR 54710	(c)(174)(i)(B)(*3*).
Wheelabrator Falls, Inc	OP–09–0013	Bucks	1/11/96 5/17/96	10/30/01, 66 FR 54710	(c)(174)(i)(B)(*4*).
US Steel Group/USX Corporation—Fairless Works.	OP–09–0006	Bucks	4/8/99	10/30/01, 66 FR 54710	(c)(174)(i)(B)(*5*).
Brown Printing Company	OP–46–0018A	Montgomery	5/17/00	10/30/01, 66 FR 54710	(c)(174)(i)(B)(*6*).
Sun Chemical—General Printing Ink Division.	PA(51–) 2052	Philadelphia	7/14/00	10/30/01, 66 FR 54710	(c)(174)(i)(B)(*7*).
Sunoco Chemicals, Frankford Plant.	PA(51–) 1551	Philadelphia	7/27/99	10/30/01, 66 FR 54710	(c)(174)(i)(B)(*8*).
Armco, Inc. Butler Operations Main Plant.	PA–10–001M	Butler	2/23/96	10/15/01, 66 FR 52338	(c)(175)(i)(B).

(1) EPA-APPROVED SOURCE-SPECIFIC REASONABLY AVAILABLE CONTROL TECHNOLOGY (RACT) REQUIREMENTS FOR VOLATILE ORGANIC COMPOUNDS (VOC) AND OXIDES OF NITROGEN (NO_X)—Continued

Name of source	Permit No.	County	State effective date	EPA approval date	Additional explanation/ § 52.2063 citation
Armco, Inc. Butler Operations Stainless Plant.	PA–10–001S	Butler	2/23/96	10/15/01, 66 FR 52338	(c)(175)(i)(C).
Pennsylvania Power Co.—Bruce Mansfield Plant.	(PA)04–000–235	Beaver	12/29/94	10/15/01, 66 FR 52333	(c)(176)(i)(B)(*1*).
West Penn Power Co.—Mitchell Station.	(PA)63–000–016	Washington	6/12/95	10/15/01, 66 FR 52333	(c)(176)(i)(B)(*2*).
Carnegie Natural Gas Company—Fisher Station.	(OP)03–000–182	Armstrong	12/2/98	10/15/01, 66 FR 52333	(c)(176)(i)(B)(*3*).
Apollo Gas Company—Shoemaker Station.	(OP)03–000–183	Armstrong	9/12/96	10/15/01, 66 FR 52333	(c)(176)(i)(B)(*4*).
Texas Eastern Transmission Corp.—Delmont Station.	(OP)65–000–839	Westmoreland	1/9/97	10/15/01, 66 FR 52333	(c)(176)(i)(B)(*5*).
The Peoples Natural Gas Co.—Valley Station.	(OP)03–000–125	Armstrong	10/31/94	10/15/01, 66 FR 52333	(c)(176)(i)(B)(*6*).
The Peoples Natural Gas Co.—Girty Compressor Station.	(PA)03–000–076	Armstrong	10/27/95	10/15/01, 66 FR 52333	(c)(176)(i)(B)(*7*).
AES Beaver Valley Partners—Monaca Plant.	(OP)04–000–446	Beaver	3/23/01	10/15/01, 66 FR 52333	(c)(176)(i)(B)(*8*).
Penreco—Karns City	OP–10–0027	Butler	5/31/95	10/12/01, 66 FR 52044	(c)(177)(i)(B)(*1*).
Ashland Petroleum Company	CO–256	Allegheny	12/19/96	10/12/01, 66 FR 52044	(c)(177)(i)(B)(*2*).
Bellefield Boiler Plant—Pittsburgh	EO–248	Allegheny	12/19/96	10/12/01, 66 FR 52044	(c)(177)(i)(B)(*3*).
Gulf Oil, L.P	CO–250	Allegheny	12/19/96	10/12/01, 66 FR 52044	(c)(177)(i)(B)(*4*).
PA Dept. of Corrections	EO–244	Allegheny	1/23/97	10/12/01, 66 FR 52044	(c)(177)(i)(B)(*5*).
Pittsburgh Thermal Limited Partnership.	CO–220	Allegheny	3/4/96	10/12/01, 66 FR 52044	(c)(177)(i)(B)(*6*).
BP Exploration & Oil, Inc.—Greensburg Terminal.	(OP)65–000–378	Westmoreland	3/23/01	10/12/01, 66 FR 52044	(c)(177)(i)(B)(*7*).
Pittsburgh Allegheny County Thermal, Ltd.	CO–265	Allegheny	11/9/98	10/12/01, 66 FR 52044	(c)(177)(i)(B)(*8*).
Aristech Chemical Corporation	CO–232	Allegheny	12/30/96	10/17/01, 66 FR 52700	(c)(178)(i)(B)(*1*).
Heinz U.S.A.—Pittsburgh	EO–211	Allegheny	3/8/96	10/17/01, 66 FR 52700	(c)(178)(i)(B)(*2*).
Heinz U.S.A.—Pittsburgh	CO–247	Allegheny	10/24/96	10/17/01, 66 FR 52700	(c)(178)(i)(B)(*2*).
Koppers Industries, Inc. (Aristech Chem. Corp).	CO–223	Allegheny	8/27/96	10/17/01, 66 FR 52700	(c)(178)(i)(B)(*3*).
Nabisco Biscuit Co	CO–246	Allegheny	12/19/96	10/17/01, 66 FR 52700	(c)(178)(i)(B)(*4*).
Pressure Chemical Co	CO–261	Allegheny	6/11/97	10/17/01, 66 FR 52700	(c)(178)(i)(B)(*5*).
General Carbide Corp	(OP)65–000–622	Westmoreland	12/29/95	10/17/01, 66 FR 52700	(c)(178)(i)(B)(*6*).
Fansteel Hydro Carbide	(OP)65–000–860	Westmoreland	12/12/97	10/17/01, 66 FR 52700	(c)(178)(i)(B)(*7*).
Carbidie Corporation	(OP)65–000–720	Westmoreland	7/31/98	10/17/01, 66 FR 52700	(c)(178)(i)(B)(*8*).
Dyno Nobel Inc—Donora	(OP)63–000–070	Washington	3/31/99	10/17/01, 66 FR 52700	(c)(178)(i)(B)(*9*).
Newcomer Products, Inc	(OP)65–000–851	Westmoreland	8/7/97	10/17/01, 66 FR 52700	(c)(178)(i)(B)(*10*).
PECO Energy Company—Cromby Generating Station.	OP–15–0019	Chester	4/28/95	10/30/01, 66 FR 54699	(c)(179)(i)(B)(*1*).
Waste Resource Energy, Inc. (Operator); Shawmut Bank, Conn. National Assoc. (Owner); Delaware County Resource Recovery Facility.	OP–23–0004	Delaware	11/16/95	10/30/01, 66 FR 54699	(c)(179)(i)(B)(*2*).
G-Seven, Ltd	OP–46–0078	Montgomery	4/20/99	10/30/01, 66 FR 54699	(c)(179)(i)(B)(*3*).
Leonard Kunkin Associates	OP–09–0073	Bucks	6/25/01	10/30/01, 66 FR 54699	(c)(179)(i)(B)(*4*).
Kimberly-Clark Corporation	OP–23–0014A	Delaware	6/24/98 8/1/01	10/30/01, 66 FR 54699	(c)(179)(i)(B)(*5*).
Sunoco, Inc. (R&M); Marcus Hook Plant.	CP–23–0001	Delaware	6/8/95 8/2/01	10/30/01, 66 FR 54699	(c)(179)(i)(B)(*6*).
Waste Management Disposal Services of Pennsylvania, Inc. (GROWS Landfill).	OP–09–0007	Bucks	12/19/97 7/17/01	10/30/01, 66 FR 54699	(c)(179)(i)(B)(*7*).
Koppel Steel Corporation—Ambridge Plant.	OP–04–000–227	Beaver	10/12/00	10/15/01, 66 FR 52317	(c)(180)(i)(B).
General Motors Corporation	CO–243	Allegheny	8/27/96	10/15/01, 66 FR 52327	(c)(181)(i)(B)(*1*).
Oakmont Steel, Inc	CO–226	Allegheny	5/14/96	10/15/01, 66 FR 52327	(c)(181)(i)(B)(*2*).
The Peoples Natural Gas Co	CO–240	Allegheny	8/27/96	10/15/01, 66 FR 52327	(c)(181)(i)(B)(*3*).
U.S. Bureau of Mines	EO–215	Allegheny	3/8/96	10/15/01, 66 FR 52327	(c)(181)(i)(B)(*4*).
Waste Management Disposal Services of Pennsylvania (Pottstown Landfill).	OP–46–0033	Montgomery	4/20/99	10/30/01, 66 FR 54704	(c)(182)(i)(B)(*1*).
FPL Energy MH50, LP (Sunoco, Inc. (R&M)).	PA–23–0084	Delaware	7/26/99	10/30/01, 66 FR 54704	(c)(182)(i)(B)(*2*).

(1) EPA-APPROVED SOURCE-SPECIFIC REASONABLY AVAILABLE CONTROL TECHNOLOGY (RACT) REQUIREMENTS FOR VOLATILE ORGANIC COMPOUNDS (VOC) AND OXIDES OF NITROGEN (NO_X)—Continued

Name of source	Permit No.	County	State effective date	EPA approval date	Additional explanation/ § 52.2063 citation
Exelon Generation Company—(PECO)—Richmond Generating Station.	PA–51–4903	Philadelphia	7/11/01	10/30/01, 66 FR 54704	(c)(182)(i)(B)(*3*).
Jefferson Smurfit Corp./Container Corp. of America.	PLID (PA–51–) 1566	Philadelphia	4/10/95	10/31/01, 66 FR 54947	(c)(184)(i)(B)(*1*).
Maritank Philadelphia, Inc	PLID (PA–51–) 5013	Philadelphia	12/28/95	10/31/01, 66 FR 54947	(c)(184)(i)(B)(*2*).
Moyer Packing Company	OP–46–0001	Montgomery	3/15/96	10/31/01, 66 FR 54947	(c)(184)(i)(B)(*3*).
Tullytown Resource Recovery Facility (Waste Management of Pa., Inc.).	OP–09–0024	Bucks	7/14/97	10/31/01, 66 FR 54947	(c)(184)(i)(B)(*4*).
SPS Technologies, Inc	OP–46–0032	Montgomery	10/30/97	10/31/01, 66 FR 54947	(c)(184)(i)(B)(*5*).
PECO Energy Company	OP–09–0077	Bucks	12/19/97	10/31/01, 66 FR 54947	(c)(184)(i)(B)(*6*).
Philadelphia Gas Works—Richmond Plant.	PA–51–4922	Philadelphia	7/27/99	10/31/01, 66 FR 54947	(c)(184)(i)(B)(*7*).
Exelon Generation Company—Delaware Generating Station.	PA–51–4901	Philadelphia	7/11/01	10/31/01, 66 FR 54947	(c)(184)(i)(B)(*8*).
Exelon Generation Company—Schuylkill Generating Station.	PA–51–4904	Philadelphia	7/11/01	10/31/01, 66 FR 54947	(c)(184)(i)(B)(*9*).
International Business Systems, Inc.	OP–46–0049	Montgomery	10/29/98	10/30/01, 66 FR 54691	(c)(185)(i)(B)(*1*).
Bethlehem Lukens Plate	OP–46–0011	Montgomery	12/11/98	10/30/01, 66 FR 54691	(c)(185)(i)(B)(*2*).
Montenay Montgomery Limited Partnership.	OP–46–0010A	Montgomery	4/20/99 6/20/00	10/30/01, 66 FR 54691	(c)(185)(i)(B)(*3*).
Northeast Foods, Inc. (Bake Rite Rolls).	OP–09–0014	Bucks	4/9/99	10/30/01, 66 FR 54691	(c)(185)(i)(B)(*4*).
Aldan Rubber Company	PA–(51–)1561	Philadelphia	7/21/00	10/30/01, 66 FR 54691	(c)(185)(i)(B)(*5*).
Braceland Brothers, Inc	PA–(51–)3679	Philadelphia	7/14/00	10/30/01, 66 FR 54691	(c)(185)(i)(B)(*6*).
Graphic Arts, Incorporated	PA–(51–)2260	Philadelphia	7/14/00	10/30/01, 66 FR 54691	(c)(185)(i)(B)(*7*).
O'Brien (Philadelphia) Cogeneration, Inc.—Northeast Water Pollution Control Plant.	PA–(51–)1533	Philadelphia	7/21/00	10/30/01, 66 FR 54691	(c)(185)(i)(B)(*8*).
O'Brien (Philadelphia) Cogeneration, Inc.—Southwest Water Pollution Control Plant.	PA–(51–)1534	Philadelphia	7/21/00	10/30/01, 66 FR 54691	(c)(185)(i)(B)(*9*).
Pearl Pressman Liberty	PA–(51–)7721	Philadelphia	7/24/00	10/30/01, 66 FR 54691	(c)(185)(i)(B)(*10*).
Arbill Industries, Inc	PA–51–3811	Philadelphia	7/27/99	10/30/01, 66 FR 54691	(c)(185)(i)(B)(*11*).
McWhorter Technologies, Inc	PA–51–3542	Philadelphia	7/27/99	10/30/01, 66 FR 54691	(c)(185)(i)(B)(*12*).
NortheastWater Pollution Control Plant.	PA–51–9513	Philadelphia	7/27/99	10/30/01, 66 FR54691	(c)(185)(i)(B)(*13*).
Newman and Company	PLID (51–) 3489	Philadelphia	6/11/97	10/30/01, 66 FR 54691	(c)(185)(i)(B)(*14*).
Allegheny Ludlum Steel Corporation.	(OP–)65–000–137	Westmoreland	5/17/99	10/19/01, 66 FR 53090	(c)(186)(i)(B)(*1*).
INDSPEC Chemical Corporation	PA10–021	Butler	10/19/98	10/19/01, 66 FR 53090	(c)(186)(i)(B)(*2*).
Stoney Creek Technologies, L.L.C.	PA–23–0002	Delaware	2/24/99	11/5/01, 66 FR 55880	(c)(187)(i)(B)(*1*).
Superpac, Inc	OP–09–0003	Bucks	3/25/99	11/5/01, 66 FR 55880	(c)(187)(i)(B)(*2*).
Transit America, Inc	PLID (51–) 1563	Philadelphia	6/11/97	11/5/01, 66 FR 55880	(c)(187)(i)(B)(*3*).
American Bank Note Company	OP–46–0075	Montgomery	5/19/97 8/10/98	11/5/01, 66 FR 55880	(c)(187)(i)(B)(*4*).
Atlas Roofing Corporation—Quakertown.	OP–09–0039	Bucks	3/10/99	11/5/01, 66 FR 55880	(c)(187)(i)(B)(*5*).
Beckett Corporation	OP–15–0040	Chester	7/8/97	11/5/01, 66 FR 55880	(c)(187)(i)(B)(*6*).
Klearfold, Inc	OP–09–0012	Bucks	4/15/99	11/5/01, 66 FR 55880	(c)(187)(i)(B)(*7*).
National Label Company	OP–46–0040	Montgomery	7/28/97	11/5/01, 66 FR 55880	(c)(187)(i)(B)(*8*).
Bethlehem Steel Corporation	OP–22–02012	Dauphin	4/9/99	5/23/02, 67 FR 36108	(c)(191).
Hershey Chocolate USA	OP–22–2004A	Dauphin	1/24/00	6/26/02, 67 FR 43002	(c)(194)(i)(B)(*1*).
Pennsylvania Power Company New Castle Plant.	OP–37–0023	Lawrence	4/8/99	6/26/02, 67 FR 43002	(c)(194)(i)(B)(*2*).
Lafarge Corporation	OP–39–0011B	Lehigh	5/19/97	4/1/03, 68 FR 15661	(c)(196)(i)(B)(*1*).
The Peoples Natural Gas Company.	(OP–)11–000–356	Cambria	11/23/94	4/1/03, 68 FR 15661	(c)(196)(i)(B)(*2*).
Horsehead Resource Development Company, Inc.	OP–13–0001	Carbon	5/16/95	4/1/03, 68 FR 15661	(c)(196)(i)(B)(*3*).
Williams Generation Company—Hazelton.	OP–40–0031A	Luzerne	3/10/00	4/1/03, 68 FR 15661	(c)(196)(i)(B)(*4*).
Pennsylvania Power and Light Company, Holtwood Steam Electric Station.	PA–36–2016	Lancaster	5/25/95	4/1/03, 68 FR 15661	(c)(196)(i)(B)(*5*).

(1) EPA-APPROVED SOURCE-SPECIFIC REASONABLY AVAILABLE CONTROL TECHNOLOGY (RACT) REQUIREMENTS FOR VOLATILE ORGANIC COMPOUNDS (VOC) AND OXIDES OF NITROGEN (NO_X)—Continued

Name of source	Permit No.	County	State effective date	EPA approval date	Additional explanation/ § 52.2063 citation
General Electric Transportation Systems.	OP–25–025A	Erie	8/26/02	4/7/03, 68 FR 16724	(c)(198)(i)(B).
Bethlehem Structural Products Corporation.	OP–48–0013	Northampton	10/24/96	5/2/03, 68 FR 23404	(c)(200)(i)(B)(*1*).
International Paper Company, Erie Mill.	PA–25–028	Erie	12/21/94	5/2/03, 68 FR 23404	(c)(200)(i)(B)(*2*).
National Fuel Gas Supply—Heath Compressor Station.	PA–33–144A	Jefferson	10/5/98	5/2/03, 68 FR 23404	(c)(200)(i)(B)(*3*).
PPG Industries, Inc	OP–20–145	Crawford	5/31/95	3/24/03, 68 FR14154	(c)(201)(i)(B).
Dominion Trans., Inc.—Finnefrock Station.	Title V–18–00005	Clinton	2/16/00	5/7/03, 68 FR 24365	(c)(202)(i)(B)(*1*).
Textron Lycoming—Oliver Street Plant.	Title V–41–00005	Lycoming	1/12/01	5/7/03, 68 FR 24365	(c)(202)(i)(B)(*2*).
Lafayette College, Easton Campus.	OP–48–0034	Northampton	8/18/97	5/20/03, 68 FR 27471	(c)(205)(i)(B).
Keystone Carbon Company	OP–24–016	Elk	5/15/95	10/17/03, 68 FR 59741	(c)(207)(i)(B)(*1*).
Mack Trucks, Inc	OP–39–0004	Northampton	5/31/95	10/17/03, 68 FR 59741	(c)(207)(i)(B)(*1*).
Owens-Brockway Glass Container, Inc.	OP–33–033	Jefferson	3/27/95	10/17/03, 68 FR 59741	(c)(207)(i)(B)(*1*).
Resilite Sport Products, Inc	OP–49–0003	Northumberland	12/3/96	10/17/03, 68 FR 59741	(c)(207)(i)(B)(*1*).
Westfield Tanning Company	OP–59–0008	Tioga	11/27/96	10/17/03, 68 FR 59741	(c)(207)(i)(B)(*1*).
Tarkett, Incorporated	OP–39–0002	Lehigh	5/31/95	8/6/03, 68 FR 46487	(c)(208)(i)(B)(*1*).
Hacros Pigments, Inc	OP–48–0018	Northampton	7/31/96	8/6/03, 68 FR 46487	(c)(208)(i)(B)(*2*).
GPU Generation Corp., Homer City Station.	(OP–)32–000–055	Indiana	10/29/98	10/15/03, 68 FR 59321	(c)(212)(i)(B)(*1*).
GPU Generation Corp., Seward Station.	(OP–)32–000–040	Indiana	4/30/98	10/15/03, 68 FR 59321	(c)(212)(i)(B)(*2*).
Ebensburg Power Company, Ebensburg Cogeneration Plant.	(OP–)11–000–318	Cambria	3/28/01	10/15/03, 68 FR 59321	(c)(212)(i)(B)(*3*).
Sithe Pennsylvania Holdings, LLC, Warren Station.	OP–62–012B	Warren	1/20/00	10/15/03, 68 FR 59321	(c)(212)(i)(B)(*4*).
Pennsylvania Power & Light Company, Sunbury SES.	OP–55–0001A	Snyder	7/7/97	10/15/03, 68 FR 59321	(c)(212)(i)(B)(*5*).
Lakeview Landfill	OP–25–920	Erie	5/29/97	10/15/03, 68 FR 59321	(c)(212)(i)(B)(*6*).
National Fuel Gas Supply Corp.—Roystone Compressor Station.	OP–62–141F	Warren	4/1/03	10/27/04, 69 FR 62583	(c)(213)(i)(B)(*1*).
Crompton Corporation, Fairview Township.	OP–10–037	Butler	6/4/03	5/25/04, 69 FR 29444	(c)(213)(i)(B)(*2*).
Andritz, Inc	41–00010C	Lycoming	4/30/03	10/15/03, 68 FR 59318	(c)(214)(i)(B)(*1*).
Brodart Company	18–0007A	Clinton	4/8/03	10/15/03, 68 FR 59318	(c)(214)(i)(B)(*2*).
Erie Sewer Authority	OP–25–179	Erie	6/5/03	10/15/03, 68 FR 59318	(c)(214)(i)(B)(*3*).
Hercules Cement Company	OP–48–0005A	Northampton	4/16/99	11/24/03, 68 FR 65846	(c)(217)(i)(B).
Tennessee Gas Pipeline Company, Station 321.	OP–58–00001A	Susquehanna	4/16/98	10/27/04, 69 FR 62585	(c)(218)(i)(B)(*1*).
Tennessee Gas Pipeline Company, Station 219.	OP–43–0272	Mercer	4/7/99	10/27/04, 69 FR 62585	(c)(218)(i)(B)(*2*).
Information Display Technology, Inc.	32–000–085	Indiana	1/11/96	03/29/05, 70 FR 15774	52.2020(d)(1)(h).
Bedford Materials Co., Inc	05–02005	Bedford	4/15/99	03/29/05, 70 FR 15774	52.2020(d)(1)(h).
Bollman Hat Company	36–2031	Lancaster	7/3/95	03/29/05, 70 FR 15774	52.2020(d)(1)(h).
Armco Inc	OP–43–040	Mercer	9/30/99	03/29/05, 70 FR 15774	52.2020(d)(1)(h).
Specialty Tires of America, Inc	32–000–065	Indiana	1/6/00	03/29/05, 70 FR 15774	52.2020(d)(1)(h).
Truck Accessories Group East	OP–49–0005	Northumberland	3/26/99	03/29/05, 70 FR 15774	52.2020(d)(1)(h).
Jeraco Enterprises, Inc	OP–49–0014	Northumberland	4/6/97	03/29/05, 70 FR 15774	52.2020(d)(1)(h).
Insulation Corporation of America	39–0012	Lehigh	10/17/95	03/29/05, 70 FR 15774	52.2020(d)(1)(h).
Pope & Talbot, Inc	40–0019	Luzerne	5/31/96	03/29/05, 70 FR 15774	52.2020(d)(1)(h).
Universal Rundle Corporation	OP–37–059	Lawrence	5/31/95	03/29/05, 70 FR 15774	52.2020(d)(1)(h).
Clark Filter	36–02040	Lancaster	2/4/00	03/29/05, 70 FR 15774	52.2020(d)(1)(h).
The Pennsylvania State University—University Park.	OP–14–0006	Centre	12/30/98	3/30/05, 70 FR 16118	52.2020(d)(1)(c).
Tennessee Gas Pipeline Company—Charleston Township.	OP–59–0001	Tioga	5/31/95	3/30/05, 70 FR 16118	52.2020(d)(1)(c).
Tennessee Gas Pipeline Company—Wyalusing Township.	OP–08–0002	Bradford	5/31/95	3/30/05, 70 FR 16118	52.2020(d)(1)(c).
Masland Industries	21–2001	Cumberland	5/31/95	3/30/05, 70 FR 16118	52.2020(d)(1)(c).
ESSROC Cement Corp	OP–37–003	Lawrence	7/27/95 3/31/99	3/30/05, 70 FR 16118	52.2020(d)(1)(c).
The Magee Carpet Company	OP–19–0001	Columbia	1/22/97	3/30/05, 70 FR 16118	52.2020(d)(1)(c).

(1) EPA-APPROVED SOURCE-SPECIFIC REASONABLY AVAILABLE CONTROL TECHNOLOGY (RACT) REQUIREMENTS FOR VOLATILE ORGANIC COMPOUNDS (VOC) AND OXIDES OF NITROGEN (NO_X)—Continued

Name of source	Permit No.	County	State effective date	EPA approval date	Additional explanation/ § 52.2063 citation
Tennessee Gas Pipeline Company—Howe Township.	OP–27–015	Forest	7/27/00	3/30/05, 70 FR 16118	52.2020(d)(1)(c).
Transcontinental Gas Pipeline Corporation—Buck Township.	40–0002 40–0002A	Luzerne	5/31/95	3/30/05, 70 FR 16118	52.2020(d)(1)(c).
Transcontinental Gas Pipe Line Corporation—Peach Bottom Township.	67–2012	York	5/5/95	3/30/05, 70 FR 16118	52.2020(d)(1)(c).
Standard Steel Division of Freedom Forge Corp.	44–2001	Mifflin	5/31/95	3/30/05, 70 FR 16118	52.2020(d)(1)(c).
Pope and Talbot, Inc	35–0004	Lackawanna	5/31/96	3/30/05, 70 FR 16124	52.2020 (d)(1)(d).
Pennsylvania Power and Light Company.	22–2011	Dauphin	6/7/95	3/30/05, 70 FR 16124	52.2020 (d)(1)(d).
Ellwood Group Inc	OP–37–313	Lawrence	1/31/01	3/30/05, 70 FR 16124	52.2020 (d)(1)(d).
National Fuel Gas Supply Corporation.	53–0009A 53–0009	Potter	8/5/96	3/30/05, 70 FR 16124	52.2020 (d)(1)(d).
Department of the Army	28–02002	Franklin	2/3/00	3/31/05, 70 FR 16416	52.2020(d)(1)(g).
Harley-Davidson Motor Company	67–2032	York	4/9/97	3/31/05, 70 FR 16416	52.2020(d)(1)(g).
GE Transportation Systems	OP–43–196	Mercer	5/16/01	3/31/05, 70 FR 16416	52.2020(d)(1)(g).
Stone Container Corporation	67–2002	York	9/3/96	3/31/05, 70 FR 16416	52.2020(d)(1)(g).
Stanley Storage Systems, Inc	39–0031	Lehigh	6/12/98	3/31/05, 70 FR 16416	52.2020(d)(1)(g).
York Group, Inc	67–2014	York	7/3/95	3/31/05, 70 FR 16416	52.2020(d)(1)(g).
Strick Corporation	OP–19–0002	Columbia	6/6/97	3/31/05, 70 FR 16416	52.2020(d)(1)(g).
Grumman Olson, Division of Grumman Allied Industries.	OP–41–0002	Lycoming	9/25/97	3/31/05, 70 FR 16416	52.2020(d)(1)(g).
Prior Coated Metals, Inc	39–0005	Lehigh	5/26/95	3/31/05, 70 FR 16416	52.2020(d)(1)(g).
Schindler Elevator Corporation	01–2007	Adams	5/24/95	3/31/05, 70 FR 16416	52.2020(d)(1)(g).
Hodge Foundry	OP–43–036	Mercer	3/31/99	3/31/05, 70 FR 16420	52.2020(d)(1)(a).
Resolite, A United Dominion Co	OP–10–266	Butler	10/15/99 2/18/00	3/31/05, 70 FR 16420	52.2020(d)(1)(a).
Consolidation Coal Co.—Coal Preparation Plant.	30–000–063	Greene	5/17/99	3/31/05, 70 FR 16420	52.2020(d)(1)(a).
Urick Foundry	OP–25–053	Erie	10/24/96	3/31/05, 70 FR 16420	52.2020(d)(1)(a).
Keystone Sanitary Landfill, Inc	35–0014	Lackawanna	4/19/99	3/31/05, 70 FR 16420	52.2020(d)(1)(a).
Grinnell Corporation	36–2019	Lancaster	6/30/95	3/31/05, 70 FR 16420	52.2020(d)(1)(a).
Buck Company Inc	36–2035	Lancaster	8/1/95	3/31/05, 70 FR 16420	52.2020(d)(1)(a).
Owens-Brockway Glass Container, Inc.	OP–16–010	Clarion	3/27/95 5/31/95	3/31/05, 70 FR 16423	52.2020(d)(1)(f).
Alcoa Extrusion, Inc	54–0022	Schuylkill	4/19/99	3/31/05, 70 FR 16423	52.2020(d)(1)(f).
Pennsylvania Electric Company	32–000–059	Indiana	12/29/94	3/31/05, 70 FR 16423	52.2020(d)(1)(f).
National Gypsum Company	OP–60–0003	Union	1/17/96	3/31/05, 70 FR 16423	52.2020(d)(1)(f).
Stoney Creek Technologies, LLC	OP–23–0002	Delaware	7/24/03	3/31/05, 70 FR 16423	52.2020(d)(1)(f).
Northeastern Power Company	54–0008	Schuylkill	5/26/95	3/31/05, 70 FR 16423	52.2020(d)(1)(f).
Texas Eastern Transmission Corporation.	22–2010	Dauphin	1/31/97	3/31/05, 70 FR 16423	52.2020(d)(1)(f).
The Miller Group	54–0024	Schuykill	2/1/99	3/31/05, 70 FR 16423	52.2020(d)(1)(f).
CNG Transmission Corporation	32–000–129	Indiana	6/22/95	3/31/05, 70 FR 16423	52.2020(d)(1)(f).
I.H.F.P., Inc	OP–49–0010A	Northumberland	1/7/98	3/31/05, 70 FR 16423	52.2020(d)(1)(f).
National Forge Company	OP–62–032	Warren	5/31/95	3/31/05, 70 FR 16423	52.2020(d)(1)(f).
United Refining Company	OP–62–017	Warren	5/31/95 11/14/96	3/31/05, 70 FR 16423	52.2020(d)(1)(f).
Petrowax Refining	OP–42–110	McKean	3/4/96 5/31/96	3/31/05, 70 FR 16423	52.2020(d)(1)(f).
Westvaco Corporation	07–2008	Blair	9/29/95	3/31/05, 70 FR 16423	52.2020(d)(1)(f).
Naval Surface Warfare Center, Caderock Division Ship Systems Engineering Station.	PA–04108	Philadelphia	10/18/04	4/29/05, 70 FR 22257	52.2020(d)(1)(j).
R.H. Sheppard Co., Inc	67–2016	York	8/4/95	8/24/05, 70 FR 49496	52.2020(d)(1)(i).
Wheatland Tube Company	OP–43–182	Mercer	7/26/95	8/24/05, 70 FR 49496	52.2020(d)(1)(i).
Transcontinental Gas Pipeline Corporation.	OP–53–0006	Potter	10/13/95	8/24/05, 70 FR 49496	52.2020(d)(1)(i).
Transcontinental Gas Pipeline Corporation.	OP–19–0004	Columbia	5/30/95	8/24/05, 70 FR 49496	52.2020(d)(1)(i).
Transcontinental Gas Pipeline Corporation.	PA–41–0005A	Lycoming	8/9/95	8/24/05, 70 FR 49496	52.2020(d)(1)(i).
Molded Fiber Glass	OP–25–035	Erie	7/30/99	11/1/05, 70 FR 65842	52.2020(d)(1)(k).
Erie Forge and Steel, Inc	OP–25–924	Erie	2/10/00	11/1/05, 70 FR 65842	52.2020(d)(1)(k).
OSRAM SYLVANIA Products, Inc	OP–59–0007	Tioga	1/22/98	11/1/05, 70 FR 65842	52.2020(d)(1)(k).
Owens-Brockway Glass Container.	OP–33–002	Jefferson	11/23/98	11/1/05, 70 FR 65842	52.2020(d)(1)(k).

(1) EPA-APPROVED SOURCE-SPECIFIC REASONABLY AVAILABLE CONTROL TECHNOLOGY (RACT) REQUIREMENTS FOR VOLATILE ORGANIC COMPOUNDS (VOC) AND OXIDES OF NITROGEN (NO_X)—Continued

Name of source	Permit No.	County	State effective date	EPA approval date	Additional explanation/ § 52.2063 citation
Texas Eastern Transmission Corporation.	32–000–230	Indiana	9/25/95	11/1/05, 70 FR 65842	52.2020(d)(1)(k).
SKF, USA, Incorporated	67–02010A	York	7/19/00	11/1/05, 70 FR 65842	52.2020(d)(1)(k).
Johnstown America Corporation	11–000–288	Cambria	1/13/99	11/1/05, 70 FR 65842	52.2020(d)(1)(k).
SGL Carbon Corporation	OP–24–131	Elk	5/12/95 5/31/95	11/1/05, 70 FR 65845	52.2020(d)(1)(e).
Salem Tube, Inc	OP–43–142	Mercer	2/16/99	11/1/05, 70 FR 65845	52.2020(d)(1)(e).
Dominion Trans, Inc	18–00006	Clinton	6/15/99 9/29/03	11/1/05, 70 FR 65845	52.2020(d)(1)(e).
Waste Management Disposal Services of Pennsylvania (Pottstown Landfill).	OP–46–0033	Berks; Montgomery.	4/20/99 1/27/04	11/2/05, 70 FR 66261	52.2020(d)(1)(b).
Waste Management Disposal Services of PA, Inc.	67–02047	York	4/20/99	11/2/05, 70 FR 66261	52.2020(d)(1)(b).
Armstrong World Industries, Inc	36–2001	Lancaster	7/3/99	11/2/05, 70 FR 66261	52.2020(d)(1)(b).
Cogentrix of Pennsylvania Inc	OP–33–137, PA–33–302–014, OP–33–302–014, PA 33–399–004, OP 33–399–004	Jefferson	1/27/98 11/15/90 5/31/93 10/31/98 5/31/93	3/8/06, 71 FR 11514	52.2020(d)(1)(l).
Scrubgrass Generating Company, LP.	OP–61–0181	Venango	4/30/98	3/8/06, 71 FR 11514	52.2020(d)(1)(l).
Wheelabrator Frackville Energy Co.	OP–54–005	Schuylkill	9/18/98	3/8/06, 71 FR 11514	52.2020(d)(1)(l).
Indiana University of Pennsylvania—S.W. Jack Cogeneration Facility.	OP–32–000–200	Indiana	9/24/98	3/8/06, 71 FR 11514	52.2020(d)(1)(l).
Fleetwood Motor Homes	OP–49–0011	Northumberland	10/30/98	3/8/06, 71 FR 11514	52.2020(d)(1)(l).
Piney Creek, LP	OP–16–0127	Clarion	12/18/98	3/8/06, 71 FR 11514	52.2020(d)(1)(l).
Statoil Energy Power Paxton, LP	OP–22–02015	Dauphin	6/30/99	3/8/06, 71 FR 11514	52.2020(d)(1)(l).
Harrisburg Steamworks	OP–22–02005	Dauphin	3/23/99	3/8/06, 71 FR 11514	52.2020(d)(1)(l).
Cove Shoe Company	OP–07–02028	Blair	4/7/99	3/8/06, 71 FR 11514	52.2020(d)(1)(l).
PP&L—Fichbach C.T. Facility	OP–54–0011	Schuylkill	6/1/99	3/8/06, 71 FR 11514	52.2020(d)(1)(l).
PP&L—Allentown C.T. Facility	OP–39–0009	Lehigh	6/1/99	3/8/06, 71 FR 11514	52.2020(d)(1)(l).
PP&L—Harwood C.T. Facility	OP–40–0016	Luzerne	6/1/99	3/8/06, 71 FR 11514	52.2020(d)(1)(l).
PP&L—Jenkins C.T. Facility	OP–40–0017	Luzerne	6/1/99	3/8/06, 71 FR 11514	52.2020(d)(1)(l).
The International Metals Reclamation Co.	OP–37–243	Lawrence	8/9/00	3/31/06, 71 FR 16235	52.2020(d)(1)(m).
Petrowax, PA, Inc	PA 61–020	Venango	1/2/96	3/31/06, 71 FR 16235	52.2020(d)(1)(m).
Pennsylvania Electric Company	OP–32–000–059	Indiana	12/29/94	04/28/06, 71 FR 25070	52.2020(d)(1)(n).
The Harrisburg Authority	OP–22–2007	Dauphin	1/02/95	04/28/06, 71 FR 25070	52.2020(d)(1)(n).
Texas Eastern Transmission Corp	OP–50–02001	Perry	4/12/99	04/28/06, 71 FR 25070	52.2020(d)(1)(n).
Graybec Lime, Inc	OP14–0004	Centre	4/16/99	04/28/06, 71 FR 25070	52.2020(d)(1)(n).
Techneglas, Inc	OP–40–0009A	Luzerne	1/29/99	04/28/06, 71 FR 25070	52.2020(d)(1)(n).
DLM Foods (formerly Heinz USA)	CO 211	Allegheny	3/8/96	05/11/06, 71 FR 27394	52.2020(d)(1)(o).
NRG Energy Center (formerly Pittsburgh Thermal Limited Partnership).	CO220	Allegheny	3/4/96	05/11/06, 71 FR 27394	52.2020(d)(1)(o).
Tasty Baking Oxford, Inc	OP–15–0104	Chester	5/12/04	05/11/06, 71 FR 27394	52.2020(d)(1)(o).
Silberline Manufacturing Company.	OP–13–0014	Carbon	4/19/99	05/11/06, 71 FR 27394	52.2020(d)(1)(o).
Adhesives Research, Inc	OP–67–2007	York	7/1/95	05/11/06, 71 FR 27394	52.2020(d)(1)(o).
Mohawk Flush Doors, Inc	OP–49–0001	Northumberland	1/20/99	05/11/06, 71 FR 27394	52.2020(d)(1)(o).
Bigbee Steel and Tank Company	36–2024	Lancaster	7/7/95	6/13/06, 71 FR 34011	52.2020(d)(1)(p).
Conoco Phillips Company	OP–23–0003	Delaware	4/29/04	6/13/06, 71 FR 34011	52.2020(d)(1)(p).
The Hershey Company	22–02004B	Dauphin	12/23/05	6/13/06, 71 FR 34011	52.2020(d)(1)(p).
LORD Corporation, Cambridge Springs.	OP–20–123	Crawford	7/27/95	6/13/06, 71 FR 34011	52.2020(d)(1)(p).
Pittsburgh Corning Corporation	PA–42–009	McKean	5/31/95	6/13/06, 71 FR 34011	52.2020(d)(1)(p).
Small Tube Manufacturing, LLC	07–02010	Blair	2/27/06	6/13/06, 71 FR 34011	52.2020(d)(1)(p).
Texas Eastern Transmission Corporation, Holbrook Compressor Station.	30–000–077	Greene	1/3/97	6/13/06, 71 FR 34011	52.2020(d)(1)(p).
Willamette Industries, Johnsonburgh Mill.	OP–24–009	Elk	5/23/95	6/13/06, 71 FR 34011	52.2020(d)(1)(p).
American Refining Group, Inc	OP–42–004	McKean	11/23/98	6/14/06, 71 FR 34259	52.2020(d)(1)(q).
Bellefonte Lime Company	OP–14–0002	Centre	10/19/98	6/14/06, 71 FR 34259	52.2020(d)(1)(q).
Butter Krust Baking Company, Inc	OP–49–0006	Northumberland	11/5/96	6/14/06, 71 FR 34259	52.2020(d)(1)(q).
Carnegie Natural Gas Company	30–000–106	Greene	9/22/95	6/14/06, 71 FR 34259	52.2020(d)(1)(q).

(1) EPA-APPROVED SOURCE-SPECIFIC REASONABLY AVAILABLE CONTROL TECHNOLOGY (RACT) REQUIREMENTS FOR VOLATILE ORGANIC COMPOUNDS (VOC) AND OXIDES OF NITROGEN (NO_X)—Continued

Name of source	Permit No.	County	State effective date	EPA approval date	Additional explanation/ § 52.2063 citation
Caterpillar, Inc	67–2017	York	8/1/95	6/14/06, 71 FR 34259	52.2020(d)(1)(q).
Gencorp, Inc	54–0009	Schuykill	5/31/96	6/14/06, 71 FR 34259	52.2020(d)(1)(q).
Harris Semiconductor	OP–40–0001A	Luzerne	4/16/99	6/14/06, 71 FR 34259	52.2020(d)(1)(q).
Merisol Antioxidants LLC	OP–61–00011	Venango	4/18/05	6/14/06, 71 FR 34259	52.2020(d)(1)(q).
Norcon Power Partners, L.P	OP–25–923	Erie	9/21/95	6/14/06, 71 FR 34259	52.2020(d)(1)(q).
Triangle Pacific Corp	34–2001	Juniata	5/31/95	6/14/06, 71 FR 34259	52.2020(d)(1)(q).
Viking Energy of Northumberland Limited Partnership.	OP–49–0004	Northumberland	5/30/95	6/14/06, 71 FR 34259	52.2020(d)(1)(q).
White Cap, Inc	40–0004	Luzerne	7/20/95	6/14/06, 71 FR 34259	52.2020(d)(1)(q).
Carlisle Tire & Rubber Company	21–2003	Cumberland	3/10/95	7/11/06, 71 FR 38993	52.2020(d)(1)(t).
The Carbide/Graphite Group, Inc	OP–24–012	Elk	5/12/95	7/11/06, 71 FR 38993	52.2020(d)(1)(t).
Celotex Corporation	OP–49–0013	Northumberland	6/18/99	7/11/06, 71 FR 38993	52.2020(d)(1)(t).
American Railcar Industries, Inc. Shippers Car Line Division.	OP–49–0012	Northumberland	11/29/95	7/11/06, 71 FR 38993	52.2020(d)(1)(t).
ACF Industries, Inc	OP–49–0009	Northumberland	12/12/96	7/11/06, 71 FR 38993	52.2020(d)(1)(t).
New Holland North America, Inc	36–2028	Lancaster	10/17/95	7/11/06, 71 FR 38993	52.2020(d)(1)(t).
Allsteel, Inc	40–001–5	Luzerne	5/26/95	7/11/06, 71 FR 38993	52.2020(d)(1)(t).
Ball-Foster Glass Container Co	OP–42–028	McKean	7/7/95 3/31/99	7/11/06, 71 FR 38993	52.2020(d)(1)(t).
Pennsylvania Power & Light Company—West Shore.	OP–21–2009	Cumberland	6/7/95	7/11/06, 71 FR 38995	52.2020(d)(1)(r).
Foster Wheeler Mt. Carmel, Inc	OP–49–0002	Northumberland	6/30/95	7/11/06, 71 FR 38995	52.2020(d)(1)(r).
Metropolitan Edison Company—Portland.	OP–48–0006	Northampton	12/14/94	7/11/06, 71 FR 38995	52.2020(d)(1)(r).
Pennsylvania Power & Light Company.	OP–41–0004	Lycoming	6/13/95	7/11/06, 71 FR 38995	52.2020(d)(1)(r).
Pennsylvania Power & Light Company.	OP–18–0006	Clinton	6/13/95	7/11/06, 71 FR 38995	52.2020(d)(1)(r).
Texas Eastern Transmission Corporation.	OP–34–2002	Juniata	1/31/97	7/11/06, 71 FR 38995	52.2020(d)(1)(r).
Pennsylvania Power & Light Company.	OP–48–0011	Northampton	12/19/94	7/11/06, 71 FR 38995	52.2020(d)(1)(r).
Johnstown Corporation	OP–11–000–034	Cambria	6/23/95	7/11/06, 71 FR 38995	52.2020(d)(1)(r).
Koppers Industries, Inc	OP–41–0008	Lycoming	3/30/99	7/13/06, 71 FR 39572	52.2020(d)(1)(s).
Armstrong World Industries, Inc	OP–36–2002	Lancaster	10/31/96	6/8/07, 72 FR 31749	52.2020(d)(1)(u).
Peoples Natural Gas Company	OP–16–124	Clarion	8/11/99	6/8/07, 72 FR 31749	52.2020(d)(1)(u).
Dart Container Corporation	OP–36–2015	Lancaster	8/31/95	6/8/07, 72 FR 31749	52.2020(d)(1)(u).
AT&T Microelectronics	OP–39–0001	Lehigh	5/19/95	6/8/07, 72 FR 31749	52.2020(d)(1)(u).
West Penn Power Co	OP–30–000–099	Greene	5/17/99	6/8/07, 72 FR 31749	52.2020(d)(1)(u).
Merck and Co., Inc	OP–49–0007B	Northumberland	5/16/01	3/4/08, 73 FR 11553	52.2020(d)(1)(v).

(2) EPA-APPROVED VOLATILE ORGANIC COMPOUNDS (VOC) EMISSIONS TRADING PROGRAMS

Name of source	Permit No.	County	State effective date	EPA approval date	Additional explanation/ § 52.2063 citation
National Can Company Fres-co Systems, USA Inc. Paramount Packaging Corp.	85–524 85–525	Bucks	3/1/85	4/21/88, 53 FR 13121	(c)(68); transfer of offsets from NCCo to Fresco and Paramount.

(3) EPA-APPROVED SOURCE SPECIFIC SULFUR DIOXIDE (SO_2) REQUIREMENTS

Name of source	Permit No.	County	State effective date	EPA approval date	Additional explanation/ § 52.2063 citation
USX Corporation, Clairton Coke Works.	200	Allegheny	11/17/94	8/18/95, 60 FR 43012	(c)(99).
Reliant Energy Mid-Atlantic Power Holdings LLC, Warren Generating Station.	SO2–62–00012	Warren	11/21/01	1/17/03, 68 FR 2459	(c)(190)(i)(C)(1).
United Refining Company.	SO2–62–017E	Warren	6/11/01	1/17/03, 68 FR 2459	(c)(190)(i)(C)(2).
Trigen-Philadelphia Energy Corporation.	SO2–95–002	Philadelphia	7/27/00	9/9/02, 67 FR 57155	(c)(193)(i)(B)(*1*).

(3) EPA-APPROVED SOURCE SPECIFIC SULFUR DIOXIDE (SO_2) REQUIREMENTS—Continued

Name of source	Permit No.	County	State effective date	EPA approval date	Additional explanation/ § 52.2063 citation
Grays Ferry Cogeneration Partnership.	SO2–95–002A	Philadelphia	7/27/00	9/9/02, 67 FR 57155	(c)(193)(i)(B)(*2*).
PECO Energy Company, Schuylkill Generating Station.	SO2–95–006	Philadelphia	7/27/00	9/9/02, 67 FR 57155	(c)(193)(i)(B)(*3*).
Sunoco, Inc. (R&M) Philadelphia Refinery.	SO2–95–039	Philadelphia	7/27/00	9/9/02, 67 FR 57155	(c)(193)(i)(B)(*4*).

(4) EPA-APPROVED SOURCE SPECIFIC LEADE (PB) REQUIREMENTS

Name of source	Permit No.	County	State effective date	EPA approval date	Additional explanation/ § 52.2063 citation
East Penn Manufacturing Corp.	[None]	Berks	5/29/84	7/27/84, 49 FR 30179	(c)(62).
General Battery Corporation.	[None]	Berks	5/29/84	7/27/84, 49 FR 30179	(c)(62)
Tonolli Corporation (Closed).	[None]	Carbon	5/29/84	7/27/84, 49 FR 30179	(c)(62).
Franklin Smelting and Refining Corporation.	[None]	Philadelphia	9/21/94	12/20/96, 61 FR 67275	(c)(112).
MDC Industries, Inc	[None]	Philadelphia	9/21/94	12/20/96, 61 FR 67275	(c)(112).
Anzon, Inc	[None]	Philadelphia	9/21/94	12/20/96, 61 FR 67275	(c)(112).

(e) *EPA-approved nonregulatory and quasi-regulatory material*

(1) EPA-APPROVED NONREGULATORY AND QUASI-REGULATORY MATERIAL

Name of non-regulatory SIP revision	Applicable geographic area	State submittal date	EPA approval date	Additional explanation
Sulfur Dioxide Attainment Demonstration.	Conewego, Pleasant, and Glade Townships; City of Warren (Warren Co.).	8/20/01	1/17/03, 68 FR 2454	52.2033(b).
Sulfur Dioxide Attainment Demonstration.	Allegheny County—sulfur dioxide area defined in 40 CFR 81.339.	8/15/03	7/21/04, 69 FR 43522	52.2033(c).
Photochemical Assessment Monitoring Stations (PAMS) Program.	Philadelphia-Wilmington-Trenton Ozone Nonattainment Area.	9/23/94	9/11/95, 60 FR 47081	52.2035.
1990 Base Year Emission Inventory—Carbon Monoxide.	Philadelphia County	9/8/95 10/30/95	1/30/96, 61 FR 2982	52.2036(a).
1990 Base Year Emission Inventory—VOC.	Pittsburgh-Beaver Valley Ozone Nonattainment Area.	3/22/96 2/18/97 7/22/98	4/3/01, 66 FR 17634	52.2036(d).
1990 Base Year Emission Inventory—VOC, CO, NO_X.	Reading Area (Berks County)	1/28/97	5/7/97, 62 FR 24846	52.2036(e).
1990 Base Year Emission Inventory—VOC.	Philadelphia-Wilmington-Trenton Ozone Nonattainment Area.	9/12/96	6/9/97, 62 FR 31343	52.2036(i).
1990 Base Year Emission Inventory—NO_X.	Philadelphia-Wilmington-Trenton Ozone Nonattainment Area.	7/31/98	6/17/99, 64 FR 32422	52.2036(l).
1990 Base Year Emission Inventory—NO_X.	Pittsburgh-Beaver Valley Ozone Nonattainment Area.	3/22/96 2/18/97	10/19/01, 66 FR 53094	52.2036(m).
1990 Base Year Emission Inventory—Carbon Monoxide.	City of Pittsburgh-CBD & Oakland.	11/12/92 8/17/01	11/12/02, 67 FR 68521	52.2036(n).
Post 1996 Rate of Progress Plan.	Philadelphia-Wilmington-Trenton Ozone Nonattainment Area.	7/31/98 2/25/00	10/26/01, 66 FR 54143	52.2037(i).
One-Hour Ozone Attainment Demonstration.	Philadelphia-Wilmington-Trenton Ozone Nonattainment Area.	4/30/98 8/21/98 2/25/00 7/19/01	10/26/01, 66 FR 54143	52.2037(j).
Mobile Budgets for Post-1996 and 2005 attainment plans.	Philadelphia-Wilmington-Trenton Ozone Nonattainment Area.	2/25/00	10/26/01, 66 FR 54143	52.2037(k).
		2/23/04	5/21/04, 69 FR 29238	52.2037(k).
15% Rate of Progress Plan	Pittsburgh-Beaver Valley Ozone Nonattainment Area.	3/22/96 2/18/97 7/22/98	4/3/01, 66 FR 17634	52.2038(a).

(1) EPA-APPROVED NONREGULATORY AND QUASI-REGULATORY MATERIAL—Continued

Name of non-regulatory SIP revision	Applicable geographic area	State submittal date	EPA approval date	Additional explanation
15% Rate of Progress Plan	Philadelphia-Wilmington-Trenton Ozone Nonattainment Area.	9/12/96 4/10/97 6/5/98	8/24/01, 66 FR 44547	52.2038(b).
Control of Asphalt Paving Material (Emission offset).	Defined 16-county area in Western PA and Southwestern PA.	5/20/77 7/15/77	10/6/77, 42 FR 54417	52.1120(c)(15), 52.2054.
Particulate matter SIP	Allegheny County—Clairton PM_{10} nonattainment area.	1/6/94	9/8/98, 63 FR 47434	52.2059.
Small Business Assistance Program.	Statewide	2/1/93	1/6/95, 60 FR 1738	52.2060.
Source Testing Manual	Allegheny County	9/10/79	10/21/81, 46 FR 51607	52.2063(c)(4).
Ozone Nonattainment Plan	Statewide	4/24/79	5/20/80, 46 FR 33607	52.2063(c)(22).
Non-regulatory measures	Southwest Pa. AQCR	9/17/79	5/20/80, 46 FR 33607	52.2063(c)(30).
Air Quality Monitoring Network	Statewide (except Allegheny County).	1/25/80	8/5/81, 46 FR 39822	52.2063(c)(34).
Attainment plan for sulfur dioxide.	Armstrong County	4/9/81	8/18/81, 46 FR 43423	52.2063(c)(36).
Air Quality Monitoring Network	Allegheny County	12/24/80	9/15/81, 46 FR 45762	52.2063(c)(38).
Expanded Ridesharing Program	Metro. Philadelphia AQCR	12/9/81	10/7/82, 47 FR 44259	52.2063(c)(46).
Lead (Pb) SIP	Allegheny County	9/6/83	2/6/84, 49 FR 4379	52.2063(c)(59).
Lead (Pb) SIP	Philadelphia	8/29/83 5/15/84	8/1/84, 49 FR 30696	52.2063(c)(61).
Lead (Pb) SIP	Statewide (except Philadelphia and Allegheny Counties).	9/30/82 6/8/84	7/27/84, 49 FR 30179	52.2063(c)(62).
Ozone and Carbon Monoxide Plan.	Metro. Philadelphia AQCR	6/30/82 10/24/83	2/26/85, 45 FR 7772	52.2063(c)(63).
Ozone and Carbon Monoxide Plan.	Southwestern Pa AQCR	6/30/82 10/24/83	2/26/85, 45 FR 7772	52.2063(c)(63).
Ozone and Carbon Monoxide Plan.	Allentown-Bethlehem-Easton Air Basin.	6/30/82 10/24/83	2/26/85, 45 FR 7772	52.2063(c)(63).
Carbon Monoxide Maintenance Plan.	Philadelphia County	9/8/95 10/30/95	1/30/96, 61 FR 2982	52.2063(c)(105).
		9/3/04	04/04/05, 70 FR 16958	Revised Carbon Monoxide Maintenance Plan Base Year Emissions Inventory using MOBILE6.
		3/19/07	10/5/07, 72 FR 56911	Conversion of the Carbon Monoxide Maintenance Plan to a Limited Maintenance Plan Option.
Source Testing Manual	Statewide	11/26/94	7/30/96, 61 FR 39597	52.2063(c)(110)(i)(D); cross-referenced in Section 139.5.
Continuous Source Testing Manual (OFR error).	Statewide (OFR error)	11/26/94	7/30/96, 61 FR 39597	52.2063(c)(110)(i)(D); cross-referenced in Section 139.5.
Ozone Maintenance Plan	Reading Area (Berks County)	1/28/97	5/7/97, 62 FR 24846	52.2063(c)(123).
		12/09/03	2/26/04, 68 FR 8824	52.2063(c)(222).
Ozone Maintenance Plan	Pittsburgh-Beaver Valley Ozone Nonattainment Area.	5/21/01	10/19/01, 66 FR 53094	52.2063(c)(188).
		4/11/03	8/5/03, 68 FR 46099	52.2063(c)(210).
		4/22/04	12/10/04, 69 FR 71212	52.2063(c)(226).
Carbon Monoxide Maintenance Plan.	City of Pittsburgh—CBD & Oakland.	8/17/01	11/12/02, 67 FR 68521	52.2063(c)(189).
PM_{10} Maintenance Plan	Allegheny County—Clairton PM_{10} nonattainment area.	9/14/02	9/11/03, 68 FR 53515	52.2063(c)(215).
Sulfur Dioxide Maintenance Plan	Allegheny County—sulfur dioxide area defined in 40 CFR 81.339.	8/15/03	7/21/04, 69 FR 43522	52.2063(c)(216)(i)(B).
Sulfur Dioxide Maintenance Plan	Conewego, Pleasant, and Glade Townships; City of Warren (Warren Co.).	5/7/04	7/1/04, 69 FR 39860	52.2063(c)(224).
8-Hour Ozone Maintenance Plan and 2002 Base Year Emissions Inventory.	Lancaster Area (Lancaster County).	9/20/06 11/08/06	7/6/07, 72 FR 36889.	
8-Hour Ozone Maintenance Plan and 2002 Base Year Emissions Inventory.	Tioga County	09/28/06 11/14/06	7/6/07, 72 FR 36892.	
8-Hour Ozone Maintenance Plan and 2002 Base Year Emissions Inventory.	Franklin County Area (Franklin County).	9/20/06 11/08/06	7/25/07, 72 FR 40746.	

(1) EPA-APPROVED NONREGULATORY AND QUASI-REGULATORY MATERIAL—Continued

Name of non-regulatory SIP revision	Applicable geographic area	State submittal date	EPA approval date	Additional explanation
8-Hour Ozone Maintenance Plan and 2002 Base Year Emissions Inventory.	Harrisburg-Lebanon-Carlisle, PA: Cumberland County, Dauphin County, Lebanon County, Perry County.	3/27/07	7/25/07, 72 FR 40749.	
8-Hour Ozone Maintenance Plan and 2002 Base Year Emissions Inventory.	Johnstown (Cambria County)	3/27/07	8/1/07, 72 FR 41903	Correction Notice published 3/4/08, 73 FR 11560.
8-Hour Ozone Maintenance Plan and 2002 Base Year Emissions Inventory.	Blair County	2/8/07	8/1/07, 72 FR 41906	
8-Hour Ozone Maintenance Plan and 2002 Base Year Emissions Inventory.	Reading Area (Berks County)	1/25/07	8/24/07, 72 FR 41906	Correction Notice published 1/14/08, 73 FR 2162.
8-Hour Ozone Maintenance Plan and 2002 Base Year Emissions Inventory.	Erie County	4/24/07	10/9/07, 72 FR 57207	Correction Notices published 1/14/08, 73 FR 2162; and 3/4/08, 73 FR 11560.
8-Hour Ozone Maintenance Plan and 2002 Base Year Emissions Inventory.	Mercer County	3/27/07	10/19/07, 72 FR 59213 ..	Correction Notices published 1/14/08, 73 FR 2162; and 3/4/08, 73 FR 11560.
8-Hour Ozone Maintenance Plan and 2002 Base Year Emissions Inventory.	State College (Centre County) ..	6/12/07	11/14/07, 72 FR 63990.	
8-Hour Ozone Maintenance Plan and 2002 Base Year Emissions Inventory.	Scranton-Wilkes-Barre Area: Lackawanna, Luzerne, Monroe and Wyoming Counties.	6/12/07	11/19/07, 72 FR 64948.	
8-Hour Ozone Maintenance Plan and 2002 Base Year Emissions Inventory.	York, PA: Adams County, York County.	6/14/07	1/14/08, 73 FR 2163.	
8-Hour Ozone Maintenance Plan and 2002 Base Year Emissions Inventory.	Allentown-Bethlehem-Easton Area: Carbon, Lehigh and Northampton Counties.	6/26/07 8/9/07	3/4/08, 73 FR 11557	Technical correction dated 8/9/07 addresses omitted emissions inventory information from 6/26/07 submittals.
8-Hour Ozone Maintenance Plan and 2002 Base-Year Inventory.	Wayne County	12/17/07	6/6/08, 73 FR 32238.	
8-Hour Ozone Maintenance Plan and 2002 Base-Year Inventory.	Warren County	12/17/07	6/30/08, 73 FR 36802	
8-Hour Ozone Maintenance Plan and 2002 Base-Year Inventory.	Columbia County	12/17/07	7/2/08, 73 FR 37840.	
8-Hour Ozone Maintenance Plan and 2002 Base-Year Inventory.	Susquehanna County	12/17/07	7/2/08, 73 FR 37841.	
8-Hour Ozone Maintenance Plan and 2002 Base-Year Inventory.	Crawford County	12/17/07	7/2/08, 73 FR 37843.	
8-Hour Ozone Maintenance Plan and 2002 Base-Year Inventory.	Somerset County	12/17/07	7/2/08, 73 FR 37844.	
8-Hour Ozone Maintenance Plan and 2002 Base-Year Inventory.	Snyder County	12/17/07	7/18/08, 73 FR 41271.	
8-Hour Ozone Maintenance Plan and 2002 Base-Year Inventory.	Juniata County	12/17/07	7/18/08, 73 FR 41272.	
8-Hour Ozone Maintenance Plan and 2002 Base-Year Inventory.	Lawrence County	12/17/07	7/18/08, 73 FR 41274.	
8-Hour Ozone Maintenance Plan and 2002 Base-Year Inventory.	Northumberland County	12/17/07	7/18/08, 73 FR 41275.	
8-Hour Ozone Maintenance Plan and 2002 Base-Year Inventory.	Pike County	12/17/07	7/21/08, 73 FR 42263.	
8-Hour Ozone Maintenance Plan and 2002 Base-Year Inventory.	Schuylkill County	12/17/07	8/8/08, 73 FR 46200.	
2002 Base-Year Inventory	Pittsburgh-Beaver Valley Nonattainment Area: Allegheny, Armstrong, Beaver, Butler, Fayette, Washington, and Westmoreland counties.	4/26/07	11/17/08, 73 FR 67776 ..	The SIP effective date is 12/17/08.

* * * * *

[FR Doc. E9–6007 Filed 3–24–09; 8:45 am]

BILLING CODE 6560–50–P

Reader Aids

Federal Register

Vol. 74, No. 56

Wednesday, March 25, 2009

CUSTOMER SERVICE AND INFORMATION

Federal Register/Code of Federal Regulations	
General Information, indexes and other finding aids	**202–741–6000**
Laws	**741–6000**
Presidential Documents	
Executive orders and proclamations	**741–6000**
The United States Government Manual	**741–6000**
Other Services	
Electronic and on-line services (voice)	**741–6020**
Privacy Act Compilation	**741–6064**
Public Laws Update Service (numbers, dates, etc.)	**741–6043**
TTY for the deaf-and-hard-of-hearing	**741–6086**

ELECTRONIC RESEARCH

World Wide Web

Full text of the daily Federal Register, CFR and other publications is located at: **http://www.gpoaccess.gov/nara/index.html**

Federal Register information and research tools, including Public Inspection List, indexes, and links to GPO Access are located at: **http://www.archives.gov/federal__register**

E-mail

FEDREGTOC-L (Federal Register Table of Contents LISTSERV) is an open e-mail service that provides subscribers with a digital form of the Federal Register Table of Contents. The digital form of the Federal Register Table of Contents includes HTML and PDF links to the full text of each document.

To join or leave, go to **http://listserv.access.gpo.gov** and select *Online mailing list archives, FEDREGTOC-L, Join or leave the list (or change settings);* then follow the instructions.

PENS (Public Law Electronic Notification Service) is an e-mail service that notifies subscribers of recently enacted laws.

To subscribe, go to **http://listserv.gsa.gov/archives/publaws-l.html** and select *Join or leave the list (or change settings);* then follow the instructions.

FEDREGTOC-L and **PENS** are mailing lists only. We cannot respond to specific inquiries.

Reference questions. Send questions and comments about the Federal Register system to: **fedreg.info@nara.gov**

The Federal Register staff cannot interpret specific documents or regulations.

Reminders. Effective January 1, 2009, the Reminders, including Rules Going Into Effect and Comments Due Next Week, no longer appear in the Reader Aids section of the Federal Register. This information can be found online at **http://www.regulations.gov.**

CFR Checklist. Effective January 1, 2009, the CFR Checklist no longer appears in the Federal Register. This information can be found online at **http://bookstore.gpo.gov/.**

FEDERAL REGISTER PAGES AND DATE, MARCH

9045–9158 2
9159–9342 3
9343–9564 4
9565–9752 5
4753–9950 6
9951–10164 9
10165–10454 10
10455–10672 11
10673–10810 12
10811–11000 13
11001–11274 16
11275–11460 17
11461–11638 18
11639–11834 19
11835–12050 20
12051–12224 23
12225–12530 24

CFR PARTS AFFECTED DURING MARCH

At the end of each month, the Office of the Federal Register publishes separately a List of CFR Sections Affected (LSA), which lists parts and sections affected by documents published since the revision date of each title.

3 CFR

Proclamations:
8346 9735
8347 9737
8348 9739
8349 9741
8350 9745
8351 9747
8352 11637

Executive Orders:
13435 (revoked by 13505) 10667
13505 10667
13506 11271

Administrative Orders:
Memorandums:
Memorandum of March 3, 2009 9753
Memorandum of March 4, 2009 9755
Memorandum of March 9, 2009 10664
Memorandum of March 9, 2009 10671
Memorandum of March 20, 2009 12531

Presidential Determinations:
No. 2009-16 of March 11, 2009 11461

Notices:
Notice of March 3, 2009 9751
Notice of March 11, 2009 10999

5 CFR

300 9951
630 10165
1201 9343
1210 9343
2411 11639
2417 11639

Proposed Rules:
532 ..... 9967, 9968, 12280

7 CFR

46 11835
400 11643
407 11643
457 11643
636 10673
920 12051
925 11275
930 12053
944 11275
984 ..... 9045, 9344
989 9951
1220 9047
1465 10674
1466 10674
1779 9759
3575 9759
4279 9759
4280 9759
5001 9759

Proposed Rules:
340 10517
980 9969
1005 10842
1007 10842

8 CFR

274a 10455

9 CFR

77 12055
309 11463
317 11837
381 11837

10 CFR

63 10811
430 12058
431 12058
436 10830
440 12535
820 11839

Proposed Rules:
72 9178
170 9130
171 ..... 9130, 12737
431 12000

11 CFR

100 ..... 9565, 10676
104 ..... 9565, 10676
110 ..... 9565, 10676

12 CFR

225 12076
327 ..... 9338, 9525
370 ..... 9522, 12078
740 9347
747 9349

Proposed Rules:
4 10136
21 10130
226 12464
510 10145
563 10139
701 9573

14 CFR

39 ..... 9565, 10166, 10168, 10455, 10457, 10469, 11001, 11003, 11004, 11006, 11009, 11011, 11013, 11014, 12086, 12225, 12228, 12233, 12236, 12238, 12241, 12243, 12245, 12247, 12249, 12252
71 ..... 10676, 11466
73 10171
97 ..... 10471, 10473, 11278, 11467

382 11469
Proposed Rules:
39 ....9050, 9774, 9776, 9971, 10195, 10197, 10199, 10202, 11043, 11505, 12094, 12096, 12098, 12100, 12739
65 10689
71 ....9053, 9973, 9974, 10690, 10691
119 10689
121 10689
135 10689
142 10689
193 11698

15 CFR
744 11472
922 ....12087, 12088
950 11017
Proposed Rules:
922 ....9378, 9574

16 CFR
1500 10475
Proposed Rules:
305 11045
306 9054
320 10843
1115 11883

17 CFR
4 9568
15 12178
16 12178
17 12178
18 12178
19 12178
21 12178
36 12178
40 12178
201 9159
232 10836
239 10836
249 10836
269 10836
274 10836
Proposed Rules:
150 12282

18 CFR
37 12540
40 ....12256, 12544
284 9162
Proposed Rules:
38 12741
40 12749

19 CFR
12 10482
360 11474
Proposed Rules:
10 10849

20 CFR
Proposed Rules:
655 11408

21 CFR
73 10483
101 10483
172 ....11019, 11476
310 9759
314 9765
347 9759
510 9766
520 10483
522 ....9049, 11643
529 ....9766, 10484
Proposed Rules:
1308 10205

23 CFR
771 12518

24 CFR
3500 10172

26 CFR
1 ....9570, 10174, 10175, 11644, 11843, 12551
54 11644
Proposed Rules:
1 ....9575, 9577, 11888
31 11699

29 CFR
2550 11847
4001 11022
4010 11022
4022 11035
4044 ....11022, 11035
Proposed Rules:
403 11700
408 11700
501 11408
780 11408
788 11408
1635 9056
1910 11329

30 CFR
938 12265

31 CFR
Proposed Rules:
103 ....10148, 10158, 10161

32 CFR
199 11279
1702 11478
1703 11480

33 CFR
1 11196
20 11196
70 11196
95 11196
101 11196
110 ....10484, 11196, 11293
117 ....9767, 10486, 10487, 11645, 12551, 12553
141 11196
155 11196
156 11196
160 11196
162 11196
163 11196
164 11196
165 ....9768, 9956, 11196, 12089
334 11481
402 10677
Proposed Rules:
100 ....12287, 12771
117 ....10692, 10850
160 9071
161 9071
164 9071
165 ....9071, 10695, 12102, 12289, 12292
334 11507
401 10698

36 CFR
Proposed Rules:
251 10700
1012 10853

37 CFR
201 12554
258 12092

38 CFR
2 10175
3 ....11481, 11646
20 11037
Proposed Rules:
21 9975

39 CFR
20 11848
3020 ....11293, 11296
Proposed Rules:
3020 12295

40 CFR
52 ....10176, 10488, 11037, 11483, 11647, 11661, 11664, 11671, 11674, 11851, 12556, 12560, 12562, 12567, 12572, 13014
55 9166
60 ....9958, 11858, 12575
63 ....9698, 12575, 12591
81 ....11671, 11674
82 10182
180 ....9351, 9356, 9358, 9365, 9367, 9373, 10489, 10490, 10494, 10498, 10501, 10504, 10507, 10510, 11489, 11494, 11499, 12593, 12596, 12601, 12606, 12613, 12617, 12621
258 11677
261 10680
271 12625
300 ....11862, 12267
745 11863
Proposed Rules:
51 ....11509, 12970
52 ....11049, 11509, 11702, 11888, 12776, 12777, 12778, 12779, 12780
55 ....9180, 11330
63 12784
86 12784
87 12784
89 12784
90 12784
94 12784
98 12784
180 10518
271 12785
300 12296
600 12782
799 11050
1033 12784
1039 12784
1042 12784
1045 12784
1048 12784
1051 12784
1054 12784
1065 12784

41 CFR
102-34 11870
102-72 12272

42 CFR
Proposed Rules:
84 ....9380, 9381

44 CFR
64 ....12628, 12634, 12637
65 ....12640, 12642, 12646, 12648, 12651, 12653, 12655, 12657
67 ....12659, 12665, 12673, 12694, 12721
Proposed Rules:
67 ....12784, 12791, 12794, 12799, 12804, 12807, 12811, 12821, 12823, 12830, 12832

45 CFR
302 ....9171, 11879
303 ....9171, 11879
307 ....9171, 11879
Proposed Rules:
46 9578
88 10207

46 CFR
1 11196
4 11196
5 11196
10 11196
11 11196
12 11196
13 11196
14 11196
15 11196
16 11196
26 11196
28 11196
30 11196
31 11196
35 11196
42 11196
58 11196
61 11196
78 11196
97 11196
98 11196
105 11196
114 11196
115 11196
122 11196
125 11196
131 11196
151 11196
166 11196
169 11196
175 11196
176 11196
185 11196
196 11196
199 11196
315 11502
390 11503
401 11196
402 11196

47 CFR
25 9962
73 ....9171, 10188, 10686, 11299, 12274
301 10686
Proposed Rules:
73 ....9185, 10701, 11051, 11334

48 CFR

Ch. 1 ....11820, 11833
1 11821
3 11832
4 11821
15 11826
17 11821
19 11821
22 11827
25 11828
26 11829
31 11829
47 11832
52 ....11821, 11828, 11829, 11832
509 12731
552 12731

Proposed Rules:

523 11889
552 11889
3009 11512
3052 11512

49 CFR

356 ....9172, 11318
365 ....9172, 11318
374 ....9172, 11318
571 9173
622 12518

Proposed Rules:

240 12105
531 9185
533 9185
571 ....9202, 9478

50 CFR

17 ....10350, 11319
300 11681
622 9770
648 ....9770, 9963, 9964, 10513, 10515, 11327
660 ....9874, 10189, 11880
679 ....9176, 9773, 9964, 9965, 10839, 10840, 10841, 11040, 11041, 11328, 11503, 11504, 11881, 12733, 12734

Proposed Rules:

17 ....9205, 10211, 10412, 10701, 11342, 12297, 12932
20 9207
216 11891
218 11052
223 10857
300 ....9207, 11077
622 11517
648 ....9072, 9208, 11706
665 11518
679 12300

LIST OF PUBLIC LAWS

This is a continuing list of public bills from the current session of Congress which have become Federal laws. It may be used in conjunction with "P L U S" (Public Laws Update Service) on 202–741–6043. This list is also available online at *http://www.archives.gov/federal-register/laws.html*.

The text of laws is not published in the **Federal Register** but may be ordered in "slip law" (individual pamphlet) form from the Superintendent of Documents, U.S. Government Printing Office, Washington, DC 20402 (phone, 202–512–1808). The text will also be made available on the Internet from GPO Access at *http://www.gpoaccess.gov/plaws/index.html*. Some laws may not yet be available.

H.R. 1105/P.L. 111–8

Omnibus Appropriations Act, 2009 (Mar. 11, 2009; 123 Stat. 524)

Last List March 11, 2009

Public Laws Electronic Notification Service (PENS)

PENS is a free electronic mail notification service of newly enacted public laws. To subscribe, go to *http://listserv.gsa.gov/archives/publaws-l.html*

Note: This service is strictly for E-mail notification of new laws. The text of laws is not available through this service. **PENS** cannot respond to specific inquiries sent to this address.