Contents

Federal Register

Vol. 74, No. 11

Friday, January 16, 2009

Agricultural Marketing Service
RULES
Fruit, Vegetable, and Specialty Crops – Import Regulations; Proposed Revision to Reporting Requirements, 2806–2809

Agriculture Department
See Agricultural Marketing Service
See Animal and Plant Health Inspection Service
See Commodity Credit Corporation
See Forest Service
See Natural Resources Conservation Service
See Rural Business–Cooperative Service
See Rural Housing Service
See Rural Utilities Service

Animal and Plant Health Inspection Service
RULES
Revision of the Hawaiian and Territorial Fruits and Vegetables Regulations, 2770–2786
PROPOSED RULES
Importation, Interstate Movement, and Release Into the Environment of Certain Genetically Engineered Organisms, 2907–2909

Army Department
See Engineers Corps

Blind or Severely Disabled, Committee for Purchase From People Who Are
See Committee for Purchase From People Who Are Blind or Severely Disabled

Centers for Disease Control and Prevention
NOTICES
Agency Information Collection Activities; Proposals, Submissions, and Approvals, 3046–3049
Meetings:
Disease, Disability, and Injury Prevention and Control Special Emphasis Panel, 3049–3050
Disease, Disability, and Injury Prevention and Control Special Emphasis Panel; Centers for Agricultural Disease and Injury Research, Education and Prevention, Program Announcement Number, PAR06–057, 3050
Safety and Occupational Health Study Section, National Institute for Occupational Safety and Health, 3050

Centers for Medicare & Medicaid Services
RULES
Medicare Program:
Changes to the Competitive Acquisition of Certain Durable Medical Equipment, Prosthetics, Orthotics and Supplies (DMEPOS), etc., 2873–2881
Medicare Advantage and Prescription Drug Programs MIPPA Drug Formulary & Protected Classes Policies, 2881–2888
PROPOSED RULES
Medicare, Medicaid, and Clinical Laboratory Improvement Amendments of 1988 (CLIA) Program; Cytology Proficiency Testing (PT), 3264–3294
NOTICES
Agency Information Collection Activities; Proposals, Submissions, and Approvals, 3051
Meetings:
Medicare Program; Medicare Evidence Development & Coverage Advisory Committee, 3051–3053

Children and Families Administration
NOTICES
Statement of Mission, Organization, Functions, and Delegations of Authority, 3053–3054

Civil Rights Commission
NOTICES
Meetings:
Arkansas Advisory Committee, 2994
Kansas Advisory Committee, 2994

Coast Guard
RULES
Maritime Identification Credentials, 2865–2866
Pollution Prevention Equipment
Pollution Prevention Equipment, 3364–3393
NOTICES
Imposition of Conditions of Entry for Certain Vessels Arriving to the United States:
Venezuela, 3092–3093

Commerce Department
See National Oceanic and Atmospheric Administration

Committee for Purchase From People Who Are Blind or Severely Disabled
NOTICES
Procurement List; Additions and Deletions, 2993–2994

Commodity Credit Corporation
RULES
Farm and Ranch Lands Protection Program, 2809–2823

Comptroller of the Currency
NOTICES
Agency Information Collection Activities; Proposals, Submissions, and Approvals, 3041–3042

Defense Department
See Engineers Corps
RULES
Defense Acquisition Regulations (DAR) System, 2864
National Security Personnel System, 2757–2770
PROPOSED RULES
Vending Facility Program for the Blind on DoD–Controlled Federal Property, 2932–2935
NOTICES
Agency Information Collection Activities; Proposals, Submissions, and Approvals, 2997
Meetings:
Defense Science Board, 2997–2998
Multi–Agency Radiation Survey and Assessment of Materials and Equipment Manual, 2998–2999
Renewal of Department of Defense Federal Advisory Committees, 2999–3000

Defense
See Defense Department

Department of Transportation
See Pipeline and Hazardous Materials Safety Administration

Education Department
NOTICES
Agency Information Collection Activities; Proposals, Submissions, and Approvals, 3000–3001
Applications:
Carol M. White Physical Education Program; New Awards for Fiscal Year (FY) 2009, 3001–3005
Higher Education Disaster Relief; Applications for New Awards (FY 2009), 3005–3009
Privacy Act; Systems of Records, 3009–3011

Employee Benefits Security Administration
NOTICES
Withdrawal of Notice of Proposed Exemption Involving the Merritts Antiques, Inc. Employees Pension Plan (Plan); Located in Douglasville, PA, 3101

Employment and Training Administration
NOTICES
Renewal of the Advisory Committee on Apprenticeship (ACA) Charter, 3102

Employment Standards Administration
See Wage and Hour Division

Energy Department
See Southwestern Power Administration
See Western Area Power Administration
NOTICES
Meetings:
Environmental Management Site–Specific Advisory Board, Hanford, 3011–3012
Environmental Management Site–Specific Advisory Board, Portsmouth, 3012
Multi–Agency Radiation Survey and Assessment of Materials and Equipment Manual, 2998–2999
Office of Civilian Radioactive Waste Management; National Transportation Plan, Revision 0; Availability, 3012–3013

Engineers Corps
NOTICES
Meetings:
Inland Waterways Users Board, 3000

Environmental Protection Agency
RULES
Pesticide Tolerances:
Emamectin, 2867–2873
PROPOSED RULES
Approval and Promulgation of Implementation Plans:
New Jersey Reasonable Further Progress Plans, Reasonably Available Control Technology, Reasonably Available Control Measures and Conformity Budgets, 2945–2954
Proposed Rule to Implement the 1997 8–Hour Ozone National Ambient Air Quality Standard:
Revision on Subpart 1 Area Reclassification and Anti–Backsliding Provisions Under Former 1–Hour Ozone Standard, etc., 2936–2945
Protection of Stratospheric Ozone:
Allocation of Essential Use Allowances (Calendar Year 2009), 2954–2959
NOTICES
California State Nonroad Engine and Vehicle Pollution Control Standards:
Authorization of Transport Refrigeration Unit Engine Standards, 3030–3033
Environmental Impact Statements; Availability, etc., 3033–3034
Environmental Impacts Statements; Availability:
Filed 01/05/2009 Through 01/09/2009, 3034
Multi–Agency Radiation Survey and Assessment of Materials and Equipment Manual, 2998–2999

Federal Aviation Administration
PROPOSED RULES
Proposed Amendments of Class E Airspace:
Natchitoches, LA, 2909–2910
NOTICES
Meetings:
Seventh Meeting, Special Committee 211, Nickel–Cadmium, Lead Acid and Rechargeable Lithium Batteries, 3128
Petition for Exemption; Summary of Petition Received, 3128–3129
Petitions for Exemption; Summaries of Petitions Received, 3129

Federal Communications Commission
NOTICES
Agency Information Collection Activities; Proposals, Submissions, and Approvals, 3034–3036
Consumer Advisory Committee; Re–chartering and Appointment of Members, 3036–3037
Hearing Designation Order:
Herring Broadcasting, Inc. d/b/a WealthTV, Complainant v. Time Warner Cable Inc., Defendant, et al., 3037–3041

Federal Deposit Insurance Corporation
NOTICES
Agency Information Collection Activities; Proposals, Submissions, and Approvals, 3041–3042

Federal Election Commission
NOTICES
Meetings; Sunshine Act, 3042–3043

Federal Highway Administration
NOTICES
Tiered Environmental Impact Statement:
Sandoval County and Bernalillo County, NM, 3129–3130

Federal Motor Carrier Safety Administration
RULES
Elimination of Route Designation Requirement for Motor Carriers Transporting Passengers over Regular Routes, 2895–2902
NOTICES
Commercial Driver's License Standards:
Application for Exemption; Volvo Trucks North America (Volvo), 3130–3131

Federal Reserve System
NOTICES
Agency Information Collection Activities; Proposals, Submissions, and Approvals, 3041–3042

Federal Retirement Thrift Investment Board
NOTICES
Privacy Act; Systems of Records, 3043–3044

Federal Trade Commission
NOTICES
Consent Orders:
Shiva Venture Group, Inc. dba INNOVA Financial Group, 3044–3045

Federal Transit Administration
NOTICES
Establishment of Emergency Relief Docket for Calendar Year 2009, 3131–3132

Fish and Wildlife Service
NOTICES
Endangered and Threatened Species:
Recovery Plan for the Northwest Atlantic Population of the Loggerhead Sea Turtle, 2995

Food and Drug Administration
RULES
Requirements for Submission of Bioequivalence Data, 2849–2862
NOTICES
Draft Guidance for Industry on Standards for Securing the Drug Supply Chain:
Standardized Numerical Identification for Prescription Drug Packages, 3054–3055
Draft Guidance for Industry:
Current Good Tissue Practice (CGTP) and Additional Requirements for Manufacturers of Human Cells, Tissues, and Cellular and Tissue–Based Products, 3055–3056
Submission of Laboratory Packages by Accredited Laboratories, 3056–3057
Guidance for Industry on Regulation of Genetically Engineered Animals Containing Heritable recombinant DNA Constructs; Availability, 3057–3058
Guidance for Industry on Voluntary Third–Party Certification Programs for Foods and Feeds; Availability, 3058–3059
Guidance for Industry:
Evidence–Based Review System for the Scientific Evaluation of Health Claims, 3059–3060
Significant Scientific Agreement in the Review of Health Claims for Conventional Foods and Dietary Supplements; Withdrawal of Guidance, 3060
Release of Task Force Report; Guidance for Industry and FDA:
Interim Evidence–Based Ranking System for Scientific Data; Withdrawal of Guidance, 3060–3061

Forest Service
NOTICES
Environmental Impact Statements; Availability, etc.:
White River National Forest, Eagle/Holy Cross Ranger District, Eagle County, CO; Edwards Inholding Easement Proposal, 2991–2992
Meetings:
National Urban and Community Forestry Advisory Council, 2992–2993
Opal Creek Scenic Recreation Area Advisory Council, 2993

General Services Administration
NOTICES
Agency Information Collection Activities; Proposals, Submissions, and Approvals, 3045–3046

Geological Survey
NOTICES
Meetings:
National Geospatial Advisory Committee, 3096

Health and Human Services Department
See Centers for Disease Control and Prevention
See Centers for Medicare & Medicaid Services
See Children and Families Administration
See Food and Drug Administration
See Health Resources and Services Administration
See National Institutes of Health
RULES
Health Insurance Reform; Modifications to the Health Insurance Portability and Accountability Act (HIPAA) Electronic Transaction Standards, 3296–3328
HIPAA Administrative Simplification: Modifications to Medical Data Code Set Standards to Adopt ICD–10–CM and ICD–10–PCS, 3328–3362
Office of Global Health Affairs:
Regulation on the Organizational Integrity of Entities That Are Implementing Programs and Activities Under the Leadership Act; Correction, 2888–2889
NOTICES
Meetings:
National Vaccine Advisory Committee Vaccine Safety Working Group, 3046

Health Resources and Services Administration
NOTICES
Agency Information Collection Activities; Proposals, Submissions, and Approvals, 3061–3062

Homeland Security Department
See Coast Guard
See U.S. Customs and Border Protection
RULES
Changes to Requirements Affecting H–2B Nonimmigrants and Their Employers; Correction, 2837
Documents Acceptable for Employment Eligibility Verification; Correction, 2838
Establishment of a Genealogy Program; Correcting Amendment, 2824
United States Visitor and Immigrant Status Indicator Technology Program (US–VISIT); Enrollment of Additional Aliens in US–VISIT:
Authority to Collect Biometric Data from Additional Travelers and Expansion to the 50 Most Highly Trafficked Land Border Ports of Entry; Correction, 2837–2838
PROPOSED RULES
Privacy Act of 1974:
Department of Homeland Security – 025 Law Enforcement Authority in Support of the Protection of Property Owned or Occupied by the Department of Homeland Security, 2903–2904
Privacy Act of 1974: Department of Homeland Security – 023 Personnel Security Management., 2904–2906
Privacy Act of 1974: Department of Homeland Security – 024 Facility and Perimeter Access Control and Visitor Management, 2906–2907
NOTICES
Environmental Impact Statement; Availability:
National Bio and Agro–Defense Facility, 3065–3080

Meetings:
DHS Data Privacy and Integrity Advisory Committee, 3080
Privacy Act; Systems of Records, 3080–3088

Housing and Urban Development Department
NOTICES
Agency Information Collection Activities; Proposals, Submissions, and Approvals, 3093
Federal Property Suitable as Facilities to Assist the Homeless, 3093–3094
Mortgage and Loan Insurance Programs Under the National Housing Act – Debenture Interest Rates, 3094–3095

HSB
See U.S. Customs and Border Protection

Interior Department
See Fish and Wildlife Service
See Geological Survey
See Land Management Bureau
See National Park Service

Internal Revenue Service
PROPOSED RULES
Highway Use Tax; Sold Vehicles and Electronic Filing, 2910–2913

International Trade Commission
RULES
Revised Procedures and Requests for Information During Adequacy Phase, 2847–2849

Justice Department
See Prisons Bureau

Labor Department
See Employee Benefits Security Administration
See Employment and Training Administration
See Mine Safety and Health Administration
See Wage and Hour Division

Land Management Bureau
NOTICES
Alaska Native Claims Selection, 3096
Environmental Impact Statements; Availability, etc.:
Proposed Red Cliff Coal Mine and Associated Surface Facilities, etc.; Garfield and Mesa Counties, CO, 3096–3098
Proposed Withdrawal Extension and Opportunity for Public Meeting; Montana, 3098–3099
Public Land Order:
Extension of Public Land Order No. 6706, Alaska, 3099
Realty Action:
Proposed Sale of Public Land, Idaho, 3099–3101

Maritime Administration
NOTICES
Meetings:
Atlantic Sea Island Group LLC, Safe Harbor Energy Liquefied Natural Gas Deepwater Port License Application; Location Change, 3132

Mine Safety and Health Administration
PROPOSED RULES
Coal Mine Dust Personal Monitors, 2915–2931

National Aeronautics and Space Administration
NOTICES
Agency Information Collection Activities; Proposals, Submissions, and Approvals, 3102–3103

National Highway Traffic Safety Administration
NOTICES
Federal Motor Vehicle Motor Theft Prevention Standard; Exemption Petitions:
General Motors Corp., 3132–3134
Reports, Forms, and Recordkeeping Requirements, 3134–3135

National Institutes of Health
NOTICES
Meetings:
Center for Scientific Review, 3062–3065
National Library of Medicine, 3065

National Oceanic and Atmospheric Administration
RULES
Channel Islands National Marine Sanctuary Regulations, 3216–3262
Fisheries of the Exclusive Economic Zone Off Alaska:
Pacific Cod by Non–American Fisheries Act Crab Vessels Catching Pacific Cod for Processing by the Inshore Component in the Central Regulatory Area of the Gulf of Alaska, 2902
Magnuson–Stevens Act Provisions: Annual Catch Limits; National Standard Guidelines, 3178–3213
PROPOSED RULES
Fisheries of the Exclusive Economic Zone Off Alaska:
Groundfish Fisheries of the Bering Sea and Aleutian Islands Management Area and Gulf of Alaska, Seabird Avoidance Requirements Revisions, etc., 2984–2990
Fisheries of the Northeastern United States:
Northeast Multispecies Fishery; Secretarial Interim Action, 2959–2984
NOTICES
Endangered and Threatened Species:
Recovery Plan for the Northwest Atlantic Population of the Loggerhead Sea Turtle, 2995
Incidental Takes of Marine Mammals During Specified Activities; Marine Geophysical Survey in Southeast Asia (March–July 2009), 2995–2996
Meetings:
National Marine Fisheries Service, 2996
North Pacific Fishery Management Council, 2996–2997

National Park Service
NOTICES
Environmental Impact Statements; Availability, etc.:
Jefferson National Expansion Memorial, MO, 3101

Natural Resources Conservation Service
RULES
Technical Service Provider Assistance, 2800–2806
Wildlife Habitat Incentive Program, 2786–2800

Nuclear Regulatory Commission
NOTICES
Confirmatory Order:
Tennessee Valley Authority; Sequoyah Nuclear Plant, 3103–3104
Final Memorandum of Understanding Between the U.S. Nuclear Regulatory Commission and the State of California, 3107–3108

Final Memorandum of Understanding Between the U.S. Nuclear Regulatory Commission and the State of Missouri, 3108–3110
Final Memorandum of Understanding Between the U.S. Nuclear Regulatory Commission and the Virginia Department of Health, 3105–3106
License Amendment and Opportunity to Request a Hearing: Areva, NP, Inc.; Richland WA, etc., 3110–3114
Multi–Agency Radiation Survey and Assessment of Materials and Equipment Manual, 2998–2999

Pension Benefit Guaranty Corporation
RULES
Benefits Payable in Terminated Single–Employer Plans: Interest Assumptions for Valuing and Paying Benefits, 2863–2864

Personnel Management Office
RULES
National Security Personnel System, 2757–2770
NOTICES
Meetings:
Federal Prevailing Rate Advisory Committee, 3114–3115

Pipeline and Hazardous Materials Safety Administration
RULES
Pipeline Safety:
Administrative Procedures, Address Updates, and Technical Amendments, 2889–2895

Postal Service
RULES
New Automation Requirements for Detached Addressed Labels, 2866–2867

Prisons Bureau
PROPOSED RULES
Religious Beliefs and Practices:
Chapel Library Materials, 2913–2915

Public Health Service
See Centers for Disease Control and Prevention
See Food and Drug Administration
See Health Resources and Services Administration
See National Institutes of Health

Railroad Retirement Board
NOTICES
Agency Information Collection Activities; Proposals, Submissions, and Approvals, 3115–3116

Rural Business–Cooperative Service
RULES
Rural Development Guaranteed Loans, 2823–2824

Rural Housing Service
RULES
Rural Development Guaranteed Loans, 2823–2824

Rural Utilities Service
RULES
Rural Development Guaranteed Loans, 2823–2824

Securities and Exchange Commission
See Securities and Exchange Commission
RULES
Indexed Annuities and Certain Other Insurance Contracts, 3138–3176
NOTICES
Agency Information Collection Activities; Proposals, Submissions, and Approvals, 3116
Filings:
Joint Industry Plan; National Market System Plan for the Selection and Reservation of Securities Symbols, etc., 3117
Self–Regulatory Organizations; Proposed Rule Changes:
New York Stock Exchange LLC, 3117–3123
NYSE Alternext US LLC, 3123–3125

Social Security Administration
NOTICES
Privacy Act of 1974, as Amended; Computer Matching Program, 3125–3126

Southwestern Power Administration
NOTICES
Integrated System Rate Schedules, 3013–3015

State Department
NOTICES
Agency Information Collection Activities; Proposals, Submissions, and Approvals, 3126
Nonproliferation Sanctions, 3126–3127

Surface Transportation Board
NOTICES
Corporate Family Transaction Exemption:
Nicholas B. Temple, Eric Temple, Columbia Basin Railroad Co., Inc, Central Washington Railroad Co. and Portland Vancouver Junction Railroad, LLC, 3135–3136

Transportation Department
See Federal Aviation Administration
See Federal Highway Administration
See Federal Motor Carrier Safety Administration
See Federal Transit Administration
See Maritime Administration
See National Highway Traffic Safety Administration
See Pipeline and Hazardous Materials Safety Administration
See Surface Transportation Board
NOTICES
Applications for Certificates of Public Convenience and Necessity and Foreign Air Carrier Permits Filed Under Subpart B (Formerly Subpart Q), 3127–3128

Treasury Department
See Comptroller of the Currency
See Internal Revenue Service
See United States Mint
RULES
Import Restrictions Imposed on Certain Archeological Material from China, 2838–2844
Prohibitions and Conditions for Importation of Burmese and Non–Burmese Covered Articles of Jadeite, Rubies, etc., 2844–2847

U.S. Customs and Border Protection
RULES
Establishing U.S. Ports of Entry in the Commonwealth of the Northern Mariana Islands (CNMI) and Implementing the Guam–CNMI Visa Waiver Program, 2824–2836
Import Restrictions Imposed on Certain Archeological Material from China, 2838–2844

Prohibitions and Conditions for Importation of Burmese and Non–Burmese Covered Articles of Jadeite, Rubies, etc., 2844–2847

United States Mint

NOTICES

Meetings:
Citizens Coinage Advisory Committee January 2009, 3136

Veterans Affairs Department

NOTICES

Meetings:
Advisory Committee on Disability Compensation, 3136

Wage and Hour Division

RULES

Agency Information Collection Activities; Proposals, Submissions, and Approvals, 2862–2863
Protecting the Privacy of Workers:
Labor Standards Provisions Applicable to Contracts Covering Federally Financed and Assisted Construction; Effectiveness of Information Collection Requirements, 2862

Western Area Power Administration

NOTICES

Loveland Area Projects – Rate Order No. WAPA–142, 3015–3022
Pick–Sloan Missouri Basin Program—Eastern Division–Rate Order No. WAPA–140, 3022–3030

Separate Parts In This Issue

Part II

Securities and Exchange Commission, Securities and Exchange Commission, 3138–3176

Part III

Commerce Department, National Oceanic and Atmospheric Administration, 3178–3213

Part IV

Commerce Department, National Oceanic and Atmospheric Administration, 3216–3262

Part V

Health and Human Services Department, Centers for Medicare & Medicaid Services, 3264–3294

Part VI

Health and Human Services Department, 3296–3362

Part VII

Homeland Security Department, Coast Guard, 3364–3393

Reader Aids

Consult the Reader Aids section at the end of this page for phone numbers, online resources, finding aids, reminders, and notice of recently enacted public laws.

To subscribe to the Federal Register Table of Contents LISTSERV electronic mailing list, go to http://listserv.access.gpo.gov and select Online mailing list archives, FEDREGTOC-L, Join or leave the list (or change settings); then follow the instructions.

Rules and Regulations

Federal Register
Vol. 74, No. 11
Friday, January 16, 2009

This section of the FEDERAL REGISTER contains regulatory documents having general applicability and legal effect, most of which are keyed to and codified in the Code of Federal Regulations, which is published under 50 titles pursuant to 44 U.S.C. 1510.

The Code of Federal Regulations is sold by the Superintendent of Documents. Prices of new books are listed in the first FEDERAL REGISTER issue of each week.

DEPARTMENT OF DEFENSE

OFFICE OF PERSONNEL MANAGEMENT

5 CFR Part 9901

RIN 3206–AL75

National Security Personnel System

AGENCY: Department of Defense; Office of Personnel Management.

ACTION: Final rule.

SUMMARY: The Department of Defense (DoD) and the Office of Personnel Management (OPM) are issuing the final regulations adding subpart E, Staffing and Employment, to the National Security Personnel System (NSPS) regulations published in the **Federal Register** on September 26, 2008. NSPS is a human resources management system for DoD, authorized by the National Defense Authorization Act for Fiscal Year 2004, amended by the National Defense Authorization Act for Fiscal Year 2008 and the Duncan Hunter National Defense Authorization Act for Fiscal Year 2009. These final regulations govern staffing and employment under NSPS.

DATES: This rule is effective March 17, 2009.

FOR FURTHER INFORMATION CONTACT: For DoD, Bradley B. Bunn, (703) 696–5604; for OPM, Charles D. Grimes III, (202) 606–8079.

SUPPLEMENTARY INFORMATION: On December 3, 2008, the Department of Defense (DoD or ''the Department'') and the Office of Personnel Management (OPM) published in the **Federal Register** at 73 FR 73606 a proposal to add staffing and employment provisions to the National Security Personnel System (NSPS or ''the System''), a human resources (HR) management system for DoD under 5 U.S.C. 9902, as enacted by section 1101 of the National Defense Authorization Act for Fiscal Year 2004 (Pub. L. 108–136, November 24, 2003), and amended by section 1106 of the National Defense Authorization Act for Fiscal Year 2008 (Pub. L. 110–181, January 28, 2008), and by section 1106 of the Duncan Hunter National Defense Authorization Act for Fiscal Year 2009 (Pub. L. 110–417, October 14, 2008).

I. Staffing and Employment—5 CFR 9901 Subpart E

This subpart provides DoD with authority, pursuant to 5 U.S.C. 9902(i), to waive or modify certain provisions of title 5 U.S.C. and CFR pertaining to methods for recruitment for, and appointments to, NSPS positions and the methods for the assignment, reassignment, detail, transfer, and promotion of employees into and within NSPS. This subpart revises the subpart E found in the NSPS regulations published November 1, 2005 at 70 FR 66116. The revisions reflect changes in NSPS authorized by amendments to 5 U.S.C. 9902 by the National Defense Authorization Act for Fiscal Year 2008 (Pub. L. 110–181) as further amended by the Duncan Hunter National Defense Authorization Act for Fiscal Year 2009 (Pub. L. 110–417); provide specificity to the regulations based on existing implementation; reflect changes in subparts A through D of the regulations published on September 26, 2008; and make technical changes and improvements.

In order to meet its critical mission requirements worldwide and respond to a dynamic national security environment, the Department needs flexibility to attract, recruit, assign and retain a high quality workforce. The current Federal hiring system does not have the flexibility needed by DOD to meet all of its mission requirements. Subpart E of the final regulations preserves merit principles and veterans' preference requirements, while streamlining hiring and placement processes and providing DoD with flexible hiring tools to respond effectively to continuing mission changes and priorities and evolving labor markets. The public comment period ended on January 2, 2009. The following is a discussion of the comments received.

II. Response to Public Comments

A. Summary

The proposed rule was published in the **Federal Register** on December 3, 2008. In response to the proposed rule, the Department received 42 submissions during the 30-day public comment period. General comments fell into one of the following categories: collective bargaining and labor relations; publication date; fairness and equity; and whether the subpart implements too many or too few changes to staffing and employment procedures. Comments specific to staffing and employment fell into one of the following categories: Coverage of regulations; appointing authorities; probationary periods; competitive examining procedures; and internal placement. The 42 submissions included a total of 94 comments; 60 of those comments pertain to this subpart and are addressed below. We do not address the remaining comments because they concern other NSPS subparts published in 73 FR 56344, or do not relate to staffing and employment.

B. General Comments

1. Collective Bargaining and Labor Relations

Labor organizations contended that various matters should be subject to collective bargaining under 5 U.S.C. chapter 71. As noted in the publication of the final regulations for subparts A through D of this part, published on September 26, 2008, collective bargaining obligations are governed by Federal statute. DoD is committed to fulfilling its obligation to bargain in good faith consistent with governmentwide labor relations law under 5 U.S.C. chapter 71 and the requirements of 5 U.S.C. 9902, as well as section 1106(b) of Public Law 110–181 and section 1106 of Public Law 110–417. However, the Department seeks uniformity and consistency in its NSPS employment practices through issuance of regulations.

2. Publication Date

One commenter questioned the timing of our proposed regulations, stating that we should allow the new Administration to review NSPS before implementing this rule. A labor organization expressed concern that these regulations were published on

December 3rd, requiring anyone interested in commenting to use time during the holidays to do so. The proposed regulations, which add subpart E to subparts A through D of the final enabling regulations published on September 26, 2008, are authorized by both the National Defense Authorization Act (NDAA) for Fiscal Year 2008 and the Duncan Hunter National Defense Authorization Act for Fiscal Year 2009, which clarified the staffing and employment authorities originally granted under 5 U.S.C. 9902 by Public Law 108–136. When Congress enacted NDAA 2008 in January 2008, OPM and DoD began developing these regulations, which was eleven months prior to their December 3, 2008 publication. However, Congress did not enact NDAA 2009 until October 14, 2008. The Department and OPM issued the proposed subpart E regulations less than two months after the NDAA 2009 became law. They were issued at that time to provide a complete regulatory structure for NSPS that reflects the most recent changes in law.

3. Fairness and Equity

Many commenters expressed concerns about the fairness and equity of the staffing and employment features of NSPS. These concerns were characterized by terms such as ''favoritism'' and ''cronyism'' implying that the greater flexibility in decision-making under NSPS would result in hiring or placement decisions on a basis other than merit.

A number of the fairness comments centered around the NSPS competitive examining flexibilities. For example, some commenters expressed concern regarding management's ability to limit the area of consideration, when sufficient qualified applicants are available, to applicants in the local commuting area and other targeted recruitment sources, stating that these restrictions limit advancement opportunities for qualified candidates and prevent applicants who are willing to relocate from being considered for NSPS positions. They feared that management would use this flexibility to narrow the field of applicants to their favorites in order to select their ''employee of choice.'' Two commenters pointed out that it will now be easier than ever for military leaders to hire and promote retiring military members who would otherwise face unemployment at the expense of faithful, loyal, honest, and deserving civilians. Another commenter stated that limiting the pool of qualified applicants does not make sense if the department intends to hire the most qualified candidate for the position. In response, we note that NSPS competitive examining procedures require acceptance of applications from all U.S. citizens, including current Federal employees. However, if there is a sufficient number of qualified applicants, initial consideration may be limited to candidates in the local commuting area and other targeted recruitment sources. In instances where the ease of filing an application or supply and demand forces generate a sufficient number of candidates, the ability to narrow the pool of applicants to be considered is necessary to streamline hiring processes. Streamlining hiring practices enables management to quickly fill positions and help ensure that the highest quality candidates are not lost to other employers due to length of time between the close of a job announcement and the job offer. This flexibility neither favors nor disfavors military members since all qualified applicants, whether civilian or military, in the local commuting area must be considered. Likewise, both civilian and military outside the local commuting area would equally be excluded from consideration. While organizations may limit the initial area of consideration, there is no requirement to do so. Apparent in many of the comments is the belief that the ability to narrow the area of consideration to the local commuting area would enable management to target ''favorite'' employees or friends or ''cronies.'' However, the regulations provide a safeguard against misuse of the smaller area of initial consideration. Specifically, the regulations require that, if sufficient qualified applications are not received from the local commuting area and other targeted recruitment sources, the area of consideration must be expanded to include all applicants for the vacancy. DoD will continue to comply with merit system principles and veterans' preference when filling NSPS positions through NSPS competitive examining procedures.

A number of fairness-related comments revolved around the alternative promotion procedures, an NSPS internal placement flexibility. Commenters stated that these procedures will narrow promotion and career advancement opportunities for NSPS employees and that their use will result in a supervisor's favorite employee or crony being selected, ensuring that the Federal Government will turn into a ''who you know club'' that does not consider diversity or qualifications in the selection process. One commenter observed that absent a formal vacancy announcement, management would not be able to ensure that all employees are made aware of the opportunity for consideration. In other words, nothing would prevent management from singling out one or two favorite employees for consideration. With respect to consideration of qualifications in the selection process, under the alternative promotion procedures, the regulations require that employees selected meet qualification standards and either fall into the category of highly qualified or have received the highest level of performance rating for NSPS. While the regulations do not require formal advertisement (*e.g.*, posting a job on USAJOBS), § 9901.516(c)(8) does require that employees be notified prior to use of alternative promotion procedures. Some methods that may be used include newsletters, bulletin boards, e-mail, and other forms of employee notification. Also, using alternative promotion procedures may not require employees to apply for positions. For example, the exceptional performance promotion procedure requires that all employees in the area of consideration be considered when their Level 5 rating of record is based on performance in the same occupational series and similar function as the vacancy being filled. Assessment boards may entail soliciting job experience information from employees in an organization or may simply be held in conjunction with or after the conclusion of the performance appraisal period.

Another commenter expressed the belief that the alternative promotion procedures are not competitive and/or do not comply with merit system principles. They are consistent with merit system principles and with the merit promotion requirements of 5 CFR part 335. In fact, procedures similar to the alternative promotion procedures are currently used by some DoD Components to fill non-NSPS positions. We have included each of these procedures in the regulations because not all of these flexibilities are currently authorized for use within each DoD Component. Including them under the NSPS Merit Promotion Program provides NSPS managers uniform and consistent access to these flexibilities. In addition to notifying all employees that these forms of competition may be used, each of these procedures requires analysis of the job to be filled to identify the knowledge, skills, abilities, and/or competencies necessary to successfully perform the duties of the position;

clearance of applicable programs for displaced or surplus employees, such as the DoD Priority Placement Program and the Reemployment Priority List; determination that selectees meet applicable OPM or DoD qualification standards for the positions being filled; and, selection of candidates determined to be best qualified for the positions. The identification, qualification, evaluation, and selection of candidates must be made without regard to political, religious, or labor organization affiliation or nonaffiliation, marital status, race, color, sex, national origin, nonqualifying physical handicap, or age, and must be based solely on job-related criteria. These alternative promotion procedures streamline the standard vacancy announcement process. Streamlining the process permits management to fill positions quickly by identifying and selecting highly qualified candidates in a timely manner.

Some commenters raised concerns about the exceptional performance promotion procedure which permits management to promote an employee whose most recent rating of record is Level 5 to a vacant position in the same occupational series (or related interdisciplinary/interoccupational series) and similar function as the position the employee held at the time he or she received the Level 5 rating. Commenters who objected to this procedure indicated they consider the NSPS pay pool process to be faulty. Commenters stated that the NSPS performance system is ''far too subjective'' and employees who perform at the Level 4 or Level 5 will never be considered for the exceptional performance promotion because ratings are forced down in a quota-like manner to Level 3. Another commenter suggested that using a severely flawed performance system's appraisals as a tool for selection undermines EEO and merit system principles.

As described in 5 CFR part 9901, subparts C and D, the pay pool process employs a number of checks and balances to ensure that employees who perform similar categories of work are measured consistently and that multiple levels of review occur. In addition, should a written justification not support a recommended rating of record, the Pay Pool Panel must afford the rating official an opportunity to provide further justification for the recommendation prior to adjusting the rating. This mechanism reinforces equity across and within pay pools and is a necessary safeguard when rewarding performance from a shared pay pool. Because supervisors may interpret performance criteria differently, pay pools reconcile ratings to ensure the criteria are applied consistently throughout a pay pool in order to provide equity and fairness of ratings. Further, NSPS regulations strictly prohibit a forced distribution of ratings. NSPS performance criteria also make clearer distinctions in levels of performance, assess employee performance more rigorously, and set a higher bar for higher-level performance, ensuring that only the most highly performing employees achieve a Level 5 rating of record. Consequently, the NSPS performance management criteria often result in a different rating distribution than found under other performance management systems. It is precisely because of the rigor of the NSPS performance rating process and criteria that there is equity in NSPS performance ratings and distinctions in levels of performance. This rigor and these thoughtfully crafted performance criteria result in a small, distinguished group of high performers rated at the Level 5 NSPS rating level. As a result, a selectee from this pool of candidates has a record of proven performance, as demonstrated by award of the highest rating possible. Such an employee has demonstrated, through day-to-day performance that he or she possesses the applicable knowledge, skills, abilities and/or competencies to perform the duties of the vacant position in an exemplary manner.

In addition to the reconciliation process that takes place within the pay pool, NSPS has implemented numerous rules to guard against arbitrary performance rating decisions, enabling employees to challenge or seek review of key decisions and setting up accountability mechanisms to ensure that employees are treated fairly.

Use of the exceptional performance promotion procedure is not required; however, should management choose to utilize this procedure, the mechanisms and safeguards built into the NSPS performance appraisal and evaluation process ensure that only the highest performing employees receive a Level 5 rating.

Another commenter suggested that promoting employees based on only ''one good rating regardless of experience'' is not responsible and that promotions should award those with a ''proven track record of exceptional performance.'' While only those with an exceptional performance rating can be considered through this procedure, selections are made based on factors in addition to the rating, such as experience, education, training, knowledge, skills, abilities, competencies and other appropriate information consistent with merit system principles.

4. Sufficient/Insufficient Change

Some commenters objected to waiving and/or modifying the various provisions of title 5, stating that current hiring flexibilities were sufficient. They also stated that the Department has not demonstrated why changes are needed in the staffing and employment areas or how these proposals would result in a less cumbersome or fairer hiring process. Another commenter suggested that our proposals do not provide enough hiring flexibilities. Yet another commenter applauded the streamlining of the direct hire authority approval process. The enabling legislation (5 U.S.C. 9902(i)) permits the Department to waive or modify specified sections of title 5 U.S.C. and CFR, essential to the development and implementation of a flexible system for hiring and assigning employees. NSPS staffing and employment flexibilities were designed and developed through a formal and rigorous process in coordination with OPM. The flexibilities strike a balance between enhancing the Department's ability to accomplish its many missions and preserving compliance with essential important civil service protections such as merit system principles and veterans' preference requirements. When a position is filled through the competitive examining process, we have provided the ability to limit the area of consideration to candidates in the local commuting area and other targeted recruitment sources in cases where sufficient qualified candidates are available. The regulations also provide the capability to convert non-permanent employees to permanent appointments in the competitive service provided certain requirements are met; provide flexibility for longer periods of temporary, term, and time-limited appointments; and provide alternative promotion procedures for internal placement actions. We are cognizant of the requirement to fully inform and train supervisors, managers, and human resources personnel regarding the various NSPS flexibilities so that they will be understood and used to the fullest advantage. We believe the identified flexibilities are sufficient at this time. However, if after a period of operation and evaluation of the benefits provided by the new flexibilities, we determine that other enhancements would be beneficial, we will explore additional regulatory authorities for hiring and assigning employees to meet critical national security missions.

C. Specific Comments

1. Coverage

A commenter noted that the proposed rule indicates that the regulations will apply to all DoD employees determined by the Secretary to be covered under § 9901.102(b). However, the commenter points out that the section speaks specifically to coverage determinations for subparts B through D of the NSPS regulations issued in 73 FR 56344 and recommends that § 9901.503 be amended to specifically address subpart E. We agree with this recommendation and have modified the regulations to reflect this change.

2. Appointing Authorities

Competitive and excepted appointing authorities. Section 9901.511 authorizes the Secretary to continue using excepted and competitive appointing authorities under 5 U.S.C. chapter 33, Governmentwide regulations, Executive orders, and other statutes. Individuals hired under these authorities will be designated as career, career conditional, term, temporary, or time-limited employees, as appropriate.

A commenter asked if the provision for Schedule A hiring of the disabled is still in place. Yes; under NSPS, activities may continue to use the Schedule A hiring authority to appoint persons with disabilities to NSPS positions.

Several commenters requested clarification on the inclusion of career conditional appointments in NSPS. Previously, Public Law 108–136 permitted NSPS to establish its own workforce shaping rules. These rules did not make distinctions in tenure between permanent employees for the purpose of employee retention. Consequently, there was no need for a career conditional tenure at that time. However, Public Law 110–181 requires NSPS reductions in force (RIF) to comply with the Governmentwide regulations appearing at 5 CFR part 351. Under those regulations, the assignment of a specific tenure group is directly related to an employee's retention standing and it is necessary to have appointment types (career conditional and career) that align with the Governmentwide tenure group definitions to apply RIF procedures.

A commenter disagreed with the definition of *career employee*. Specifically, the commenter stated that the rule appears to take an employee who is currently ''a career employee'' after completing a 1-year probationary period and increase the requirement to 3 years. Under the current NSPS rules, an employee who receives a permanent appointment is immediately considered a career employee and does not serve any ''conditional'' period. The initial probationary period requirement is a separate requirement. Under this final rule, a ''career employee'' is defined as ''an individual appointed without time limit to a competitive service position in NSPS who has served 3 years of substantially continuous service as described in 5 CFR 315.201(b).'' This definition requires that an employee's initial permanent appointment to an NSPS position in the competitive service be a conditional appointment and upon completion of the 3-year conditional period he or she be designated as career, unless the employee has previously completed a 3-year conditional service period in accordance with 5 CFR 315.201(b). Any NSPS employee on a career appointment in the competitive service who has not completed 3 years of substantially continuous service at the time these regulations become effective must be converted to a conditional appointment until the 3-year requirement is met. Time already served under an NSPS career appointment counts toward completion of the conditional period. No change was made to the regulations based on this comment.

Another commenter asked if NSPS employees who are career employees will be grandfathered in and remain career employees. It depends. On the effective date of the final regulations, NSPS employees on career appointments in the competitive service who do not meet the § 9901.504 or 5 CFR part 315 definition of career employee will be converted to a career conditional appointment. Time already served as a career employee under NSPS, as well as creditable time under 5 CFR 315.201, will count toward completion of the 3-year career conditional period. NSPS employees who meet the above-mentioned definitions will remain career employees.

Several commenters stated that it is unclear whether or not both career and career conditional appointments in NSPS have the same stature as those types of appointments in non-NSPS positions throughout the Federal Government, i.e., whether a former NSPS appointee would have reinstatement eligibility under 5 CFR 315.401. Yes, both career and career conditional employees within NSPS have the same ''stature'' as non-NSPS career or career conditional employees and a former NSPS appointee would have reinstatement eligibility under 5 CFR 315.401. Another commenter questioned whether NSPS service is creditable toward career tenure in a non-NSPS position under 5 CFR 315.201(b)(1)(i) through (xix). Yes, service under career and career conditional appointments in NSPS competitive service positions is creditable in the same manner and to the same extent as service under the same type of appointments in non-NSPS positions. To minimize confusion regarding the creditability of NSPS service under career and career conditional appointments, additional guidance will be provided in implementing issuances.

A labor organization representative suggested that OPM should review the regulations in light of a recent court decision concerning veterans' preference. We have not revised the regulations in response to this comment. After further review of the regulatory text, we conclude that these regulations fully comply with applicable veterans' preference requirements.

Severe shortage/critical need hiring authority (direct hire authority). This section authorizes the Secretary to determine when a severe shortage or critical hiring need exists. A labor organization representative expressed concern that the Secretary, rather than OPM, has the authority to authorize direct hire authority for positions determined to have a severe shortage of qualified applicants or where there is a critical need. The representative stated that OPM should not abandon its role as a monitor of agency actions to ensure that merit principles are not violated and that no prohibited personnel practices take place, asserting that letting DoD develop its own appointing authorities runs the risk of creating opportunities for inequities, discrimination, and abuse and threatens the credibility of the system for employees. By design, and in keeping with the statutory objective of establishing a flexible system, these regulations give DoD considerable authority within the regulatory framework to design staffing and employment features. When the Secretary determines a severe shortage or critical hiring need exists, it is done using the same criteria that OPM uses under 5 CFR part 337. Also, OPM continues to have a role in overseeing the civil service system and in advising the President on civil service matters, including matters covered by these regulations. We believe the coordination and approval roles as defined in § 9901.105 allow OPM sufficient opportunity to fulfill its responsibilities. Requiring OPM approval for every action would undermine the intent to

create a flexible system, especially when the action is in response to a time-sensitive national security matter or critical need, which DoD is in the best position to assess. As a result, we have not revised the language in this section in response to these comments.

Non-permanent appointing authorities. This section authorizes the Secretary to make temporary and term appointments to NSPS positions in the competitive service and temporary and time-limited appointments to NSPS positions in the excepted service. It prescribes extended timeframes for such appointments and provides a mechanism for the noncompetitive conversion of certain nonpermanent employees to career conditional or career appointments in the competitive service, provided specific requirements are met. A labor organization representative objected to the extended timeframe for term appointments in the competitive service and asserted that some of the situations the regulations state as reasons for term appointments more appropriately justify a permanent appointment. The commenter stated that there is no good justification for extending the timeframe of term appointments for a longer period than Governmentwide regulations allow and that the primary justification for doing so seems to be to bring these employees on board through term appointment procedures and then convert them to competitive non-term appointments. We have not revised the regulations in response to these comments. Extended timeframes for term appointments provide a valuable tool to the Department for accomplishing its many mission requirements of a time-limited nature. Extended time limits for such appointments are essential in an organization driven by knowledge-based and other skills requirements that are difficult to attract and retain on a temporary basis. We also recognize that situations and/or work that are initially time-limited in nature may, in fact, evolve into permanent work. The ability to convert term employees to permanent appointments minimizes disruption while permitting the Department to retain a valued employee who has, in fact, gone through a competitive process and met additional requirements prior to conversion to a permanent position. For example, the first condition for conversion to a permanent appointment is that the employee be selected for the non-permanent appointment under NSPS competitive examining procedures from a vacancy announcement that includes information to all applicants about the possibility of noncompetitive conversion. Further, the employee must have completed at least 2 years of continuous service at Level 3 (Valued Performer) or better and be converted to a career conditional or career position in the same pay schedule and band for which initially hired.

3. Probationary Periods

Section 9901.512 describes requirements for serving and successfully completing probationary periods upon appointment to an NSPS position in the competitive or excepted service or upon initial appointment to a supervisory position.

A labor organization representative expressed concern that the regulations could be read as requiring no less than 1 year. Section 9901.512(a)(3) clearly identifies the length of the probationary periods and does not intend the time period of 1 year to be interpreted as a minimum time period as feared by the commenter. Another commenter expressed concern that removing the ability of a supervisor to appeal being removed while on probation ''assures that all supervisors will learn to be yes-men.'' This assertion has no basis. The NDAA for 2008 brought NSPS under certain Governmentwide rules, including the right of employees to appeal an adverse action such as removal from Federal employment. Additionally, § 9901.512(b)(2)(i) retains the same protection afforded under General Schedule that an employee who does not satisfactorily complete a probationary period is entitled to be assigned to a position at a grade or pay band and pay no lower than that held before assignment to the supervisory position. This protection coupled with the ability to remove the employee from the supervisory position balances the organization's need to ensure the capability of supervisory personnel while providing safeguards to the employee who fails his or her supervisory position. No change has been made to the regulations based on these comments.

A commenter questioned the provisions at §§ 9901.512(a)(4) and 9901.512(b)(1)(iii), which require that time spent in a non-pay status in excess of one workday during the probationary period (both initial and supervisory) extend the probationary period by an equal amount of time. These provisions are intended to allow management the full period to observe an employee's on-the-job performance and enable a manager to remove the employee without undue restriction. However, we have reviewed this provision in light of the requirements of 5 U.S.C. chapter 75 (which provides appeal rights to competitive service employees and preference eligible excepted service employees after 1 year and excepted service employees other than preference eligibles after 2 years) and have determined that this provision does not result in the intended goal. Therefore, we have revised the regulations to reflect an allowable absence in a non-pay status consistent with the provisions for non-NSPS employees covered under 5 CFR part 315, subpart H.

A labor organization representative suggested that the regulations clarify under § 9901.512(a)(4)(ii) that if an employee is successful on appeal in overturning a separation for performance or conduct, all time served in the initial probationary period must be restored and credited toward completion of the probationary period. Insofar as a separation is overturned, it ceases to exist. Therefore, the regulations provide sufficient clarity on this point. No change was made to the regulations based on this comment.

A commenter requested clarification regarding the length of the probationary period for preference eligibles with appeal rights. The commenter also suggested adding information to the regulations to address the limited appeal rights of Veterans' Recruitment Appointment appointees terminated during the initial probationary period. We agree and have modified the regulations accordingly.

A commenter questioned whether completion of a supervisory probationary period in a different Federal position would be creditable for an NSPS position. The regulations have been modified to state that the prior completion of the supervisory probationary period under these circumstances is creditable.

A commenter noted that the regulations require a supervisory probationary period and questioned whether a probationary period is required for an employee appointed to a managerial position. No change was made to the regulations based on this comment. NSPS does not require a managerial probationary period, since not all managerial positions have responsibility over subordinate positions. Consequently, a managerial position that is not titled and coded as supervisory is not subject to a probationary period.

4. Competitive Examining Procedures

Section 9901.515 provides DoD the authority to use competitive examining procedures to appoint applicants to career, career conditional, term, and

temporary appointments in the competitive service and provides that the Secretary will issue uniform policies, procedures, and guidance concerning competitive examining for NSPS positions. This section also discusses public notice requirements and the use of numerical rating and ranking procedures and alternative ranking and selection procedures (category rating). It retains OPM's authority to grant or deny a pass-over request of a preference eligible with a compensable service-connected disability of 30 percent or more as well as to make medical qualifications determinations pertaining to preference eligibles.

Under NSPS, DoD must accept applications from all U.S. citizens, including current Federal employees, for positions announced using competitive examining procedures. If sufficient qualified applicants are available, applicants from the local commuting area and other targeted recruitment sources may be considered first. A commenter recommended that we define what ''sufficient'' qualified candidates means and that we include a requirement for the agency to publicly disclose the total number of applications considered versus the total number of applications received. We disagree that the term needs further definition. The term is relative. Sufficiency depends on the specifics of each recruitment action, including the number of vacancies, the labor market and the type and level of position to be filled. These various factors all contribute to ensuring that there are a multiple number of quality choices from which to select. In response to the comment that we include a requirement to publicly disclose the number of applications considered versus the total number received, we note that Governmentwide rules do not require a similar disclosure, and we see no useful purpose served by this request. However, this information is available in the case file generated for each selection and is subject to internal review and audit as well as review by OPM.

A commenter noted that, under the numerical rating and ranking procedures (one of the methods for determining which applicants will be referred to the selecting official), the ''rule of 3'' should apply. We disagree. Under NSPS, DoD has waived chapter 33 of title 5 of the U.S.C., which among other things, mandates the rule of three. By waiving this statutory provision, DoD is able to broaden the pool of candidates from which to select and provide flexibility to acquire a workforce tailored to its needs. No change was made based on this comment.

5. Internal Placement

Section 9901.516 prescribes procedures regarding the assignment, reassignment, reinstatement, detail, transfer, and promotion of individuals or employees into or within NSPS. This section addresses level of work determinations for determining when an action is competitive or noncompetitive; contains information related to detailing NSPS employees; and describes the NSPS Merit Promotion Program, including competitive actions and exceptions to competition, alternative promotion procedures, grievances, and maintaining records for each promotion to a competitive service position filled through internal competitive procedures.

A labor organization representative observed that the definitions in § 9901.103 of ''reassignment'' and ''reduction in band'' are brief and do not contain enough detail to enable managers to make level of work determinations or to determine whether an action will be competitive or noncompetitive. The definitions the representative refers to appear in the NSPS regulations published on September 26, 2008. These definitions, while brief, are quite specific. A *reassignment* is described as a move to a different position or set of duties in the same or comparable pay band, and a *reduction in band* is described as a move from one pay band to a lower pay band while continuously employed. The definitions also describe when *reassignment* and *reduction in band* are appropriate for moves from positions outside of NSPS to a NSPS position. The definitions are further supplemented by definitions for *comparable pay band* or *level of work and lower pay band or level of work*. These additional definitions clarify that *reassignment* and *reduction in band* are based on level of work determinations inherent in the NSPS classification structure. The relationship of pay bands in the NSPS classification architecture and information on level of work determinations for moves from non NSPS positions to NSPS is described in the NSPS Classification and Qualification implementing issuances. Consequently, no change was made to the regulations based on this comment.

A labor organization representative stated that the NSPS definition of ''promotion'' is more concrete than the definitions of ''reduction in band'' and ''reassignment.'' The representative observed that, with pay bands, promotions are less frequent than they are under the GS system, meaning that far more mobility will take place as movement within a band. The representative expressed concern that movements within a pay band, or ''reassignments,'' may involve an increase in base pay normally reserved for promotions under the GS system and that managers will be able to decide when to give a pay increase or whether to subject a movement to competition. They were particularly concerned that employees could be reassigned with pay increases and other employees would be given no notice or opportunity to compete.

The definitions of *reassignment* and *promotion* differ among different personnel systems. NSPS is designed to be a modern, contemporary, flexible, and agile human resources management system intended to help DoD meet the national security challenges of the 21st century, while following core merit system principles and protections. The NSPS pay band recognizes a broader range of work than a General Schedule grade within a single pay band also known as one discrete level of work. Classification architectures utilizing a *grade* concept describe narrower ranges of work for a single discrete level of work. Consequently, where movements in a graded system would result in *promotion* pay, the same movement in a pay-banded system may constitute a *reassignment*. While pay progression in grade-based systems is primarily based on promotions, pay progression in the NSPS pay-banded system is primarily based on performance and secondarily on promotion movements. In appropriate situations, as documented and authorized by Component procedures, management may provide a discretionary base salary increase to provide an incentive to employees to broaden skill sets, take on more responsibilities, accept assignments that require relocation, etc. To preserve the competitive procedures for promotion, such increases are limited to an amount less than the minimum percentage increase permitted by promotion rules. Providing an increase in pay for a reassignment is not required and, where provided, may be predicated on specific case information (*e.g.*, the employee's salary in range, what skills the employee brings to the position). At the same time, the pay band structure recognizes that employees may be promoted to a position in a higher pay band containing a higher level of work. Consistent with merit promotion rules, promotion to a position in a higher pay band, or at a higher level of work, in the

competitive service requires competition.

With respect to the comment regarding managers deciding when reassignments will require competition or not, or when a notice of the vacancy will be given, we note that, as with the GS system, many NSPS positions to which employees are reassigned are advertised; however, some are not. As under the GS system, some reassignments are done competitively to increase the applicant base. Some reassignments are also done competitively if the position to which the employee will be reassigned ultimately leads to a position in a higher full performance pay band (*i.e.*, a higher level of work under the NSPS classification architecture). Whether a position is advertised or not, employees who are reassigned must be qualified for the position, unless they are reassigned as a result of reduction in force procedures and qualification requirements are waived. No change was made to these regulations based on this comment.

A labor organization representative expressed concern that details could ''go on forever'' without documentation and that ''a manager could pick a favorite employee for a desirable detail with no record of the action,'' making it ''difficult if not impossible to track movement of employees in order to ensure that there is no prohibited discrimination.'' In addition, the labor organization representative asked specifically about what documentation was required for a GS employee's detail to an NSPS position.

Consistent with Governmentwide regulations, NSPS does not impose a specific timeframe that limits flexibility in accomplishing work. A detail, however, is limited in that it involves the temporary assignment of an employee to another position or set of duties to perform work on a time-limited basis with the expectation that the employee will return to the permanent position of record upon expiration of the detail. NSPS does require documentation of some details, in that details to higher pay bands beyond 180 days are subject to competition. Management must evaluate the situation and determine the appropriate assignment of employees. In some cases, it may be better to temporarily promote an employee or fill a position on a permanent basis.

The OPM Guide to Processing Personnel Actions provides technical guidance regarding when documentation is required for a GS employee's detail. Documentation is not dependent on whether the employee is detailed to a different personnel system but on the duties assigned, the organization or agency to which assigned, length of the detail, and the grade of the position. Additional guidance regarding the conditions surrounding a detail requiring documentation is in chapter 14 of the Guide.

A commenter asked for clarification of the exception to competition situation described at § 9901.516(e)(7), which permits a noncompetitive promotion to a higher pay band previously held on a permanent or term basis in the competitive service. The commenter asked that we make clear that holding a position on a term basis means on a term appointment, not a temporary promotion or temporary appointment. The commenter also suggested we state when the term appointment was held and for how long, to ensure consistency. Alternatively, the commenter suggested the regulations provide discretionary authority to Components to specify the conditions under which a term appointment could be used as the basis for a noncompetitive permanent action. Finally, the commenter noted that, during base realignment and closure and transformation efforts, term appointments and temporary promotions for extended periods are common and expressed concern that this provision seems to give an advantage to term applicants over permanent employees who have held a position in a higher pay band on a temporary basis for several years. We agree that this provision may be confusing and have deleted the words ''or term'' from this paragraph.

A labor organization representative expressed concern that the alternative promotion procedures bypassed competitive processes and merit principles creating ''secret processes'' to fill vacancies. Several commenters associated a formal vacancy announcement with competition, transparency and merit selection. The NSPS regulations on internal placement explicitly align with Governmentwide regulations by adopting the merit promotion requirements under 5 CFR 335.103(b). These merit promotion requirements provide the foundation for a systemic means of selection according to merit. They include analysis of the job to be filled to identify the knowledge, skills, abilities, and/or competencies necessary to successfully perform the duties of the position; clearance of applicable programs for displaced or surplus employees, such as the DoD Priority Placement Program and the Reemployment Priority List; determination that the selectees meet applicable OPM or DoD qualification standards for the positions being filled; and, selection of candidates determined to be best qualified for the positions. Additionally, the identification, qualification, evaluation, and selection of candidates must be made without regard to political, religious, or labor organization affiliation or nonaffiliation, marital status, race, color, sex, national origin, nonqualifying physical handicap, or age, and must be based solely on job-related criteria. Employees selected under alternative promotion procedures have been judged on the recognized merit factors of qualifications and performance. Although formal advertisement is not required for selections under these procedures, the regulations require that employees are notified in advance of the intent to use these procedures.

A labor organization representative asked how absent employees or those not physically present might receive consideration for positions through these alternative means. The absence of an employee does not preclude consideration under these procedures precisely because these procedures do not necessarily require an application from the employee. For example, all employees eligible and within the area of consideration will automatically receive consideration through the exceptional performance promotion procedure. Each Component will determine specific processes for each procedure, and should a Component request applications for any of these alternative methods, they will also explain the provision and conditions for considering those who are absent. However, we have amended § 9901.516(e)(8) to clarify that when alternative promotion procedures are used, appropriate consideration must be given to employees within the area of consideration who are absent for legitimate reasons, (*e.g.*, on detail, on leave, at training courses, in the military service, etc.).

A labor organization representative asked specific questions regarding the execution of these alternative promotion procedures, including whether employees would be informed when specific jobs became available, whether employees would be informed of their ratings, whether employees could challenge their ratings, how employees would be informed of enough information to file a grievance if desired, and whether the rating outcomes would be available for potential grievance or EEO procedures. The goal of the alternative promotion procedures is to provide an efficient procedure for filling positions

competitively. While we have provided the framework and requirements for each alternative promotion procedure, Components will establish specific guidelines for their use of each alternative promotion procedure to be consistent with their merit promotion plans. It is important to emphasize that employing alternative promotion procedures does not negate merit promotion requirements. For example, like all other competitive procedures, case files will be kept for each position filled through these alternative procedures and will be made available for grievance and EEO purposes. In addition, Components will continue to provide necessary information to employees.

A labor organization representative asked for clarification regarding who determines if the by-name request is ranked within the highest quality group. The competitive process requires measuring the candidate against the job-related criteria. If the candidate meets the rating factors required for the highest level, the candidate may be selected for the position. The human resources office determines whether a candidate is ranked within the highest quality group.

Another commenter stated that the alternative promotion procedures may be used as a means of circumventing veterans' preference, particularly the hiring of disabled veterans. The application of veterans' preference is a requirement when conducting competitive examining, not in internal placement. The NSPS alternative promotion procedures are only used to place employees internally within the Department. NSPS upholds veterans' preference in the competitive examining process. We have not revised the regulations in response to this comment.

A labor organization representative questioned why the requirement to maintain internal placement files was based solely on the time frame of the grievance process and stated that this allowed ''premature destruction'' of records without considering the EEO process. The language regarding how long to maintain documents mirrors the language as it exists today for General Schedule employees in 5 CFR 335.103(b)(5). Governmentwide experience to date has not indicated a need for extending the time period for retention of these records. NSPS does not change the procedures currently in place with respect to meeting EEO or veterans' preference requirements. We have not changed the regulations in regard to these comments.

III. Next Steps

The National Defense Authorization Act for Fiscal Year 2008 requires that this rule be considered a major rule for the purpose of section 801 of title 5, United States Code. Consequently, before it can take effect, the Department will submit to each House of the Congress and to the Comptroller General a report containing the rule, a general statement relating to the rule, and the proposed effective date of the rule. The rule may not be effective until the date occurring 60 days after the later of (1) Congressional receipt of the report, or (2) the date the rule is published in the **Federal Register**. This rule is subject to the procedures set forth in 5 U.S.C. 801–808.

E.O. 12866, Regulatory Review

DoD and OPM have determined that this action is a significant regulatory action within the meaning of Executive Order 12866 because there is significant public interest in the National Security Personnel System. DoD and OPM have analyzed the expected costs and benefits of the revised HR system, and that analysis was presented in the supplementary information published with the rule on September 26, 2008 (Volume 73 Number 188) on page 56389.

The primary benefit to the public of NSPS resides in the HR flexibilities that will enable DoD to attract, build, and retain a high-performing workforce focused on effective and efficient mission accomplishment. Staffing and employment regulations that streamline hiring processes provide additional hiring flexibilities which will result in a more qualified and proficient workforce and will generate a greater return on investment in terms of productivity and effectiveness. Taken as a whole, the changes included in these regulations will improve upon the original NSPS regulations and result in a contemporary, merit-based HR system that focuses on performance, generates respect and trust, and supports the primary mission of DoD.

This rule has been reviewed by the Office of Management and Budget in accordance with E.O. 12866.

Regulatory Flexibility Act

DoD and OPM have determined that these regulations will not have a significant economic impact on a substantial number of small entities because they will apply only to Federal agencies and employees.

Paperwork Reduction Act of 1995 (44 U.S.C. Chapter 35)

This final regulatory action will not impose any additional reporting or recordkeeping requirements under the Paperwork Reduction Act.

E.O. 12988, Civil Justice Reform

These regulations are consistent with the requirements of E.O. 12988. The regulations clearly specify the effects on existing Federal law or regulation; provides clear legal standards; has no retroactive effects; specifies procedures for administrative and court actions; defines key terms; and is drafted clearly.

E.O. 13132, Federalism

DoD and OPM have determined these regulations will not have Federalism implications because they will apply only to Federal agencies and employees. The regulations will not have financial or other effects on States, the relationship between the Federal Government and the States, or the distribution of power and responsibilities among the various levels of government.

Unfunded Mandates

These regulations will not result in the expenditure by State, local, or tribal governments of more than $100 million annually. Thus, no written assessment of unfunded mandates is required.

List of Subjects in 5 CFR Part 9901

Administrative practice and procedure, Employment, Government employees, Labor-management relations, Labor unions, Reporting and recordkeeping requirements, Wages.

Office of Personnel Management.

Michael W. Hager,

Acting Director, Office of Personnel Management.

Department of Defense.

Gordon England,

Deputy Secretary of Defense.

■ Accordingly, under the authority of section 9902 of title 5, United States Code, the Department of Defense and the Office of Personnel Management are adding subpart E, part 9901, of title 5, Code of Federal Regulations, to read as follows:

PART 9901—DEPARTMENT OF DEFENSE NATIONAL SECURITY PERSONNEL SYSTEM (NSPS)

Subpart E—Staffing and Employment

General

Sec.

9901.501 Purpose.
9901.502 Scope of authority.

9901.503 Coverage.
9901.504 Definitions.

External Recruitment and Internal Placement

9901.511 Appointing authorities.
9901.512 Probationary periods.
9901.513 [Reserved]
9901.514 Non-citizen hiring.
9901.515 Competitive examining procedures.
9901.516 Internal placement.

Authority: 5 U.S.C. 9902.

Subpart E—Staffing and Employment

General

§ 9901.501 Purpose.

(a) This subpart sets forth policies and procedures for the recruitment for, and appointment to, positions; and assignment, reassignment, detail, transfer, or promotion of employees, consistent with 5 U.S.C. 9902(a) and (i).

(b) The Secretary will comply with merit principles set forth in 5 U.S.C. 2301 and with 5 U.S.C. 2302 (dealing with prohibited personnel practices).

(c) The Secretary will adhere to veterans' preference principles set forth in 5 U.S.C. 2302(b)(11), consistent with 5 U.S.C. 9902(i).

§ 9901.502 Scope of authority.

When a specified category of employees, applicants, and positions is covered by the system established under this subpart, the provisions of 5 U.S.C. 3301, 3302, 3304, 3317(a), 3318 and 3319 (except with respect to veterans' preference), 3321 (except 3321(a)(2)), 3324, 3325, 3327, 3330, and 3341 are modified or waived and replaced with respect to that category except as otherwise specified in this subpart. In accordance with § 9901.101, the Secretary may prescribe implementing issuances to carry out the provisions of this subpart.

§ 9901.503 Coverage.

(a) At his or her sole and exclusive discretion, the Secretary may decide to apply this subpart to a specific category or categories of eligible civilian employees in organizations and functional units of the Department at any time in accordance with the provisions of 5 U.S.C. 9902. However, no category of employee may be covered by this subpart unless that category is also covered by subpart D of this part.

(b) The following employees and positions in DoD organizational and functional units are eligible for coverage under this subpart:

(1) Employees and positions who would otherwise be covered by 5 U.S.C. chapter 33 (excluding members of the Senior Executive Service); and

(2) Such others designated by the Secretary as authorized under 5 U.S.C. 9902.

§ 9901.504 Definitions.

In this subpart—

Career conditional employee means an individual appointed without time limit to a competitive service position in NSPS who does not meet the definition of a career employee.

Career employee means an individual appointed without time limit to a competitive service position in NSPS who has served 3 years of substantially continuous service as described in 5 CFR 315.201(b).

Competencies has the meaning given that term in § 9901.103.

Detail means the temporary assignment, other than temporary reassignment or temporary promotion, of an employee to another position or set of duties with the expectation that the employee will return to the permanent position of record upon expiration of the assignment. For pay and benefits purposes and for the purpose of part 351 of this title, an employee continues to encumber the position from which the employee was detailed.

Initial probationary period means the initial period of service immediately following an employee's appointment to the competitive or excepted service, as specified in § 9901.512, during which an authorized management official determines whether the employee fulfills the requirements of the position to which assigned.

Local commuting area is the geographic area that usually constitutes one area for employment purposes. It includes any population center (or two or more neighboring ones) and the surrounding localities in which people live and can reasonably be expected to travel back and forth daily to their usual place of employment.

Promotion has the meaning given that term in § 9901.103.

Reassignment has the meaning given that term in § 9901.103. For the purpose of part 351 of this title, an official position does not include a position to which an employee is reassigned on a temporary or time-limited basis.

Reduction in band has the meaning given that term in § 9901.103.

Supervisory probationary period means the first year of service immediately following an employee's initial appointment or placement in a supervisory position, as provided in 5 U.S.C. 3321(a)(2), during which an authorized management official determines whether the employee fulfills the requirements of the position to which assigned.

Temporary employee means an individual in the competitive or excepted service who is employed for a limited period of time not to exceed 1 year. The individual's appointment may be extended, up to a maximum established under § 9901.511(d), to perform the work of a position that does not require an additional permanent employee.

Term employee means an individual in the competitive service who is employed for a period of more than 1 year up to a maximum established under § 9901.511(d).

Time-limited employee means an individual in the excepted service who is employed for a period of more than 1 year up to a maximum established under § 9901.511(d).

External Recruitment and Internal Placement

§ 9901.511 Appointing authorities.

(a) *Competitive and excepted appointing authorities.* The Secretary may continue to use excepted and competitive appointing authorities under chapter 33 of title 5, U.S. Code, Governmentwide regulations, or Executive orders, as well as other statutes, and those individuals appointed under these authorities will be given career, career conditional, term or temporary appointments in the competitive service or permanent, time-limited, or temporary appointments in the excepted service, as appropriate. The competitive appointing authorities under this paragraph are subject to the procedures in part 330 of this title, except for 5 CFR 330.208 and 330.501.

(b) *Additional appointing authorities.* (1) The Secretary and the Director may enter into written agreements providing for new excepted and competitive appointing authorities for positions covered by the National Security Personnel System, including noncompetitive appointments, and excepted appointments that may lead to a subsequent noncompetitive appointment to the competitive service.

(2) DoD and OPM will jointly publish a notice, and request comments, in the **Federal Register** when establishing a new competitive appointing authority or a new excepted appointing authority that may lead to a subsequent noncompetitive appointment to a competitive service position.

(3) The Secretary will prescribe appropriate implementing issuances to administer a new appointing authority established under paragraph (b) of this section.

(4) At least annually, a consolidated list of all appointing authorities established under this section and currently in effect will be published in the **Federal Register**.

(c) *Severe shortage/critical need hiring authority.* (1) The Secretary will determine when a severe shortage of candidates or a critical hiring need exists, as defined in 5 CFR part 337, subpart B, for particular occupations, pay bands, career groups, and/or geographic locations. The Secretary may decide that such a shortage or critical need exists, or may make this decision in response to a written request from the head of a DoD Component. These authorities may be used without regard to competitive examination requirements described in § 9901.515. Public notice will be provided in accordance with 5 U.S.C. 3304(a)(3)(A).

(2) For each specific authority, the Secretary will document the basis for the severe shortage or critical hiring need, consistent with 5 CFR 337.204(b) or 337.205(b), as applicable.

(3) The Secretary may extend a direct hire authority if the Secretary determines there is or will continue to be a severe shortage of candidates or a critical hiring need for a particular position(s) as of the date the authority is due to expire.

(4) The Secretary will terminate or modify a specific authority to make appointments under this section when it is determined that the severe shortage or critical need upon which the authority was based no longer exists.

(5) The Secretary will notify OPM of determinations made under this paragraph.

(d) *Non-permanent appointing authorities.* (1) The Secretary may authorize appointments with time limits in the competitive or excepted service, as appropriate, when the need for an employee's services is not permanent. These appointments will be either temporary, term, or time-limited as defined below:

(i) *Temporary appointments.* Temporary appointments are for a specified period not to exceed 1 year and may be made in either the competitive or the excepted service. A temporary appointment may be extended for 2 additional years, in increments not to exceed 1 year, to a maximum of 3 years. Temporary appointments may be made and extended to positions involving intermittent or seasonal work without regard to the maximum time limits. The circumstances under which a temporary appointment is appropriate include, but are not limited to: Filling a position to address a temporary workload peak or to complete a temporary project; meeting a temporary staffing need that is anticipated not to exceed a 1-year timeframe for reasons such as abolishment, reorganization, or contracting out of a function; anticipated reduction in funding; filling positions temporarily because the positions are expected to be needed for placement of permanent employees who would otherwise be displaced; or when the incumbent will be out of the position for a temporary period of time, but is expected to return. A temporary employee may be reassigned to another temporary position provided the total combined service under the temporary appointment does not exceed the maximum 3-year time limitation, the employee meets the qualification requirements of the position, and the conditions specific to the employee's appointing authority are met. Temporary appointments are made as follows:

(A) *Competitive service.* Temporary appointments to positions in the competitive service may be made using competitive procedures under § 9901.515, using the severe shortage/critical need hiring authorities described in § 9901.511(c), or by using direct hire authority procedures under 5 CFR part 337, as appropriate. Temporary appointments to positions in the competitive service also may be made noncompetitively, consistent with 5 CFR part 316, or by any noncompetitive appointing authorities granted to or by the Secretary.

(B) *Excepted service.* Temporary appointments to positions in the excepted service are made under the procedures prescribed in 5 CFR part 302.

(ii) *Term appointments in the competitive service.* (A) Term appointments are in the competitive service and will be for a period of more than 1 year, but not to exceed 5 years. The term appointment may be extended by an authorized management official for 1 additional year to a maximum of 6 years. The circumstances under which a term appointment is appropriate include, but are not limited to, project work, extraordinary workload, uncertainty of future funding, scheduled contracting out or abolishment of a function, the need to maintain permanent positions for placement of potential surplus employees, or when the incumbent will be out of the position for a significant period of time, but is expected to return. A term employee may be promoted, reassigned or reduced in band to another term position provided the total combined service under the term appointment does not exceed the maximum 6-year time limitation and the employee meets the qualification requirements of the position.

(B) Term appointments may be made using competitive procedures under § 9901.515, using the severe shortage/critical need hiring authorities described in § 9901.511(c), or by using direct hire authority procedures under 5 CFR part 337, as appropriate. Term appointments also may be made noncompetitively consistent with 5 CFR part 316 or by any noncompetitive appointing authorities granted to or by the Secretary.

(iii) *Time-limited appointments in the excepted service.* Time-limited appointments are in the excepted service and will be for a period of more than 1 year. Time-limited appointments to positions in the excepted service are made under the procedures prescribed in 5 CFR part 302. A time-limited employee may be reassigned to another time-limited position in the excepted service provided the employee meets the qualification requirements of the position and the conditions specific to the appointing authority applicable to the employee.

(2) *Conversion to career conditional or career appointment.* A non-permanent employee serving in a competitive service position may be converted without further competition to a permanent position (*i.e.*, career or career conditional) if—

(i) The vacancy announcement met the requirements of § 9901.515(a) and included the possibility of noncompetitive conversion to a permanent position (*i.e.*, career or career conditional) at a later date;

(ii) The individual was appointed using the competitive examining procedures set forth in § 9901.515(b) and (c);

(iii) The employee completed at least 2 years of continuous service at Level 3 (Valued Performer) or better; and

(iv) The employee is converted to a career conditional or career position in the same pay schedule and band for which hired.

(e) *Tenure group.* For reduction in force purposes, NSPS employees appointed to the competitive service are placed in one of the tenure groups defined in 5 CFR 351.501(b) or, if appointed to the excepted service, one of the tenure groups defined in 5 CFR 351.502(b).

§ 9901.512 Probationary periods.

(a) *Initial probationary period.* (1) An employee who is given a career, career conditional, or term appointment in the competitive service or a permanent or

time-limited appointment in the excepted service under this part is required to complete a probationary period when the employee:

(i) Is appointed from a competitive list of eligibles established under § 9901.515, using the severe shortage/critical need hiring authorities described in § 9901.511(c), or by using direct hire authority procedures under 5 CFR part 337; or

(ii) Is appointed to the competitive service either by special authority or by conversion under subpart F or G of 5 CFR part 315, unless specifically exempt from probation by the authority itself; or

(iii) Is reinstated, unless, during any period of service which affords a current basis for reinstatement, the employee completed an initial probationary period; or

(iv) Is appointed to a position in the excepted service under the procedures prescribed in part 302 of this title.

(2) An employee serving an initial probationary period at the time his or her permanent position is converted into NSPS, or at the time he or she is assigned from a non NSPS position to an NSPS position, or at the time he or she is reappointed through the DoD Priority Placement Program or Reemployment Priority List established under part 330 of this title after being involuntarily separated through no fault of the employee, will continue the probationary period; *i.e.*, the probationary period does not start over.

(3) The probationary period required by § 9901.512(a) is as follows:

(i) Competitive service—1 year

(ii) Excepted service—

(A) 2 years for non-preference eligibles;

(B) 1 year for preference eligibles.

(4) *Crediting Service.* (i) Absence in an approved nonpay status while on the rolls (other than for compensable injury or military duty) is creditable up to a total of 22 workdays.

(ii) Service during an initial probationary period from which an employee is separated for performance or conduct does not count toward completion of probation required under a subsequent NSPS appointment.

(iii) The probationary period for part-time employees is computed on the basis of calendar time, in the same manner as for full-time employees. For intermittent employees, *i.e.*, those who do not have regularly scheduled tours of duty, each day or part of a day in pay status counts as 1 day of credit toward the 260 days (actual ''work days'' in a year, excluding weekends) needed to complete the 1-year probationary period. The probationary period may not be completed in less than 1 year calendar time.

(iv) Absence (whether on or off the rolls) due to compensable injury or military duty is creditable in full upon restoration to Federal service under part 353 of this title. An employee serving a probationary period who leaves Federal service to become a volunteer with the Peace Corps or the Corporation for National and Community Services serves the remainder of the probationary period upon reinstatement, provided the employee is reinstated within 90 days of termination of service as a volunteer or training for such service.

(5) *Termination of probationers for unsatisfactory performance and/or conduct.*

When an authorized management official proposes to terminate a competitive service employee during his or her initial probationary period because his or her performance and/or conduct during this period fails to demonstrate his or her fitness or qualifications for continued employment, the official will follow procedures at 5 CFR 315.804.

(6) *Termination of probationers for conditions arising before appointment.* When an authorized management official proposes to terminate a competitive service employee during his or her initial probationary or trial period for reasons based in whole or in part on conditions arising before the employee's appointment, the official will follow procedures at 5 CFR 315.805.

(7) *Appeals.* Under NSPS, a competitive service employee, who is terminated during the initial probationary period, will have limited appeal rights to the Merit Systems Protection Board (MSPB) under 5 CFR 315.806. In addition, any individual serving under a Veterans Recruitment Appointment, whose employment under the appointment is terminated within 1 year after the date of such appointment, will have the same right to appeal that termination as a career or career conditional employee has during the first year of employment in accordance with 5 CFR 315.806.

(b) *Supervisory probationary period.* Under NSPS, an employee is required to serve a probationary period upon initial appointment to a supervisory position. The supervisory probationary period is 1 year. An employee serving a supervisory probationary period at the time his or her permanent position is converted into NSPS will continue the probationary period in the new position; *i.e.*, the supervisory probationary period does not start over.

(1) *Crediting service toward completion of the supervisory probationary period.* (i) An employee who is reassigned, transferred, promoted or reduced in band from one supervisory position to another while serving a supervisory probationary period is subject to the probationary period prescribed for the new position. Service in the former position is credited toward completion of the probationary period in the new position.

(ii) Temporary service in a supervisory position prior to the supervisory probation when there is no break in service is creditable toward completion of a supervisory probationary period. This includes service on temporary promotion or reassignment to another supervisory position while serving a supervisory probation. Service in a nonsupervisory position is not creditable.

(iii) Absence in an approved nonpay status while on the rolls (other than for compensable injury or military duty) is creditable up to a total of 22 workdays.

(iv) Service during a supervisory probationary period from which an employee was separated or demoted for performance and/or conduct does not count toward completion of a supervisory probationary period required under a subsequent appointment.

(v) Absence (whether on or off the rolls) due to compensable injury or military duty is creditable in full toward completion of a supervisory probationary period upon restoration to Federal service under part 353 of this title.

(vi) An employee who has completed a supervisory probationary period prior to movement into an NSPS position is not required to complete another supervisory probationary period.

(2) *Failure to complete the supervisory probationary period.* (i) Except as described in paragraph (b)(2)(ii) of this section, an employee who, for reasons of supervisory performance, does not satisfactorily complete the probationary period is entitled to be assigned to a position at a grade or pay band and pay no lower than that held before assignment to the supervisory position.

(ii) A nonsupervisory employee who is reduced in band into a position that requires a supervisory probationary period and who, for reasons of supervisory performance, does not satisfactorily complete the probationary period is entitled to be reassigned to a grade or pay band no lower than that held when serving the supervisory probation. The employee is eligible for repromotion in accordance with NSPS promotion rules under § 9901.516.

(iii) The agency must notify the employee in writing that he or she is being assigned for failure to complete the supervisory probationary period.

(iv) *Appeals.* (A) A competitive service employee, who, in accordance with the provisions of this section, is assigned to a nonsupervisory position, has no appeal right, except as provided in paragraph (b)(2)(iv)(B) of this section.

(B) A competitive service employee who alleges that a Component action under this section was based on partisan political affiliation or marital status may appeal to the MSPB under 5 CFR 315.908(b).

(v) *Relationship to other actions.* (A) If an employee is required to concurrently serve both a supervisory and an initial probationary period, the latter takes precedence.

(B) An action that demotes an employee to a pay band lower than the one the employee left to accept the supervisory position, for reasons other than supervisory performance, is governed by part 752 of this title.

§ 9901.513 [Reserved]

§ 9901.514 Non-citizen hiring.

The Secretary may establish procedures for appointing non-citizens to permanent, temporary, or time-limited positions in the excepted service, provided there is a demonstrated absence of qualified U.S. citizens and applicable immigration and security requirements are met. Non-citizens may not be promoted, reassigned, or reduced in band, except in situations where a qualified U.S. citizen is once again unavailable.

§ 9901.515 Competitive examining procedures.

(a)(1) Under NSPS, applicants are appointed to career, career conditional, term, and temporary appointments in the competitive service using competitive examining procedures consistent with part 300, subpart A of this title. In recruiting applicants from outside the civil service for competitive appointments to competitive service positions in NSPS, Components with examining authority may use either numerical rating and ranking or alternative ranking and selection procedures (*i.e.*, category rating). Components must decide which procedures to use prior to issuing a vacancy announcement and include this information in the vacancy announcement.

(2) The Secretary will issue uniform policies, procedures, and guidance concerning competitive examining for NSPS within the Department and may delegate in writing authority for competitive examining for NSPS positions. All actions taken under competitive examining procedures will be made without regard to race, color, religion, age, gender, national origin, political affiliation, disability, sexual orientation, marital or family status, or other prohibited criteria, and will be based solely on job-related factors. These policies, procedures, and guidance will be consistent with the ''Uniform Guidelines on Employee Selection Procedures'' (1978) 43 FR 38290 (August 25, 1978) and part 332, subparts A and C of this title.

(b) *Public notice.* (1) Components will accept applications from all U.S. citizens, to include current Federal employees, and at a minimum, will consider applicants from the local commuting area. Components may concurrently consider applicants from other targeted recruitment sources, as specified in the vacancy announcement. A targeted recruitment source is a category or grouping of potentially qualified individuals, such as all students at a particular university in a particular field of study. Targeted recruitment sources will be selected with equal protection considerations in mind, such as whether the sources will reach a diverse applicant pool. If there are insufficient qualified candidates in both the local commuting area and targeted recruitment sources, Components may consider applicants from outside that area.

(2) When limiting consideration, the vacancy announcement will clearly state that consideration will be limited if sufficient qualified candidates are received from the local commuting area and other targeted recruitment sources. If sufficient candidates are not received from the local commuting area and other targeted recruitment sources, consideration will be expanded to all applicants; *i.e.*, the area of consideration will not be expanded incrementally.

(3) No minimum announcement opening period is required. The open period will be based on the type of position being filled and the availability of qualified candidates in the labor market.

(c) *Numerical rating and ranking procedures.* When filling positions using numerical rating and ranking, the procedures issued by the Secretary will be followed. All qualified applicants may be referred and selection may be made from among any referred applicant except that a preference eligible will not be passed over to select a non-preference eligible, unless procedures under 5 U.S.C. 3318 for passing over a preference eligible are followed.

(d) *Alternative ranking and selection procedures (category rating).* When filling positions using category rating, procedures issued by the Secretary will be followed in lieu of the procedures in part 337, subpart C, except for § 337.304, of this title.

(e) *Passing over preference eligibles.* OPM retains the authority to grant or deny a pass over request of a preference eligible with a compensable service-connected disability of 30 percent or more and to make medical qualifications determinations pertaining to preference eligibles. The Secretary has the authority to grant or deny a pass over request of a preference eligible with a compensable service-connected disability of less than 30 percent.

§ 9901.516 Internal placement.

(a) *Determining levels of work and movement within and across career groups.* The determination of when an action is a promotion, reassignment, or reduction in band for competitive or noncompetitive movement and related pay administration purposes, either between NSPS positions or to an NSPS position from a non NSPS position, must be made by applying the definitions of those terms at § 9901.103.

(b) *Eligibility for promotion to full performance band.* An employee with a rating of record of Level 1 or Level 2 is not eligible for promotion to the full performance band of the position until such time as the employee attains a rating of record of Level 3 or above. An employee who does not have an NSPS rating of record may be promoted to the full performance band of the position if an authorized management official conducts a performance assessment and determines that the employee is performing at the equivalent of Level 3 or above.

(c) *Time after competitive appointment restriction.* Restrictions on the movement of an employee immediately after the employee's initial appointment to Federal service as described in 5 CFR part 330, subpart E, are not applicable to NSPS positions.

(d) *Details.* There is no time limit on details or any requirement to extend them incrementally. An official personnel action is not required to document a detail unless the detail exceeds one year, crosses Component and/or Agency lines or assigns an employee from NSPS to another pay system within the Component (*e.g.*, NSPS to General Schedule), or documents developmental rotational assignments or deployment.

(e) *NSPS Merit Promotion Program.* In accordance with the Secretary's authority to prescribe regulations for the

assignment, reassignment, reinstatement, detail, transfer, and promotion of individuals or employees into or within NSPS, the procedures below, in conjunction with the merit promotion requirements in 5 CFR 335.103(b) constitute the NSPS Merit Promotion Program. Internal placement actions may be made on a permanent or temporary basis using competitive and noncompetitive procedures.

(1) All actions taken under the NSPS Merit Promotion Program, whether involving the identification, qualification, evaluation, or selection of candidates, will be made without regard to race, color, religion, age, gender, national origin, political affiliation, disability, sexual orientation, marital or family status or other prohibited criteria and will be based solely on job-related factors.

(2) Vacancy announcements will identify areas of consideration that are sufficiently broad to ensure the availability of high quality candidates, taking into account the nature and level of the positions covered. Employees within the area of consideration who are absent for legitimate reason (*e.g.*, on detail, on leave, at training courses, in the military service, or serving in public international organizations or on Intergovernmental Personnel Act assignments) must receive appropriate consideration, if they apply for a vacant position; *i.e.*, they cannot be excluded from consideration because they are absent. Employees who are unable to apply for vacant positions while they are away may also make other appropriate arrangements for consideration.

(3) To be eligible for promotion or placement, candidates must meet the minimum qualification standards prescribed by either OPM or the Department, as appropriate. Prior to the recruitment process, authorized management officials will identify through job analysis the job-related criteria that will be used to evaluate and determine the best qualified candidates for referral. The job analysis will identify the basic duties and responsibilities of the position being filled; the knowledge, skills, abilities, and/or competencies required to perform the duties and responsibilities; and the factors that are important in evaluating candidates. The job analysis may cover a single position or group of positions, or an occupation or group of occupations, having common characteristics. Candidate evaluation will give due weight to performance appraisals and incentive awards. When evaluating a candidate's performance appraisals, consideration may be given to the differences in performance appraisal systems. Job analysis requirements will conform to the Uniform Guidelines on Employee Selection Procedures in 29 CFR part 1607, and 5 CFR part 300, subpart A.

(4) Management has the right to select or not select from among a group of highly qualified candidates and to select from appropriate sources of candidates.

(5) Components will maintain a temporary record of each promotion to a competitive service position filled through internal competitive procedures to allow reconstruction of the placement action, including documentation on how candidates were rated, ranked, and referred. These records may be destroyed after 2 years or after the program has been formally evaluated by OPM (whichever occurs first) if the time limit for grievance has lapsed and destruction would otherwise be consistent with the Department's Priority Placement Program requirements.

(6) *Competitive actions*. (i) Except as provided in paragraph (e)(7) of this section, competitive procedures apply to promotion of an employee to a higher pay band (*i.e.*, a higher level of work) and to the following actions:

(A) Temporary promotion or detail to a higher pay band for more than 180 days. Prior service during the preceding 12 months under noncompetitive temporary promotions or details to higher pay-banded positions counts toward the 180-day total. A temporary promotion may be made permanent without further competition, provided the temporary promotion was originally made under competitive procedures and the fact that the temporary promotion might lead to a permanent promotion was made known to all potential candidates;

(B) Reassignment or reduction in band to a position with more promotion potential than a position previously held on a permanent basis in the competitive service (except as permitted by reduction in force regulations at 5 CFR part 351);

(C) Transfer to a position at a higher pay band or with more promotion potential than a position previously held on a permanent basis in the competitive service; and

(D) Reinstatement to a permanent, term, or temporary position at a higher pay band or with more promotion potential than a position previously held on a permanent basis in the competitive service.

(ii) When determining whether the promotion potential of a General Schedule position is lower than that of the promotion potential of the NSPS position to which an employee moves, the definitions of higher, lower, and comparable levels of work under § 9901.103 will be applied.

(7) *Exceptions to competition*. (i) Competitive procedures do not apply to:

(A) Promotion resulting from the upgrading of a position to a higher pay band level without significant change in the duties and responsibilities due to the issuance of a new NSPS classification standard or the correction of an initial classification error;

(B) Promotion resulting from an employee's position being classified at a higher pay band level because of additional duties and responsibilities;

(C) Promotion resulting from previous competitive selection for a position with documented potential to a higher pay band;

(D) Temporary promotion or detail to a higher pay band or a position with known promotion potential for 180 days or less;

(E) Promotion to a higher pay band previously held on a permanent basis in the competitive service from which an employee was separated or demoted for other than performance or conduct reasons;

(F) Promotion, reassignment, reduction in band, transfer, or reinstatement to a position having promotion potential no greater than the potential of a position an employee currently holds or previously held on a permanent basis in the competitive service (or in another merit system with which OPM has an approved interchange agreement) and did not lose because of performance or conduct reasons;

(G) Consideration of a candidate not given proper consideration in a competitive promotion action;

(H) Placement resulting from reduction in force procedures under 5 CFR part 351; and

(I) The appointment of career SES appointees with competitive service reinstatement eligibility to any position for which they qualify in the competitive service at any salary level, consistent with 5 CFR part 317, subpart G.

(ii) When determining whether the promotion potential of a General Schedule position is lower than that of the promotion potential of the NSPS position to which an employee moves, the definitions of higher, lower, and comparable levels of work under § 9901.103 will be applied.

(8) *Alternative promotion procedures*. The Secretary may authorize the use of the following alternative procedures to fill NSPS positions. Use of these alternative procedures does not require

the posting of vacancy announcements; however, employees must be made aware that these processes may be utilized via newsletters, bulletin boards, websites, or other common methods of employee communication. Use of these alternative procedures is subject to the requirements of the DoD Priority Placement Program and the Reemployment Priority List. Employees within the area of consideration who are absent for legitimate reason (*e.g.*, on detail, on leave, at training courses, in the military service, or serving in public international organizations or on Intergovernmental Personnel Act assignments) must receive appropriate consideration, *i.e.*, they cannot be excluded from consideration because they are absent.

(i) *Assessment boards.* (A) Boards may convene to assess internal candidates for current and future advancement opportunities based on pre-established criteria. Pre-established criteria may include experience, training, awards, education, performance evaluation scores (ratings of record) or other appropriate information consistent with merit system principles and the ''Uniformed Guidelines on Employee Selection Procedures.''

(B) Boards will categorize employees into specific levels of candidates to generate referral lists of ranked candidates for occupational groups. These referral lists are valid for one year from the date generated. Selection from the referral list should be further justified based on specific job-related factors unique to the actual vacancy.

(C) Boards, which should be comprised of senior level managers (subject matter experts for each particular occupational group), may be convened on an ad hoc basis or may be held annually in conjunction with the performance evaluation process.

(ii) *Alternate certification.* A selecting official may make a by-name request for an individual from any appropriate source of Department or Component employees. The employee may be selected if ranked within the highest quality group as determined by rating factors established for the position.

(iii) *Exceptional performance promotion.* (A) An employee whose most recent rating of record is a Level 5 performance rating may be promoted to a vacant position in a higher pay band when the vacant position has the same occupational series (or related interdisciplinary/interoccupational series) and similar function as the position the employee held at the time he or she received the Level 5 rating.

(B) Selecting officials must determine and document the area of consideration, and must consider all employees in the area of consideration whose current Level 5 rating was based on performance in the same occupational series and similar function as the vacancy being filled.

(9) *Grievances.* Employees have the right to file a complaint relating to a promotion action. Such complaints will be resolved under appropriate grievance procedures. The standards for adjudicating complaints are set forth in 5 CFR part 300, subpart A. There is no right of appeal to OPM, but OPM may conduct investigations of substantial violations of OPM requirements.

[FR Doc. E9–899 Filed 1–15–09; 8:45 am]

BILLING CODE 5001–06–P

DEPARTMENT OF AGRICULTURE

Animal and Plant Health Inspection Service

7 CFR Parts 305 and 318

[Docket No. APHIS–2007–0052]

RIN 0579–AC70

Revision of the Hawaiian and Territorial Fruits and Vegetables Regulations

AGENCY: Animal and Plant Health Inspection Service, USDA.

ACTION: Final rule.

SUMMARY: We are revising and reorganizing the regulations pertaining to the interstate movement of fruits and vegetables from Hawaii and the territories to consolidate requirements of general applicability and eliminate redundant requirements, update terms and remove outdated requirements and references, and make various editorial and nonsubstantive changes to the regulations to make them easier to use. We are also making substantive changes to the regulations including establishing criteria within the regulations that, if met, will allow us to approve certain new fruits and vegetables for interstate movement in the United States and to acknowledge pest-free areas in Hawaii and U.S. territories expeditiously, and removing the listing in the regulations of some specific commodities as regulated articles. These changes are intended to simplify and expedite our processes for approving certain regulated articles for interstate movement and acknowledging pest-free areas while continuing to allow for public participation in the processes. This final rule does not allow for the interstate movement of any specific new fruits or vegetables, nor does it alter the conditions for interstate movement of currently approved fruits or vegetables. These changes will make our domestic interstate movement regulations more consistent with our fruits and vegetables import regulations. The changes in this final rule will not alter the manner in which the risk associated with a regulated article interstate movement request is evaluated, nor will they alter the manner in which those risks are ultimately mitigated.

DATES: *Effective Date:* February 17, 2009.

FOR FURTHER INFORMATION CONTACT: Mr. David Lamb, Import Specialist, Commodity Import Analysis and Operations, PPQ, APHIS, 4700 River Road, Unit 133, Riverdale, MD 20737–1231; (301) 734–8758.

SUPPLEMENTARY INFORMATION:

Background

Under the regulations in 7 CFR part 318, ''Hawaiian and Territorial Quarantine Notices'' (referred to below as the regulations), the Animal and Plant Health Inspection Service (APHIS) of the U.S. Department of Agriculture (USDA or the Department) prohibits or restricts the interstate movement of fruits, vegetables, and other products from Hawaii, Puerto Rico, the U.S. Virgin Islands, and Guam to the continental United States to prevent the spread of plant pests and noxious weeds that occur in Hawaii and the territories.

On June 17, 2008, we published in the **Federal Register** (73 FR 34202–34224, Docket No. APHIS–2007–0052) a proposal [1] to amend the regulations by revising and reorganizing those portions of the regulations pertaining to the interstate movement of fruits and vegetables to consolidate requirements of general applicability and eliminate redundant requirements, updating terms and remove outdated requirements and references, and making various editorial and nonsubstantive changes to the regulations to make them easier to use. We also proposed to make substantive changes to the regulations including: Establishing criteria within the regulations that, if met, would allow us to approve certain new fruits and vegetables for interstate movement in the United States and to acknowledge pest-free areas in Hawaii and U.S. territories expeditiously; and removing the listing in the regulations of some specific commodities as regulated

[1] To view the proposed rule and the comments we received, go to *http://www.regulations.gov/fdmspublic/component/main?main=DocketDetail&d=APHIS-2007-0052.*

articles. These changes were intended to simplify and expedite our processes for approving certain regulated articles for interstate movement and pest-free areas while continuing to allow for public participation in the processes.

We solicited comments concerning our proposal for 60 days ending August 18, 2008. We received three comments by that date. They were from private citizens. They are discussed below.

One commenter raised concerns about actions taken at Guam ports of entry with regard to plants moved interstate from Hawaii. The commenter stated that inspectors in Guam are requiring treatment or destruction of plants due to the presence on the plants of a black fungus that is already present in Guam. The commenter stated that the fungus occurs on plants after they have been treated to ensure that the coqui frog is not introduced into Guam. The commenter also stated that the fungus is present in Guam and can be easily controlled by wiping it off the plant.

The issues raised by the commenter did not relate to any specific requirements for treatments that are included in the regulations or that were addressed by the proposal. We will ensure that inspectors in Guam use the least restrictive measure necessary to prevent the introduction of plant pests into Guam.

One commenter opposed the use of irradiation as a phytosanitary treatment.

Irradiation has been proven to be an effective phytosanitary treatment for certain plant pests. Therefore, it is appropriate to provide for its use as an option in mitigating the risk associated with those plant pests. We did not propose to change the pests for which irradiation is an approved treatment or to allow the interstate movement of any new fruits or vegetables with irradiation treatment.

One commenter recommended the use of Hazard Analysis and Critical Control Point plans in phytosanitary systems to prevent risks to health and the environment.

We perform a pest risk analysis when determining whether to authorize the interstate movement of a fruit or vegetable from Hawaii or the territories. Our pest risk analysis process takes such risks into account.

We are making no changes in response to these comments. However, we are making minor changes to the proposal in this final rule.

We proposed to establish a performance-based process for approving the interstate movement of commodities that, based on the findings of a pest risk analysis, can be safely moved interstate subject to one or more of certain designated phytosanitary measures. One of the designated measures we proposed to use in this process was inspection in the first State of arrival. This proposed designated measure was similar to a designated measure used in the performance-based process for approving the importation of fruits and vegetables in § 319.56–4. That designated measure is inspection upon arrival in the United States.

However, while imported fruits and vegetables are first subject to U.S. Government inspectors upon arrival in the United States, fruits and vegetables moved interstate are always subject to State or Federal inspection, whether inspected in the State of origin or in the State of arrival. Indeed, the primary inspection for fruits and vegetables moved interstate is often performed in the State of origin. Therefore, we are changing the designated measure we proposed to establish in § 318.13–4(b)(1) by referring to inspection either in the State of origin or in the State of first arrival. We are making a similar change to proposed paragraph (c)(2)(i)(B)(*1*) of § 318.13–4, which referred to this designated measure.

We proposed to amend § 305.17 to indicate that quick freezing treatment is approved for fruits and vegetables moved interstate from Hawaii, Puerto Rico, Guam, the Commonwealth of the Northern Mariana Islands (CNMI), or the U.S. Virgin Islands, except for the fruits and vegetables listed in paragraph (b) of § 305.17. However, we neglected to propose to amend paragraph (b) to indicate that quick freezing is not an authorized treatment for mango with seeds from Hawaii, although mango with seeds is listed in the Hawaii fruits and vegetables manual as a fruit for which quick freezing treatment is not authorized. In this final rule, we are amending paragraph (b) of § 305.17 to indicate that quick freezing treatment is not authorized for mango with seeds from Hawaii.

We are also making some nonsubstantive editorial changes:

- The part heading for 7 CFR part 318 has read ''Hawaiian and Territorial Quarantine Notices.'' We are changing this part heading to read ''State of Hawaii and Territories Quarantine Notices.''
- In paragraph (b) of proposed § 318.13–1, ''Notice of quarantine,'' we indicated that the movement of (among other things) plants and portions of plants from Hawaii and the territories would be prohibited except as provided in the proposed subpart ''Regulated Articles From Hawaii and the Territories.'' However, the movement of cotton plants and plant parts under certain conditions is authorized under ''Subpart—Territorial Cotton, Cottonseed, and Cottonseed Products'' (§§ 318.47 through 318.47–4), and we did not propose to change that subpart or those requirements. Accordingly, in this final rule, paragraph (b) of § 318.13–1 refers to the movement of plants and portions of plants being authorized under ''Subpart—Territorial Cotton, Cottonseed, and Cottonseed Products'' as well as under ''Subpart—Regulated Articles From Hawaii and the Territories.''
- In the proposed regulatory text, we made several references to the term ''consignment'' and to the Plant Protection and Quarantine (PPQ) program, but did not define those terms. In this final rule, we are adding definitions of those terms. The definition of ''consignment'' is identical to the definition of that term in our imported fruits and vegetables regulations (in § 319.56–2) except that it refers to certificates and limited permits rather than to phytosanitary certificates.
- We proposed to amend the definition of ''cut flowers'' to indicate that such flowers are customarily used in the florist trade and not planting. In this final rule, we are changing the proposed definition by adding the word ''for'' before ''planting,'' to further clarify the intended use of cut flowers.
- We proposed to retain the definitions of ''State'' and ''United States'' that have been set out in § 318.13–1. However, these definitions are not consistent with the definitions of those terms in the Plant Protection Act (7 U.S.C. 7701 *et seq.*). In this final rule, we are adding definitions of these terms that are based on the Plant Protection Act definitions. The new definitions are substantively identical to the previous ones.
- The regulations in §§ 318.13–17 and 318.58–12 have provided certain general conditions for transit of fruits and vegetables into or through the continental United States from Hawaii and from Puerto Rico and the U.S. Virgin Islands, respectively. We proposed to consolidate these provisions in § 318.13–6. In the context of labeling requirements, proposed § 318.13–6 referred both to ''English common names'' and ''English names.'' In this final rule, § 318.13–6 refers only to ''English common names'' for consistency and clarity.
- The regulations in §§ 318.13–8 and 318.54–8 have stated that persons, means of conveyance (including ships, other ocean-going craft, and aircraft), baggage, cargo, and any other articles that are destined for movement, are moving, or have been moved interstate

from Hawaii and Puerto Rico, respectively, are subject to agricultural inspection at various points during movement. We proposed to consolidate these requirements in § 318.13–8 but otherwise did not propose to change them. In this final rule, we are adding the words ''In addition to the inspection requirements in §§ 318.13–9 and 318.13–10'' to the beginning of § 318.13–8, to ensure that the reader is aware of all the provisions related to inspection.

• We proposed to add restrictions on the interstate movement of processed fruits, vegetables, and other products in a new § 318.13–14. In our proposed regulatory text, we referred the reader to the fruits and vegetables manuals to find which processed products are approved for interstate movement. In the final rule, we are adding to the new § 318.13–14 the Web addresses where those manuals can be found.

Therefore, for the reasons given in the proposed rule and in this document, we are adopting the proposed rule as a final rule, with the changes discussed in this document.

Executive Order 12866 and Regulatory Flexibility Act

This final rule has been reviewed under Executive Order 12866. The rule has been determined to be not significant for the purposes of Executive Order 12866 and, therefore, has not been reviewed by the Office of Management and Budget.

In accordance with the Regulatory Flexibility Act, we have analyzed the potential economic effects of this action on small entities.

This rule revises and reorganizes the regulations pertaining to the interstate movement of fruits and vegetables to consolidate requirements of general applicability and eliminates redundant requirements, updates terms and removes outdated requirements and references, makes various editorial and nonsubstantive changes to regulations to make them easier to use, and expand their applicability to include CNMI and all other territories and possessions of the United States.

APHIS is also making substantive changes to the regulations. This rule establishes criteria within the regulations that, if met, allow APHIS to approve certain fruits and vegetables for interstate movement and to acknowledge pest-free areas in Hawaii and U.S. territories without undertaking rulemaking. Currently, these commodities may only be brought into the continental United States after completion of a pest risk analysis, risk management document, and rulemaking, if the commodities are not currently included on the list of regulated articles.[2] A similar type of notice-based process has been implemented by APHIS for approving imports. Implementing this rule ensures equitable treatment for domestic producers. This rule also does away with the process of listing in the regulations specific commodities as regulated articles. These changes simplify and expedite the APHIS processes for approving certain regulated articles for interstate movement and pest-free areas while continuing to allow for public participation in the process.

Description and Estimate of the Number of Small Entities Affected by the Rule

Those entities most likely to be economically affected by the rule are wholesalers and producers of fruits and vegetables. The Small Business Administration (SBA) has established guidelines for determining which establishments are to be considered small. A firm primarily engaged in wholesaling fresh fruits and vegetables is considered small if it employs not more than 100 persons. In 2002, about 95 percent (4,044 of 4,244) of fresh fruit and vegetable wholesalers in the United States were small by SBA standards.[3] All types of fruit and vegetable farms are considered small if they have annual receipts of $0.75 million or less. With some exceptions, vegetable and melon farms are largely individually owned and relatively small, with two-thirds harvesting fewer than 25 acres. In 2002, between 80 and 84 percent of U.S. vegetable and melon farms were considered small. Similarly, although numbers have declined, fruit and tree nut production is still dominated by small, family, or individually run farm operations. In 2002, between 92 and 95 percent of all fruit and tree nut farms were considered small.[4]

Expected Effects of the Rule

The fruit and tree nut and the vegetable and melon sectors are vibrant in the United States, for both consumers and producers. The United States is one of the world's leading producers and consumers of vegetables and melons. The annual sale of vegetables and melons earned farmers $17.3 billion on average during 2001–03, more than 8 percent of all farm cash receipts (crops and livestock) and 17 percent of crop receipts. Similarly, the U.S. fruit and tree nuts industry is an important component of the U.S. farm sector. It generated over $12 billion in U.S. farm cash receipts annually in the early 2000s, averaging 6 percent of all farm cash receipts and 12 percent of all crop receipts.

The typical American annually consumes over 280 pounds of fruit and tree nuts (fresh and processed products) each year, ranking third in per capita consumption of major food groups, next to dairy and vegetables. Annual per capita consumption of all vegetables and melons rose 4 percent from 1991–93 to 2001–03, reaching 440 pounds as fresh consumption increased and processed fell. Consumer expenditures for fruit and vegetables are growing faster than for any food group other than meats. Increased domestic and world supplies, rising disposable incomes, and a growing and more culturally diverse population will continue to expand consumer demand for fruits and vegetables in the United States over the next decade. Another important stimulus is continued emphasis on health and nutrition. The fruit and vegetable industries have been very active in promoting the health benefits of fruit and vegetable consumption.

Hawaii and the U.S. territories are important sources of fresh fruits and vegetables for the rest of the United States. In 2002, 666 Hawaiian farms produced more than $55 million in vegetables, melons, potatoes, and sweet potatoes, equal to about 10 percent of total Hawaiian agricultural sales, and 2,582 Hawaiian farms produced more than $179 million in fruits, tree nuts, and berries, accounting for more than 33 percent of total Hawaiian agricultural sales. In 2002, Hawaii ranked seventh among the States in the production of fruits, tree nuts, and berries, and 28th in the production of vegetables, melons, potatoes, and sweet potatoes. Hawaii's growers of tropical specialty fruit produced and sold an estimated 1.5 million pounds of fresh fruit in 2005, according to the National Agricultural Statistics Service Hawaii Field Office. This amount was half again as large as the revised 2004 output of 1 million pounds and the highest on record for fresh tropical specialty fruit since records began to be published for this group.

[2] Regulated articles are fruits and vegetables that APHIS has determined to not involve the risk of spreading plant pests as ordinarily packaged or after treatment.

[3] 2002 Economic Census. Department of Commerce. U.S. Bureau of the Census. North American Industry Classification System (NAICS) Category—424480: Fresh fruit and vegetable merchant wholesalers.

[4] 2002 Census of Agriculture. U.S. Department of Agriculture. National Agricultural Statistics Service. NAICS Categories—1112: Vegetable and melon farming; 1113: Fruit and tree nut farming.

Notice-Based Process

Currently, the regulations prohibit the interstate movement of fruits, vegetables, and other products from Hawaii, Puerto Rico, the U.S. Virgin Islands, and Guam into the continental United States or any other territory or possession of the United States unless the regulations specifically allow the interstate movement of the particular fruit, vegetable, or regulated article. As a condition of interstate movement under the regulations, all approved fruits, vegetables, and other products are subject to some type of restriction to ensure that the regulated article does not act as a pathway for the introduction or dissemination of plant pests or noxious weeds into the United States.

Typically, certain products may be moved interstate if the movement is authorized by a limited permit or a valid certificate issued on the basis of inspection and verification of pest freedom, or on the basis of treatment. These requirements are considered universal requirements. Certain other fruits, vegetables, or products must meet additional requirements to be eligible for movement including distribution restrictions, packing requirements, and other measures determined to be necessary to mitigate the pest risk posed by the particular commodity. This rule establishes a new regulatory approach whereby APHIS will approve or reject certain fruits and vegetables for movement into the continental United States from Hawaii and the U.S. territories without specific prior rulemaking, but in a manner that still provides for public review and comment on the scientific documentation on which such decisions are based. This notice-based process involves a risk analysis that identifies all the pests of concern, documents how all quarantine pests will be removed from the movement pathway through inspection and/or treatment, and allows for public comment.

Currently, exceptions are made to the prohibition for specific commodities moving from Hawaii and the territories provided that the pest risk they pose is mitigated by specific phytosanitary measures. For the vast majority of commodities listed in 7 CFR part 318, inspection and/or treatment are the phytosanitary measures applied to ensure that a commodity does not convey plant pests. For other commodities, APHIS requires a more complex risk mitigation strategy (*i.e.*, a systems approach).

In considering whether to newly authorize the movement of a commodity, APHIS identifies the phytosanitary measures necessary to address the pest risk posed by the commodity. As a matter of current APHIS policy, any decision made on whether to allow the movement of a commodity from Hawaii or the U.S. territories into the continental United States proceeds through the rulemaking process before the decision can be implemented and the movement allowed.

The notice-based process will apply only to fruits and vegetables that, based on the findings of a risk analysis, APHIS determines can be safely moved interstate subject to one or more designated risk management measures. These designated measures are: (1) Inspection in the State of origin or in the State of first arrival and compliance with all applicable provisions of 318.13–3; (2) treatment in accordance with part 305 and certification of the treatment by an inspector; (3) inspection and certification in the State of origin by an inspector or a State agricultural inspector and found free of one or more specific quarantine pests identified by risk analysis as likely to follow the pathway; (4) commercial consignments only; (5) originating from a pest-free area in the State of origin and the grower from which the commodity originated has entered into a compliance agreement with the Administrator; and (6) subject to box marking or labeling requirements. Fruits and vegetables that require additional risk management beyond one or more of the designated measures cited above will follow the current rulemaking-based process.

By eliminating the need for specific rulemaking for commodities for which the notice-based process is appropriate, considerable time savings could be reaped. The current process for approving commodities takes a notable period of time, ranging on average from 18 months to upwards of 3 years (beginning with the initial request and ending with the publication of the final rule). A significant portion of this time is devoted to the rulemaking process. This rule will reduce the time needed for approval for interstate movement of some fruits and vegetables without eliminating the opportunity for public participation in our analysis of risk.

Consumers benefit from the opportunity to purchase fruits and vegetables from a variety of sources. Consumer expenditures for fruit and vegetables are growing faster than for any food group other than meats. Many of the commodities that will be covered by this rule are likely to be niche products, such as tropical specialty fruits that are unavailable or limited in availability in the continental United States. This rule will allow producers to more quickly meet consumer demand for those niche products. In addition, most fruit and vegetable production in the continental United States is seasonal, with the largest harvests occurring during the summer and fall. Hawaiian and territorial produce supplement the supply of fruits and vegetables in the continental United States, especially fresh products during the winter, resulting in increased choices for consumers. Hawaiian and territorial producers will also benefit from the ability to more quickly respond to the demands of consumers.

In the current process, APHIS proceeds through rulemaking once it has conducted a risk analysis and identified what phytosanitary measures are necessary to address the pest risk posed by the commodity for which permission for movement into the continental United States has been requested. This rule amends the fruits and vegetables regulations to allow the commodity to be listed as eligible for movement under specified conditions. We expect that requests under this process will lead relatively quickly to the interstate shipment of particular fruits and vegetables that would otherwise face delay under the rulemaking process. There are certain statutory, executive branch, and departmental process requirements that are typically not required under a notice-based process.

The movement requests most likely to qualify for the notice-based process will be for specialty crops having limited markets. These requests, when their risk analyses have been completed and needed phytosanitary measures have been identified, are currently often grouped together for rulemaking. We estimate that by using a notice-based approach, commodity interstate movement approvals could be accomplished 6 to 12 months sooner than when using the rulemaking approach.

This rule does not alter the manner in which the risks associated with a commodity movement request are evaluated, nor does it alter the manner in which those risks are ultimately mitigated. The change merely creates a process whereby certain fruits and vegetables from Hawaii and the territories will be able to more quickly be approved for movement into the continental United States, once it has been determined that the commodity can be safely moved subject to one or more designated risk management measures.

Approval of Pest-Free Areas

APHIS currently recognizes changes in pest-free areas via rulemaking. For example, if an area where fruit flies are known to exist is determined to be free of fruit flies, in order for a fruit or vegetable that is a fruit fly host to move out of that area into the continental United States without treatment or other mitigation for fruit flies, APHIS must list the specific area in the regulations as a fruit-fly free area. If changes in the pest-free status of such areas occur, APHIS must revise the regulations to recognize the changes. Given that such changes in the regulations can only be made via rulemaking, the regulations may not reflect the actual status of a particular area given the time it takes to propose a change to the regulations, respond to comments on the proposal, and to publish a final rule amending the regulations.

Under this rule, when provided with evidence that the pest-free status of an area has changed, APHIS will publish in the **Federal Register** a notice of the proposed change in status and take public comment for 60 days. If no comments submitted to APHIS provide evidence that its determination of pest freedom is incorrect, APHIS will announce that it considers the area to be free of the specified pest and that the area in question meets certain criteria.

This provision will have no immediate impact because there are currently no designated pest-free areas in Hawaii or the territories. However, it will allow APHIS to more quickly recognize changes in the pest-free status of such areas, if any are established in Hawaii or the U.S. territories in the future.

Listing of Specific Commodities Allowed To Move Into the Continental United States

Under this rule, currently approved commodities will no longer be listed in the regulations, nor will commodities that are approved for movement subject to one or more of the designated measures described previously be listed. Consequently, the lists of commodities will be removed from the Code of Federal Regulations, as will a number of other provisions in current commodity-specific sections in the regulations that authorize movement of specific fruits and vegetables in accordance with one or more of the designated measures.

APHIS' Hawaii/CNMI and Puerto Rico/U.S. Virgin Islands fruits and vegetable manuals will list approved commodities, and the documentation supporting their approval will be made available on the Internet at *http://www.aphis.usda.gov/import_export/plants/manuals/ports/downloads/hawaii.pdf* or *http://www.aphis.usda.gov/import_export/plants/manuals/ports/downloads/puerto_rico.pdf*. These changes will not alter how or whether a commodity is approved for movement, merely how that status is presented. Therefore, these changes should therefore have little, if any, impact.

Regulated Articles Allowed Interstate Movement Subject to Specific Conditions

Currently, the regulations contain provisions for interstate movement of certain regulated articles from Hawaii, Puerto Rico, the U.S. Virgin Islands, and Guam to other locations in the United States subject to inspection and other universal requirements. Most such commodities will no longer be listed in the regulations under this rule. Those commodities that are allowed interstate movement subject to additional measures beyond the notice-based process measures will be listed. Such commodities will remain subject to the same restrictions that currently apply to their interstate movement.

In many cases, the fruits, vegetables, and other products from Hawaii, Puerto Rico, the U.S. Virgin Islands, Guam, and CNMI subject to additional measures for movement have not been specifically listed in the regulations. This rule will therefore add some commodities to the regulations. However, these measures are currently being enforced administratively. Therefore, these additions to the regulations do not represent a significant change to interstate movement policy, and should have little, if any, impact.

Reorganization of the Regulations and Consolidation of Similar Provisions

This rule will also revise and reorganize the regulations pertaining to the interstate movement of fruits and vegetables to consolidate requirements of general applicability and eliminate redundant requirements, update terms and remove outdated requirements and references, and make various editorial and nonsubstantive changes to the regulations to make them easier to use. These changes will not, however, represent a change in program operations, and should therefore have little, if any, impact.

Conclusion

In sum, APHIS expects little impact on the total supply of fruits and vegetables available in the continental United States, and little change in the movement of fruits and vegetables from Hawaii and the territories; effects on U.S. producers, marketers and consumers are expected to be small. The main provision of this rule represents a significant structural revision of the regulations pertaining to the movement of fruits and vegetables from Hawaii, Puerto Rico, the U.S. Virgin Islands, Guam, and CNMI, and establishes a new process for approving commodities for movement into the continental United States. However, those commodity movement requests most likely to qualify for the notice-based process will be for specialty crops having limited markets. This rule will not alter the conditions that apply to currently approved fruits or vegetables.

Of particular note with respect to the approval process, the change will allow a newly approved commodity to move more quickly into commerce to the benefit of consumers and Hawaiian and territorial producers once it has been determined that the commodity can be safely moved interstate subject to one or more designated risk management measures. This rule, itself, will not allow for the interstate movement of any specific fruits or vegetables, nor will it alter the conditions for interstate movement of currently approved fruits or vegetables. These changes do not alter the manner in which the risk associated with a commodity interstate movement request is evaluated, nor do they alter the manner in which those risks are ultimately mitigated. Consumers will have quicker access to fruits and vegetables approved for movement using the notice-based process, while risks will still be evaluated and appropriate mitigations required, as they are currently.

Under these circumstances, the Administrator of the Animal and Plant Health Inspection Service has determined that this action will not have a significant economic impact on a substantial number of small entities.

Executive Order 12372

This program/activity is listed in the Catalog of Federal Domestic Assistance under No. 10.025 and is subject to Executive Order 12372, which requires intergovernmental consultation with State and local officials. (See 7 CFR part 3015, subpart V.)

Executive Order 12988

This final rule has been reviewed under Executive Order 12988, Civil Justice Reform. This rule: (1) Preempts all State and local laws and regulations that are inconsistent with this rule; (2) has no retroactive effect; and (3) does not require administrative proceedings

before parties may file suit in court challenging this rule.

National Environmental Policy Act

The majority of the regulatory changes in this document are nonsubstantive, and would therefore have no effects on the environment. However, this rule will allow APHIS to approve certain new articles for interstate movement without undertaking rulemaking. Despite the fact that the interstate movement of these fruits and vegetables will no longer be contingent on the completion of rulemaking, the requirements of the National Environmental Policy Act of 1969, as amended (42 U.S.C. 4321 *et seq.*), will still apply. As such, for each additional regulated article approved for interstate movement, APHIS will make available to the public documentation related to our analysis of the potential environmental effects of the interstate movement of new regulated articles. This documentation would likely be made available at the same time and via the same **Federal Register** notice as the risk analysis for the proposed article.

Paperwork Reduction Act

In accordance with the Paperwork Reduction Act of 1995 (44 U.S.C. 3501 *et seq.*), the information collection or recordkeeping requirements included in this rule have been approved by the Office of Management and Budget (OMB) under OMB control number 0579–0346.

E-Government Act Compliance

The Animal and Plant Health Inspection Service is committed to compliance with the E-Government Act to promote the use of the Internet and other information technologies, to provide increased opportunities for citizen access to Government information and services, and for other purposes. For information pertinent to E-Government Act compliance related to this rule, please contact Mrs. Celeste Sickles, APHIS' Information Collection Coordinator, at (301) 851–2908.

Lists of Subjects

7 CFR Part 305

Irradiation, Phytosanitary treatment, Plant diseases and pests, Quarantine, Reporting and recordkeeping requirements.

7 CFR Part 318

Cotton, Cottonseeds, Fruits, Guam, Hawaii, Plant diseases and pests, Puerto Rico, Quarantine, Transportation, Vegetables, Virgin Islands.

■ Accordingly, we are amending 7 CFR parts 305 and 318 as follows:

PART 305—PHYTOSANITARY TREATMENTS

■ 1. The authority citation for part 305 continues to read as follows:

Authority: 7 U.S.C. 7701–7772 and 7781–7786; 21 U.S.C. 136 and 136a; 7 CFR 2.22, 2.80, and 371.3.

■ 2. Section 305.17 is amended as follows:

■ a. By revising paragraph (a) to read as set forth below.

■ b. In paragraph (b)(3), by adding the words ''from Hawaii and'' after the word ''seeds''.

§ 305.17 Authorized treatments; exceptions.

(a) Quick freeze is an authorized treatment for all fruits and vegetables imported into the United States or moved interstate from Hawaii, Puerto Rico, Guam, the Commonwealth of the Northern Mariana Islands, or the U.S. Virgin Islands, except for those fruits and vegetables listed in paragraph (b) of this section. Quick freeze for fruits and vegetables imported into the United States or moved interstate from Hawaii, Puerto Rico, Guam, the Commonwealth of the Northern Mariana Islands, or the U.S. Virgin Islands must be conducted in accordance with § 319.56–12 of this subchapter for imported fruits and vegetables and § 318.13–13 of this subchapter for fruits and vegetables moved interstate.

* * * * *

§ 305.34 [Amended]

■ 3. In § 305.34, paragraph (b)(2)(iii) is amended by removing the citation ''§ 318.13–4(d)'' and adding the citation ''§ 318.13–3(d)'' in its place.

PART 318—STATE OF HAWAII AND TERRITORIES QUARANTINE NOTICES

■ 4. The authority citation for part 318 continues to read as follows:

Authority: 7 U.S.C. 7701–7772 and 7781–7786; 7 CFR 2.22, 2.80, and 371.3.

■ 5. The part heading for part 318 is revised to read as set forth above.

■ 6. Subpart—Hawaiian Fruits, Vegetables, and Flowers, consisting of §§ 318.13 through 318.13–17, is removed and a new Subpart—Regulated Articles From Hawaii and the Territories, §§ 318.13–1 through 318.13–25, is added to read as follows:

Subpart—Regulated Articles From Hawaii and the Territories

Sec.

318.13–1 Notice of quarantine.
318.13–2 Definitions.
318.13–3 General requirements for all regulated articles.
318.13–4 Approval of certain fruits and vegetables for interstate movement.
318.13–5 Pest-free areas.
318.13–6 Transit of regulated articles from Hawaii or the territories into or through the continental United States.
318.13–7 Products as ships' stores or in the possession of passengers or crew.
318.13–8 Articles and persons subject to inspection.
318.13–9 Inspection and disinfection of means of conveyance.
318.13–10 Inspection of baggage, other personal effects, and cargo.
318.13–11 Posting of warning notice and distribution of baggage declarations.
318.13–12 Movement by the U.S. Department of Agriculture.
318.13–13 Movement of frozen fruits and vegetables.
318.13–14 Movement of processed fruits, vegetables, and other products.
318.13–15 Parcel post inspection.
318.13–16 Regulated articles allowed interstate movement subject to specified conditions.
318.13–17 Regulated articles from Guam.
318.13–18 through 318.13–20 [Reserved]
318.13–21 Avocados from Hawaii to Alaska.
318.13–22 Bananas from Hawaii.
318.13–23 Cut flowers from Hawaii.
318.13–24 Sweetpotatoes from Puerto Rico.
318.13–25 Sweetpotatoes from Hawaii.

Subpart—Regulated Articles From Hawaii and the Territories

§ 318.13–1 Notice of quarantine.

(a) Under the authority of section 412 of the Plant Protection Act, the Secretary of Agriculture may prohibit or restrict the movement in interstate commerce of any plant or plant product if the Secretary determines that the prohibition or restriction is necessary to prevent the introduction into the United States or the dissemination within the United States of a plant pest or noxious weed.

(b) The Secretary has determined that it is necessary to prohibit the interstate movement of cut flowers and fruits and vegetables and plants and portions of plants from Hawaii, Puerto Rico, the U.S. Virgin Islands, Guam, and the Commonwealth of the Northern Mariana Islands except as provided in this subpart or as provided in ''Subpart—Territorial Cotton, Cottonseed, and Cottonseed Products'' in this part.

§ 318.13–2 Definitions.

Administrator. The Administrator of the Animal and Plant Health Inspection Service (APHIS), U.S. Department of Agriculture, or any other employee of APHIS to whom authority has been

delegated to act in the Administrator's stead.

Animal and Plant Health Inspection Service. The Animal and Plant Health Inspection Service (APHIS) of the U.S. Department of Agriculture.

Approved growing media. Agar or other translucent tissue culture media, buckwheat hulls, clean ocean sand, excelsior, exfoliated vermiculite, ground cork, ground peat, ground rubber, paper, polymer stabilized cellulose, quarry gravel, sawdust, wood shavings, cork shavings, sphagnum moss, tree fern slab (approved only for orchids), and vegetable fiber (free of pulp) including coconut and osmunda, but excluding cotton and sugarcane.

Certification (certified). A type of authorization, issued by an inspector, evidencing freedom from infestation, to allow the movement of certain regulated articles in accordance with the regulations in this subpart. ''Certified'' shall be construed accordingly.

Commercial consignment. A lot of fruits or vegetables that an inspector identifies as having been produced for sale or distribution in mass markets. Such identification will be based on a variety of indicators, including, but not limited to: Quantity of produce, type of packaging, identification of grower and packinghouse on the packaging, and documents consigning the fruits or vegetables to a wholesaler or retailer.

Compliance agreement. Any agreement to comply with stipulated conditions as prescribed under § 318.13–3 or § 318.13–4 or § 305.34 of this chapter, executed by any person to facilitate the interstate movement of regulated articles under this subpart.

Consignment. A quantity of plants, plant products, and/or other articles, including fruits or vegetables, being moved from one country to another and covered, when required, by a single certificate or limited permit (a consignment may be composed of one or more commodities or lots).

Continental United States. The 48 contiguous States, Alaska, and the District of Columbia.

Cut flower. Any cut blooms, fresh foliage, and dried decorative plant material customarily used in the florist trade and not for planting; and being the severed portion of a plant, including the inflorescence, and any parts of the plant attached thereto, in a fresh state.

Disinfection (disinfect and disinfected). The application to parts or all of a ship, vessel, other surface craft, or aircraft of a treatment that may be designated by the inspector as effective against such plant pests as may be present. (''Disinfect'' and ''disinfected'' shall be construed accordingly.)

Fruits and vegetables. A commodity class for fresh parts of plants intended for consumption or processing and not planting.

Inspector. A State agricultural inspector or any individual authorized by the Administrator of APHIS or the Commissioner of Customs and Border Protection, Department of Homeland Security, to enforce the regulations in this subpart.

Interstate. From one State into or through any other State; or within the District of Columbia, Guam, the Virgin Islands of the United States, or any other territory or possession of the United States.

Limited permit. A document issued by an inspector or a person operating under a compliance agreement for the interstate movement of regulated articles to a specified destination for:

(1) Consumption, limited utilization or processing, or treatment; or

(2) Movement into or through the continental United States in conformity with a transit permit.

Lot. A number of units of a single commodity, identifiable by its homogeneity of composition and origin, forming all or part of a consignment.

Means of conveyance. A ship, truck, aircraft, or railcar.

Moved (move and movement). Shipped, offered for shipment to a common carrier, received for transportation or transported by a common carrier, or carried, transported, moved, or allowed to be moved, directly or indirectly, from Hawaii, Puerto Rico, Guam, the Commonwealth of the Northern Marina Islands, or the U.S. Virgin Islands into or through the continental United States or any other State or territory of the United States (or from or into or through other places as specified in this subpart). ''Move'' and ''movement'' shall be construed accordingly.

Packing materials. Any plant or plant product, soil, or other substance associated with or accompanying any commodity or consignment to serve for filling, wrapping, ties, lining, mats, moisture retention, protection, or any other auxiliary purpose. The word ''packing,'' as used in the expression ''packing materials,'' includes the presence of such materials within, in contact with, or accompanying a consignment.

Person. Any individual, partnership, corporation, association, joint venture, or other legal entity.

Plant debris. Detached leaves, twigs, or other portions of plants, or plant litter or rubbish as distinguished from approved parts of clean fruits and vegetables, or other commercial articles.

Plant pests. Any living stage of any of the following that can directly or indirectly injure, cause damage to, or cause disease in any plant or plant product: A protozoan, nonhuman animal, parasitic plant, bacterium, fungus, virus or viroid, infectious agent or other pathogen, or any article similar to or allied with any of those articles.

Plant Protection and Quarantine (PPQ). The Plant Protection and Quarantine program of APHIS.

Regulated articles. Fruits or vegetables in the raw or unprocessed state; cut flowers; seeds; and plants or plant products for nonpropagative or propagative use.

Sealed (sealable) container. A completely enclosed container designed for the storage and/or transportation of commercial air, sea, rail, or truck cargo, and constructed of metal or fiberglass, or other similarly sturdy and impenetrable material, providing an enclosure accessed through doors that are closed and secured with a lock or seal. Sealed (sealable) containers used for sea consignments are distinct and separable from the means of conveyance carrying them when arriving in and in transit through the continental United States. Sealed (sealable) containers used for air consigments are distinct and separable from the means of conveyance carrying them before any transloading in the continental United States. Sealed (sealable) containers used for air consignments after transloading in the continental United States or for overland consignments in the continental United States may either be distinct and separable from the means of conveyance carrying them, or be the means of conveyance itself.

Soil. The loose surface material of the earth in which plants grow, in most cases consisting of disintegrated rock with an admixture of organic material and soluble salts.

State. Any of the several States of the United States, the Commonwealth of the Northern Mariana Islands, the Commonwealth of Puerto Rico, the District of Columbia, Guam, the Virgin Islands of the United States, or any other territory or possession of the United States.

Transit permit. A written authorization issued by the Administrator for the movement of fruits and vegetables en route to a foreign destination that are otherwise prohibited movement by this subpart into the continental United States. Transit permits authorize one or more consignments over a designated period of time.

Transloading. The transfer of cargo from one sealable container to another,

from one means of conveyance to another, or from a sealable container directly into a means of conveyance.

United States. All of the States.

§ 318.13–3 General requirements for all regulated articles.

All regulated articles that are allowed movement under this subpart must be moved in accordance with the following requirements, except as specifically provided otherwise in this subpart.

(a) *Freedom from plant debris.* All regulated articles moved under this subpart must be free from plant debris.

(b) *Certification.* Certification may be issued for the movement of regulated articles under the following conditions:

(1) *Certification on basis of inspection or nature of lot involved.* Regulated articles may be certified when they have been inspected by an inspector and found apparently free from infestation and infection, or without such inspection when the inspector determines that the lot for consignment is of such a nature that no danger of infestation or infection is involved.

(i) Persons intending to move any articles that may be certified must contact the local Plant Protection and Quarantine office as far as possible in advance of the contemplated date of shipment in order to request an inspection.

(ii) Persons intending to move any articles that may be certified must prepare, handle, and safeguard such articles from infestation or reinfestation, and assemble them at such points as the inspector may designate, placing them so that inspection may be readily made.

(2) *Certification on basis of treatment.* (i) Regulated articles for which treatments are approved in part 305 of this chapter may be certified if such treatments have been applied in accordance with part 305 of this chapter and if the articles were handled after such treatment in accordance with a compliance agreement executed by the applicant for certification or under the supervision of an inspector.

(ii) Regulated articles certified after treatment in accordance with part 305 of this chapter that are taken aboard any ship, vessel, other surface craft, or aircraft must be segregated and protected in a manner as required by the inspector.

(c) *Limited permits.* (1) Limited permits [1] may be issued by an inspector for the movement of certain noncertified regulated articles to restricted destinations.

(2) Limited permits may be issued by an inspector for the movement of regulated articles that would otherwise be prohibited movement under this subpart, if the articles are to be moved in accordance with § 318.13–6.

(3) Except when the regulations specify that an inspector must issue the limited permit, limited permits may be issued by a person operating under a compliance agreement.

(d) *Compliance agreements.* As a condition for the movement of regulated articles for which a compliance agreement is required, the person entering the compliance agreement must agree to the following:

(1) That he or she will use any permit or certification issued to him or her in accordance with the provisions in the permit, the requirements in this subpart, and the compliance agreement;

(2) That he or she will maintain at his or her establishment such safeguards against the establishment and spread of infestation and infection and comply with such conditions as to the maintenance of identity, handling (including post-treatment handling), and interstate movement of regulated articles and the cleaning and treatment of means of conveyance and containers used in such movement of the articles, as may be required by the inspector in each specific case to prevent the spread of infestation or infection; and

(3) That he or she will allow inspectors to inspect the establishment and its operations.

(e) *Attachment of limited permit or verification of certification.* Except as otherwise provided for certain air cargo and containerized cargo on ships moved in accordance with § 318.13–10, each box, bale, crate, or other container of regulated articles moved under certification or limited permit shall have the limited permit attached to the outside of the container or bear a U.S. Department of Agriculture stamp or inspection sticker verifying that the consignment has been certified in accordance with paragraph (b) of this section: *Provided*, That if a limited permit or certification is issued for a consignment of more than one container or for bulk products, certification shall be stamped on or the limited permit shall be attached to the accompanying waybill, manifest, or bill of lading.

(f) *Withdrawal of certification, transit permits, limited permits, or compliance agreements.* Any certification, transit permit, limited permit, or compliance agreement which has been issued or authorized may be withdrawn by an inspector orally or in writing, if such inspector determines that the holder thereof has not complied with all conditions under the regulations for the use of such document. If the cancellation is oral, the decision and the reasons for the withdrawal shall be confirmed in writing as promptly as circumstances allow. Any person whose certification, transit permit, limited permit, or compliance agreement has been withdrawn may appeal the decision in writing to the Administrator within 10 days after receiving the written notification of the withdrawal. The appeal shall state all of the facts and reasons upon which the person relies to show that the certification, transit permit, limited permit, or compliance agreement was wrongfully withdrawn. The Administrator shall grant or deny the appeal, in writing, stating the reasons for such decision, as promptly as circumstances allow. If there is a conflict as to any material fact, a hearing shall be held to resolve such conflict. Rules of practice concerning such a hearing will be adopted by the Administrator.

(g) *Container marking and identity.* Except as provided in § 318.13–6(c), consignments of regulated articles moved in accordance with this subpart must have the following information clearly marked on each container or on the waybill, manifest, or bill of lading accompanying the articles: Nature and quantity of contents; name and address of shipper, owner, or person shipping or forwarding the articles; name and address of consignee; shipper's identifying mark and number; and the certification stamp or number of the limited permit authorizing movement, if one was issued.

(h) *Refusal of movement.* An inspector may refuse to allow the interstate movement of a regulated article if the inspector finds that the regulated article is prohibited, is not accompanied by required documentation, is so infested with a plant pest or noxious weed that, in the judgment of the inspector, it cannot be cleaned or treated, or contains soil or other prohibited contaminants.

(i) *Costs and charges.* Services of the inspector during regularly assigned hours of duty at the usual places of duty shall be furnished without cost to the one requesting such services. APHIS will not assume responsibility for any costs or charges, other than those indicated in this section, in connection with the inspection, treatment, conditioning, storage, forwarding, or any other operation of any character incidental to the physical movement of regulated articles or plant pests.

(j) *APHIS not responsible for damage.* APHIS assumes no responsibility for any damage to regulated articles that

[1] Limited permits can be obtained from each State or territory's local Plant Protection and Quarantine office.

results from the application of treatment or other measures required under this subpart (or under part 305 of this chapter) to protect against the dissemination of plant pests within the United States.

(Approved by the Office of Management and Budget under control number 0579–0346)

§ 318.13–4 Approval of certain fruits and vegetables for interstate movement.

(a) *Determination by the Administrator.* The Administrator has determined that the application of one or more of the designated phytosanitary measures cited in paragraph (b) of this section to certain fruits and vegetables mitigates the risk posed by those commodities, and that such articles may be moved interstate subject to one or more of those measures, as provided in paragraphs (c) and (d) of this section. The name and origin of all fruits and vegetables authorized movement under this section, as well as the applicable requirements for their movement, may be found on the Internet at *http://www.aphis.usda.gov/import_export/plants/manuals/ports/downloads/hawaii.pdf* or *http://www.aphis.usda.gov/import_export/plants/manuals/ports/downloads/puerto_rico.pdf.* Fruits or vegetables that require phytosanitary measures other than one or more of the designated phytosanitary measures cited in paragraph (b) of this section may only be moved in accordance with applicable requirements in § 318.13–3 and regulated article-specific requirements contained elsewhere in this subpart.

(b) *Designated phytosanitary measures.* (1) The fruits and vegetables are inspected in the State of origin or in the first State of arrival.

(2) The fruits and vegetables originated from a pest-free area in the State of origin and the grower from which the fruit or vegetable originated has entered into a compliance agreement with the Administrator.

(3) The fruits and vegetables are treated in accordance with part 305 of this chapter and the treatment is certified by an inspector.

(4) The fruits and vegetables articles are inspected and certified in the State of origin by an inspector and have been found free of one or more specific quarantine pests identified by risk analysis as likely to follow the pathway.

(5) The fruits and vegetables are moved as commercial consignments only.

(6) The fruits and vegetables may be distributed only within a defined area and the boxes or containers in which the fruit or vegetables are distributed must be marked to indicate the applicable distribution restrictions.

(c) *Fruits and vegetables authorized for interstate movement under this section.*

(1) *Previously approved fruits and vegetables.* Fruits and vegetables that were authorized movement under this subpart either administratively or by specific regulation as of February 17, 2009 and that were subject only to one or more of the designated phytosanitary measures cited in paragraph (b) of this section and the general requirements of § 318.13–3 may continue to be moved interstate under the same requirements that applied before February 17, 2009, except as provided in paragraph (d) of this section. The interstate movement conditions for those fruits and vegetables that were authorized movement under this subpart subject to additional measures beyond the designated measures in paragraph (b) of this section can be found in § 318.13–16 or one of the commodity-specific sections in this subpart.

(2) *Other fruits and vegetables.* Fruits and vegetables that do not meet the criteria in paragraph (c)(1) of this section may be authorized movement under this section as follows:

(i) *Pest risk analysis.* The risk posed by the particular article from a specified State has been evaluated and publicly communicated as follows:

(A) *Availability of pest risk analysis.* APHIS published in the **Federal Register**, for a public comment period of 60 days, a notice announcing the availability of a pest risk analysis that evaluated the risks associated with the movement of the particular fruit or vegetable.

(B) *Determination of risk; factors considered.* The Administrator determined, and announced in the notice referred to in the previous paragraph, that, based on the information available, the application of one or more of the designated phytosanitary measures described in paragraph (b) of this section is sufficient to mitigate the risk that plant pests or noxious weeds could be introduced into or disseminated elsewhere within the United States by the fruit or vegetable. In order for the Administrator to make the determination described in this paragraph, he or she must conclude based on the information presented in the risk analysis for the fruit or vegetable that the risk posed by each quarantine pest associated with the fruit or vegetable in the State of origin is mitigated by one or more of the following factors:

(*1*) *Inspection.* A quarantine pest is associated with the fruit or vegetable in the State of origin, but the pest can be easily detected via inspection in the State of origin or in the State of first arrival;

(*2*) *Pest freedom.* No quarantine pests are known to be associated with the fruit or vegetable in the State of origin, or a quarantine pest is associated with the fruit or vegetable in the State of origin but the fruit or vegetable originates from an area that meets the requirements of § 318.13–5 for pest freedom;

(*3*) *Effectiveness of treatment.* A quarantine pest is associated with the fruit or vegetable in the State of origin, but the risk posed by the pest can be reduced by applying an approved post-harvest treatment to the fruit or vegetable;

(*4*) *Predeparture inspection.* A quarantine pest is associated with the fruit or vegetable in the State of origin, but the fruit or vegetable is subject to predeparture inspection;

(*5*) *Commercial consignments.* A quarantine pest is associated with the fruit or vegetable in the State of origin, but the risk posed by the pest can be reduced by commercial practices.

(*6*) *Limited distribution.* A quarantine pest is associated with the fruit or vegetable in the State of origin, but the risk posed by the pest can be reduced by limiting distribution of the fruit or vegetable and labeling boxes containing the fruit or vegetable with those distribution instructions.

(ii) *Administrator's decision.* The Administrator will announce his or her decision in a subsequent **Federal Register** notice. If appropriate, APHIS would begin allowing the interstate movement of the fruits or vegetables subject to requirements specified in the notice because:

(A) No comments were received on the pest risk analysis;

(B) The comments on the pest risk analysis revealed that no changes to the pest risk analysis were necessary; or

(C) Changes to the pest risk analysis were made in response to public comments, but the changes did not affect the overall conclusions of the analysis and the Administrator's determination of risk.

(d) *Amendment of interstate movement requirements.* If, after February 17, 2009, the Administrator determines that one or more of the designated phytosanitary measures is not sufficient to mitigate the risk posed by any fruit or vegetable authorized interstate movement under this section, APHIS will prohibit or further restrict the interstate movement of the fruit or vegetable pending resolution of the situation. If APHIS concludes that a

permanent change to the interstate movement requirements of a particular fruit or vegetable is necessary, APHIS will also publish a notice in the **Federal Register** advising the public of its finding. The notice will specify the amended interstate movement requirements, provide an effective date for the change, and invite public comment on the subject.

(Approved by the Office of Management and Budget under control number 0579–0346)

§ 318.13–5 Pest-free areas.

Certain fruits or vegetables may be moved interstate provided that the fruits or vegetables originate from an area that is free of a specific pest or pests. In some cases, fruits or vegetables may only be moved interstate if the area of origin is free of all plant pests that attack the fruits or vegetables. In other cases, fruits or vegetables may be moved interstate if the area of origin is free of one or more plant pests that attack the fruit or vegetable and the risk posed by the remaining plant pests that attack the fruit or vegetable is mitigated by other specific phytosanitary measures contained in the regulations in this subpart.

(a) *Application of standards for pest-free areas.* APHIS will make a determination of an area's pest-free status based on information provided by the State. The information used to make this determination will include trapping and surveillance data, survey protocols, and protocols for actions to be performed upon detection of a pest.

(b) *Survey protocols.* APHIS must approve the survey protocol used to determine and maintain pest-free status, as well as protocols for actions to be performed upon detection of a pest. Pest-free areas are subject to audit by APHIS to verify their status.

(c) *Determination of pest freedom.* (1) For an area to be considered free of a specified pest for the purposes of this subpart, the Administrator must determine, and announce in a notice published in the **Federal Register** for a public comment period of 60 days, that the area meets the criteria of paragraphs (a) and (b) of this section.

(2) The Administrator will announce his or her decision in a subsequent **Federal Register** notice. If appropriate, APHIS will allow movement of the regulated article from a pest-free area because:

(i) No comments were received on the notice or

(ii) The comments on the notice did not affect the overall conclusions of the notice and the Administrator's determination of risk.

(d) *Decertification of pest-free areas; reinstatement.* If a pest is detected in an area that is designated as free of that pest, APHIS will publish in the **Federal Register** a notice announcing that the pest-free status of the area in question has been withdrawn and that interstate movement of host crops for the pest in question is subject to application of an approved treatment for the pest. If a treatment for the pest is not available, interstate movement of the host crops would be prohibited. In order for a decertified pest-free area to be reinstated, it would have to meet the criteria of paragraphs (a) through (c) of this section.

(e) *General requirements for the interstate movement of regulated articles from pest-free areas.*

(1) *Labeling.* Each box of fruits or vegetables that is moved interstate from a pest-free area under this subpart must be clearly labeled with:

(i) The name of the orchard or grove of origin, or the name of the grower; and

(ii) The name of the municipality and State or territory in which the fruits or vegetables were produced; and

(iii) The type and amount of fruits or vegetables the box contains.

(2) *Compliance agreement.* Persons wishing to move fruits or vegetables from a pest-free area in Hawaii, Puerto Rico, Guam, the Commonwealth of the Northern Mariana Islands, or the U.S. Virgin Islands must enter into a compliance agreement with APHIS in accordance with § 318.13–3(d).

(3) *Safeguarding.* If fruits or vegetables are moved from a pest-free area into or through an area that is not free of that pest, the fruits or vegetables must be safeguarded during the time they are present in a non-pest-free area by being covered with insect-proof mesh screens or plastic tarpaulins, including while in transit to the packinghouse and while awaiting packaging. If fruits or vegetables are moved through an area that is not free of that pest during transit to a port, they must be packed in insect-proof cartons or containers or be covered by insect-proof mesh or plastic tarpaulins during transit to the port and subsequent movement into or through the United States. These safeguards described in this section must remain intact until the fruits or vegetables reach their final destination.

(Approved by the Office of Management and Budget under control number 0579–0346)

§ 318.13–6 Transit of fruits and vegetables from Hawaii or the territories into or through the continental United States.

Fruits and vegetables from Hawaii, Puerto Rico, Guam, the Commonwealth of the Northern Mariana Islands, or the U.S. Virgin Islands that are otherwise prohibited interstate movement into the continental United States by this subpart may transit the continental United States en route to a foreign destination when moved in accordance with this section.

(a) *Transit permit.* (1) A transit permit is required for the arrival, unloading, and movement through the continental United States of fruits and vegetables otherwise prohibited by this subpart from being moved through the continental United States from Hawaii, Puerto Rico, Guam, the Commonwealth of the Northern Mariana Islands, or the U.S. Virgin Islands. Application for a transit permit may be made in writing or with PPQ Form 586.[2] The transit permit application must include the following information:

(i) The specific types of fruits and vegetables to be shipped (only scientific or English common names are acceptable);

(ii) The means of conveyance to be used to transport the fruit or vegetable through the continental United States;

(iii) The port of arrival in the continental United States, and the location of any subsequent stop;

(iv) The location of, and the time needed for, any storage in the continental United States;

(v) Any location in the continental United States where the fruits or vegetables are to be transloaded;

(vi) The means of conveyance to be used for transporting the fruits or vegetables from the port of arrival in the continental United States to the port of export;

(vii) The estimated time necessary to accomplish exportation, from arrival at the port of arrival in the continental United States to exit at the port of export;

(viii) The port of export; and

(ix) The name and address of the applicant and, if the applicant's address is not within the territorial limits of the continental United States, the name and address in the continental United States of an agent whom the applicant names for acceptance of service of process.

(2) A transit permit will be issued only if the following conditions are met:

(i) APHIS inspectors are available at the port of arrival, port of export, and any locations at which transloading of cargo will take place and, in the case of

[2] PPQ Form 586 can be obtained from PPQ Permit Services or at *http://www.aphis.usda.gov/plant_health/permits/transit.shtml* . Applications for transit permits should be submitted to USDA, APHIS, PPQ Permit Services, 4700 River Road Unit 136, Riverdale, MD 20737 or through e-permits *http://www.aphis.usda.gov/permits/learn_epermits.shtml.*

air consignments, at any interim stop in the continental United States, as indicated on the application for the transit permit;

(ii) The application indicates that the proposed movement would comply with the provisions in this section applicable to the transit permit; and

(iii) During the 12 months prior to receipt of the application by APHIS, the applicant has not had a transit permit withdrawn under § 318.13–3(f), unless the transit permit has been reinstated upon appeal.

(b) *Limited permit.* Fruits or vegetables shipped from Hawaii, Puerto Rico, Guam, the Commonwealth of the Northern Mariana Islands, or the U.S. Virgin Islands through the continental United States under this section must be accompanied by a limited permit, a copy of which must be presented to an inspector at the port of arrival and the port of export in the continental United States, and at any other location in the continental United States where an air consignment is authorized to stop or where overland consignments change means of conveyance. An inspector will issue a limited permit if the following conditions are met:

(1) The inspector determines that the specific type and quantity of the fruits or vegetables being shipped are accurately described by accompanying documentation, such as the accompanying manifest, waybill, and bill of lading. (Only scientific or English common names are acceptable.) The fruits or vegetables shall be assembled at whatever point and in whatever manner the inspector designates as necessary to comply with the requirements of this section; and

(2) The inspector establishes that the consignment of fruits or vegetables has been prepared in compliance with the provisions of this section.

(c) *Marking requirements.* Each of the smallest units, including each of the smallest bags, crates, or cartons, containing regulated articles for transit through the continental United States under this section must be conspicuously marked, prior to the locking and sealing of the container in the State of origin, with a printed label that includes a description of the specific type and quantity of the fruits or vegetables (only scientific or English common names are acceptable), the transit permit number under which the regulated articles are to be shipped, and, in English, the State in which they were grown and the statement ''Distribution in the United States is Prohibited.''

(d) *Handling of fruits and vegetables.* Fruits or vegetables shipped through the United States from Hawaii, Puerto Rico, Guam, the Commonwealth of the Northern Mariana Islands, or the U.S. Virgin Islands in accordance with this section may not be commingled in the same sealed container with fruits or vegetables that are intended for entry and distribution in the United States. The fruits or vegetables must be kept in sealed containers from the time the limited permit required by paragraph (b) of this section is issued, until the fruits or vegetables exit the United States, except as otherwise provided in the regulations in this section. Transloading must be carried out in accordance with the requirements of paragraphs (a), (h), and (i) of this section.

(e) *Area of movement.* The port of arrival, the port of export, ports for air stops, and overland movement within the continental United States of fruits or vegetables shipped under this section is limited to a corridor that includes all States of the continental United States except Alabama, Arizona, California, Florida, Georgia, Kentucky, Louisiana, Mississippi, Nevada, New Mexico, North Carolina, South Carolina, Tennessee, Texas, and Virginia, except that movement is allowed through Dallas/Fort Worth, TX, as an authorized stop for air cargo, or as a transloading location for consignments that arrive by air but that are subsequently transloaded into trucks for overland movement from Dallas/Fort Worth, TX, into the designated corridor by the shortest route. Movement through the United States must begin and end at locations staffed by APHIS inspectors.

(f) *Movement of regulated articles.* Transportation through the continental United States shall be by the most direct route to the final destination of the consignment in the country to which it is exported, as determined by APHIS based on commercial shipping routes and timetables and set forth in the transit permit. No change in the quantity of the original consignment from that described in the limited permit is allowed. No remarking is allowed. No diversion or delay of the consignment from the itinerary described in the transit permit and limited permit is allowed unless authorized by an APHIS inspector upon determination by the inspector that the change will not significantly increase the risk of plant pests or diseases in the United States, and unless each port to which the consignment is diverted is staffed by APHIS inspectors.

(g) *Notification in case of emergency.* In the case of an emergency such as an accident, a mechanical breakdown of the means of conveyance, or an unavoidable deviation from the prescribed route, the person in charge of the means of conveyance must, as soon as practicable, notify the APHIS office at the port where the cargo arrived in the United States.

(h) *Consignments by sea.* Except as authorized by this paragraph, consignments arriving in the United States by sea from Hawaii, Puerto Rico, Guam, the Commonwealth of the Northern Mariana Islands, or the U.S. Virgin Islands may be transloaded once from a ship to another ship or, alternatively, once to a truck or railcar at the port of arrival and once from a truck or railcar to a ship at the port of export, and must remain in the original sealed container, except under extenuating circumstances and when authorized by an inspector upon determination by the inspector that the transloading would not significantly increase the risk of the introduction of plant pests or diseases into the United States, and provided that APHIS inspectors are available to provide supervision. No other transloading of the consignment is allowed, except under extenuating circumstances (*e.g.* , equipment breakdown) and when authorized by an inspector upon determination by the inspector that the transloading would not significantly increase the risk of the introduction of plant pests or diseases into the continental United States, and provided that APHIS inspectors are available to provide supervision.

(i) *Consignments by air.* (1) Consignments arriving in the United States by air from Hawaii, Puerto Rico, Guam, the Commonwealth of the Northern Mariana Islands, or the U.S. Virgin Islands may be transloaded only once in the United States. Transloading of air consignments must be carried out in the presence of an APHIS inspector. Consignments arriving by air that are transloaded may be transloaded either into another aircraft or into a truck trailer for export by the most direct route to the final destination of the consignment through the designated corridor set forth in paragraph (e) of this section. This may be done at either the port of arrival in the United States or at the second air stop within the designated corridor, as authorized in the transit permit and as provided in paragraph (i)(2) of this section. No other transloading of the consignment is allowed, except under extenuating circumstances (*e.g.*, equipment breakdown) and when authorized by an APHIS inspector upon determination by the inspector that the transloading would not significantly increase the risk of the introduction of plant pests or diseases into the United States, and provided that APHIS inspectors are

available to provide supervision. Transloading of air consignments will be authorized only if the following conditions are met:

(i) The transloading is done into sealable containers;

(ii) The transloading is carried out within the secure area of the airport (*i.e.*, that area of the airport that is open only to personnel authorized by the airport security authorities);

(iii) The area used for any storage is within the secure area of the airport; and

(iv) APHIS inspectors are available to provide the supervision required by paragraph (i)(1) of this section.

(2) Except as authorized by paragraph (f) of this section, consignments that continue by air from the port of arrival in the continental United States may be authorized by APHIS for only one additional stop in the continental United States, provided the second stop is within the designated corridor set forth in paragraph (e) of this section and is staffed by APHIS inspectors. As an alternative to transloading a consignment arriving in the United States into another aircraft, consignments that arrive by air may be transloaded into a truck trailer for export by the most direct route to the final destination of the consignment through the designated corridor set forth in paragraph (e) of this section. This may be done at either the port of arrival in the United States or at the second authorized air stop within the designated corridor. No other transloading of the consignment is allowed, except under extenuating circumstances (*e.g.*, equipment breakdown) and when authorized by an APHIS inspector upon determination by the inspector that the transloading would not significantly increase the risk of the introduction of plant pests or diseases into the United States, and provided that APHIS inspectors are available to provide supervision.

(j) *Duration and location of storage.* Any storage in the United States of fruits or vegetables shipped under this section must be for a duration and in a location authorized in the transit permit required by paragraph (a) of this section. Areas where such fruits or vegetables are stored must be either locked or guarded at all times the fruits and vegetables are present. Cargo shipped under this section must be kept in a sealed container while stored in the continental United States.

(k) *Temperature requirement.* Except for time spent on aircraft and except during storage and transloading of air consignments, the temperature in the sealed containers containing fruits and vegetables moved under this section must be 60 °F or lower from the time the regulated articles leave Hawaii, Puerto Rico, Guam, the Commonwealth of the Northern Mariana Islands, the U.S. Virgin Islands, or any other territory or possession of the United States until they exit the United States.

(l) *Prohibited materials.* (1) The person in charge of or in possession of a sealed container used for movement into or through the United States under this section must ensure that the sealed container is carrying only those fruits or vegetables authorized by the transit permit required under paragraph (a) of this section; and

(2) The person in charge of or in possession of any means of conveyance or container returned to the United States without being reloaded after being used to export fruits or vegetables from the United States under this section must ensure that the means of conveyance or container is free of materials prohibited importation into the United States under this chapter.

(m) Authorization by APHIS of the movement of fruits or vegetables through the United States under this section does not imply that such fruits or vegetables are enterable into the destination country. Consignments returned to the United States from the destination country shall be subject to all applicable regulations, including ''Subpart—Fruits and Vegetables'' of part 319 and ''Plant Quarantine Safeguard Regulations'' of part 352 of this chapter.

(n) Any restrictions and requirements with respect to the arrival, temporary stay, unloading, transloading, transiting, exportation, or other movement or possession in the United States of any fruits or vegetables under this section shall apply to any person who brings into, maintains, unloads, transloads, transports, exports, or otherwise moves or possesses in the United States such fruits or vegetables, whether or not that person is the one who was required to have a transit permit or limited permit for the fruits or vegetables or is a subsequent custodian of the fruits or vegetables. Failure to comply with all applicable restrictions and requirements under this section by such a person shall be deemed to be a violation of this section.

(Approved by the Office of Management and Budget under control number 0579–0346)

§ 318.13–7 Products as ships' stores or in the possession of passengers or crew.

(a) *In the possession of passengers or crew members.* Small quantities of fruits, vegetables, or cut flowers subject to the quarantine and regulations in this subpart, when loose and free of packing materials, may be taken aboard any ship, vessel, or other surface craft by passengers or members of the crew without inspection and certification in the State of origin. However, if such articles are not eligible for certification under § 318.13–3, they must be entirely consumed or disposed of before arrival within the territorial waters of the continental United States, Hawaii, Puerto Rico, Guam, the Commonwealth of the Northern Mariana Islands, or the U.S. Virgin Islands.

(b) *As ships' stores or decorations.* Fruits, vegetables, or cut flowers subject to the quarantine and regulations in this subpart may be taken aboard a ship, vessel, or other surface craft in Hawaii, Puerto Rico, Guam, the Commonwealth of the Northern Mariana Islands, or the U.S. Virgin Islands without inspection or certification. Fruits, vegetables, and cut flowers that are so taken aboard such a carrier must be either:

(1) Entirely consumed or removed from the ship, vessel, or other surface craft before arrival within the territorial waters of the continental United States, Hawaii, Puerto Rico, Guam, the Commonwealth of the Northern Mariana Islands, the U.S. Virgin Islands, or any other territory or possession of the United States; or

(2) In the case of a surface carrier, retained aboard such carrier under seal or otherwise disposed of subject to safeguards equivalent to those imposed on other prohibited or restricted products by paragraphs (b) and (c) of § 352.10 of this chapter.

§ 318.13–8 Articles and persons subject to inspection.

In addition to the inspection requirements in §§ 318.13–9 and 318.13–10, persons, means of conveyance (including ships, other oceangoing craft, and aircraft), baggage, cargo, and any other articles, that are destined for movement, are moving, or have been moved from Hawaii, Puerto Rico, Guam, the Commonwealth of the Northern Mariana Islands, or the U.S. Virgin Islands to a destination elsewhere in the United States are subject to agricultural inspection at the port of departure, the port of arrival, or any other authorized port. If an inspector finds any article prohibited movement by the quarantine and regulations of this subpart, he or she, taking the least drastic action, shall order the return of the article to the place of origin, or the exportation of the article, under safeguards satisfactory to him or her, or otherwise dispose of it, in whole or part, to comply with the

quarantine and regulations of this subpart.

§ 318.13–9 Inspection and disinfection of means of conveyance.

(a) *Inspection of aircraft prior to departure.* No person shall move any aircraft from Hawaii, Puerto Rico, Guam, the Commonwealth of the Northern Mariana Islands, or the U.S. Virgin Islands to any other State unless the person moving the aircraft has contacted an inspector and offered the inspector the opportunity to inspect the aircraft prior to departure and the inspector has informed the person proposing to move the aircraft that the aircraft may depart.

(b) *Inspection of aircraft moving to Guam.* Any person who has moved an aircraft from Hawaii, Puerto Rico, the Commonwealth of the Northern Mariana Islands, or the U.S. Virgin Islands to Guam shall contact an inspector and offer the inspector the opportunity to inspect the aircraft upon the aircraft's arrival in Guam.

(c) *Inspection of ships upon arrival.* Any person who has moved a ship or other oceangoing craft from Hawaii, Puerto Rico, Guam, the Commonwealth of the Northern Mariana Islands, or the U.S. Virgin Islands to any other State shall contact an inspector and offer the inspector the opportunity to inspect the ship or other oceangoing craft upon its arrival.

(d) *Disinfection of means of conveyance.* If an inspector finds that a means of conveyance is infested with or contains plant pests, and the inspector orders disinfection of the means of conveyance, then the person in charge or in possession of the means of conveyance shall disinfect the means of conveyance and its cargo in accordance with an approved method contained in part 305 of this chapter under the supervision of an inspector and in a manner prescribed by the inspector, prior to any movement of the means of conveyance or its cargo.

§ 318.13–10 Inspection of baggage, other personal effects, and cargo.

(a) *Offer for inspection by aircraft passengers.* Passengers destined for movement by aircraft from Hawaii, Puerto Rico, Guam, the Commonwealth of the Northern Mariana Islands, or the U.S. Virgin Islands to any other State shall offer their carry-on baggage and other personal effects for inspection at the place marked for agricultural inspections, which will be located at the airport security checkpoint or the aircraft boarding gate, at the time they pass through the checkpoint or the gate. Passengers shall offer their check-in baggage for inspection at agricultural inspection stations prior to submitting their baggage to the check-in baggage facility. When an inspector has inspected and passed such baggage or personal effects, he or she shall apply a U.S. Department of Agriculture stamp, inspection sticker, or other identification to such baggage or personal effects to indicate that such baggage or personal effects have been inspected and passed as required. Passengers shall disclose any fruits, vegetables, plants, plant products, or other articles that are requested to be disclosed by the inspector. When an inspection of a passenger's baggage or personal effects discloses an article in violation of the regulations in this part, the inspector shall seize the article. The passenger shall state his or her name and address to the inspector, and provide the inspector with corroborative identification. The inspector shall record the name and address of the passenger, the nature of the identification presented for corroboration, the nature of the violation, the types of articles involved, and the date, time, and place of the violation.

(b) *Offer for inspection by aircraft crew.* Aircraft crew members destined for movement by aircraft from Hawaii, Puerto Rico, Guam, the Commonwealth of the Northern Mariana Islands, or the U.S. Virgin Islands to any other State, shall offer their baggage and personal effects for inspection at the inspection station designated for the employing airline not less than 20 minutes prior to the scheduled departure time of the aircraft or the rescheduled departure time as posted in the public areas of the airport. When an inspector has inspected and passed such baggage or personal effects, he or she shall apply a U.S. Department of Agriculture stamp, inspection sticker, or other identification to the baggage or personal effects to indicate that such baggage or personal effects have been inspected and passed as required. Aircraft crew members shall disclose any fruits, vegetables, plants, plant products, or other articles that are requested to be disclosed by the inspector. When an inspection of a crew member's baggage or personal effects discloses an article in violation of the regulations in this part, the inspector shall seize the article. The crew member shall state his or her name and address to the inspector, and provide the inspector with corroborative identification. The inspector shall record the name and address of the crew member, the nature of the identification presented for corroboration, the nature of the violation, the types of articles involved, and the date, time, and place of the violation.

(c) *Baggage inspection for persons traveling to Guam on aircraft.* No person who has moved from Hawaii, Puerto Rico, or the U.S. Virgin Islands to Guam on an aircraft shall remove or attempt to remove any baggage or other personal effects from the area secured for customs inspections before the person has offered to an inspector, and has had passed by the inspector, his or her baggage and other personal effects. Persons shall disclose any fruits, vegetables, plants, plant products, or other articles that are requested to be disclosed by the inspector. When an inspection of a person's baggage or personal effects discloses an article in violation of the regulations in this part, the inspector shall seize the article. The person shall state his or her name and address to the inspector, and provide the inspector with corroborative identification. The inspector shall record the name and address of the person, the nature of the identification presented for corroboration, the nature of the violation, the types of articles involved, and the date, time, and place of the violation.

(d) *Baggage acceptance and loading on aircraft.* No person shall accept or load any check-in aircraft baggage destined for movement from Hawaii, Puerto Rico, Guam, the Commonwealth of the Northern Mariana Islands, or the U.S. Virgin Islands to any other State unless the baggage bears a U.S. Department of Agriculture stamp, inspection sticker, or other indication applied by an inspector representing that the baggage has been inspected and certified.

(e) *Offer for inspection by persons moving by ship.* No person who has moved on any ship or other oceangoing craft from Hawaii, Puerto Rico, Guam, the Commonwealth of the Northern Mariana Islands, or the U.S. Virgin Islands to any other territory, State, or District of the United States, shall remove or attempt to remove any baggage or other personal effects from the designated inspection area as provided in paragraph (h) of this section on or off the ship or other oceangoing craft unless the person has offered to an inspector for inspection, and has had passed by the inspector, the baggage and other personal effects. Persons shall disclose any fruits, vegetables, plants, plant products, or other articles that are requested to be disclosed by the inspector. When an inspection of a person's baggage or personal effects discloses an article in violation of the regulations in this part, the inspector

shall seize the article. The person shall state his or her name and address to the inspector, and provide the inspector with corroborative identification. The inspector shall record the name and address of the person, the nature of the identification presented for corroboration, the nature of the violation, the types of articles involved, and the date, time, and place of the violation.

(f) *Loading of certain cargoes.* (1) Except as otherwise provided in paragraph (f)(2) of this section, no person shall present to any common carrier or contract carrier for movement, and no common carrier or contract carrier shall load, any cargo containing fruits, vegetables, or other articles regulated under this subpart that are destined for movement from Hawaii, Puerto Rico, Guam, or the U.S. Virgin Islands to any other State unless the cargo has been offered for inspection, passed by an inspector, and bears a U.S. Department of Agriculture stamp or inspection sticker, or unless a limited permit is attached to the cargo as specified in § 318.13–3(e).

(2) Cargo designated may be loaded without a U.S. Department of Agriculture stamp or inspection sticker attached to the cargo or a limited permit attached to the cargo if the cargo is moved:

(i) As containerized cargo on ships or other oceangoing craft or as air cargo;

(ii) The carrier has on file documentary evidence that a valid limited permit was issued for the movement or that the cargo was certified; and

(iii) A notation of the existence of these documents is made by the carrier on the waybill, manifest, or bill of lading that accompanies the consignment.

(3) Cargo moved in accordance with § 318.13–6(b) that does not have a limited permit attached to the cargo must have a limited permit attached to the waybill, manifest, or bill of lading accompanying the consignment.

(g) R*emoval of certain cargoes in Guam.* No person shall remove or attempt to remove from a designated inspection area as provided in paragraph (h) of this section, on or off the means of conveyance, any cargo moved from Hawaii, Puerto Rico, the Commonwealth of the Northern Mariana Islands, or the U.S. Virgin Islands to Guam containing fruits, vegetables, or other articles regulated under this subpart, unless the cargo has been inspected and passed by an inspector in Guam.

(h) *Space and facilities for baggage and cargo inspection.* Baggage and cargo inspection will not be performed until the person in charge or possession of the ship, other oceangoing craft, or aircraft provides space and facilities on the means of conveyance, pier, or airport that are adequate, in the inspector's judgment, for the performance of inspection.

§ 318.13–11 Posting of warning notice and distribution of baggage declarations.

(a) Before any aircraft or any ship, vessel, or other surface craft moving to Guam, the Commonwealth of Northern Mariana Islands, or American Samoa from Hawaii or any other territory or possession of the United States arrives in Guam, the Commonwealth of Northern Mariana Islands, or American Samoa, a baggage declaration, to be furnished by the U.S. Department of Agriculture, calling attention to the provisions of the Plant Protection Act and the quarantine and regulations in this subpart, must be distributed to each adult passenger. These baggage declarations shall be executed and signed by the passengers and shall be collected and delivered by the master or other responsible officer of the aircraft, ship, vessel, or other surface craft to the inspector on arrival at the quarantine or inspection area.

(b) Every person owning or controlling any dock, harbor, or landing field in Hawaii, Puerto Rico, Guam, the Commonwealth of Northern Mariana Islands, or the U.S. Virgin Islands from which ships, vessels, other surface craft, or aircraft leave for ports in any other State shall post, and keep posted at all times, in one or more conspicuous places in passenger waiting rooms on or in said dock, harbor, or landing field a warning notice directing attention to the quarantine and regulations in this subpart. Every master, or other responsible officer of any ship, vessel, other surface craft, or aircraft leaving Hawaii, Puerto Rico, Guam, the Commonwealth of the Northern Mariana Islands, or the U.S. Virgin Islands destined to a port in any other State, shall similarly post, and keep posted at all times, such a warning notice in the ship, vessel, other surface craft, or aircraft under his charge.

§ 318.13–12 Movement by the U.S. Department of Agriculture.

Notwithstanding any other restrictions of this subpart, regulated articles may be moved if they are moved by the U.S. Department of Agriculture for experimental or scientific purposes and are moved under conditions found by the Administrator to be adequate to prevent the spread of plant pests and diseases.

§ 318.13–13 Movement of frozen fruits and vegetables.

Frozen fruits and vegetables may be certified for movement from Hawaii, Puerto Rico, Guam, the Commonwealth of the Northern Mariana Islands, or the U.S. Virgin Islands, into or through any other territory, State, or District of the United States in accordance with § 318.13–3. Such fruits and vegetables must be held at a temperature not higher than 20 °F during shipping and upon arrival in the continental United States, and in accordance with the requirements for the interstate movement of frozen fruits and vegetables in part 305 of this chapter. Paragraph (b) of § 305.17 lists frozen fruits and vegetables for which quick freezing is not an authorized treatment.

§ 318.13–14 Movement of processed fruits, vegetables, and other products.

(a) Fruits, vegetables, and other products that are processed sufficiently as to preclude the survival of any live pests can be moved interstate from Hawaii, Puerto Rico, the U.S. Virgin Islands, Guam, and the Commonwealth of the Northern Mariana Islands. Those processed products which are approved for interstate movement from those States can be found in the fruits and vegetables manuals for those States. These manuals are available on the Internet at *http://www.aphis.usda.gov/import_export/plants/manuals/ports/downloads/hawaii.pdf* and *http://www.aphis.usda.gov/import_export/plants/manuals/ports/downloads/puerto_rico.pdf*.

(b) Consignments of processed fruits, vegetables, or other products that have not been processed sufficiently as to be incapable of harboring fruit flies are subject to the interstate movement requirements which apply to the fruit, vegetable, or other product in its unprocessed state.

§ 318.13–15 Parcel post inspection.

Inspectors are authorized to inspect, with the cooperation of the U.S. Postal Service, parcel post packages placed in the mails in Hawaii, Puerto Rico, Guam, the Commonwealth of the Northern Mariana Islands, or the U.S. Virgin Islands to determine whether such packages contain products whose movement is not authorized under this subpart, to examine any such products that are found for insect infestation, and to notify the postmaster in writing of any violations of this subpart that are found as a result of an inspection.

§ 318.13–16 Regulated articles allowed interstate movement subject to specified conditions.

(a) The following regulated articles may be moved interstate in accordance with § 318.13–3 and any additional requirements specified in paragraph (b) of this section.

State, territory, or district of origin	Common name	Botanical name	Plant part(s)	Additional requirements
Hawaii	Bananas [1]	*Musa* spp	Fruit	(b)(1)(i), (b)(2)(ii)
	Pot marigold, johnny-jump-ups, pansies, and violets.	*Calendula* spp	Flower	(b)(2)(iii)
	Pineapple [2]	*Ananas comosus*	Fruit	(b)(2)(i)
Puerto Rico	Cactus	*Cactaceae*	Whole plant	(b)(2)(iv), (b)(3)(ii)
	Okra	*Abelmoschus escuelentus*	Fruit	(b)(3)(i)
	Pot marigold, johnny-jump-ups, pansies, and violets.	*Calendula* spp	Flower	(b)(2)(iii)
U.S. Virgin Islands	Cactus	*Cactaceae*	Whole plant	(b)(2)(iv), (b)(3)(ii)
	Okra	*Abelmoschus escuelentus*	Fruit	(b)(3)(i)
	Pot marigold, johnny-jump-ups, pansies, and violets.	*Calendula* spp	Flower	(b)(2)(iii)

[1] Fruit may also be moved interstate in accordance with § 318.13–17.
[2] Fruit may also be moved interstate with treatment in accordance with part 305 of this chapter.

(b) Additional restrictions for applicable regulated articles as specified in paragraph (a) of this section.

(1) *Restricted movement and distribution.*

(i) Allowed movement into Alaska. Cartons must be labeled, ''For distribution in Alaska only.''

(ii) [Reserved]

(2) *Plant types.*

(i) Smooth cayenne variety and hybrids with 50 percent or more smooth cayenne parentage only.

(ii) Green bananas of the cultivars ''Williams,'' ''Valery,'' ''Grand Nain,'' and standard and dwarf ''Brazilian'' only.

(iii) Inflorescences only with no stems or leaves attached.

(iv) Bare-rooted plants or plants rooted in approved growing media only.

(3) *Other conditions.*

(i) If destined to States other than Alabama, Arizona, Arkansas, California, Florida, Georgia, Illinois, Kentucky, Louisiana, Mississippi, Missouri, Nevada, New Mexico, North Carolina, Oklahoma, South Carolina, Tennessee, Texas, or Virginia, the consignment must be treated in accordance with part 305 of this chapter unless the consignment is for immediate consumption or processing.

(ii) Must be treated in accordance with part 305 of this chapter.

§ 318.13–17 Regulated articles from Guam.

(a)(1) Regulated articles, other than soil, may be moved from Guam into or through any other State only if they meet the strictest plant quarantine requirements under part 319 of this chapter for similar articles offered for entry into such States from the countries of East and Southeast Asia, including Cambodia, India, Japan, Korea, Laos, the northeastern provinces of Manchuria, the Philippines, Taiwan, and Vietnam, or the islands of the Central and South Pacific, including Micronesia, Melanesia, and Polynesia, as well as Australia, New Zealand, and the Malay Archipelago, except requirements for permits, phytosanitary certificates, notices of arrival, and notices of consignment from port of arrival. Soil must meet the requirements of § 330.300 of this chapter.

(2) Regulated articles that do not meet the requirements of paragraph (a)(1) of this section are prohibited movement from Guam into or through any other State.

(b)(1) Regulated articles moved from Guam into or through any other State shall be subject to inspection at the port of first arrival in another part of the United States to determine whether they are free of plant pests and otherwise meet the requirements applicable to them under this subpart, and shall be subject to release, in accordance with § 330.105(a) of this chapter as if they were foreign arrivals. Such articles shall be released only if they meet all applicable requirements under this subpart.

(2) A release shall be issued in writing unless the inspection involves small quantities of regulated articles, in which case a release may be issued orally by the inspector.

§§ 318.13–18 through 318.13–20 [Reserved]

§ 318.13–21 Avocados from Hawaii to Alaska.

Avocados may be moved interstate from Hawaii to Alaska without treatment only under the following conditions:

(a) *Distribution and marking requirements.* The avocados may be moved interstate for distribution in Alaska only, the boxes of avocados must be clearly marked with the statement ''Distribution limited to the State of Alaska'' and the consignment must be identified in accordance with the requirements of § 318.13–3.

(b) *Commercial consignments.* The avocados may be moved in commercial consignments only.

(c) *Packing requirements.* The avocados must have been sealed in the packinghouse in Hawaii in boxes with a seal that will break if the box is opened.

(d) *Ports.* The avocados may enter the continental United States only at the following ports: Portland, OR; Seattle, WA; or any port in Alaska.

(e) *Shipping requirements.* The avocados must be moved either by air or ship and in a sealed container. The avocados may not be commingled in the same sealed container with articles that are intended for entry and distribution in any State other than Alaska. If the avocados arrive at either Portland, OR, or Seattle, WA, they may be transloaded only under the following conditions:

(1) *Consignments by sea.* The avocados may be transloaded from one ship to another ship at the port of arrival, provided they remain in the

original sealed container and that APHIS inspectors supervise the transloading. If the avocados are stored before reloading, they must be kept in the original sealed container and must be in an area that is either locked or guarded at all times the avocados are present.

(2) *Consignments by air.* The avocados may be transloaded from one aircraft to another aircraft at the port of arrival, provided the following conditions are met:

(i) The transloading is done into sealable containers;

(ii) The transloading is carried out within the secure area of the airport (*i.e.*, that area of the airport that is open only to personnel authorized by the airport security authorities);

(iii) The area used for any storage of the consignment is within the secure area of the airport, and is either locked or guarded at all times the avocados are present. The avocados must be kept in a sealed container while stored in the continental United States en route to Alaska; and

(iv) APHIS inspectors supervise the transloading.

(3) *Exceptions.* No transloading other than that described in paragraphs (e)(1) and (e)(2) of this section is allowed except under extenuating circumstances (such as equipment breakdown) and when authorized and supervised by an APHIS inspector.

(f) *Limited permit.* Consignments of avocados must be accompanied by a limited permit issued by an APHIS inspector in accordance with § 318.13–3(c). The limited permit will be issued only if the inspector examines the consignment and determines that the consignment has been prepared in compliance with the provisions of this section.

§ 318.13–22 Bananas from Hawaii.

(a) Green bananas (*Musa* spp.) of the cultivars ''Williams,'' ''Valery,'' ''Grand Nain,'' and standard and dwarf ''Brazilian'' may be moved interstate from Hawaii with certification in accordance with § 318.13–3 if the bananas meet the following conditions:[3]

(1) The bananas must be picked while green and packed for shipment within 24 hours after harvest. If the green bananas will be stored overnight during that 24-hour period, they must be stored in a facility that prevents access by fruit flies;

(2) No bananas from bunches containing prematurely ripe fingers (*i.e.*, individual yellow bananas in a cluster of otherwise green bananas) may be harvested or packed for shipment;

(3) The bananas must be inspected by an inspector and found free of plant pests as well as any of the following defects: Prematurely ripe fingers, fused fingers, or exposed flesh (not including fresh cuts made during the packing process); and

(4) To safeguard from fruit fly infestation, the bananas must be covered with insect-proof packaging, such as insect-proof mesh screens or plastic tarpaulins, from the time that they are packaged for shipment until they reach the port of arrival on the mainland United States.

(b) Bananas of any cultivar or ripeness that do not meet the conditions of paragraph (a) of this section may also be moved interstate from Hawaii in accordance with the following conditions:

(1) The bananas are irradiated at the minimum dose listed in § 305.31(a) of this chapter and in accordance with the other requirements in § 305.34 of this chapter for the Mediterranean fruit fly (*Ceratitis capitata*), the melon fruit fly (*Bactrocera curcurbitae*), the Oriental fruit fly (*Bactrocera dorsalis*), and the green scale (*Coccus viridis*) and are inspected, after removal from the stalk, in Hawaii and found to be free of the banana moth (*Opogona sacchari* (Bojen)) by an inspector before or after undergoing irradiation treatment; or

(2) The bananas are irradiated at the minimum dose listed in § 305.31(a) of this chapter and in accordance with the other requirements in § 305.34 of this chapter for the Mediterranean fruit fly (*Ceratitis capitata*), the melon fruit fly (*Bactrocera curcurbitae*), and the Oriental fruit fly (*Bactrocera dorsalis*) and are inspected, after removal from the stalk, in Hawaii and found to be free of the green scale (*Coccus viridis*) and the banana moth (*Opogona sacchari* (Bojen)) before or after undergoing irradiation treatment.

(3) Untreated bananas from Hawaii may be moved interstate for treatment on the mainland United States under a limited permit issued by an inspector. To be eligible for a limited permit under this paragraph, bananas from Hawaii must be inspected prior to interstate movement from Hawaii and found free of banana moth if they are to be treated in accordance with the requirements of paragraph (b)(1) of this section or inspected and found free of banana moth and green scale if they are to be treated in accordance with the requirements of paragraph (b)(2) of this section.

§ 318.13–23 Cut flowers from Hawaii.

(a) Except for cut blooms and leis of mauna loa and jade vine and except for cut blooms of gardenia not grown in accordance with paragraph (b) of this section, cut flowers may be moved interstate from Hawaii under limited permit, to a destination specified in the permit, directly from an establishment operated in accordance with the terms of a compliance agreement executed by the operator of the establishment, if the articles have not been exposed to infestation and they are not accompanied by any articles prohibited interstate movement under this subpart.

(b) Cut blooms of gardenia may be moved interstate from Hawaii if grown and inspected in accordance with the provisions of this section.[4]

(1) The grower's production area must be inspected annually by an inspector and found free of green scale. If green scale is found during an inspection, a 2-month ban will be placed on the interstate movement of cut blooms of gardenia from that production area. Near the end of the 2 months, an inspector will reinspect the grower's production area to determine whether green scale is present. If reinspection determines that the production area is free of green scale, shipping may resume. If reinspection determines that green scale is still present in the production area, another 2-month ban on shipping will be placed on the interstate movement of gardenia from that production area. Each ban will be followed by reinspection in the manner specified, and the production area must be found free of green scale prior to interstate movement.

(2) The grower must establish a buffer area surrounding gardenia production areas. The buffer area must extend 20 feet from the edge of the production area. Within the buffer area, the growing of gardenias and the following green scale host plants is prohibited: Ixora, ginger (*Alpinia purpurata*), plumeria, coffee, rambutan, litchi, guava, citrus, anthurium, avocado, banana, cocoa, macadamia, celery, *Pluchea indica,* mango, orchids, and annona.

(3) An inspector must visually inspect the cut blooms of gardenias in each consignment prior to interstate movement from Hawaii to the mainland United States. If the inspector does not detect green scale in the consignment, the inspector will certify the consignment in accordance with § 318.13–3(b). If the inspector finds green scale in a consignment, that

[3] Bananas from Hawaii may also be moved to Alaska under § 318.13–16.

[4] Cut blooms of gardenia are also eligible for interstate movement with treatment in accordance with part 305 of this chapter.

consignment will be ineligible for interstate movement from Hawaii.

(Approved by the Office of Management and Budget under control number 0579–0198)

§ 318.13–24 Sweet potatoes from Puerto Rico.

Sweet potatoes from Puerto Rico may be moved interstate to Atlantic Coast ports north of and including Baltimore, MD, under limited permit if treated in accordance with part 305 of this chapter or if the following conditions are met:

(a) The sweet potatoes must be certified by an inspector of Puerto Rico as having been grown under the following conditions:

(1) Fields in which the sweet potatoes have been grown must have been given a preplanting treatment with an APHIS-approved soil insecticide.

(2) Before planting in such treated fields, the sweet potato draws and vine cuttings must have been dipped in an APHIS-approved insecticidal solution.

(3) During the growing season an approved insecticide must have been applied to the vines at prescribed intervals.

(b) An inspector of Puerto Rico must certify that the sweet potatoes have been washed.

(c) The sweet potatoes must be graded by inspectors of Puerto Rico in accordance with Puerto Rican standards which do not provide a tolerance for insect infestation or evidence of insect injury and found by such inspectors to comply with such standards prior to movement from Puerto Rico.

(d) The sweet potatoes must be inspected by an inspector and found to be free of the sweet potato scarabee (*Euscepes postfasciatus Fairm.*).

§ 318.13–25 Sweet potatoes from Hawaii.

(a) Sweet potatoes may be moved interstate from Hawaii in accordance with this section only if the following conditions are met: [5]

(1) The sweet potatoes must be treated in accordance with the vapor heat treatment schedule specified in § 305.24.

(2) The sweet potatoes must be sampled, cut, and inspected and found to be free of the ginger weevil (*Elytrotreinus subtruncatus*). Sampling, cutting, and inspection must be performed under conditions that will prevent any pests that may emerge from the sampled sweet potatoes from infesting any other sweet potatoes intended for interstate movement in accordance with this section.

(3) The sweet potatoes must be inspected and found to be free of the gray pineapple mealybug (*Dysmicoccus neobrevipes*) and the Kona coffee-root knot nematode (*Meloidogyne konaensis*).

(4)(i) Sweet potatoes that are treated in Hawaii must be packaged in the following manner:

(A) The cartons must have no openings that will allow the entry of fruit flies and must be sealed with seals that will visually indicate if the cartons have been opened. They may be constructed of any material that prevents the entry of fruit flies and prevents oviposition by fruit flies into the fruit in the carton.[6]

(B) The pallet-load of cartons must be wrapped before it leaves the treatment facility in one of the following ways:

(*1*) With polyethylene sheet wrap;

(*2*) With net wrapping; or

(*3*) With strapping so that each carton on an outside row of the pallet load is constrained by a metal or plastic strap.

(C) Packaging must be labeled with treatment lot numbers, packing and treatment facility identification and location, and dates of packing and treatment.

(ii) Cartons of untreated sweet potatoes that are moving to the mainland United States for treatment must be shipped in shipping containers sealed prior to interstate movement with seals that will visually indicate if the shipping containers have been opened.

(5)(i) *Certification on basis of treatment.* Certification shall be issued by an inspector for the movement of sweet potatoes from Hawaii that have been treated in accordance with part 305 of this chapter and handled in Hawaii in accordance with this section.

(ii) *Limited permit.* A limited permit shall be issued by an inspector for the interstate movement of untreated sweetpotato from Hawaii for treatment on the mainland United States in accordance with this section.

(b) [*Reserved*]

(Approved by the Office of Management and Budget under control number 0579–0281)

Subpart—Fruits and Vegetables From Puerto Rico or Virgin Islands [Removed]

■ 7. Subpart—Fruits and Vegetables From Puerto Rico or Virgin Islands, consisting of §§ 318.58 through 318.58–16, is removed.

Subpart—Guam [Removed]

■ 8. Subpart—Guam, consisting of §§ 318.82 through 318.82–3, is removed.

Done in Washington, DC, this 9th day of January 2009.

Kevin Shea,

Acting Administrator, Animal and Plant Health Inspection Service.

[FR Doc. E9–762 Filed 1–15–09; 8:45 am]

BILLING CODE 3410–34–P

[5] Sweet potatoes may also be moved interstate from Hawaii with irradiation in accordance with § 305.34 of this chapter or after fumigation with methyl bromide according to treatment schedule T–101–b–3–1, as provided for in § 305.6(a) of this chapter.

[6] If there is a question as to the adequacy of a carton, send a request for approval of the carton, together with a sample carton, to the Animal and Plant Health Inspection Service, Plant Protection and Quarantine, Center for Plant Health Science and Technology, 1730 Varsity Drive, Suite 400, Raleigh, NC 27606.

DEPARTMENT OF AGRICULTURE

Natural Resources Conservation Service

7 CFR Part 636

RIN 0578–AA49

Wildlife Habitat Incentive Program

AGENCY: Natural Resources Conservation Service, United States Department of Agriculture.

ACTION: Interim final rule with request for comment.

SUMMARY: Section 2602 of the Food, Conservation, and Energy Act of 2008 (2008 Act) amended the Wildlife Habitat Incentive Program (WHIP) by: Narrowing the program's applicability to private agricultural lands, nonindustrial private forestland, and Indian land; identifying habitat on pivot corners and irregular areas as ''other types of wildlife habitat'' eligible for cost-share; increasing, from 15 to 25, the percentage of funds that may be used for agreements that have a term of at least 15 years; providing the Secretary of the United States Department of Agriculture (USDA) authority to give priority to projects that would address issues raised by State, regional, and national conservation initiatives; and instituting an annual $50,000 in direct or indirect aggregate payment limitations per person or legal entity. The Natural Resources Conservation Service (NRCS), an agency of USDA, issues this interim final rule with request for comment to incorporate statutory changes resulting from the 2008 Act authorization. The Agency is also using this rule to simplify the regulation and make administrative changes to improve program efficiency. Cost-share agreements entered into on or following January 16, 2009 will be administered according to this interim final rule.

DATES: *Effective date:* The rule is effective January 16, 2009. *Comment date:* Submit comments on or before March 17, 2009.

ADDRESSES: You may send comments, which will be published in their entirety, using any of the following methods:

Government-wide rulemaking Web site: Go to *http://www.regulations.gov* and follow the instructions for sending comments electronically.

Mail: Financial Assistance Programs Division, Natural Resources Conservation Service, Wildlife Habitat Incentive Program Comments, P.O. Box 2890, Room 5237–S, Washington, DC 20013.

Fax: 1–202–720–4265.

Hand Delivery: Room 5237–S of the USDA South Agriculture Building, 1400 Independence Avenue, SW., Washington, DC 20250, between 9 a.m. and 4 p.m., Monday through Friday, except Federal holidays. Please ask the guard at the entrance to the South Agriculture Building to call 202–720–4527 in order to be escorted into the building.

FOR FURTHER INFORMATION CONTACT: Director, Financial Assistance Programs Division, Natural Resources Conservation Service, P.O. Box 2890, Washington, DC 20013–2890. Phone: 202–720–1844. Fax: 202–720–4265. Persons with disabilities who require alternative means for communicating (Braille, large print, audiotape, etc.) should contact the USDA Target Center at 202–720–2600 (voice and TDD).

SUPPLEMENTARY INFORMATION:

Regulatory Certifications

Executive Order 12866

Pursuant to Executive Order 12866, this interim final rule with request for comment is a significant regulatory action. The administrative record is available for public inspection in Room 5831 South Building, USDA, 14th and Independence Avenue, SW., Washington, DC. NRCS conducted an economic analysis of the potential impacts associated with this program. A summary of the economic analysis can be found at the end of this preamble and a copy of the analysis is available upon request from the Director, Financial Assistance Programs Division, Natural Resources Conservation Service, Room 5237S, Washington, DC 20250–2890.

Small Business Regulatory Enforcement Fairness Act of 1996 (SBREFA)

Section 2904(c) of the Food, Conservation, and Energy Act of 2008 requires that the Secretary use the authority in section 808(2) of title 5, United States Code, which allows an agency to forego SBREFA's usual 60-day Congressional Review delay of the effective date of a major regulation if the agency finds that there is a good cause to do so. NRCS hereby determines that it has good cause to do so in order to meet the Congressional intent to have the conservation programs, authorized or amended by Title II, in effect as soon as possible. Accordingly, this rule is effective upon filing for public inspection by the Office of the Federal Register.

Executive Order 13175

Executive Order 13175 requires agencies to consult and collaborate with tribes, if policies or actions have substantial direct effects on tribes. NRCS has determined that this regulation does not have a substantial direct effect on tribes, since these regulatory provisions are required by statute, and these provisions do not impose unreimbursed compliance costs or preempt Tribal law. As a result, consultation is not required.

Executive Order 13084

Executive Order 13084 requires agencies to consult with Indian Tribal governments, if the policies uniquely impact tribes. NRCS has determined that the policies set forth in this regulation are required by statute and do not uniquely impact tribes and Tribal governments; therefore, consultation is not required.

Regulatory Flexibility Act

NRCS has determined that the Regulatory Flexibility Act is not applicable to this final rule because the Natural Resources Conservation Service is not required by 5 U.S.C. 553,ww. or any other provision of law, to publish a notice of proposed rulemaking with respect to the subject matter of this rule.

Environmental Analysis

Availability of the Environmental Assessment (EA) and Finding of No Significant Impact (FONSI). A programmatic environmental assessment has been prepared in association with this rulemaking. The analysis has determined that there will not be a significant impact to the human environment and as a result an Environmental Impact Statement is not required to be prepared (40 CFR 1508.13). The EA and FONSI are available for review and comment for 60 days from the date of publication of this interim final rule in the **Federal Register**. A copy of the EA and FONSI may be obtained from the following Web site: *http://www.nrcs.usda.gov/programs/Env_Assess/*. A hard copy may also be requested from the following address and contact: National Environmental Coordinator, Natural Resources Conservation Service, Ecological Sciences Division, 1400 Independence Ave., SW., Washington DC 20250. Comments from the public should be specific and reference that comments provided are on the EA and FONSI. Public comment may be submitted by any of the following means: (1) e-mail comments to *NEPA2008@wdc.usda.gov,* (2) e-mail to egov Web site—*www.regulations.gov,* or (3) written comments to: National Environmental Coordinator, Natural Resources Conservation Service, Ecological Sciences Division, 1400 Independence Ave., SW., Washington DC 20250.

Civil Rights Impact Analysis

NRCS has determined through a Civil Rights Impact Analysis that the interim final rule discloses no disproportionately adverse impacts for minorities, women, or persons with disabilities. An increased cost-share payment rate for historically underserved producers, as defined in § 636.3, is expected to increase participation among these groups. The data presented indicates producers who are members of the historically underserved groups have participated in NRCS conservation programs at parity with other producers. Extrapolating from historical participation data, it is reasonable to conclude that NRCS programs, including WHIP, will continue to be administered in a non-discriminatory manner. Outreach and communication strategies are in place to ensure all producers will be provided the same information to allow them to make informed compliance decisions regarding the use of their lands that will affect their participation in USDA programs. WHIP applies to all persons equally regardless of their race, color, national origin, gender, sex, or disability status. Therefore, the WHIP rule portends no adverse civil rights implications for women, minorities and persons with disabilities.

Paperwork Reduction Act

Section 2904 of the 2008 Act requires that implementation of programs under Title II of the Act be made without regard to the Paperwork Reduction Act of 1995 (44 U.S.C. 3501 *et seq.*). Therefore, NRCS is not reporting recordkeeping or estimated paperwork burden associated with this interim final rule.

Government Paperwork Elimination Act

NRCS is committed to compliance with the Government Paperwork Elimination Act, which requires Government agencies, in general, to

provide the public the option of submitting information or transacting business electronically to the maximum extent possible. To better accommodate public access, NRCS has developed an online application and information system for public use.

Executive Order 12988

This interim final rule has been reviewed in accordance with Executive Order 12988. The provisions of this interim final rule are not retroactive. Furthermore, the provisions of this interim final rule preempt State and local laws to the extent such laws are inconsistent with this interim final rule. Before an action may be brought in a Federal court of competent jurisdiction, the administrative appeal rights afforded persons at 7 CFR Part 614 must be exhausted.

Unfunded Mandates Reform Act of 1995

NRCS assessed the affects of this rulemaking action on State, local, and Tribal governments, and the public. This action does not compel the expenditure of $100 million or more by any State, local, or Tribal governments, or anyone in the private sector, and therefore, a statement under section 202 of the Unfunded Mandates Reform Act of 1995 is not required.

Economic Analysis—Executive Summary

The Wildlife Habitat Incentives Program (WHIP) provides direct technical and financial assistance to improve fish and wildlife habitat on eligible agricultural and nonindustrial private forest lands. The focus of the program is on national, regional, and State-directed fish and wildlife priorities, including rare and declining species. These priorities are established with input from the regional, State, and local stakeholders. Because these efforts involve both on-site and off-site-specific impacts and these impacts affect a host of non-market valued attributes ecosystem services, performing a traditional benefit-cost analysis (BCA) is challenging. Even with these limitations, a BCA offers a means to identify the main costs and benefits and explore policy and program alternatives.

The primary costs associated with WHIP include the cost-share outlays by NRCS and the matching funds of the producer to fully pay for the restoration and improvements in fish and wildlife habitat within the agricultural or forestry operation. These primary costs must then be compared with the benefits of the habitat improvement realized through these efforts, mainly the improvements of the flow of ecological goods and services (EGS) and provision of non-market valued amenities, such as more scenic views, as well as providing fish and wildlife habitat.

The results of this BCA suggest that the WHIP assistance to participants will result in positive net benefits, especially in areas where fish and wildlife habitat is deteriorating or being lost. The changes to WHIP made by the 2008 Act do not change this conclusion. Copies of the Economic Analysis may be obtained from the Director, Financial Assistance Programs Division, Natural Resources Conservation Service, P.O. Box 2890, Washington, DC 20013–2890.

Section 2904 of the Food, Conservation, and Energy Act of 2008

The Commodity Credit Corporation (CCC) is not required by 5 U.S.C. 553 or by any other provision of law, to publish a notice of proposed rulemaking with respect to the subject matter of this rule. Section 2904 of the 2008 Act requires regulations to be published within 90 days after the date of enactment and authorizes the CCC to promulgate an interim final rule effective upon publication with an opportunity for notice and comment. CCC has determined that an interim final rule is necessary to expedite the effective date of rulemaking in order to meet the intent of Section 2904.

Discussion of Program

The Wildlife Habitat Incentive Program (WHIP) is a voluntary program administered by NRCS, using the funds and authorities of the Commodity Credit Corporation (CCC). WHIP is available in all 50 states, Puerto Rico, Guam, the Virgin Islands of the United States, American Samoa, and the Commonwealth of the Northern Mariana Islands. Through WHIP, NRCS provides technical and financial assistance to participants to develop upland, wetland and aquatic wildlife habitat, as well as fish and wildlife habitat on other areas, and to develop habitat for threatened and endangered species. NRCS first allocated funds for WHIP in 1997. Over the life of the program, NRCS has entered into over 25,600 cost-share agreements that cover over 4 million acres.

WHIP was originally authorized under section 387 of the Federal Agriculture Improvement and Reform Act of 1996 (the 1996 Act), Public Law 104–127. In 1997, NRCS published regulations to implement WHIP at 7 CFR 636. Section 2502 of the Farm Security and Rural Investment Act of 2002 (the 2002 Act), Public Law 107–171, repealed the original WHIP statute and established a new WHIP under Section 1240N of the Food Security Act of 1985, as amended (the 1985 Act). Section 2602 of the Food, Conservation, and Energy Act of 2008 (2008 Act) made further changes to WHIP.

In 1997, NRCS published regulations to implement WHIP at 7 CFR Part 636. The 2002 Act authorized WHIP agreements with a duration of at least 15 years, and NRCS amended the 1997 regulation, by incorporating this change in a final rule published on July 24, 2002. NRCS publishes this interim final rule to incorporate the changes in the 2008 Act. In addition, NRCS is using this rulemaking opportunity to implement program improvements based upon NRCS's experience in administering WHIP and other conservation programs, as well as input from program participants and stakeholders.

In addition, the United States Department of Agriculture (USDA) held Farm Bill forums throughout the country in 2005 to solicit input from producers and other stakeholders about future farm policy. USDA received more than 4,000 comments through this process, including recommendations related to WHIP. In summary, NRCS makes changes to the WHIP regulation through this interim final rule, described more fully below, to reflect changes made by the 2008 Act, consideration of public input from the Farm Bill forums, and opportunities identified by NRCS to improve program administration.

Summary of Statutory Changes

Section 2602(a)—Program Focus

The original WHIP legislation, published in 1996, contained broad language to promote implementation of wildlife habitat development practices by providing participants cost-share assistance for developing a wildlife management plan and implementing eligible activities under the plan. Prior to the 2008 Act, WHIP was available to develop habitat on private and public lands, and available to landowners and operators, provided that operators gave NRCS evidence they had control of the land for the duration of the WHIP agreement.

NRCS focused the majority of WHIP funds on private lands. However, the NRCS State Conservationist, in consultation with the State Technical Committee, could allow exceptions to the private land focus when significant wildlife habitat gains could only be achieved by installing practices on non-Federal public land. In addition, Indian land, formerly known as Tribal lands,

regardless of their status in terms of Federal trust lands, and Federal lands were eligible in those very limited circumstances where the benefit is primarily on the private lands, but must include some Federal land to meet the WHIP objective.

Section 2602(a) of the 2008 Act amends Section 1240N(a) of the 1985 Act to restrict eligible land to private agricultural land, nonindustrial private forest land, and Indian land. This restriction requires NRCS to make changes to the applicability, definitions, and program requirement sections of the WHIP regulation. In particular, this rulemaking adds definitions for ''agricultural lands,'' ''Indian land,'' and ''nonindustrial private forest land.'' These terms are defined in § 636.3 of this regulation.

NRCS also amends § 636.1(a) to reflect the changes made to land eligibility by the 2008 Act. In § 636.4, NRCS redesignates the existing § 636.4(b) as § 636.4(c), and adds a new § 636.4(b) to identify eligible land as private agricultural land, nonindustrial private forest land, and Indian land.

Section 2602(b) of the 2008 Act—Other Types of Wildlife Habitat

Section 2602(b) of the 2008 Act amends Section 1240N(b) of the 1985 Act to clarify ''other types of habitat'' includes habitat developed on pivot corners and irregular areas. The current regulation encompasses these types of habitats, and therefore, NRCS determined that it did not need to amend the WHIP rule to reflect this statutory clarification. NRCS will ensure that its policy guidance identifies such habitat as eligible for enrollment.

2008 Act Section 2602(c)—Cost-Share Rates

The original WHIP legislation, published in 1996, did not specify either a cost-share rate or an agreement length for WHIP cost-share agreements. However, NRCS, in its 1997 final rule, specified that NRCS would not pay more than 75 percent of the cost of establishing wildlife habitat development practices, except in the case of long-term agreements. Further, NRCS reduced the cost-share payment to a participant proportionately below 75 percent to the extent that direct Federal financial assistance was provided to the participant from other sources. The 1997 WHIP rule also specified that WHIP cost-share agreements would be for a period of 5 to 10 years, unless a shorter period was recommended to address situations where wildlife was threatened as a result of a disaster.

The 2002 Act authorized the Secretary to use up to 15 percent of program funds to provide additional cost-share payments to participants to protect and restore essential plant and animal habitat under long-term agreements with durations of at least 15 years. The 2002 final rule reflected the new authority for entering into long-term agreements while the percentage of funds to be made available for such agreements was addressed in Agency policy. Section 2602(c) of the 2008 Act increases the proportion of annual funds available for long-term agreements to not more than 25 percent but makes no other changes to long-term agreements. In response to Section 2602(c), NRCS adds the provision to allow up to 25 percent of WHIP funds to be used to carry out cost-share agreements that extend 15 years or more.

Section 2602(d) of the 2008 Act—Priority Initiatives

Section 2602(d) provides the Secretary discretionary authority to give priority to projects that would address issues raised by State, regional, and national conservation initiatives. These State, regional, and national initiatives include, for example: the North American Waterfowl Management Plan, the National Fish Habitat Action Plan, the Greater Sage Grouse Conservation Society, the State Comprehensive Wildlife Conservation Strategies (also referred to as the State Wildlife Action Plans), the Northern Bobwhite Conservation Initiative, the Gulf of Hypoxia Action Plan 2008 (and associated annual operating plans), and State forest resource strategies. This change clarifies discretionary authority provided in the program's original statutory language. Section 636.5(c)(1) of the 1997 WHIP rule identified criteria that NRCS used to evaluate applications and make enrollment decisions, including ''Contribution to resolving an identified habitat problem of national, regional, or state importance.'' Section 636.5 is redesignated as § 636.6 and in response to the 2008 Act, NRCS revises § 636.6(c)(1) to read as follows: ''Contribution to resolving an identified habitat concern of national, regional, or state importance.'' In particular, NRCS replaces the word ''problem'' with the word ''concern'' to reflect a broader spectrum of wildlife issues. Further, in § 636.6(a), NRCS replaces the term ''national and regional needs'' with ''national, regional, and State wildlife habitat concerns.'' Finally, in § 636.8(a)(2), NRCS states that ''wildlife habitat concerns identified in State, regional, and national conservation initiatives'' are one of the possible items required to be addressed in the WHIP plan of operations (WPO).

Section 2602(e) of the 2008 Act—Payment Limitations

Section 2602(e) of the 2008 Act establishes the following payment limitation: ''Payments made to a person or legal entity, directly or indirectly, under [WHIP] may not exceed, in the aggregate, $50,000 per year.'' NRCS incorporates this change in § 636.7(f).

Summary of Changes to the Regulation

In addition to the amendments being made to address 2008 Act changes, NRCS amends the WHIP regulations at 7 CFR Part 636 through this interim final rule to incorporate administrative changes to simplify the regulatory language, align WHIP policies with other NRCS conservation programs, and improve the efficiency of program administration. NRCS describes these changes below in the section-by-section analysis.

Section 636.1, Applicability

NRCS amends § 636.1(a) by making several changes. In particular, NRCS replaces the phrase ''for upland wildlife, wetland wildlife, threatened and endangered species, fish, and other types of wildlife'' with the phrase ''develop fish and wildlife habitat on private agricultural land, nonindustrial private forest land, and Indian land.'' NRCS determined that the simplified language provides the appropriate broad interpretation for the types of habitat to be developed on eligible lands, including a new statutory requirement to encourage the development of habitat for native and managed pollinators.

Section 636.2, Administration

NRCS makes several adjustments to § 636.2 to help clarify program administration. In particular, NRCS adds the following statement to § 636.2(a) to clarify the relationship between NRCS and the Commodity Credit Corporation (CCC): ''The funds, facilities, and authorities of the Commodity Credit Corporation (CCC) are available to NRCS to carry out WHIP. Accordingly, where NRCS is mentioned in this part, it also refers to CCC's funds, facilities, and authorities, where applicable.'' NRCS has had legal authority to use CCC funds to implement WHIP since the 2002 Act. By adding this language to the WHIP rule, NRCS identifies that it may use CCC funds to deliver WHIP.

NRCS makes several changes to § 636.2(c) to align WHIP terminology with the terms used by other NRCS financial assistance programs. In

particular, NRCS replaces the term ''cooperative agreements'' with the term ''agreements'' to reflect the full scope of funding arrangements into which NRCS may enter. The change does not alter the authority or opportunities for entering into agreements.

NRCS also adds ''Indian tribes,'' ''private organizations,'' and ''individuals'' to the list of entities with which NRCS may enter into agreements. NRCS merges § 636.2(d) with § 636.2(c) to simplify and clarify the WHIP regulation, eliminating redundant language. Therefore, NRCS redesignates §§ 636.2(e) and (f) as §§ 636.2(d) and (e), respectively. NRCS removes the subjective term ''reasonable'' in the redesignated § 636.2(d), and revises redesignated paragraph § 636.2(e) to clarify that the Chief can override decisions made by his delegates if necessary to uphold WHIP purposes.

Section 636.3, Definitions

NRCS changes many of the definitions in the WHIP rule to be consistent with other NRCS conservation programs and to avoid confusion among NRCS field personnel and customers. Specifically, NRCS revises the following existing definitions for ''Chief,'' ''Conservation district,'' ''Cost share agreement,'' ''Participant,'' ''Person,'' ''State Conservationist,'' and ''Wildlife.''

NRCS adds the following terms and definitions to the WHIP regulation to be consistent with related NRCS conservation programs. In particular, NRCS adds definitions for ''Agricultural lands,'' ''Applicant,'' ''At-risk species,'' ''Beginning farmer or rancher,'' ''Conservation practice,'' ''Designated conservationist,'' ''Field office technical guide (FOTG),'' ''Historically underserved producer,'' ''Indian tribe,'' ''Indian land,'' ''Joint operation,'' ''Legal entity,'' ''Lifespan,'' ''Limited resource farmer or rancher,'' ''Liquidated damages,'' ''Livestock,'' ''Natural Resources Conservation Service (NRCS),'' ''Nonindustrial private forestland,'' ''Operation and maintenance,'' ''Operation and maintenance (O&M) agreement,'' ''Producer,'' ''Resource concern,'' ''Secretary,'' ''Socially disadvantaged farmer or rancher,'' ''Technical assistance,'' and ''Technical service provider (TSP).'' Specifically, NRCS requests public comment on how to tailor the current definition of ''at-risk species'' to assist species in greatest need. As currently defined, ''at risk species means any plant or animal species as determined by the State Conservationist, with advice from the State Technical Committee, to need direct intervention to halt its population decline.'' NRCS removes the terms ''Conservation Plan'' and ''Recurring Practice'' since these terms are not used in the WHIP regulation.

NRCS revises several existing terms to clarify WHIP program purposes. In particular, NRCS revises the definition of ''Cost-share payment'' to be more comprehensive by including the language ''other goals consistent with the program.'' NRCS revises the definition of ''Habitat development'' to clarify that ''conservation practices'' are undertaken to establish, improve, protect, enhance, or restore land to improve conditions for wildlife. NRCS replaces the term ''Practice'' with ''Conservation practice'' and defines the term consistent with the definition used in related NRCS conservation programs. NRCS adds the definitions of ''Historically underserved producer'' to reference applicants who may be eligible for additional cost-share assistance as described in § 636.7(a)(2) as a beginning farmer or rancher, a limited resource farmer or rancher, or a socially disadvantaged farmer or rancher. Correspondingly, definitions are added for ''Beginning farmer or rancher,'' ''Limited resource farmer or rancher,'' and ''Socially disadvantaged farmer or rancher.'' The gross farm sales criterion in the ''Limited resource farmer or rancher'' definition is updated to reflect the adjustment for inflation. These definitions for are consistent with the changes to definitions in other NRCS conservation programs.

Finally, NRCS replaces the term ''Wildlife habitat development plan'' with the term ''WHIP plan of operations (WPO)'' in § 636.7, and consequently adds ''WPO'' to § 636.3. This change further aligns § 636.3 with the definitions in related NRCS conservation programs that identify a plan of operations rather than a development plan. NRCS replaces the terms ''wildlife habitat development plan'' and ''WHDP'' to ''WHIP plan of operations'' and ''WPO,'' respectively throughout the entire regulation.

Section 636.4, Program Requirements

NRCS amends § 636.4 to clarify some of the existing program requirements that have not been identified in the WHIP regulation because they apply through other statutory requirements. However, NRCS finds that reference to these requirements in the WHIP regulation is important so that prospective participants are aware of them. In particular, NRCS revises § 636.4(a) to clarify that WHIP participants are subject to the highly erodible and wetland conservation provisions found at 7 CFR Part 12. Additionally, NRCS includes reference to the Adjusted Gross Income (AGI) limitations, 7 CFR Part 1400, that apply to WHIP participants since WHIP has become a Title XII conservation program. In order to comply with AGI requirements, legal entities must provide to NRCS a list of members, including members in embedded entities, along with their social security numbers and percent interest in the legal entity.

NRCS adds new program requirements through this interim final rule to improve program administration and to ensure that WHIP program goals are met. In particular, NRCS adds paragraph (a)(2) to require WHIP participants to be in compliance with terms of all other USDA-administered conservation program contracts to which they are a party. In this manner, NRCS ensures that a participant who receives NRCS conservation benefits is meeting their existing responsibilities prior to receiving additional assistance.

NRCS also adds paragraph (a)(3) related to the implementation of the WHIP plan of operations and the associated operations and management (O & M) agreement to ensure consistency between § 636.4 and changes made to § 636.3 and § 636.8.

NRCS also adds several provisions related to payment matters. In particular, one paragraph (a)(9) clarifies that payments made to Tribal groups may exceed the payment limitation if the Bureau of Indian Affairs or a Tribal official certifies that no one individual will receive more than the established payment limitation.

Additionally, NRCS adds paragraph (a)(10) to clarify that participants must supply NRCS with information needed to determine program eligibility, including information required to determine an applicant's status as a limited resource or beginning farmer or rancher. Finally, NRCS adds paragraph (a)(11) that requires participants that use an alternative identifier, rather than a tax identification number, to continue to use that same identifier in all WHIP cost-share agreements.

NRCS makes several adjustments to § 636.4(b) to incorporate the 2008 Act changes to land eligibility and to conform the language to the new definitions described in § 636.3. In particular, NRCS identifies in § 636.4(b) that eligible lands include agricultural land, nonindustrial private forest land, and Indian land, as defined in § 636.3.

NRCS also revises § 636.4(c) to incorporate changes to clarify land ineligibility. In particular, NRCS deletes the phrase ''through other forms of assistance or without assistance,'' since

the manner in which an applicant achieved habitat objectives is immaterial to the determination that such lands are ineligible for participation in the program. NRCS also deletes reference to the attainability of wildlife habitat on offered lands since that consideration is more appropriately addressed in ranking criteria. In accordance with Section 1240N(a) of the 1985 Act, as amended by Section 2602 of the 2008 Act, public land is ineligible for WHIP assistance.

Section 636.5, National Priorities

NRCS inserts a new § 636.5, and redesignates the subsequent sections accordingly. The new § 636.5 provides that NRCS will establish National Priorities to guide funding to the State offices, selection of WHIP cost-share agreements, and implementation priority for WHIP conservation practices. This new section also states that the national priorities will be reviewed annually by NRCS to ensure that the program is addressing priority wildlife habitat concerns. This addition makes WHIP consistent with other NRCS conservation programs.

Section 636.6, Establishing Priority for Enrollment in WHIP

NRCS amends § 636.6(a) by replacing ''needs'' with ''wildlife habitat concerns.'' NRCS also amends § 636.6(a) by adding the following sentence, ''NRCS, in consultation with Federal and state agencies and conservation partners, may identify priorities for enrollment in WHIP that will complement the goals and objectives of relevant fish and wildlife conservation initiatives at the State, regional, and national levels.'' These changes clarify that NRCS may focus program implementation in any given year to respond to national, regional, state wildlife habitat concerns, identified by NRCS in partnership with other Federal and State agencies. Local wildlife habitat concerns issues may be elevated to the appropriate State Conservationist in an effort to address specific habitat development needs.

NRCS amends § 636.6(b) by striking the term ''species,'' consistent with the program purpose of development of wildlife habitat. While the intent of such development is to benefit wildlife species, the program focus is on the land and water resources covered by cost-share agreements entered into under the program.

NRCS adds a new ranking criteria to § 636.6(c) to allow NRCS to consider a participants' willingness to complete habitat development within two years of the cost-share agreement. This criterion is intended to encourage quicker implementation of wildlife habitat improvements and reduce the number of modifications and cancellations. NRCS deletes § 636.6(d) since the function of denying applications is better addressed in the application ranking process.

Section 636.7, Cost-Share Payments

NRCS replaces the term ''WHDP'' with ''WPO,'' to correspond with the changes NRCS makes to §§ 636.3 and 636.8. Like the WHDP, WPO is the document that identifies the location and timing of conservation practices that the participant agrees to implement on eligible land in order to address the priority resource concerns. NRCS has chosen to change this terminology to make it consistent with other financial assistance programs administered by NRCS.

NRCS revises § 636.7(a)(1) to reflect that ''NRCS shall offer to pay no more than 75 percent of the costs of establishing conservation practices,'' consistent with changes made in § 636.3. NRCS also adds a new provision under § 636.7(a) to allow NRCS to provide additional cost-share incentives to ''historically underserved producers'' and Indian tribes. ''Historically underserved producers'' include limited resource, beginning farmers or ranchers, and socially disadvantaged farmers or ranchers. This addition is consistent with the authority provided under Section 1244 of the 1985 Act, as amended by Section 2708 of the 2008 Act, to provide additional incentives for certain farmers, ranchers, and Indian tribes, which reads as follows:

(a) Incentives for Certain Farms and Ranchers and Indian tribes:

(1) Incentives Authorized. In carry out any conservation program administered by the Secretary, the Secretary may provide to a person or entity specified in paragraph (2) incentives to participate in the conservation program—

(i) To foster new farming and ranching opportunities; and

(ii) To enhance long-term environmental goals.

(2) Covered Persons. Incentives authorized by paragraph (1) may be provided to the following:

(i) Beginning farmers or ranchers;

(ii) Socially disadvantaged farmers or ranchers;

(iii) Limited resource farmers or ranchers; and

(iv) Indian tribes.

Under this authority, which applies to all conservation programs implemented by the Secretary, NRCS proposes in this rulemaking to increase WHIP cost-share rates to the participants identified under Section 1244(a)(2) of the 1985 Act, as amended. Since WHIP's legislative authority does not establish a definitive payment rate, NRCS is adopting in § 636.7 the Environmental Quality Incentives Program's cost-share rate policies for historically underserved producers. The payment rate for historically underserved producers is the applicable payment rate and an additional payment rate that is no less than 25 percent above the applicable payment rate, provided this increase does not exceed 90 percent of the estimated incurred costs associated with the conservation practice. This proposal not only enables those who are less capable of matching Federal assistance to receive additional program support, but also supports the NRCS effort to streamline program policies where possible.

NRCS revises § 636.7(b) by relocating to § 636.8(e) the requirement that the participant or designee is responsible for the implementation of the WPO. The reference to the source of implementation is more appropriately in the section related to the WPO.

NRCS also adds new paragraphs (c) and (d) to § 636.7, and redesignates the former § 636.7(c) as (e). NRCS clarifies in the new § 636.7(c) that conservation practices implemented prior to an applicant submitting an application to the program are ineligible for payments. Additionally, NRCS clarifies in § 636.7(c) that conservation practices implemented or initiated prior to the approval of a cost-share agreement are ineligible for payment, unless NRCS grants a waiver in advance. Section 636.7(d) clarifies existing policy that NRCS will identify and provide public notification of the conservation practices eligible for cost-share payments under the program.

NRCS also adds new paragraphs (f) through (j) to § 636.7 to be consistent with related NRCS conservation programs. More particularly, § 636.7(f) incorporates the payment limitation as established by the 2008 Act. Section 636.7(g) states that adjusted gross income (AGI) eligibility will be determined prior to cost-share agreement approval. Section 636.7(h) allows for current year cost-adjustment for conservation practices, subject to the availability of funds. NRCS clarifies in § 636.7(i) that NRCS will not make a payment for a conservation practices under WHIP if the participant has already received a payment for the same practice on the same land under another USDA conservation program. Section 636.7(j) requires that the participant and NRCS, or an approved TSP, certify that the conservation practices have been

carried out in accordance with the cost-share agreement and agency standards prior to issuing final cost-share payments.

Lastly, NRCS adds paragraph (k) in accordance with Section 1240N(b)(2)(B) that specifies the NRCS may use up to 25 percent of WHIP funds to carry out cost-share agreements that extend 15 years or more. Prior to the 2008, NRCS had the legislative authority to use up to 15 percent of WHIP funds to carry out these longer term agreements.

Section 636.8, WHIP Plan of Operations (WPO)

NRCS changes the caption, ''Wildlife Habitat Development Plan,'' to ''WHIP plan of operations (WPO),'' consistent with how related NRCS conservation programs identify the document that contains the information related to practices and activities to be implemented under the program.

NRCS makes several revisions to § 636.8(a) to reduce the administrative burden upon participants. In particular, NRCS removes the language ''and the WHDP is approved by participant, NRCS, and the local conservation district'' as a result of the need to protect personally identifiable information in accordance with Section 1619 of the 2008 Act. This change also was recommended by comments received by USDA through the Farm Bill forums.

NRCS revises § 636.8(b) to clarify the NRCS expectation that the program participant will maintain WHIP-funded conservation practices as specified in the O&M agreement that is consistent with other NRCS conservation programs. NRCS also removes the requirement that a program participant has to sign both the cost-share agreement and the WPO by adding the following language: ''the WPO * * * shall be attached and included as part of the cost-share agreement.''

NRCS revises § 6363.8(d) to clarify that all conservation practices planned in the WPO are in accordance with the NRCS field office technical guide (FOTG), consistent with related NRCS conservation programs.

Finally, as indicated above, NRCS incorporates into § 636.8(e) the requirement contained previously in § 636.7(b) that a participant is responsible for the implementation of the WPO.

Section 636.9, Cost-Share Agreements

NRCS amends § 636.9(a) to update the locations available for submitting an application to participate in WHIP. This change serves to notify the public of all the avenues available for submitting applications.

Under § 636.9(b)(2), NRCS revises the duration of the cost-share agreement from the former 5- to 10-year duration to a minimum duration of one year and a maximum of 10 years, with the exception of long-term agreements as established under § 636.9(c). This new language provides the flexibility needed for establishing agreement lengths based on wildlife habitat needs and other factors.

NRCS removes § 636.9(b)(4) because the operation and maintenance requirements are included in the O&M agreement. Correspondingly, paragraphs (b)(5) and (6) of this section are redesignated as (b)(4) and (5), respectively. NRCS adds a new § 636.9(b)(6) to clarify that payment limits will be specified in the cost-share agreement, consistent with related NRCS conservation programs. NRCS also adds a new § 636.9(b)(7) that states that the O&M agreement expresses the NRCS expectation that participants will operate and maintain conservation practices installed with program assistance for the lifespan of the installed practices. NRCS has developed this O&M agreement for two reasons: (1) To increase the transparency of a participant's contract responsibilities; and (2) to ensure these conservation practices are maintained for the length of time for which they were designed and created. The previous § 636.9(b)(7) has been redesignated as § 636.9(b)(8).

NRCS removes § 636.9(c) pursuant to modifications in the cost-share agreement terms made in § 636.8(b)(2). NRCS redesignates § 636.9(d) as § 636.9(c), and revises § 636.9(c)(3), to establish a maximum cost-share rate of 90 percent for conservation practices installed under long-term cost-share agreements where the duration of the agreement is for 15 years or longer.

Section 636.10, Modifications

NRCS simplifies the language in § 636.10(a) to reduce the number of steps required to modify a cost-share agreement and protect personally identifiable information. This change also ensures that the WPO and O&M agreement are also modified along with the cost-share agreement. NRCS deletes § 636.10(b) as redundant to § 636.10(a), and redesignates existing § 636.10(c) as § 636.10(b). Section 636.10(c) is added to ensure that in the event a conservation practice fails through no fault of the participant, the State Conservationist may issue payments to re-establish the conservation practice, in accordance with established payment rates and limitations.

Section 636.11, Transfer of Interest in a Cost-Share Agreement

NRCS makes several formatting changes in this section to improve its structure. In particular, §§ 636.11(a)(2), (b)(1), and (b)(2) have been redesignated as §§ 636.11(c), (d), and (e), respectively. NRCS makes these changes to simplify the original formatting.

NRCS revises § 636.11(a) to simplify and clarify that participants must notify NRCS if they anticipate loss of control over the land covered by a cost-share agreement, consistent with related NRCS conservation programs. NRCS adds a new § 636.11(b) to address the transfer of responsibilities under WHIP cost-share agreements, consistent with other NRCS conservation programs.

Section 636.12, Termination of Cost-Share Agreements

NRCS revises § 636.12(a) to clarify that NRCS may unilaterally terminate a cost-share agreement under certain circumstances. NRCS deletes § 636.12(a)(2) because the circumstances identified in that provision are already addressed by § 636.12(a)(1). Accordingly, NRCS redesignates § 636.12(a)(3) as § 636.12(a)(2) and adds a new § 636.12(a)(3) that specifies that a participant's failure to correct a violation within the allowed time period also is cause for termination.

NRCS revises § 636.12(b) related to cost-share agreement termination to clarify that participants also may forfeit rights to future payments, be assessed liquidated damages, or be determined ineligible for further conservation program funding. NRCS also adds § 636.12(c) to specify that NRCS may reduce costs recovered after a termination decision based on a participant's good faith effort. These revisions align WHIP administration with other NRCS conservation program administration policies concerning cost-share agreement termination and the resulting financial consequences and requirements.

Section 636.13, Violations and Remedies

NRCS reformats some of the provisions in this section to improve the overall structure. Additionally, NRCS deletes the original § 636.13(b), which is identified in the existing regulation as ''reserved.''

In § 636.13(a), NRCS removes the word ''reasonable'' in reference to participant violation notification. The term ''reasonable'' is unnecessary since a 60-day time frame is already provided in which a participant has the opportunity to initiate actions needed to

correct a violation. Section 636.13(a) now provides that ''NRCS shall give the parties to the cost-share agreement notice of the violation and a minimum of 60 days to correct the violation and comply with the terms of the cost-share agreement and attachments thereto.''

NRCS revises § 636.13(b) to include, consistent with other NRCS conservation programs, the assessment of liquidated damages as a possible consequence to a violation of a cost-share agreement. Liquidated damages are not a penalty, but a recognition that some of the damages incurred upon the breach of a party's agreement may not be easily calculated, but are known to occur, such as expenses incurred by NRCS to service the cost-share agreement

Section 636.14, Misrepresentation and Scheme or Device

NRCS amends § 636.14 to be in accordance with the other financial assistance programs administered by NRCS. Specifically, NRCS inserts language concerning the collection of liquidated damages and possible cancellation of all other NRCS contracts if a person is a participant and knowingly misrepresented any fact that affected program determination of their WHIP cost-share agreement.

Section 636.15, Offsets and Assignments

No changes have been made in this section.

Section 636.16, Appeals

No changes have been made in this section.

Section 636.17, Compliance With Regulatory Measures

NRCS adds § 636.17 to identify clearly a participant's responsibilities associated with other regulatory measures. This change reflects standard NRCS language applicable to multiple programs.

Section 636.18, Technical Services Provided by Qualified, Non-USDA Personnel

NRCS adds § 636.18 to incorporate the Technical Service Provider provisions in place since 2002, but not included in the regulation. This section is consistent with related NRCS conservation programs.

Section 636.19, Access to Operating Unit

NRCS adds § 636.19 to be consistent with related NRCS conservation programs. This section provides NRCS personnel authorized physical access to projects undertaken by participants in order to review project progress and give further assistance to participants where it is needed.

Section 636.20, Equitable Relief

NRCS adds § 636.20 to be consistent with other NRCS conservation programs. This section clarifies that WHIP participants who acted in good faith based on erroneous information provided by NRCS or its representatives are entitled to equitable relief if such action resulted in a violation of the cost-share agreement.

Section 636.21, Environmental Services Credits for Conservation Improvements

NRCS adds § 636.21, which states that NRCS recognizes that environmental benefits will be achieved by implementing conservation practices funded through WHIP, and that environmental credits may be gained as a result of implementing these activities. NRCS asserts no direct or indirect interest in these credits. However, NRCS retains the authority to ensure that the requirements for WHIP-funded improvements are met and maintained consistent with the terms of the cost-share agreement. Where activities may affect the land covered by a WHIP cost-share agreement, participants are highly encouraged to request a compatibility assessment from NRCS prior to entering into any environmental credit agreements. This section is consistent with the policy that is being adopted in multiple NRCS programs.

Section 2708, ''Compliance and Performance,'' of the 2008 Act added a paragraph to Section 1244(g) of the 1985 Act entitled, ''Administrative Requirements for Conservation Programs,'' which states the following:

> ''(g) Compliance and performance.—For each conservation program under Subtitle D, the Secretary shall develop procedures—
>
> (1) To monitor compliance with program requirements;
>
> (2) To measure program performance;
>
> (3) To demonstrate whether long-term conservation benefits of the program are being achieved;
>
> (4) To track participation by crop and livestock type; and
>
> (5) To coordinate activities described in this subsection with the national conservation program authorized under section 5 of the Soil and Water Resources Conservation Act of 1977 (16 U.S.C. 2004).''

This new provision presents in one place the accountability requirements placed on the Agency as it implements conservation programs and reports on program results. The requirements apply to all programs under Subtitle D, including the Wetlands Reserve program, the Conservation Security Program, the Conservation Stewardship Program, The Farm and Ranch Lands Protection Program, the Grassland Reserve Program, the Environmental Quality Incentives Program (including the Agricultural Water Enhancement Program), the Wildlife Habitat Incentive Program, and the Chesapeake Bay Watershed initiative. These requirements are not directly incorporated into these regulations, which set out requirements for program participants. However, certain provisions within these regulations relate to elements of Section 1244(g) of the 1985 Act and the Agency's accountability responsibilities regarding program performance. NRCS is taking this opportunity to describe existing procedures that relate to meeting the requirements of Section 1244(g) of the 1985 Act, and Agency expectations for improving its ability to report on each program's performance and achievement of long-term conservation benefits. Also included is reference to the sections of these regulations that apply to program participants and that relate to the Agency accountability requirements as outlined in Section 1244(g) of the 1985 Act.

Monitor compliance with program requirements. NRCS has established application procedures to ensure that participants meet eligibility requirements, and follow-up procedures to ensure that participants are complying with the terms and conditions of their contractual arrangement with the government and that the installed conservation measures are operating as intended. These and related program compliance evaluation policies are set forth in Agency guidance (M_440_512 and M_440_517 (*http://directives.sc.egov.usda.gov/*).

The program requirements applicable to participants that relate to compliance are set forth in these regulations in § 636.4, ''Program Requirements,'' § 636.8, ''WHIP Plan of Operations'', and § 636.9, ''Cost-share agreements.'' These sections make clear the general program eligibility requirements, participant obligations for implementing a WHIP plan of operations, participant cost-share agreement obligations, and requirements for operating and maintaining WHIP-funded conservation improvements.

Measure program performance. Pursuant to the requirements of the Government Performance and Results Act of 1993 (Pub. L. 103–62, Sec. 1116) and guidance provided by OMB Circular A–11, NRCS has established performance measures for its conservation programs. Program-funded conservation activity is captured through automated field-level business

tools and the information is made publicly available at: *http://ias.sc.egov.usda.gov/PRSHOME/*. Program performance also is reported annually to Congress and the public through the annual performance budget, annual accomplishments report and the USDA Performance Accountability Report. Related performance measurement and reporting policies are set forth in Agency guidance (GM_340_401 and GM_340_403 (*http://directives.sc.egov.usda.gov/)*.)

The conservation actions undertaken by participants are the basis for measuring program performance—specific actions are tracked and reported annually, while the effects of those actions relate to whether the long-term benefits of the program are being achieved. The program requirements applicable to participants that relate to undertaking conservation actions are set forth in these regulations in § 636.8, ''WHIP Plan of Operations'' and § 636.9, ''Cost-share agreements.'' These sections make clear participant obligations for implementing, operating, and maintaining WHIP-funded conservation improvements, which in aggregate result in the program performance that is reflected in Agency performance reports.

Demonstrate whether long-term conservation benefits of the program are being achieved. Demonstrating the long-term natural resource benefits achieved through conservation programs is subject to the availability of needed data, the capacity and capability of modeling approaches, and the external influences that affect actual natural resource condition. While NRCS captures many measures of ''output'' data, such as acres of conservation practices, it is still in the process of developing methods to quantify the contribution of those outputs to environmental outcomes.

NRCS currently uses a mix of approaches to evaluate whether long-term conservation benefits are being achieved through its programs. Since 1982, NRCS has reported on certain natural resource status and trends through the National Resources Inventory (NRI), which provides statistically reliable, nationally consistent land cover/use and related natural resource data. However, lacking has been a connection between these data and specific conservation programs.[1] In the future, the interagency Conservation Effects Assessment Project (CEAP), which has been underway since 2003, will provide nationally consistent estimates of environmental effects resulting from conservation practices and systems applied. CEAP results will be used in conjunction with performance data gathered through Agency field-level business tools to help produce estimates of environmental effects accomplished through Agency programs, such as WHIP. In 2006 a Blue Ribbon panel evaluation of CEAP[2] strongly endorsed the project's purpose, but concluded ''CEAP must change direction'' to achieve its purposes. In response, CEAP has focused on priorities identified by the Panel and clarified that its purpose is to quantify the effects of conservation practices applied on the landscape. Information regarding CEAP, including reviews and current status is available at (*http://www.nrcs.usda.gov/technical/NRI/ceap/*. Since 2004 and the initial establishment of long-term performance measures by program, NRCS has been estimating and reporting progress toward long-term program goals. Natural resource inventory and assessment, and performance measurement and reporting policies set forth in Agency guidance (GM_290_400; GM_340_401; GM_340_403)) (*http://directives.sc.egov.usda.gov/)*.)

Demonstrating the long-term conservation benefits of conservation programs is an Agency responsibility. Through CEAP, NRCS is in the process of evaluating how these long-term benefits can be achieved through the conservation practices and systems applied by participants under the program. The program requirements applicable to participants that relate to producing long-term conservation benefits are described previously under ''measuring program performance,'' *i.e.*, § 636.8, ''The WHIP Plan of Operations'' and § 636.9, ''Cost-share agreements.'' These and related program management procedures supporting program implementation are set forth in Agency guidance (M_440_512 and M_440_515).

Coordinate these actions with the national conservation program authorized under the Soil and Water Resources Conservation Act (RCA). The 2008 Act reauthorized and expanded on a number of elements of the RCA related to evaluating program performance and conservation benefits. Specifically, the 2008 Farm Bill added a provision stating,

''Appraisal and inventory of resources, assessment and inventory of conservation needs, evaluation of the effects of conservation practices, and analyses of alternative approaches to existing conservation programs are basic to effective soil, water, and related natural resources conservation.''

The program, performance, and natural resource and effects data described previously will serve as a foundation for the next RCA, which will also identify and fill, to the extent possible, data and information gaps. Policy and procedures related to the RCA are set forth in Agency guidance (GM_290_400; M_440_525; GM_130_402) (*http://directives.sc.egov.usda.gov/*).

The coordination of the previously described components with the RCA is an Agency responsibility and is not reflected in these regulations. However, it is likely that results from the RCA process will result in modifications to the program and performance data collected, to the systems used to acquire data and information, and potentially to the program itself. Thus, as the Secretary proceeds to implement the RCA in accordance with the statute, the approaches and processes developed will improve existing program performance measurement and outcome reporting capability and provide the foundation for improved implementation of the program performance requirements of Section 1244(g) of the 1985 Act.

NRCS is amending this rule, 7 CFR part 636, WHIP, republishing it in its entirety and accepting comments until March 17, 2009, on the aforementioned subjects.

List of Subjects in 7 CFR Part 636

Administrative practice and procedure, Agriculture, Conservation, Endangered and threatened species, Natural resources, Soil conservation, Wildlife.

■ For reasons set out in the preamble, NRCS is revising 7 CFR part 636 to read as follows:

PART 636—WILDLIFE HABITAT INCENTIVES PROGRAM

Sec.

636.1 Applicability.
636.2 Administration.
636.3 Definitions.
636.4 Program requirements.
636.5 National priorities.
636.6 Establishing priority for enrollment in WHIP.
636.7 Cost-share payments.
636.8 The WHIP Plan of Operation (WPO).
636.9 Cost-share agreements.
636.10 Modifications.

[1] The exception to this is the Conservation Reserve Program; since 1987 the NRI has reported acreage enrolled in CRP.

[2] Soil and Water Conservation Society. 2006. Final Report from the Blue Ribbon Panel Conducting an External Review of the U.S. Department of Agriculture Conservation Effects Assessment Project. Ankeny, IA: Soil and Water Conservation Society. This review is available at (*http://www.nrcs.usda.gov/technical/NRI/ceap/*).

636.11 Transfer of interest in a cost-share agreement.
636.12 Termination of cost-share agreements.
636.13 Violations and remedies.
636.14 Misrepresentation and scheme or device.
636.15 Offsets and assignments.
636.16 Appeals.
636.17 Compliance with regulatory measures.
636.18 Technical services provided by qualified, non-USDA personnel.
636.19 Access to operating unit.
636.20 Equitable relief.
636.21 Environmental Services Credits for Conservation Improvements.

Authority: 16 U.S.C. 3839bb–1.

§ 636.1 Applicability.

(a) The purpose of the Wildlife Habitat Incentives Program (WHIP) is to help participants develop fish and wildlife habitat on private agricultural land, nonindustrial private forest land, and Indian land.

(b) The regulations in this Part set forth the requirements for the WHIP.

(c) The Chief, Natural Resources Conservation Service (NRCS) may implement WHIP in any of the 50 states, the District of Columbia, the Commonwealth of Puerto Rico, Guam, the Virgin Islands of the United States, American Samoa, and the Commonwealth of the Northern Mariana Islands.

§ 636.2 Administration.

(a) The regulations in this Part will be administered under the general supervision and direction of the Chief, NRCS. The funds, facilities, and authorities of the Commodity Credit Corporation (CCC) are available to NRCS to carry out WHIP. Accordingly, where NRCS is mentioned in this Part, it also refers to the CCC's funds, facilities, and authorities, where applicable.

(b) The State Conservationist will consult with the State Technical Committee in the implementation of the program and in establishing program direction for WHIP in the applicable State. The State Conservationist has the authority to accept or reject the State Technical Committee recommendation; however, the State Conservationist will give strong consideration to the State Technical Committee's recommendation.

(c) NRCS may enter into agreements with Federal and State agencies, Indian tribes, conservation districts, local units of government, public and private organizations, and individuals to assist with program implementation, including the provision of technical assistance. NRCS may make payments pursuant to said agreements for program implementation and for other goals consistent with the program provided for in this Part.

(d) NRCS will provide the public with notice of opportunities to apply for participation in the program.

(e) No delegation in this Part to lower organizational levels shall preclude the Chief of NRCS, or a designee, from determining any issues arising under this Part or from reversing or modifying any determination made under this Part.

§ 636.3 Definitions.

The following definitions will apply to this part and all documents issued in accordance with this part, unless specified otherwise:

Agricultural lands means cropland, grassland, rangeland, pasture, and other land determined by NRCS to be suitable for fish and wildlife habitat development, on which agricultural and forest-related products or livestock are produced. Agricultural lands may include cropped woodland, marshes, incidental areas included in the agricultural operation, and other types of land used for production of livestock.

Applicant means a person, legal entity or joint operation that has an interest in an agricultural operation, as defined in 7 CFR part 1400, who has requested in writing to participate in WHIP.

At-risk species means any plant or animal species as determined by the State Conservationist, with advice from the State Technical Committee, to need direct intervention to halt its population decline.

Beginning Farmer or Rancher means an individual or entity who:

(1) Has not operated a farm or ranch, or who has operated a farm or ranch for not more than 10 consecutive years. This requirement applies to all members of an entity, and will materially and substantially participate in the operation of the farm or ranch.

(2) In the case of a cost-share agreement with an individual, individually or with the immediate family, material and substantial participation requires that the individual provide substantial day-to-day labor and management of the farm or ranch, consistent with the practices in the county or State where the farm is located.

(3) In the case of a cost-share agreement with an entity or joint operation, all members must materially and substantially participate in the operation of the farm or ranch. Material and substantial participation requires that each of the members provide some amount of the management, or labor and management necessary for day-to-day activities, such that if each of the members did not provide these inputs, operation of the farm or ranch would be seriously impaired.

Chief means the Chief of NRCS, United States Department of Agriculture (USDA), or a designee.

Conservation district means any district or unit of State, Tribal, or local government formed under State, Tribal, or territorial law for the express purpose of developing and carrying out a local soil and water conservation program. Such district or unit of government may be referred to as a ''conservation district,'' ''soil conservation district,'' ''soil and water conservation district,'' ''resource conservation district,'' ''natural resource district,'' ''land conservation committee,'' or similar name.

Conservation practice means one or more conservation improvements and activities, including structural practices, land management practices, vegetative practices, forest management, and other improvements that benefit the eligible land and achieve program purposes.

Cost-share agreement means a legal document that specifies the rights and obligations of any participant accepted into the program. A WHIP cost-share agreement is a binding agreement for the transfer of assistance from USDA to the participant to share in the costs of applying conservation.

Cost-share payment means the payments under the WHIP cost-share agreement to develop fish and wildlife habitat or accomplish other goals consistent with the program provided for in this Part.

Designated conservationist means an NRCS employee whom the State Conservationist has designated as responsible for WHIP administration in a specific area.

Field office technical guide (FOTG) means the official local NRCS source of resource information and interpretations of guidelines, criteria, and requirements for planning and applying conservation practices and conservation management systems. It contains detailed information on the conservation of soil, water, air, plant, and animal resources applicable to the local area for which it is prepared.

Habitat development means the conservation practices implemented to establish, improve, protect, enhance, or restore the conditions of the land for the specific purpose of improving conditions for fish and wildlife.

Historically Underserved Producer means an eligible person, joint operation, or legal entity that is a beginning farmer or rancher, socially disadvantaged farmer or rancher, or limited resource farmer or rancher.

Indian land means:

(1) Land held in trust by the United States for individual Indians or Indian tribes, or

(2) Land, the title to which is held by individual Indians or Indian tribes subject to Federal restrictions against alienation or encumbrance, or

(3) Land which is subject to rights of use, occupancy and/or benefit of certain Indian tribes, or

(4) Land held in fee title by an Indian, Indian family or Indian tribe.

Indian tribe means any Indian tribe, band, nation, or other organized group or community, including any Alaska Native village or regional or village corporation as defined in or established pursuant to the Alaska Native Claims Settlement Act (43 U.S.C. 1601 *et seq.*) that is eligible for the special programs and services provided by the United States to Indians because of their status as Indians.

Joint operation means, as defined in 7 CFR part 1400, a general partnership, joint venture, or other similar business organization in which the members are jointly or severally liable for the obligations of the organization.

Legal entity means, as defined in 7 CFR 1400, an entity created under Federal or State law that:

(1) Owns land or an agricultural commodity, product, or livestock; or

(2) Produces an agricultural commodity, product, or livestock.

Lifespan means the period of time during which a conservation practice is to be operated and maintained for the intended purpose.

Limited Resource Farmer or Rancher means:

(1) A person with direct or indirect gross farm sales not more than $155,200 in each of the previous two years (adjusted for inflation using Prices Paid by Farmer Index as compiled by National Agricultural Statistical Service), and

(2) Has a total household income at or below the national poverty level for a family of four, or less than 50 percent of county median household income in each of the previous two years (to be determined annually using Commerce Department Data).

Liquidated damages means a sum of money stipulated in the WHIP cost-share agreement that the participant agrees to pay NRCS if the participant fails to adequately complete the terms of the cost-share agreement. The sum represents an estimate of the technical assistance expenses incurred to service the agreement, and reflects the difficulties of proof of loss and the inconvenience or non-feasibility of otherwise obtaining an adequate remedy.

Livestock means all animals produced on farms and ranches, as determined by the Chief.

Natural Resources Conservation Service (NRCS) is an agency of the USDA, which has the responsibility for administering WHIP using the funds, facilities, and authorities of the CCC.

Nonindustrial private forestland means rural land, as determined by the Secretary, that has existing tree cover or is suitable for growing trees; and is owned by any nonindustrial private individual, group, association, corporation, Indian tribe, or other private legal entity that has definitive decision-making authority over the land.

Operation and maintenance means work performed by the participant to keep the applied conservation practice functioning for the intended purpose during the conservation practice lifespan. Operation includes the administration, management, and performance of non-maintenance actions needed to keep the completed practice functioning as intended. Maintenance includes work to prevent deterioration of the practice, repairing damage, or replacement of the practice to its original condition if one or more components fail.

Operation and maintenance (O&M) agreement means the document that, in conjunction with the WHIP plan of operations, specifies the operation and maintenance responsibilities of the participants for conservation practices installed with WHIP assistance.

Participant means a person, legal entity, or joint operation, or tribe that is receiving payment or is responsible for implementing the terms and conditions of a WHIP cost-share agreement.

Person means, as defined in 7 CFR part 1400, an individual, natural person and does not include a legal entity.

Producer means, as defined in 7 CFR part 1400, a person, legal entity, or joint operation who has an interest in the agricultural operation or who is engaged in agricultural production or forestry management.

Resource concern means a specific natural resource problem that represents a significant concern in a State or region and is likely to be addressed successfully through the implementation of the conservation practices by producers.

Secretary means the Secretary of the USDA.

Socially disadvantaged farmer or rancher means a farmer or rancher who has been subjected to racial or ethnic prejudices because of their identity as a member of a group without regard to their individual qualities.

State Conservationist means the NRCS employee authorized to implement WHIP and direct and supervise NRCS activities in a State, the Caribbean Area, or the Pacific Islands Area.

State Technical Committee means a committee established by the Secretary of the United States Department of Agriculture in a State pursuant to 16 U.S.C. 3861.

Technical assistance means technical expertise, information, and tools necessary for the conservation of natural resources on land active in agricultural, forestry, or related uses. The term includes the following:

(1) Technical services provided directly to farmers, ranchers, and other eligible entities, such as conservation planning, technical consultation, and assistance with design and implementation of conservation practices; and

(2) Technical infrastructure, including activities, processes, tools, and agency functions needed to support delivery of technical services, such as technical standards, resource inventories, training, data, technology, monitoring, and effects analyses.

Technical Service Provider (TSP) means an individual, private-sector entity, or public agency certified by NRCS to provide technical services to program participants in lieu of or on behalf of NRCS.

WHIP plan of operations (WPO) means the document that identifies the location and timing of conservation practices that the participant agrees to implement on eligible land in order to develop fish and wildlife habitat and provide environmental benefits. The WPO is a part of the WHIP cost-share agreement.

Wildlife means non-domesticated birds, fishes, reptiles, amphibians, invertebrates, and mammals.

Wildlife habitat means the aquatic and terrestrial environments required for fish and wildlife to complete their life cycles, providing air, food, cover, water, and spatial requirements.

§ 636.4 Program requirements.

(a) To participate in WHIP, an applicant must:

(1) Be in compliance with the highly erodible and wetland conservation provisions found in 7 CFR part 12;

(2) Be in compliance with the terms of all other USDA-administered conservation program contracts to which the participant is a party;

(3) Develop and agree to comply with a WPO and O&M agreement, as described in § 636.8;

(4) Enter into a cost-share agreement for the development of fish and wildlife habitat as described in § 636.9;

(5) Provide NRCS with written evidence of ownership or legal control for the term of the proposed cost-share agreement, including the O&M agreement. An exception may be made by the Chief in the case of land allotted by the Bureau of Indian Affairs or Indian land where there is sufficient assurance of control.

(6) Agree to provide all information to NRCS determined to be necessary to assess the merits of a proposed project and to monitor cost-share agreement compliance;

(7) Agree to grant to NRCS or its representatives access to the land for purposes related to application, assessment, monitoring, enforcement, verification of certifications, or other actions required to implement this Part;

(8) Provide a list of all members of the legal entity and embedded entities along with members' tax identification numbers and percentage interest in the entity. Where applicable, American Indians, Alaska Natives, and Pacific Islanders may use another unique identification number for each individual eligible for payment;

(9) With regard to cost-share agreements with individual Indians or Indians represented by BIA, payments exceeding the payment limitation may be made to the Tribal participant if a BIA or Tribal official certifies in writing that no one individual, directly or indirectly, will receive more than the payment limitation. The Tribal entity must also provide, annually, a listing of individuals and payments made, by tax identification number or other unique identification number, during the previous year for calculation of overall payment limitations. The Tribal entity must also produce, at the request of NRCS, proof of payments made to the person or legal entity that incurred costs or sacrificed income related to conservation practice implementation.

(10) Supply information, as required by NRCS, to determine eligibility for the program, including but not limited to, information to verify the applicant's status as a limited resource farmer or rancher or beginning farmer or rancher and payment eligibility as established by 7 CFR part 1400, Adjusted Gross Income; and

(11) With regard to any participant that utilizes a unique identification number as an alternative to a tax identification number, the participant will utilize only that identifier for any and all other WHIP cost-share agreements to which the participant is a party. Violators will be considered to have provided fraudulent representation and be subject to full penalties of § 636.13 of this part.

(b) Eligible land includes:

(1) Private agricultural land;

(2) Nonindustrial private forest land; and

(3) Indian land.

(c) Ineligible land. NRCS shall not provide cost-share assistance with respect to conservation practices on land:

(1) Enrolled in a program where fish and wildlife habitat objectives have been sufficiently achieved, as determined by NRCS;

(2) With on-site or off-site conditions which NRCS determines would undermine the benefits of the habitat development or otherwise reduce its value;

(3) On which habitat for threatened or endangered species, as defined in Section 3 of the Endangered Species Act (ESA), 16 U.S.C. 1532, would be adversely affected;

(4) That is public land.

§ 636.5 National priorities.

(a) The following national priorities will be used in WHIP implementation:

(1) Promote the restoration of declining or important native fish and wildlife habitats;

(2) Protect, restore, develop, or enhance fish and wildlife habitat to benefit at-risk species;

(3) Reduce the impacts of invasive species on fish and wildlife habitats; and

(4) Protect, restore, develop, or enhance declining or important aquatic wildlife species' habitats.

(b) NRCS, with advice of other Federal agencies, will undertake periodic reviews of the national priorities and the effects of program delivery at the State and local level to adapt the program to address emerging resource issues. NRCS will:

(1) Use the national priorities to guide the allocation of WHIP funds to the State NRCS offices,

(2) Use the national priorities in conjunction with State and local priorities to assist with prioritization and selection of WHIP applications, and

(3) Periodically review and update the national priorities utilizing input from the public and affected stakeholders to ensure that the program continues to address priority resource concerns.

§ 636.6 Establishing priority for enrollment in WHIP.

(a) NRCS, in consultation with Federal and state agencies and conservation partners, may identify priorities for enrollment in WHIP that will complement the goals and objectives of relevant fish and wildlife conservation initiatives at the state, regional, and national levels. In response to national, regional, and state fish and wildlife habitat concerns, the Chief may limit program implementation in any given year to specific geographic areas or to address specific habitat development needs.

(b) The State Conservationist, in consultation with the State Technical Committee, may give priority to WHIP projects that will address unique habitats, or special geographic areas identified in the State. Subsequent cost-share agreement offers that would complement previous cost-share agreements due to geographic proximity of the lands involved or other relationships may receive priority consideration for participation.

(c) NRCS will evaluate the applications and make enrollment decisions based on the fish and wildlife habitat need using some or all of the following criteria:

(1) Contribution to resolving an identified habitat concern of national, regional, or state importance;

(2) Relationship to any established wildlife or conservation priority areas;

(3) Duration of benefits to be obtained from the habitat development practices;

(4) Self-sustaining nature of the habitat development practices;

(5) Availability of other partnership matching funds or reduced funding request by the person applying for participation;

(6) Estimated costs of fish and wildlife habitat development activities;

(7) Other factors determined appropriate by NRCS to meet the objectives of the program; and

(8) Willingness of the applicant to complete all conservation improvements during the first two years of the WHIP cost-share agreement.

§ 636.7 Cost-share payments.

(a) NRCS may share the cost with a participant for implementing the conservation practices as provided in the WPO that is a component of the WHIP cost-share agreement:

(1) Except as provided in paragraph (a)(2) of this section and § 636.9(c), NRCS shall offer to pay no more than 75 percent of the costs of establishing conservation practices to develop fish and wildlife habitat. The cost-share payment to a participant shall be reduced proportionately below 75 percent to the extent that direct Federal financial assistance is provided to the participant from sources other than NRCS, except for certain cases that merit additional cost-share assistance to

achieve the intended goals of the program, as determined by the State Conservationist.

(2) Historically underserved producers, as defined in § 636.3, and Indian tribes may receive the applicable payment rate and an additional rate that is not less than 25 percent above the applicable rate, provided that this increase does not exceed 90 percent of the estimated incurred costs associated with the conservation practice.

(b) Cost-share payments may be made only upon a determination by the NRCS that a conservation practice or an identifiable component of a conservation practice has been established in compliance with appropriate standards and specifications.

(c) Payments will not be made for a conservation practice that was:

(1) Applied prior to application for the program, or

(2) Initiated or implemented prior to cost-share agreement approval, unless a waiver was granted by the State Conservationist or designated conservationist prior to practice implementation.

(d) NRCS will identify and provide public notice of the conservation practices eligible for payment under the program.

(e) Cost-share payments may be made for the establishment and installation of additional eligible conservation practices, or the maintenance or replacement of an eligible conservation practice, but only if NRCS determines the conservation practice is needed to meet the objectives of the program, or that the failure of the original project was due to reasons beyond the control of the participant.

(f) Payments made or attributed to a participant, directly or indirectly, may not exceed, in the aggregate, $50,000 per year.

(g) Eligibility for payment in accordance with 7 CFR part 1400, subpart G, average adjusted gross income limitation, will be determined prior to cost-share agreement approval.

(h) Subject to fund availability, the payment rates for conservation practices scheduled after the year of contract obligation may be adjusted to reflect increased costs.

(i) A participant will not be eligible for payments for conservation practices on eligible land if the participant receives payments or other benefits for the same practice on the same land under any other conservation program administered by USDA.

(j) Before NRCS will approve and issue final payment, the participant must certify that the conservation practice has been completed in accordance with the cost-share agreement, and NRCS or an approved TSP must certify that the practice has been carried out in accordance with the applicable NRCS field office technical guide.

(k) NRCS, for a fiscal year, may use up to 25 percent of WHIP funds to carry out cost-share agreements described in § 636.9(c).

§ 636.8 The WHIP plan of operations (WPO).

(a) The participant develops a WPO with the assistance of NRCS or other public or private natural resource professionals, who are approved by NRCS. A WPO encompasses the parcel of land where habitat will be established, improved, protected, enhanced, or restored. The WPO shall be approved by NRCS and address at least one of the following:

(1) Fish and wildlife habitat conditions that are of concern to the participant;

(2) Fish and wildlife habitat concerns identified in State, regional, and national conservation initiatives; or

(3) Fish and wildlife habitat concerns identified in an approved area-wide plan that addresses the wildlife resource habitat concern.

(b) The WPO forms the basis for the WHIP cost-share agreement and shall be attached and included as part of the cost-share agreement, along with the O&M agreement. The WPO includes a schedule for installation and maintenance of the conservation practices, as determined by NRCS.

(c) The WPO may be modified in accordance with § 636.10.

(d) All conservation practices in the WPO must be approved by NRCS and developed and carried out in accordance with the applicable NRCS FOTG.

(e) The participant is responsible for the implementation of the WPO.

§ 636.9 Cost-share agreements.

(a) To apply for WHIP cost-share assistance, a person or legal entity must submit an application for participation at a USDA service center to an NRCS representative.

(b) A WHIP cost-share agreement shall:

(1) Incorporate the WPO;

(2) Be for a time period agreed to by the participant and NRCS, with a minimum duration of one year after the completion of conservation practices identified in the WPO and a maximum of 10 years, except for agreements entered into under paragraph (c) of this section;

(3) Include all provisions as required by law or statute;

(4) Include any participant reporting and recordkeeping requirements to determine compliance with the cost-share agreement and program;

(5) Be signed by the participant;

(6) Specify payment limits described in § 636.7(f) including any additional payment limitation associated with determinations made under § 636.7(g);

(7) Include an O&M agreement that describes operation and maintenance for each conservation practice and the Agency expectation that WHIP-funded conservation practices will be operated and maintained for their expected lifespan; and

(8) Include any other provision determined necessary or appropriate by the NRCS representative.

(c) Notwithstanding any limitation of this part, NRCS may enter into a long-term cost-share agreement that:

(1) Is for a term of at least 15 years;

(2) Protects and restores critical plant or animal habitat, as determined by NRCS; and

(3) Provides cost-share payments of no more than 90 percent of the cost of establishing conservation practices to develop fish and wildlife habitat.

§ 636.10 Modifications.

(a) The participant and NRCS may modify a cost-share agreement if both parties agree to the modification, the WPO is revised in accordance with NRCS requirements, and the agreement is approved by the designated conservationist.

(b) Any modifications made under this section must meet WHIP program objectives and must be in compliance with this Part.

(c) In the event a conservation practice fails through no fault of the participant, the State Conservationist may issue payments to re-establish the practice, at the rates established in accordance with § 636.7, provided such payments do not exceed the payment limitation requirements as set forth in § 636.7.

§ 636.11 Transfer of interest in a cost-share agreement.

(a) A participant is responsible for notifying NRCS when he/she anticipates the voluntary or involuntary loss of control of the land covered by a WHIP cost-share agreement.

(b) The participant and NRCS may agree to transfer a cost-share agreement to another producer. The transferee must be determined by NRCS to be eligible to participate in WHIP and must assume full responsibility under the cost-share agreement.

(c) With respect to any and all payments owed to participants who wish to transfer ownership or control of land subject to a cost-share agreement, the division of payment shall be determined by the original party and that party's successor. In the event of a dispute or claim on the distribution of cost-share payments, NRCS may withhold payments without the accrual of interest pending a settlement or adjudication on the rights to the funds.

(d) If such new participants are not willing or not eligible to assume the responsibilities of an existing WHIP cost-share agreement including the O&M agreement, NRCS shall terminate the cost-share agreement and may require that all cost-share payments may be forfeited, refunded, or both.

(e) The participants to the cost-share agreement shall be jointly and severally responsible for refunding the cost-share payments with applicable interest pursuant to paragraph (d) of this section.

§ 636.12 Termination of cost-share agreements.

(a) The State Conservationist may, independently or by mutual agreement with the parties to the cost-share agreement, terminate the cost-share agreement where:

(1) The parties to the cost-share agreement are unable to comply with the terms of the cost-share agreement as the result of conditions beyond their control;

(2) Termination of the cost-share agreement would, as determined by the State Conservationist, be in the public interest; or

(3) A participant fails to correct a violation of a cost-share agreement within the period provided by NRCS in accordance with § 636.13.

(b) If NRCS terminates a cost-share agreement, the participant will forfeit all rights to future payments under the agreement, shall pay liquidated damages, in an amount determined by the State Conservationist in accordance with the terms of the agreement, and shall refund all or part of the payments received, plus interest. Participants violating WHIP cost-share agreements may be determined ineligible for future NRCS-administered conservation program funding.

(1) NRCS may require a participant to provide only a partial refund of the payments received if a previously installed conservation practice can function independently, and is not adversely affected by the violation or the absence of other conservation practices that would have been installed under the cost-share agreement.

(2) The State Conservationist will have the option to waive all or part of the liquidated damages assessed, depending upon the circumstances of the case.

(c) When making termination decisions, the NRCS may reduce the amount of money owed by the participant by a proportion that reflects:

(1) The good faith effort of the participant to comply with the cost-share agreement, or

(2) The existence of hardships beyond the participant's control that have prevented compliance. If a participant claims hardship, that claim must be documented and cannot have existed when the applicant applied for participation in the program.

§ 636.13 Violations and remedies.

(a) If NRCS determines that a participant is in violation of a cost-share agreement, NRCS shall give the parties to the cost-share agreement notice of the violation and a minimum of 60 days to correct the violation and comply with the terms of the cost-share agreement and attachments thereto.

(b) If the participant fails to correct the violation of a cost-share agreement within the period provided by NRCS under paragraph (a) of this section, NRCS may terminate the agreement and require the participant to refund all or part of any of the funds issued under that cost-share agreement, plus interest, and assess liquidated damages, as well as require the participant to forfeit all rights to any future payment under the agreement.

§ 636.14 Misrepresentation and scheme or device.

(a) A participant who is determined to have erroneously represented any fact affecting a program determination made in accordance with this Part shall not be entitled to cost-share agreement payments and must refund to NRCS all payments and pay liquidated damages, plus interest as determined by NRCS.

(b) A participant shall refund to NRCS all payments, plus interest as determined by NRCS, with respect to all NRCS cost-share agreements to which they are a party if they are determined to have knowingly:

(1) Adopted any scheme or device that tends to defeat the purpose of the program;

(2) Made any fraudulent representation; or

(3) Misrepresented any fact affecting a program determination.

(c) Other NRCS cost-share agreements, where this person is a participant, may be terminated.

§ 636.15 Offsets and assignments.

(a) Except as provided in paragraph (b) of this section, any payment or portion thereof to any person or legal entity shall be made without regard to questions of title under State law and without regard to any claim or lien against the land, or proceeds thereof, in favor of the owner or any other creditor except agencies of the U.S. Government. The regulations governing offsets and withholdings found at 7 CFR part 1403 of this title shall be applicable to cost-share agreement payments.

(b) WHIP participants may assign any payments in accordance with 7 CFR part 1404.

§ 636.16 Appeals.

(a) Any participant may obtain reconsideration and review of determinations affecting participation in this program in accordance with 7 CFR parts 11 and 614, except as provided in paragraph (b) of this section.

(b) In accordance with the provisions of the Department of Agriculture Reorganization Act of 1994, Public Law 103–354 (7 U.S.C. 6901), the following decisions are not appealable:

(1) Payment rates, payment limits, and cost-share percentages;

(2) The designation of approved fish and wildlife priority areas, habitats, or practices;

(3) NRCS program funding decisions;

(4) Eligible conservation practices; and

(5) Other matters of general applicability.

(c) Before a participant may seek judicial review of any action taken under this part, the participant must exhaust all administrative appeal procedures set forth in paragraph (a) of this section.

§ 636.17 Compliance with regulatory measures.

(a) Participants who carry out conservation practices shall be responsible for obtaining the authorities, rights, easements, permits, or other approvals necessary for the implementation, operation, and maintenance of the conservation practices in keeping with applicable laws and regulations.

(b) Participants shall be responsible for compliance with all laws and for all effects or actions resulting from the participant's performance under the cost-share agreement.

§ 636.18 Technical services provided by qualified personnel not affiliated with USDA.

(a) NRCS may use the services of qualified TSPs in performing its responsibilities for technical assistance.

(b) Participants may use technical services from qualified personnel of other Federal, State, and local agencies, Indian tribes, or individuals who are certified as TSPs by NRCS.

(c) Technical services provided by qualified personnel not affiliated with USDA may include, but is not limited to: Conservation planning; conservation practice survey, layout, design, installation, and certification; and information; education; and training for producers.

(d) NRCS retains approval authority over certification of work done by non-NRCS personnel for the purpose of approving WHIP payments.

§ 636.19 Access to operating unit.

As a condition of program participation, any authorized NRCS representative shall have the right to enter an agricultural operation or tract for the purposes of determining eligibility and for ascertaining the accuracy of any representations related to cost-share agreements, and performance. Access shall include the right to provide technical assistance; determine eligibility; inspect any work undertaken under the cost-share agreements, including the WPO and O&M agreement; and collect information necessary to evaluate the conservation practice performance specified in the cost-share agreements. The NRCS representative shall make a reasonable effort to contact the participant prior to the exercising of this provision.

§ 636.20 Equitable relief.

(a) If a participant relied upon the advice or action of any authorized NRCS representative and did not know, or have reason to know, that the advice or action was improper or erroneous, NRCS may accept the advice or action as meeting program requirements and grant relief because of the good-faith reliance on the part of the participant. The financial or technical liability for any action by a participant that was taken based on the advice of a NRCS certified non-USDA TSP is the responsibility of the certified TSP and will not be assumed by NRCS when NRCS authorizes payment. Where a participant believes that detrimental reliance on the advice or action of a NRCS representative resulted in an ineligibility or program violation, the participant may request equitable relief under 7 CFR 635.3.

(b) If, during the term of a WHIP cost-share agreement, a participant has been found in violation of a provision of the cost-share agreement, the O&M agreement, or any document incorporated by reference through failure to fully comply with that provision, the participant may be eligible for equitable relief under 7 CFR 635.4.

§ 636.21 Environmental services credits for conservation improvements.

USDA recognizes that environmental benefits will be achieved by implementing conservation practices funded through WHIP, and that environmental credits may be gained as a result of implementing activities compatible with the purposes of a WHIP cost-share agreement. NRCS asserts no direct or indirect interest on any such credits. However, NRCS retains the authority to ensure that the requirements for WHIP funded improvements are met and maintained consistent with §§ 636.8 and 636.9. Where activities required under an environmental credit agreement may affect land covered under a WHIP cost-share agreement, participants are highly encouraged to request a compatibility assessment from NRCS prior to entering into such agreements.

Signed in Washington, DC, on January 9, 2009.

Arlen Lancaster,

Vice President, Commodity Credit Corporation and Chief, Natural Resources Conservation Service.

[FR Doc. E9–827 Filed 1–15–09; 8:45 am]

BILLING CODE 3410–16–P

DEPARTMENT OF AGRICULTURE

Natural Resources Conservation Service

7 CFR Part 652

RIN 0578–AA48

Technical Service Provider Assistance

AGENCY: Natural Resources Conservation Service, United States Department of Agriculture.

ACTION: Interim final rule with request for comment.

SUMMARY: The Natural Resources Conservation Service (NRCS), an agency of the U.S. Department of Agriculture (USDA) is issuing an interim final rule for technical service provider (TSP) assistance as authorized under the Food Security Act of 1985, as amended by the Food, Conservation, and Energy Act of 2008. This interim final rule amends the Technical Service Provider (TSP) regulations to address changes made by the Food, Conservation, and Energy Act of 2008. The Secretary of Agriculture has delegated to NRCS the responsibility for administering the authority for technical service provider assistance.

DATES: *Effective Date:* This rule is effective January 16, 2009.

Comment Date: Submit comments on or before March 17, 2009.

ADDRESSES: You may send comments (identified by Docket Number NRCS–IFR–08011) using any of the following methods:

- *Government-wide rulemaking Web site:* Go to *http://www.regulations.gov* and follow the instructions for sending comments electronically.
- *Mail:* Technical Service Provider Team, Natural Resources Conservation Service, Technical Service Provider Assistance Comments, P.O. 2890, Room 5234–S, Washington, DC 20013.
- *Fax:* 1–202–720–5334.
- *Hand Delivery*: Room 5234–S of the USDA South Office Building, 1400 Independence Avenue, SW., Washington, DC 20250, between 9 a.m. and 4 p.m., Monday through Friday, except Federal holidays. Please ask the guard at the entrance to the South Office Building to call 202–720–4630 in order to be escorted into the building.
- This interim final rule may be accessed via Internet. Users can access the NRCS homepage at *http://www.nrcs.usda.gov/*; select the Farm Bill link from the menu; select the *Interim final* link from beneath the *Final and Interim Final Rules Index* title. Persons with disabilities who require alternative means for communication (Braille, large print, audio tape, etc.) should contact the USDA TARGET Center at: (202) 720–2600 (voice and TDD).

FOR FURTHER INFORMATION CONTACT: Team Leader, Technical Service Provider Team, NRCS, P.O. Box 2890, Washington, DC 20013–2890; phone: (202) 720–6731; fax: (202) 720–5334; or e-mail: *TSP2008@wdc.usda.gov*.

SUPPLEMENTARY INFORMATION:

Regulatory Certifications

Executive Order 12866

Pursuant to Executive Order 12866, this interim final rule with request for comment has been determined to be a significant regulatory action. The administrative record is available for public inspection in Room 5831 South Building, USDA, 14th and Independence Avenue, SW., Washington, DC. As required by Executive Order 12866, NRCS conducted an economic analysis of the potential impacts associated with this program. A summary of the economic analysis can be found at the end of this

preamble and a copy of the analysis is available upon request from the Team Leader, Technical Service Provider Team, Natural Resources Conservation Service, Room 5234–S, Washington, DC 20250–2890.

Regulatory Flexibility Act

NRCS has determined that the Regulatory Flexibility Act is not applicable to this interim final rule because the NRCS is not required by 5 U.S.C. 553, or any other provision of law, to publish a notice of proposed rulemaking with respect to the subject matter of this rule.

Environmental Analysis

The regulations promulgated by this interim final rule establish a process of using technical service providers to provide technical assistance to participants in NRCS conservation programs. The regulations do not take or authorize any actions that will have any effect on the human environment. Accordingly, a separate analysis for this rulemaking under the National Environmental Policy Act is not required.

Civil Rights Impact Analysis

A Civil Rights Impact Analysis has been completed regarding this interim final rule. The review reveals no factors indicating any disproportionate adverse civil rights impacts for participants in NRCS programs and services who are minorities, women, or persons with disabilities. A copy of this analysis is available upon request from the Team Leader, Technical Service Provider Team, Natural Resources Conservation Service, P.O. Box 2890, Washington, DC 20013–2890.

Paperwork Reduction Act

Section 2904 of the 2008 Act provides that the promulgation of regulations and the administration of Title II of this Act shall be made without regard to chapter 35 of Title 44 of the United States Code, also known as the Paperwork Reduction Act. Therefore, NRCS is not reporting recordkeeping or estimated paperwork burden associated with this interim final rule.

Government Paperwork Elimination Act

NRCS is committed to compliance with the Government Paperwork Elimination Act (GPEA) and the Freedom to E-File Act, which require Government agencies in general to provide the public the option of submitting information or transacting business electronically to the maximum extent possible. To better accommodate public access, NRCS has developed an online application and information system, TechReg, for use by the public and technical service providers.

Executive Order 12988

This interim final rule has been reviewed in accordance with Executive Order 12988, Civil Justice Reform. The provisions of this interim final rule are not retroactive. This interim final rule preempts State and local laws to the extent such laws are inconsistent with this interim final rule. Before an action may be brought in a Federal court of competent jurisdiction, the administrative appeal rights afforded persons at 7 CFR part 614 must be exhausted.

Federal Crop Insurance Reform and Department of Agriculture Reorganization Act of 1994

Pursuant to section 304 of the Department of Agriculture Reorganization Act of 1994, Public Law 104–354, USDA classified this interim final rule as not major.

Unfunded Mandates Reform Act of 1995

Pursuant to Title II of the Unfunded Mandates Reform Act of 1995, Public Law 104–4, NRCS assessed the effects of this rulemaking action on State, local, and Tribal governments, and the public. This action does not compel the expenditure of $100 million or more by any State, local, or Tribal governments, or anyone in the private sector; therefore, a statement under section 202 of the Unfunded Mandates Reform Act of 1995 is not required.

Small Business Regulatory Enforcement Fairness Act of 1996 (SBREFA)

Section 2904(c) of the Food, Conservation, and Energy Act of 2008 requires that the Secretary use the authority in section 808(2) of title 5, United States Code, which allows an agency to forgo SBREFA's usual Congressional Review delay of the effective date of a regulation if the agency finds that there is a good cause to do so. NRCS hereby determines that it has good cause to do so in order to meet the Congressional intent to have the conservation programs authorized or amended by Title II in effect as soon as possible. Accordingly, this rule is effective upon filing for public inspection by the Office of the Federal Register.

Economic Analysis—Executive Summary

Pursuant to Executive Order 12866, Regulatory Planning and Review, the Natural Resources Conservation Service (NRCS) has conducted a benefit-cost analysis of the Technical Service Provider Initiative (TSP) as formulated for the interim final rule. This requirement provides decision makers with the opportunity to develop and implement a program that is beneficial, cost effective and that minimizes negative impacts to health, human safety, and the environment.

TSP provides another avenue for eligible participants to obtain the assistance they need to achieve the conservation objectives on their land—that is, through technical service providers. Eligible participants may choose to receive technical assistance directly from NRCS, by selecting a certified TSP from an approved list, or through an agreement NRCS has entered into with a TSP to provide the necessary assistance. TSPs are certified professionals, qualified to provide NRCS program participants with the technical services necessary to implement their conservation projects. Technical services include conservation planning, technical consultations, assistance with design and implementation of conservation practices, and related services.

The rule changes outlined in this interim rule do not address whether TSP could provide technical services at low cost or extend service in areas experiencing heavy workloads or in instances where NRCS personnel lack special skills or training in certain professional areas. Rather, the rule changes incorporate the changes made by the 2008 Act. Serious and thorough analysis of the actual cost and benefits of extending NRCS services has been addressed in its 2004 Cost Benefit Assessment (Use of Technical Service Providers to deliver technical assistance to conservation programs in the United States). This analysis found that TSP provides positive net benefits given potential future increased workloads on NRCS with little growth in the NRCS workforce. TSPs could enable NRCS program participants to begin their projects sooner than would otherwise be the case. This effect could increase environmental benefits for programs utilizing TSPs. In addition, the use of TSPs could potentially increase the amount of contracts that actually are completed rather than cancelled because of time delays. Neither the 2004 nor the 2008 TSP Cost Benefit Analysis provides a cost comparison of TSPs costs with internal NRCS costs.

The current analysis does not address any of the core principles associated with TSP, but addressed several discretionary policy items which were qualitatively assessed. None of these policy items were expected to produce

significant adverse effects to implementation of conservation practices and the overall operation of NRCS.

Discussion of Program

Background

NRCS is issuing an interim final rule for the implementation of TSP assistance, as authorized by section 1242 of the Food Security Act of 1985, as amended. In this preamble, NRCS provides background information about the TSP assistance provisions, the amendments made by the Food, Conservation, and Energy Act of 2008 (2008 Act), Public Law 110–246, 122 Stat. 1651, and the changes made to the TSP regulations to implement those statutory changes.

NRCS utilizes its technical expertise to provide information to eligible participants (producers, land owners, or entities) who apply to or are eligible to participate in conservation programs to help them make land management decisions and to implement conservation practices and systems. Through its conservation planning process, NRCS helps the participant develop a conservation plan and, subject to the availability of funds, the Department provides financial assistance to the eligible participant to implement conservation practices or systems.

The Farm Security and Rural Investment Act of 2002 (2002 Act), Public Law 107–171, expanded the authority for providing technical assistance for the implementation of conservation programs. Specifically, the 2002 Act amended section 1242 of the Food Security Act of 1985 to require USDA to provide technical assistance under the Food Security Act conservation programs to a producer eligible for that assistance ''directly * * * or at the option of the producer, through a payment * * * to the producer for an approved third party, if available.'' The Secretary of Agriculture delegated authority to implement section 1242 to NRCS.

NRCS published an interim final rule on November 21, 2002 (67 FR 70119) to enact the technical service provider assistance provisions of the 2002 Act. Through the interim final rule, NRCS: (1) Established a certification process under which NRCS would evaluate and approve individuals, entities, and public agencies as eligible to provide conservation technical assistance for certain conservation programs; (2) established criteria by which NRCS would evaluate all potential providers of technical assistance; (3) set forth conditions and procedures by which NRCS would determine if a TSP has failed to provide adequate technical services and should not remain certified as a provider; and (4) requested comments on proposed methods for determining payment rates for reimbursing participants for technical services obtained from TSPs. On March 24, 2003, NRCS published an amendment to the interim final rule (68 FR 14131), establishing the process for determining payment levels. A second amendment was published on July 9, 2003 (68 FR 40751) that established a limited exception to certification and payment requirements when USDA was partnering with a State, local, or Tribal government to carry out its duty to provide technical services. On November 29, 2004, NRCS published the final rule (69 FR 69450) on technical service provider assistance, limiting certification requirements to technical service providers hired directly by program participants, specifying qualification requirements for technical service provider services acquired by the Department, incorporating public comment, and making organizational improvements.

The 2008 Act

Section 2706 of the 2008 Act amended section 1242 of the Food Security Act of 1985 to ''increase the availability and range of technical expertise available to eligible participants to plan and implement conservation measures.'' Specifically, section 2706 of the 2008 Act amends section 1242 of the Food Security Act of 1985 to:

- Define eligible participants as producers, landowners, and entities that are eligible to participate in Title II programs or under the Agricultural Management Assistance (AMA) program authorized by Section 524 of the Federal Crop Insurance Act (7 U.S.C. 1524). The inclusion of eligible participants under AMA is an expansion of the TSP applicability.
- Require the Secretary to provide national criteria for the certification of third party providers and to approve any unique certification requirements that are proposed by the Agency at the State level.
- Provide specific authority for the Secretary to provide technical assistance for conservation programs authorized under Title XII of the 1985 Act and the Agricultural Management Assistance program under section 524 of the Federal Crop Insurance Act, 7 U.S.C. 1524, through an agreement with a third party.
- Establish that an agreement between the Secretary and a third party provider shall be for 1 year at a minimum and not to exceed 3 years, and provide for renewal of agreements.
- Require the Secretary to review the certification requirements for third party providers within one year of enactment of the 2008 Act and make any adjustments considered necessary by the Secretary to improve participation.
- Prohibit activities or services that are customarily provided at no cost by a third party provider from being eligible for TSP payment.
- Require the Secretary to establish fair and reasonable payment rates for technical services provided by third party providers.
- Authorize as eligible for payment technical services provided directly to eligible participants (such as conservation planning, education and outreach, and assistance with design and implementation of conservation practices) or related technical services that accelerate conservation program delivery.

Overview of Technical Service Provider Assistance

In 2003, NRCS launched its website TechReg, an internet application, through which individuals, businesses, and public agencies may apply to become certified TSPs. TechReg also serves as a registry through which program participants may obtain certified TSPs. Additionally, payment rates for particular technical service activities are available on TechReg. As of August 2008, nearly 1,700 entities (individuals or businesses) were certified in the TechReg registry. From October 2003 through September 2008, NRCS expended approximately $217 million for technical service provider assistance.

Description of Changes to the Regulation

Covered Programs

Section 2706 adds the Agricultural Management Assistance (AMA) Program, 7 U.S.C. 1524(b), to the list of programs through which technical service provider assistance may be provided to eligible participants. Consequently, this rulemaking adds reference to AMA at § 652.1(a) and § 652.2. Since the TSP rule only provides assistance for certain conservation activities, eligible activities under the AMA will be limited to those related to conservation.

Technical Service Contracts.

Section 2706 adds section 1242(g)(2), Technical Service Contracts, to the Food

Security Act of 1985 (the 1985 Act). This section provides that even in situations in which financial assistance is not provided under a Title XII program or AMA, the Secretary may enter into technical service contracts with eligible participants for the purpose of providing assistance in the planning, design, or installation of an eligible conservation practice.

The Managers' Report to the 2008 Act identifies increasing the availability of technical assistance as a priority. This authority to enter into technical service contracts will assist landowners in meeting the conservation needs on their lands. The interim final rule establishes that technical service contracts are available only to eligible participants who do not receive financial assistance through programs included in Title XII of the Food Security Act of 1985 and the AMA. In addition, technical service contracts will only be available for technical assistance from TSPs for the planning, design, or installation of conservation practices. NRCS adds a new § 652.5(e) to incorporate the availability of technical service contracts and redesignates the subsequent paragraphs accordingly.

NRCS Training of TSPs

The interim final rule clarifies the role of NRCS in training and sets forth conditions and procedures by which NRCS may provide training to third party providers to assist them in meeting the certification requirements in technical service categories that are established by policy. NRCS adds language to § 652.3(c)(4) that specifies that NRCS may provide limited training to ensure that persons meet the certification criteria for certain technical expertise when there is a lack of training resources or market outside the agency for such technical expertise. However, training to be provided by NRCS will be limited to training about NRCS regulations, policies, procedures, processes, and business and technical tools unique to NRCS.

Related Technical Services

Section 2706 of the 2008 Act amends the 1985 Act to add section 1242(f)(4), Eligible Activities, which authorize payment to TSPs for ''related technical assistance services that accelerate conservation program delivery.'' Related services are in addition to technical services provided directly to an eligible participant and have the purpose of accelerating conservation program delivery. NRCS has identified ''related technical assistance services'' in this rulemaking to include conservation planning documentation, payment scheduling and documentation, market survey information related to the establishment of easement compensation rates, and similar activities which result in more timely implementation of conservation programs. NRCS adds a new § 636.6(b) to incorporate the ability to make payment for related technical services, and redesignates the subsequent paragraphs accordingly.

TSP Payment Rates

Section 2706 of the 2008 Act added section 1242(f)(5), Payment Amounts. This section provides that the Secretary shall establish fair and reasonable amounts of payments for technical services provided by third party providers.

Currently, NRCS rates are based on the cost to the agency to perform the technical service and are established by the NRCS National Office. The rates include costs associated with planning, design, installation, checkout of conservation practices, and overhead costs.

This rulemaking changes the existing policy by establishing that the NRCS State offices will determine fair and reasonable payment rates for TSP assistance using guidelines established by the National Office and local NRCS cost, market, and procurement data that are available. NRCS will emphasize using market rate data where available to determine TSP payment rates. The National Office will publish the State payment rates for each practice on the TechReg Web site. NRCS revises § 652.5 by removing reference to ''not-to-exceed'' rates and specifying that NRCS will use NRCS cost data, procurement data, and market data to establish the payment rates for TSP assistance.

NRCS will establish the following process to ensure rates are fair and reasonable:

1. At the National level, NRCS will establish guidelines for State Conservationists to develop the payment rates to maintain consistency and quality control. Common guidelines will assist in ensuring consistency in factors and processes among States, while leaving flexibility for variation among States.

2. The State Conservationists will determine fair and reasonable rates for the conservation practices in their respective States. The State Conservationists will establish applicable TSP payment rates based on local cost data, market data, and procurement data as appropriate for the practice.

3. The NRCS National Office will review and approve State payment rates to ensure regional consistency and fairness, and provide a mechanism for review and quality control for the guidelines established in process Step 1. The review and quality control mechanism will include regular and systematic State submittal of payment data to the National office, contract sampling, and a risk assessment of complex, high-volume, and cost-intensive technical services.

NRCS considered establishing national-level TSP payment rates using NRCS cost data, procurement data, and market data as determined by the NRCS National Office. These rates could be adjusted at the State level based on geographical differences. This option was rejected because it would create a duplicative workload at the national and state level by requiring national reasonable TSP rates be developed for all practices and plan types, while still requiring the State level to evaluate individually if the costs needed to be adjusted at the State level. Additionally, rates established at the national level may not be perceived as reasonable by third party providers in States.

NRCS also considered retaining the current methodology where the National Office uses agency cost data to calculate TSP payment rates to participants for eligible practices under conservation programs. However, NRCS experience administering TSP authority over the past 5 years is that such rates based solely upon NRCS costs do not incorporate necessary profit margins to make such rates approximate the rate that the TSPs in the private sector actually charge for their services. NRCS believes utilizing procurement and market data will provide this additional cost consideration that will be considered more fair and reasonable by NRCS conservation program participants, which may increase their participation in the TSP program. Therefore, NRCS is using this rulemaking to change the rate setting methodology from one based solely on NRCS costs to provide such services to one that also includes an emphasis on local market rates.

Certification Requirements

Section 2706 of the 2008 Act made a change to TSP certification requiring the Secretary to provide national criteria for the certification of third party providers and to approve any unique certification requirements that are proposed at the State level. Currently, the TSP rule provides national criteria including that a TSP must meet State, Tribal, and professional business licensing requirements. No additional criteria will be added at the national level. In

addition, experience has shown that unique state level requirements beyond licensing and state law may be a hindrance to effective implementation of the TSP provision. Consequently, NRCS is taking the opportunity to clarify its policy that licensing and state law requirements will be the only state-level certification criteria allowed. No change to the regulation is necessary since state law and licensure requirements are already addressed at section 652.21(a)(2).

Section 2706 of the 2008 Act also requires the Department to review TSP certification requirements within one year of enactment of the 2008 Act to determine if adjustments are needed to improve participation. In accordance with the new statutory requirement, NRCS will review the TSP certification requirements based upon the criteria that NRCS employees must meet to be authorized to provide technical assistance related to particular conservation practices or activities. Changes to the certification requirements for each TSP category will reflect any changes in the NRCS Field Office Technical Guide, such as conservation practices added or discontinued. Additionally, any changes made for a TSP requirement will be reflected in the Field Office Technical Guide, where applicable. The review also will consider the needs of specialty crop, organic farming, and precision agriculture technologies with respect to the completeness and appropriateness of the conservation practice standards and the associated TSP certification requirements. These reviews, though intended to improve participation among TSPs, are administrative matters that do not require changes to this interim final rule.

Summary of Changes by Section

The TSP regulation at 7 CFR part 652 is divided into three subparts. Subpart A sets forth the general provisions related to the delivery of technical services. Subpart B sets forth the certification criteria and process NRCS utilizes to evaluate a technical service provider to determine whether such provider is eligible to provide technical assistance. Subpart C sets forth the process and causes under which a technical service provider may become decertified and, therefore, ineligible to provide technical services. All of the changes to the TSP regulations through this interim final rule are to provisions in Subpart A.

Subpart A describes how program participants choose technical service providers, and how program participants may receive payment from the Department for those services. Subpart A also describes how the Department will expand its delivery of technical services to program participants. The Department must follow existing procurement and financial assistance laws when it enters into transactions to expand the availability of technical services.

Section 652.1 Applicability

In § 652.1(a), NRCS adds the conservation activities in the Agricultural Management Assistance Program to the programs covered by technical service provider assistance provisions. NRCS also incorporates in this section the 2008 Act clarification that there are three methods by which NRCS may deliver technical services to an eligible participant, including:

1. Directly;
2. Through an agreement between NRCS and a third party provider, as provided in § 652.6 of this part; or
3. Through a payment to an eligible participant for an approved third-party provider.

In § 652.1(b), NRCS adds the term ''conservation planning'' to reflect the authority under the 2008 Act for NRCS to enter into a technical service contract with an eligible participant for the development of a conservation plan. NRCS revises the definition of ''Technical service'' to correspond to language included in the definition of ''Technical assistance'' the 2008 Act, which includes technical services and technical infrastructure. Because the scope of this regulation is constrained to ''technical services'' provided by Technical Service Providers, only that portion of the 2008 Act definition is reflected in these regulations. The term ''Indian lands'' is added after ''private land'' to clarify that technical service providers may assist program participants on Indian lands. This change makes the regulation consistent with land eligibility as established for the programs for which technical services are provided under this part.

Section 652.2 Definitions

NRCS replaces the term ''participant'' with the term ''eligible participant'' and revises the definition to correspond to the definition in the 2008 Act. NRCS also includes reference to the Agricultural Management Assistance Program in the definitions for ''program contract'' and ''technical service contract.'' NRCS adds the definition of ''Indian land'' to clarify lands eligible to receive technical service from technical service providers as established under § 652.1(b).

Section 652.3 Administration

NRCS re-designates § 636.3(c)(4) as § 636.3(c)(5) and adds a new § 636.3(c)(4) to incorporate the limited circumstances under which NRCS will provide training to potential technical service providers. NRCS may provide training to technical service providers about its regulations, policies, procedures, processes, and business and technical tools that are unique to NRCS. In this manner, NRCS intends to meet its responsibility under the 2008 Act to encourage the participation of qualified individuals and entities in providing technical services to NRCS program participants.

Section 652.5 Eligible Participant Acquisition of Technical Services

NRCS adds new language to this section providing for technical service contracts if an eligible participant wishes to receive technical assistance but is not receiving financial assistance for implementation of the conservation practices under one of the Title XII conservation programs or AMA.

NRCS also incorporates changes needed to implement the 2008 Act's requirement that NRCS establish fair and reasonable payment rates. NRCS will establish national guidelines for the establishment of payment rates by NRCS State offices. NRCS State Conservationists will use these guidelines and local cost, procurement, and market data to determine payment rates for each technical service activity provided in their respective States. The payment rates established at the State level will be reviewed, approved, and published at the national level through the TechReg Web site.

Section 652.6 Department Delivery of Technical Services

NRCS adds language to § 652.6 to expand the ability to make payments under TSP provisions for ''related technical assistance services.'' Related technical assistance services include activities or services that accelerate conservation program delivery, including such activities as development, processing, or implementation of a program contract, such as recording conservation planning decisions and specifications.

NRCS incorporates language in this section to clarify that NRCS may enter into cooperative agreements or contracts with another agency or with a non-Federal entity to provide technical assistance to eligible program participants, in accordance with revisions made to section 1242(c)(2) of the 1985 Act. While NRCS previously

identified such cooperative agreements and contracts in the TSP rule, the parties with whom NRCS would enter such agreements were not previously identified specifically. NRCS also incorporates the requirement that these agreements are for a minimum of one year, not to exceed three years in duration, and are renewable.

List of Subjects in 7 CFR Part 652

Natural resources, Soil conservation, Technical assistance, Water resources.

■ For the reasons stated in this preamble, the Natural Resources Conservation Service amends Part 652 of Title 7 of the Code of Federal Regulations as follows:

PART 652—TECHNICAL SERVICE PROVIDER ASSISTANCE

■ 1. The authority citation for Part 652 continues to read as follows:

Authority: 16 U.S.C. 3842.

■ 2. Section 652.1 is amended by revising the second sentence of paragraph (a) and revising paragraph (b), to read as follows:

§ 652.1 Applicability.

(a) * * * The Food Security Act of 1985, as amended, requires the Secretary to deliver technical assistance to eligible participants for implementation of its Title XII Programs and the conservation activities in the Agricultural Management Assistance Program, 7 U.S.C. 1524, directly, through an agreement with a third party provider, or, at the option of the producer, through payment to the producer for an approved third party provider. * * *

(b) Technical service providers may provide technical services to eligible participants in conservation planning and in the planning, design, installation, and check-out of conservation practices applied on private land, Indian land, or where allowed by conservation program rules on public land where there is a direct private land benefit.

* * * * *

■ 3. Section 652.2 is amended by revising the definitions for ''program contract'' and ''technical service'', adding definitions for ''eligible participant'', ''Indian land'' and ''technical service contract'', and removing the definition for ''participant''.

The revisions and additions read as follows:

§ 652.2 Definitions.

* * * * *

Eligible Participant means a producer, landowner, or entity who is participating in, or seeking to participate in, a conservation program covered by this rule in which the producer, landowner, or entity is otherwise eligible to participate.

* * * * *

Indian land means all lands held in trust by the United States for individual Indians or Tribes, or all lands, titles to which are held by individual Indians or Tribes, subject to Federal restrictions against alienation or encumbrance, or all lands which are subject to the rights of use, occupancy and/or benefit of certain Tribes. The term Indian land also includes land for which the title is held in fee status by Indian tribes, and the U.S. Government-owned land under the Bureau of Indian Affairs jurisdiction.

* * * * *

Program Contract means the document that specifies the rights and obligations of any individual or entity that has been accepted for participation in a program authorized under Title XII of the Food Security Act of 1985, as amended, or the Agricultural Management Assistance Program, authorized under 7 U.S.C. 1524.

* * * * *

Technical Service Contract means a document that specifies the rights and obligations of an eligible participant to obtain technical services from a technical service provider where the eligible participant will not receive financial assistance for the implementation of the practice paid for in the technical service contract through participation in a Title XII conservation program or the Agricultural Management Assistance Program, 7 U.S.C. 1524.

Technical service means the assistance provided by technical service providers, including conservation planning; conservation practice design, layout, and installation; and certification that the conservation practice meets NRCS standards and specifications.

* * * * *

■ 4. Section 652.3 is amended by removing the word ''and'' from the end of paragraph (c)(3), redesignating paragraph (c)(4) as (c)(5), and adding a new paragraph (c)(4) to read as follows:

§ 652.3 Administration.

* * * * *

(c) * * *

(4) Provide training to ensure that persons meet the certification criteria for certain technical expertise when there is a lack of training resources or market outside the agency for such technical expertise. However, any training provided by the Department will be limited to training about Department regulations, policies, procedures, processes, and business and technical tools unique to NRCS; and

* * * * *

■ 5. Section 652.5 is amended by revising paragraph (e), redesignating paragraph (j) as paragraph (k), redesignating paragraphs (f) through (i) as paragraphs (g) through (j), and adding new paragraphs (f), (l), (m) to read as follows:

§ 652.5 Eligible participant acquisition of technical services.

* * * * *

(e) The technical assistance indicated in paragraph (d) may include the development of conservation plans or activity plans suitable for subsequent incorporation into a program contract.

(f) The Department may make payment to eligible participants who have a technical service contract and utilize it for technical assistance from a technical service provider.

* * * * *

(l) The Department shall not make payment for activities or services that are customarily provided at no cost by a technical service provider to a participant as determined by the State Conservationist.

(m) Payment rates for technical services acquired by participants.

(1) NRCS will calculate TSP payment rates for technical services using national, regional, and locally determined price data.

(2) Establishing TSP payment rates.

(i) NRCS will establish guidelines to analyze the local pricing information using a standardized method.

(ii) The State Conservationist will establish TSP payment rates in each State for the various categories of technical services. The State Conservationist will determine the rates according to local NRCS cost data, procurement data, and market data.

(iii) NRCS at the National Office will review and approve State payment rates to ensure consistency where similar resource conditions and agricultural operations exist. Payment rates may vary to some degree between or within States due to differences in State laws, the cost of doing business, competition, and other variables.

(iv) NRCS at the State and National levels will review payment rates annually, or more frequently as needed, and adjust the rates based upon data from existing procurement contracts, Federal cost rates, and other appropriate sources.

(v) NRCS may adjust payment rates, as needed, on a case-by-case basis, in

response to unusual conditions or unforeseen circumstances in delivering technical services such as highly complex technical situations, emergency conditions, serious threats to human health or the environment, or major resource limitations. In these cases, NRCS will set a case-specific TSP payment rate based on the Department's determination of the scope, magnitude, and timeliness of the technical services needed.

■ 6. Section 652.6 is amended by redesignating paragraphs (b) through (e) as paragraphs (d) through (g), adding new paragraphs (b) and (c), and amending redesignated paragraph (e) by adding a second sentence to read as follows:

§ 652.6 Department delivery of technical services.

* * * * *

(b) The Department may also enter into a procurement contract, contribution agreement, cooperative agreement, or other appropriate instrument with technical service providers to provide related technical assistance services that accelerate conservation program delivery. Related technical assistance services may include activities or services that facilitate the development, processing, or implementation of a program contract, such as recording conservation planning decisions and specifications.

(c) NRCS may enter into agreements with other agencies or with a non-Federal entity to provide technical services to eligible participants.

* * * * *

(e) * * * Any contract, contribution agreement, cooperative agreement, or other appropriate instrument entered into under this section shall be for a minimum of one year, shall not exceed three years in duration, and may be renewed upon mutual agreement of the parties.

* * * * *

Signed this 9th day of January 2009, in Washington, DC.

Arlen L. Lancaster,

Chief, Natural Resources Conservation Service.

[FR Doc. E9–828 Filed 1–15–09; 8:45 am]

BILLING CODE 3410–16–P

DEPARTMENT OF AGRICULTURE

Agricultural Marketing Service

7 CFR Parts 944, 980, and 999

[Docket No. AMS–FV–07–0110; FV07–944/980/999–1 FR]

Fruit, Vegetable, and Specialty Crops—Import Regulations; Proposed Revision to Reporting Requirements

AGENCY: Agricultural Marketing Service, USDA.

ACTION: Final rule.

SUMMARY: This rule revises the reporting requirements for imports of commodities regulated under section 608(e) (hereinafter referred to as ''8e'') of the Agricultural Marketing Agreement Act of 1937. These changes require that the inspection certificates generated for each lot of such commodities include the entry number from the U.S. Customs and Border Protection (CBP or Customs) documentation that accompanies that lot. The changes also require that importers of raisins, dates, and dried prunes report products exempt from 8e import regulations on AMS Form FV–6—''Importers' Exempt Commodity Form,'' which is the same form that is currently used by importers of all other commodities exempt from 8e import regulations. These changes are intended to streamline the tracking of imported products and provide uniformity in electronic reporting systems used by the industries and the Department of Agriculture (USDA).

DATES: *Effective Date:* February 17, 2009.

FOR FURTHER INFORMATION CONTACT: Rick Lower or Jared Burnett, Marketing Order Administration Branch, Fruit and Vegetable Programs, AMS, USDA, 1400 Independence Avenue, SW., Stop 0237, Washington, DC 20250–0237; Telephone: (202) 720–2491, Fax: (202) 720–8938, or E-mail: *Richard.Lower@usda.gov or JaredK.Burnett@usda.gov.*

Small businesses may request information on complying with this regulation by contacting Jay Guerber, Marketing Order Administration Branch, Fruit and Vegetable Programs, AMS, USDA, 1400 Independence Avenue, SW., STOP 0237, Washington, DC 20250–0237; Telephone: (202) 720–2491, Fax: (202) 720–8938, or E-mail: *Jay.Guerber@usda.gov.*

SUPPLEMENTARY INFORMATION: This final rule is issued under section 8e of the Agricultural Marketing Agreement Act of 1937, as amended (7 U.S.C. 601–674), hereinafter referred to as the ''Act.'' Section 8e provides that whenever certain commodities are regulated under Federal marketing orders, imports of those commodities into the United States are prohibited unless they meet the same or comparable grade, size, quality, or maturity requirements as those in effect for the domestically produced commodities. To ensure that these requirements are met, the Act also authorizes USDA to perform inspections and issue inspection certificates for such imported commodities.

Parts 944, 980, and 999 of title 7 of the Code of Federal Regulations (CFR) specify the information that should be included on each inspection certificate issued for regulated imports of fruits, vegetables, and specialty crops, respectively. Part 999 further specifies which forms importers should use to report to USDA and CBP imports of raisins, dates, and dried prunes that may be exempt from other 8e requirements. Exempt commodities are those which may be imported for purposes such as processing, donation to charitable organizations, or animal feed.

USDA is issuing this rule in conformance with Executive Order 12866.

There are no administrative procedures which must be exhausted prior to any judicial challenge to the provisions of import regulations issued under section 8e of the Act.

Customs Entry Number

Under the import regulations contained in parts 944, 980, and 999, inspection certificates issued for imports of certain fruits, vegetables, and specialty crops, respectively, must include specific information about the lot being inspected. In addition to stating whether the lot meets the import requirements, such information as the date and place of inspection; the name of the applicant; and the variety, quantity, and identifying marks of the lot inspected are required.

Previously, many inspectors have noted the customs entry number pertaining to the lot being inspected, which is taken from the Customs documentation accompanying that lot, in the ''Remarks'' section or elsewhere on the inspection certificate. The unique entry number is generated for each lot by CBP, and may be found on any one of the various forms used to report imported lots of fruit, vegetable, and specialty crop commodities. USDA has found that the entry number provides an efficient way to identify individual lots of commodities and to cross-reference all the documents pertaining to each lot. If, for instance, a certain lot fails to meet

import regulations when first presented, it may be reworked and presented for inspection a second time. The entry number is used to tie both the original and any succeeding inspections to that lot. Additionally, if a lot that fails to meet import requirements is diverted to another market or destroyed, USDA and the importer can use the entry number to track that lot through the process.

This final rule makes the inclusion of the Customs entry number on all pertinent inspection certificates mandatory. Including the entry number on inspection certificates is intended to allow importers to more easily demonstrate that the requirements have been met for each lot of regulated commodity imported into the United States. This action should also allow USDA to more easily track imported lots.

Form FV–6

Under the import regulations contained in parts 944, 980, and 999, individual lots of some imported commodities may be exempt from 8e regulations if they are to be used in the processing of other products or consumed through some other exempted use, such as by charitable organizations or as animal feed. However, importers and receivers are still required to declare their intent to import those commodities into the United States to CBP and USDA. Most commodities are reported using the generic Form FV–6—''Importer's Exempt Commodity Form.''

Exempt imports of two commodities—raisins and dates—were previously reported on forms unique to those commodities. Exempt imports of raisins were reported on Raisin Form No. 1—''Raisins—Section 8e Entry Declaration'' and Raisin Form No. 2—''Raisins—Section 8e Certification of Processor of Reseller.'' Exempt imports of dates were reported on Date Form No. 1—''Dates—Section 8e Entry Declaration'' and Date Form No. 2—''Dates—Section 8e Certification of Processor of Reseller.''

The 8e regulations for dried prunes were indefinitely suspended on May 27, 2005. The suspended language in § 999.200 specified that exempt imports of dried prunes be reported on Prune Form No. 1—''Prunes—Section 8e Entry Declaration'' and Prune Form No. 2—''Prunes—Section 8e Certification of Processor of Reseller.''

This rule changes the reporting requirements for imported lots of raisins, dates, and dried prunes that are exempt from other 8e regulations by replacing the commodity-specific import declaration forms described above with the generic Form FV–6. The information collected on Raisin, Date, and Prune Forms 1 and 2 is the same as that collected for other commodities reported on Form FV–6. In its conversion to the use of electronic reporting systems, USDA is adopting the use of an electronic Form FV–6 to monitor imports of regulated commodities that are exempt from the import requirements. Replacing the existing raisin, date, and dried prune Forms 1 and 2 with the generic Form FV–6 will enable USDA to streamline its operations by collecting information electronically and eliminating unnecessary forms.

Final Regulatory Flexibility Analysis

Pursuant to the requirements set forth in the Regulatory Flexibility Act (RFA), AMS has considered the economic impact of this rule on small entities. Accordingly, AMS has prepared this final regulatory flexibility analysis.

The purpose of the RFA is to fit regulatory actions to the scale of business subject to such actions in order that small businesses will not be unduly or disproportionately burdened. Marketing orders issued pursuant to the Act, and rules issued thereunder, are unique in that they are brought about through group action of essentially small entities acting on their own behalf. Import regulations issued under the Act are based on those established under Federal marketing orders.

Small agricultural business firms, which include importers and receivers of these commodities, have been defined by the Small Business Administration (13 CFR 121.601) as those having annual receipts of less than $6,500,000. It is likely that the majority of these importers and receivers may be classified as small entities.

This rule revises the reporting requirements for imports of commodities regulated under section 8e by requiring that the entry number from the CBP documentation that accompanies each shipment is included on all inspection certificates pertaining to that lot. Specifically, regulations under part 944 pertaining to imports of avocados, grapefruit, table grapes, kiwifruit, oranges, fresh prunes (plums), and olives; part 980 pertaining to Irish potatoes, onions, and tomatoes; and part 999 pertaining to dates, walnuts, dried prunes, raisins, and filberts (hazelnuts) are revised.

Requiring that the Customs entry number be included on the inspection certificates should have very little impact on importers or receivers. The Customs documentation containing the entry number assigned to each shipment normally accompanies the shipment and should be available at the time of inspection. The inspector will note the entry number on the inspection certificate. This is already being done by many inspectors. The inspection certificate is completed by Federal or Federal-State employees. Therefore, there is no regulatory burden on small entities.

This action further modifies part 999 by requiring that importers and receivers of raisins, dates, and dried prunes report products exempt from 8e import regulations on Form FV–6—''Importers' Exempt Commodity Form,'' instead of the commodity-specific forms previously prescribed for those shipments. Form FV–6 is the same form that is currently used by importers and receivers to report exempted shipments of all other section 8e commodities. There are an estimated 329 importers and receivers of all exempt commodities. These changes are intended to streamline the tracking of imported products and provide uniformity in electronic reporting systems used by the industries and USDA.

It is estimated that 5 importers and 5 receivers of imported raisins for processing, and 5 importers and 10 receivers of imported dates for processing, will be required to replace Raisin and Date Forms No. 1 and 2 with Form FV–6 as a result of this rule. As mentioned above, the domestic order regulations for dried prunes have been suspended. Therefore, the section 8e regulations for imported dried prunes are also suspended. It is unknown how many dried prune importers and receivers would be affected by this rule if the suspension is lifted.

Replacing Raisin, Date, and Prune Forms 1 & 2 with the generic Form FV–6 will eliminate the need to stock various commodity-specific forms. Use of an electronic Form FV–6 should further improve business efficiency for those required to file the reports as well as for USDA.

Raisin, Date, and Prune Forms No. 1 and 2 were previously approved by the Office of Management and Budget (OMB) under OMB No. 0581–0178, ''Vegetable and Specialty Crop Marketing Orders'' for 48.5 burden hours. Form FV–6 is currently approved by OMB under OMB No. 0581–0167, ''Specified Commodities Imported into the United States Exempt from Import Requirements.'' This rule removes 48.5 burden hours from OMB No. 0581–0178, and transfers burden to OMB No. 0581–0167. This information collection has been submitted to OMB for approval.

AMS is committed to complying with the E-Government Act, to promote the use of the Internet and other information technologies to provide increased opportunities for citizen access to Government information and services, and for other purposes. Further, AMS is committed to compliance with the Government Paperwork Elimination Act, which requires government agencies in general to provide the public with the option of submitting information or transacting business electronically to the maximum extent possible.

USDA has not identified any relevant Federal rules that duplicate, overlap or conflict with this rule. As with all Federal marketing order programs, reports and forms are periodically reviewed to reduce information requirements and duplication by the industry and public sector agencies.

A proposed rule concerning this action was published in the **Federal Register** on May 30, 2008 (73 FR 31036). The proposal was made available through the Internet by USDA and the Office of the Federal Register. A 60-day comment period ending July, 29, 2008, was provided for interested persons to submit comments on this proposed rule, including the regulatory and informational impacts of this action on small businesses. No comments were received.

A conforming change to the introductory text of § 999.1(e) was inadvertently omitted from the **Federal Register** publication of the proposed rule. In that text, the reference to Date Form No. 1 should have been changed to refer to Form FV–6. Accordingly, that modification to the proposed rule is made in this final rule. Additional miscellaneous changes are also made for clarity.

A small business guide on complying with fruit, vegetable, and specialty crop marketing agreements and orders may be viewed at: *http://www.ams.usda.gov/fv/moab.html*. Any questions about the compliance guide should be sent to Jay Guerber at the previously mentioned address in the **FOR FURTHER INFORMATION CONTACT** section.

After consideration of all relevant matters presented, it is hereby found that this rule, as hereinafter set forth, will tend to effectuate the declared policy of the Act.

List of Subjects

7 CFR Part 944

Avocados, Food grades and standards, Grapefruit, Grapes, Imports, Kiwifruit, Limes, Olives, Oranges.

7 CFR Part 980

Food grades and standards, Imports, Marketing agreements, Onions, Potatoes, Tomatoes.

7 CFR Part 999

Dates, Filberts, Food grades and standards, Imports, Nuts, Prunes, Raisins, Reporting and recordkeeping requirements, Walnuts.

■ For the reasons set forth above, 7 CFR parts 944, 980, and 999 are amended as follows:

■ 1. The authority citation for 7 CFR parts 944, 980, and 999 continue to read as follows:

Authority: 7 U.S.C. 601–674.

PART 944—FRUITS; IMPORT REGULATIONS

■ 2. In § 944.400, amend paragraph (d) by redesignating paragraphs (d)(3) through (d)(7) as paragraphs (d)(4) through (d)(8) and adding a new paragraph (d)(3) to read as follows:

§ 944.400 Designated inspection services and procedure for obtaining inspection and certification of imported avocados, grapefruit, kiwifruit, oranges, prune variety plums (fresh prunes), and table grapes regulated under section 8e of the Agricultural Marketing Agreement Act of 1937, as amended.

* * * * *

(d) * * *

(3) The Customs entry number pertaining to the lot or shipment covered by the certificate;

* * * * *

■ 3. In § 944.401, amend paragraph (i), by redesignating paragraphs (i)(3) through (i)(8) as paragraphs (i)(4) through (i)(9) and adding a new paragraph (i)(3) to read as follows:

§ 944.401 Olive Regulation 1.

* * * * *

(i) * * *

(3) The Customs entry number pertaining to the lot or shipment covered by the certificate;

* * * * *

PART 980—VEGETABLES; IMPORT REGULATIONS

■ 4. In § 980.1, amend paragraph (g)(4), by redesignating paragraphs (g)(4)(iii) through (g)(4)(vii) as paragraphs (g)(4)(iv) through (g)(4)(viii) and adding a new paragraph (g)(4)(iii) to read as follows:

§ 980.1 Import regulations; Irish potatoes.

* * * * *

(g) * * *

(4) * * *

(iii) The Customs entry number pertaining to the lot or shipment covered by the certificate;

* * * * *

■ 5. In § 980.117, amend paragraph (f)(5), by redesignating paragraphs (f)(5)(iii) through (f)(5)(vii) as paragraphs (f)(5)(iv) through (f)(5)(viii) and adding a new paragraph (f)(5)(iii) to read as follows:

§ 980.117 Import regulations; onions.

* * * * *

(f) * * *

(5) * * *

(iii) The Customs entry number pertaining to the lot or shipment covered by the certificate;

* * * * *

■ 6. In § 980.212, amend paragraph (f)(5), by redesignating paragraphs (f)(5)(iii) through (f)(5)(vii) as paragraphs (f)(5)(iv) through (f)(5)(viii) and adding a new paragraph (f)(5)(iii) to read as follows:

§ 980.212 Import regulations; tomatoes.

* * * * *

(f) * * *

(5) * * *

(iii) The Customs entry number pertaining to the lot or shipment covered by the certificate;

PART 999—SPECIALTY CROPS; IMPORT REGULATIONS

§ 999.1 [Amended]

■ 7. Amend § 999.1 by:

■ A. Redesignating paragraphs (c)(2)(iii) through (c)(2)(v) as paragraphs (c)(2)(iv) through (c)(2)(vi) and adding a new paragraph (c)(2)(iii).

■ B. Revising the introductory text of paragraph (e).

■ C. Removing the phrase ''(c)(2)(iv)'' in paragraph (e)(1) and adding the phrase ''(c)(2)(v)'' in its place.

■ D. Revising paragraph (e)(2).

■ E. Revising paragraph (e)(3).

■ F. Removing the phrase ''Date Form No. 2'' in paragraph (e)(4) and adding the phrase ''Form FV–6'' in its place.

■ G. Removing the phrase ''Date Form No. 2 'Dates for Processing—Section 8e Certification of Processor or Reseller' '' in paragraph (f) and adding the phrase ''Form FV–6—'Importer's Exempt Commodity Form' '' in its place.

■ H. Removing the phrase ''Date Form No. 1 'Dates—Section 8e Entry Declaration' '', in the first sentence in paragraph (g), and adding the phrase ''Form FV–6—'Importer's Exempt Commodity Form' '' in its place.

■ I. Removing the phrase ''Date Form No. 1'', from the second sentence in paragraph (g), and adding the phrase ''Form FV–6'' in its place.

■ The additions and revisions read as follows:

§ 999.1 Regulation governing the importation of dates.

* * * * *

(c) * * *

(2) * * *

(iii) The Customs entry number pertaining to the lot or shipment covered by the certificate;

* * *

(e) *Importation.* No person may import dates into the United States unless he or she first files with the Collector of Customs at the port at which the Customs entry is filed, as a condition of each such importation, either an inspection certificate or an executed Form FV–6—'Importer's Exempt Commodity Form.'

(1) * * *

(2) *Dates for processing and dates prepared or preserved—importation.* Any person may import dates for processing and dates prepared or preserved exempt from the grade, inspection, and certification requirements of this section if the importer first files as a condition of such importation an executed Form FV–6—'Importer's Exempt Commodity Form.' The importer shall promptly transmit a copy of the executed Form FV–6 to the Fruit and Vegetable Division.

(3) *Dates for processing—Sale by importer.* No importer or other person may import, sell, or use any dates for processing other than for use as set forth in paragraph (a)(4) of this section or as otherwise permitted by this section. Each importer of dates for processing shall obtain from each purchaser, no later than the time of delivery to such purchaser, and file with the Fruit and Vegetable Division not later than the fifth day of the month following the month in which the dates were delivered, an executed Form FV–6.

* * * * *

■ 8. In § 999.100, amend paragraph (c)(2), by redesignating paragraphs (c)(2)(iv) and (c)(2)(v) as paragraphs (c)(2)(v) and (c)(2)(vi), respectively, and adding a new paragraph (c)(2)(iv) to read as follows:

§ 999.100 Regulations governing imports of walnuts.

* * * * *

(c) * * *

(2) * * *

(iv) The Customs entry number pertaining to the lot or shipment covered by the certificate;

* * * * *

§ 999.200 [Amended]

■ 9. In § 999.200, lift the suspension of May 27, 2005, and amend the section as follows:

■ A. Remove the phrase ''Prune Form No. 1 'Prunes—Section 8e Entry Declaration' '' in paragraph (b)(5), and add in its place the phrase ''Form FV–6—'Importer's Exempt Commodity Form.' ''

■ B. Redesignate paragraphs (c)(2)(iii) through (c)(2)(v) as paragraphs (c)(2)(iv) through (c)(2)(vi) and add a new paragraph (c)(2)(iii).

■ C. Remove the phrase '' 'Prunes—Section 8e Entry Declaration,' prescribed in paragraph (e)(2) of this section as Prune Form No. 1'' in the second sentence of paragraph (e)(1), and add the phrase ''Form FV–6—'Importer's Exempt Commodity Form;' '' in its place;

■ D. Remove the phrase '' 'Prunes—Section 8e Certification of Processor or Reseller,' prescribed in paragraph (e)(3) of this section as Prune Form No. 2'' in the fifth sentence of paragraph (e)(1), and add the phrase ''Form FV–6—'Importer's Exempt Commodity Form' '' in its place.

■ E. Remove paragraphs (e)(2) and (e)(3).

■ F. Redesignate paragraph (e)(4) as paragraph (e)(2).

■ G. Revise newly designated paragraph (e)(2).

■ The additions and revisions read as follows:

§ 999.200 Regulation governing the importation of prunes.

* * * * *

(c) * * *

(2) * * *

(iii) The Customs entry number pertaining to the lot or shipment covered by the certificate;

* * * * *

(e) * * *

(2) *Manufacturing Grade Substandard Prune—sale by other than importer.* Each wholesaler or other reseller of manufacturing grade substandard prunes should, for his or her protection, obtain from each purchaser and hold in his or her files an executed Form FV–6—'Importer's Exempt Commodity Form' covering each sale during the calendar year.

* * * * *

§ 999.200 [Suspended]

■ 10. Suspend § 999.200 indefinitely.

§ 999.300 [Amended]

■ 11. Amend § 999.300 as follows:

■ A. Redesignate paragraph (c)(2)(iv) through (c)(2)(vi) as paragraphs (c)(2)(v) through (c)(2)(vii) and add a new paragraph (c)(2)(iv).

■ B. Remove the phrase '' 'Raisins—Section 8e Entry Declaration' prescribed in paragraph (e)(2)(i) of this section as 'Raisin Form No. 1' '' in the second sentence of paragraph (e)(2), and add the phrase ''Form FV–6—Importer's Exempt Commodity Form'' in its place.

■ C. Remove the phrase '' 'Raisins—Section 8e Certification of Processor or Reseller,' prescribed in paragraph (e)(2)(ii) of this section as 'Raisin Form No. 2' '' in the fifth sentence of paragraph (e)(2), and add the phrase ''Form FV–6'' in its place.

■ D. Remove the phrase ''Raisin Form No. 2'' in the seventh sentence of paragraph (e)(2), and add the phrase ''Form FV–6'' in its place.

■ E. Remove paragraphs (e)(2)(i) and (e)(2)(ii).

■ The addition reads as follows:

§ 999.300 Regulation governing importation of raisins.

* * * * *

(c) * * *

(2) * * *

(iv) The Customs entry number pertaining to the lot or shipment covered by the certificate;

* * * * *

■ 12. In § 999.400, amend paragraph (c)(3) by redesignating paragraphs (c)(3)(iv) through (c)(3)(vi) as paragraphs (c)(3)(v) through (c)(3)(vii) and adding a new paragraph (c)(3)(iv) to read as follows:

§ 999.400 Regulation governing the importation of filberts.

* * * * *

(c) * * *

(3) * * *

(iv) The Customs entry number pertaining to the lot or shipment covered by the certificate;

* * * * *

Dated: January 13, 2009.

James E. Link,

Administrator, Agricultural Marketing Service.

[FR Doc. E9–1008 Filed 1–15–09; 8:45 am]

BILLING CODE 3410–02–P

DEPARTMENT OF AGRICULTURE

Commodity Credit Corporation

7 CFR Part 1491

RIN 0578–AA46

Farm and Ranch Lands Protection Program

AGENCY: Natural Resources Conservation Service (NRCS) and the Commodity Credit Corporation (CCC),

United States Department of Agriculture (USDA).

ACTION: Interim final rule with request for comments.

SUMMARY: The Food, Conservation, and Energy Act of 2008 (the 2008 Act) amended the Farmland Protection Program (FPP), established by the Federal Agriculture Improvement and Reform Act of 1996, and reauthorized by the Farm Security and Rural Investment Act of 2002. In the implementing rulemaking, the program was named the Farm and Ranch Lands Protection Program (FRPP) to describe best the types of land the program seeks to protect. Under the FRPP, the Secretary of Agriculture, acting through the Natural Resources Conservation Service (NRCS), an agency of the U.S. Department of Agriculture (USDA), is authorized, on behalf of the Commodity Credit Corporation (CCC) and under its authorities, to facilitate and provide funding for the purchase of conservation easements or other interests in land for the purpose of protecting the agricultural use and related conservation values by limiting nonagricultural uses of the land. This rulemaking implements changes to FRPP made by the 2008 Act and makes administrative improvement to the program.

DATES: *Effective Date:* The rule is effective January 16, 2009.

Comment Date: Submit comments on or before March 17, 2009. Comments will be made available to the public or posted publicly in their entirety.

ADDRESSES: You may send comments (identified by Docket Number NRCS–IFR–08006) using any of the following methods:

- *Government-wide rulemaking Web site:* Go to *http://www.regulations.gov* and follow the instructions for sending comments electronically.
- *Mail:* Easements Programs Division, Natural Resources Conservation Service, Farm and Ranch Lands Program Comments, P.O. 2890, Room 6819–S, Washington, DC 20013.
- *E-mail: frpp2008@wdc.usda.gov.*
- *Fax:* 1–202–720–9689
- *Hand Delivery:* Room 6819–S of the USDA South Office Building, 1400 Independence Avenue, SW., Washington, DC 20250, between 9 a.m. and 4 p.m., Monday through Friday, except Federal Holidays. Please ask the guard at the entrance to the South Office Building to call 202–720–4527 in order to be escorted into the building.
- This interim final rule may be accessed via Internet. Users can access the NRCS homepage at *http://www.nrcs.usda.gov/*; select the *Farm Bill* link from the menu; select the *Interim final* link from beneath *the Final and Interim Final Rules Index* title under the heading ''2008 NRCS Farm Bill Conservation Program Rules''. Select *Farm and Ranch Lands Protection Program*. Persons with disabilities who require alternative means for communication (Braille, large print, audio tape, etc.) should contact the USDA TARGET Center at: (202) 720–2600 (voice and TDD).

FOR FURTHER INFORMATION CONTACT: Director, Easement Programs Division, U.S. Department of Agriculture, Natural Resources Conservation Service, Room 6819, P.O. Box 2890, Washington, DC 20013–2890; fax (202) 720–9689; or e-mail: *FRPP2008@wdc.usda.gov*. Persons with disabilities who require alternative means for communication (Braille, large print, audiotape, etc.) should contact the USDA Target Center at (202) 720–2600 (voice and TDD).

SUPPLEMENTARY INFORMATION:

Regulatory Certifications

Executive Order 12866

Pursuant to Executive Order 12866, this interim final rule with request for comment has been determined to be a significant regulatory action. The administrative record is available for public inspection in Room 5831 South Building, USDA, 14th and Independence Avenue, SW., Washington, DC. In accordance with Executive Order 12866, NRCS conducted an economic analysis of the potential impacts associated with this program. A summary of the economic analysis can be found at the end of this preamble and a copy of the analysis is available upon request from the Director, Easement Programs Division, Natural Resources Conservation Service, Room 6819, Washington, DC 20250–2890.

Regulatory Flexibility Act

The Regulatory Flexibility Act is not applicable to this interim final rule because the CCC is not required by 5 U.S.C. 553, or by any other provision of law, to publish a notice of proposed rulemaking with respect to the subject matter of this rule.

Availability of the Environmental Assessment and Finding of No Significant Impact

A programmatic Environmental Assessment (EA) has been prepared in association with this rulemaking. The analysis has determined there will not be a significant impact to the human environment and as a result an Environmental Impact Statement (EIS) is not required to be prepared (40 CFR part 1508.13) The EA and FONSI are available for review and comment for 60 days from the date of publication of this interim final rule in the **Federal Register**. Copies of the EA and FONSI may be obtained from the National Environmental Coordinator, Natural Resources Conservation Service, Ecological Sciences Division, 1400 Independence Ave., SW., Washington, DC 20250. The FRPP EA and FONSI will also be available at the following Internet address: *http://www.nrcs.usda.gov/programs/Env_Assess*. Written comments on the EA and FONSI should be specific and reference that comments are regarding the EA or FONSI. Public comment may be submitted by any of the following means: (1) E-mail comments to *NEPA2008@wdc.usda.gov*, (2) e-mail to e-gov Web site *http://www.regulations.gov*, or (3) mail written comments to National Environmental Coordinator, Natural Resources Conservation Service, Ecological Sciences Division, 1400 Independence Ave., SW., Washington, DC 20205.

Civil Rights Impact Analysis

USDA has determined through a Civil Rights Impact Analysis that the issuance of this rule discloses no disproportionately adverse impacts for minorities, women, or persons with disabilities. Copies of the Civil Rights Impact Analysis are available, and may be obtained from the Director, Easement Programs Division, Natural Resources Conservation Service, P.O. Box 2890, Washington, DC 20013–2890, or electronically at *http://www.nrcs.usda.gov/programs/FRPP*.

Paperwork Reduction Act

Section 2904 of the Food, Conservation and Energy Act of 2008 requires that the implementation of this provision be carried out without regard to the Paperwork Reduction Act, Chapter 35 of title 44, United States Code. Therefore, USDA is not reporting recordkeeping or estimated paperwork burden associated with this interim final rule.

Government Paperwork Elimination Act

NRCS is committed to compliance with the Government Paperwork Elimination Act and the Freedom to E-File Act, which require government agencies in general and NRCS in particular, to provide the public the option of submitting information or transacting business electronically to the maximum extent possible.

Executive Order 12988

This interim final rule has been reviewed in accordance with Executive Order 12988, Civil Justice Reform. The rule is not retroactive and preempts State and local laws to the extent that such laws are inconsistent with this rule. Before an action may be brought in a Federal court of competent jurisdiction, the administrative appeal rights afforded persons at 7 CFR parts 11 and 614 must be exhausted.

Federal Crop Insurance Reform and Department of Agriculture Reorganization Act of 1994

Pursuant to section 304 of the Federal Crop Insurance Reform Act of 1994 (Pub. L. 103–354), USDA classified this rule as non-major. Therefore, a risk analysis was not conducted.

Unfunded Mandates Reform Act of 1995

Pursuant to Title II of the Unfunded Mandates Reform Act of 1995, Public Law 104–4, USDA assessed the effects of this interim final rule on State, local, and Tribal governments, and the public. This rule does not compel the expenditure of $100 million or more by any State, local, or Tribal governments or anyone in the private sector; therefore, a statement under section 202 of the Unfunded Mandates Reform Act is not required.

Executive Order 13132

This interim final rule has been reviewed in accordance with the requirements of Executive Order 13132, Federalism. USDA has determined that this interim final rule conforms with the Federalism principles set forth in the Executive Order; would not impose any compliance costs on the States; and would not have substantial direct effects on the States, on the relationship between the Federal Government and the States, or on the distribution of power and responsibilities on the various levels of government. Therefore, USDA concludes that this interim final rule does not have Federalism implications.

Executive Order 13175

This interim final rule has been reviewed in accordance with the requirements of Executive Order 13175, Consultation and Coordination with Indian Tribal Governments. USDA has assessed the impact of this interim final rule on Indian Tribal Governments and has concluded that this proposed rule will not negatively affect communities of Indian Tribal governments. The rule will neither impose substantial direct compliance costs on tribal governments, nor preempt tribal law.

Small Business Regulatory Enforcement Fairness Act of 1996 (SBREFA)

Section 2904(c) of the Food, Conservation, and Energy Act of 2008 requires that the Secretary use the authority in section 808(2) of title 5, United States Code, which allows an agency to forgo SBREFA's usual Congressional Review delay of the effective date of a regulation if the agency finds that there is a good cause to do so. NRCS hereby determines that it has good cause to do so in order to meet the Congressional intent to have the conservation programs authorized or amended by Title II in effect as soon as possible. Accordingly, this rule is effective upon filing for public inspection by the Office of the **Federal Register**.

Background

FRPP is a voluntary program to help farmers and ranchers preserve their agricultural land. The program provides matching funds to State, Tribal, and local governments, and nongovernmental organizations with farmland protection programs to purchase conservation easements. The Federal Agriculture Improvement and Reform Act of 1996 (1996 Farm Bill), Public Law 104–387, established the Farmland Protection Program (FPP). The Farm Security and Rural Investment Act of 2002 (2002 Farm Bill), Public Law 107–171, repealed the FPP and created a new farmland protection program. USDA promulgated a proposed rule on October 29, 2002 (67 FR 65907), and a final rule on May 16, 2003 (68 FR 26474) implementing the FPP statutory authority and naming the program the Farm and Ranch Lands Protection Program (FRPP). On July 27, 2006, NRCS amended the final rule by promulgating an interim final rule. The interim final rule was prepared to clarify the following policies and legal requirements: Fair market value definition; the eligibility of forest lands; the nature of the United States' real property rights and how the United States will exercise those rights; compliance with Department of Justice (DOJ) Title Standards; the implementation of Federal appraisal requirements required by the Uniform Relocation Assistance and Real Property Acquisitions Policies Act of 1970; impervious surface limitations on the easement area; and indemnification requirements. NRCS viewed these issues to be matters of public interest and thus sought public comment on associated agency policy. Section 2401 of the Food, Conservation, and Energy Act of 2008 (2008 Act), Public Law 110–246, reauthorized FRPP and made several amendments.

The Farm and Ranch Lands Protection Program has enrolled 533,068 acres on 2,764 farms and ranches since 1996. That area has included 386,444 acres of prime, unique, and important farmland soil or about 72 percent of the total acreage enrolled. The program has also enrolled 50,007 acres of upland forest, 13,287 acres of forested wetlands, and 29,174 acres of non-forested wetlands. The Federal contribution to those enrolled parcels was $536 million, the eligible entity contribution was $857 million, the landowner donation was $215 million, and the total estimated value of those easements was $1.6 billion. The average Federal contribution was 33 percent of the total estimated value, the eligible entity contribution was 53 percent, and the landowner donation was 13 percent.

Summary of 2008 Act Changes

The 2008 Act revised the Farm and Ranch Lands Protection Program to:

- Expand the program purpose to protecting agricultural lands by limiting nonagricultural uses.
- Shift the program focus from purchasing conservation easements to facilitating the purchase of conservation easements by eligible entities.
- Require the Secretary to enter into agreements with eligible entities to stipulate the terms and conditions under which the entity is authorized to use FRPP funds to acquire easements.
- Authorize an eligible entity to use its own conservation easement deed terms and conditions, as approved by the Secretary, so long as such terms and conditions are consistent with the purposes of the program, permit effective enforcement of the conservation easement deed or other interest and include, among other terms, a limit on the impervious surfaces to be allowed that is consistent with the agricultural activities to be conducted.
- Require the establishment of a certification process by which the Secretary will directly qualify certain eligible entities as certified entities.
- Require that to be certified, an eligible entity must have a plan for administering easements consistent with FRPP purposes, the capacity and resources to monitor and enforce conservation easements, policies and procedures to ensure long-term integrity of conservation easements, timely completion of acquisitions, and timely reporting of use of funds.
- Require that the fair market value of the conservation easement or other

interest in eligible land is determined on the basis of an appraisal using an industry-approved method, selected by the eligible entity and approved by the Secretary.

• Require that entities provide a share of the cost of purchasing a conservation easement or other interest in eligible land in an amount that is not less than 25 percent of the acquisition purchase price.

• Require that the Secretary hold a right of enforcement in FRPP funded conservation easements.

• Amend the definition of eligible land to allow for the inclusion of forest land as an eligible land use.

• Allow for the inclusion of forest land that contributes to the economic viability of an agricultural operation or serves as a buffer to protect an agricultural operation.

Description of Changes to the Regulation

Subpart A—General Provisions

Section 1491.1 Applicability

Section 1491.1(a) is revised to update the effective date by removing the reference to ''May 16, 2003'' and inserting that cooperative agreements shall be administered under the regulations in effect at the time the cooperative agreement is signed. This change is necessary for administrative clarity because NRCS is administering active cooperative agreements that were entered into before passage of the 2008 Act. In addition, the word ''easements'' is removed from paragraph (a). The term ''easements'' is removed for administrative clarity because the terms and conditions in effect when the cooperative agreements were signed will determine the terms and conditions for a given easement.

Further, § 1491.1(a) is revised to change ''will'' to ''shall''. The change from ''will'' to ''shall'' is made throughout this regulation for consistency and to strengthen the understanding of the requirement, this change will not be referenced again in this preamble.

Section 1491.2 Administration

Section 1491.2, in paragraph (b)(4) is revised to clarify that a landowner's eligibility must be determined as well as the land eligibility and the eligibility of the entity that receives cost-share through FRPP to purchase the easement. Other non-substantive changes are included to improve readability

Section 1491.3 Definitions

The purpose of the definition section set forth at § 1491.3 is to ensure consistent interpretation by the public and NRCS personnel of the terms used throughout the regulation. Through this rulemaking, NRCS is amending portions of the definition section to implement 2008 Act changes as well as to provide consistency with other conservation programs when practicable.

The definition of ''Agriculture uses'' is amended to use more current and correct terminology, and to broaden the definition to reflect the new statutory program purposes. The definition in the 2003 rule linked to the state's purchase of development rights (PDR) program. The revised definition uses a more universal term, ''farm or ranch land protection program or equivalent.'' The definition is also revised to change the program purpose from protecting topsoil, the purpose of the 2002 Act, to ''protect agricultural use and related conservation uses'' as provided for in the 2008 Act. Additional non-substantive changes were made to improve readability.

The term ''Certified entities'' is added to conform to the new statutory requirement providing for an eligible entity certification process. Certification of ''eligible entities'' is discussed in the description of changes to § 1491.4.

The definition for ''contingent right'' is removed because the regulation no longer refers to the term.

The term ''Cooperative agreement'' is added to define the document that specifies the obligations and rights of NRCS and the eligible entities.

The term ''Dedicated fund'' is added and describes an account that can only be used for the purposes of management, monitoring, and enforcement of conservation easements. This requirement applies to non-governmental organizations wishing to become ''certified entities'' and serves as evidence of their capacity to ensure the long term protection of easements.

The definition of ''Eligible entities'' is revised to reflect the statutory change in the program's purpose and to remove language that is irrelevant to the new definition. The 2008 Act amended the definition of an eligible entity to add organizations that are described in paragraph (1) of section 509(a) of the Internal Revenue Code of 1986.

The definition of ''Eligible land'' is removed because the term is fully explained in § 1491.4(f).

The definition of ''Fair market value'' is amended to reflect the change in the statute regarding easement valuation methodology. NRCS will approve the use of either the Uniform Standards for Professional Appraisal Practice (USPAP) or the Uniform Appraisal Standards for Federal Land Acquisition (UASFLA) procedures by the eligible entity for determining ''fair market value.'' This decision is discussed further in this preamble where the agency addresses changes to § 1491.4(g).

The definition of ''Farm and ranchland of statewide importance'' is added to provide greater specificity to the existing umbrella term ''other productive soils.'' This new definition is more descriptive and technically correct than the current definition of this land type, which is subsumed in general term ''other productive soils.''

The definition of ''Farm and ranchland of local importance'' is added for the same reason discussed above under ''Farm and ranchland of statewide importance.''

The definition of ''Farm or ranch succession plan'' is changed to correct typographical errors in capitalization and lower case. The phrase ''Farm or Ranch Succession Plan is * * *'' is changed to ''Farm or Ranch Succession Plan means * * *'' for consistency purposes.

The definition of ''Field Office Technical Guide (FOTG)'' is revised to provide consistency with the way the term is defined in other NRCS program regulations.

The definition of ''Forest land'' is amended to delete the minimum acreage requirement for forest land. The 2008 Act provides that forest land is eligible providing it contributes to the economic viability of an agricultural operation or serves as a buffer to protect an agricultural operation from development. No minimum acreage enrollment levels were established in statute.

The term ''Forest management plan'' is added to define a newly established documentation requirement needed to demonstrate forest land eligibility, when the ''forest land'' is being enrolled under the ''contributes to the economic viability of the agricultural operation'' land eligibility category. NRCS is using the ''forest management plan'' as documentation of eligibility rather than requiring submission of receipts or tax returns, which may be viewed as intrusive. The definition is consistent with the way the term is defined in other NRCS program regulations.

The definition of Historical and archaeological resources is amended to include resources listed in the State Historic Preservation Officer or Tribal Historic Preservation Officer inventory with written justification as to why the resource meets National Register of Historic Places criteria. This change is made to more fully recognize preservation efforts of State, Tribal, and local preservation offices.

The definition of ''Imminent harm'' is amended to incorporate the change in statutory purpose of the program from protection of topsoil to protection of agricultural use and related conservation values. Other non-substantive changes are made to improve sentence structure and clarity.

The definition of ''Indian Tribe'' is updated to give the term the meaning provided in section 4(e) of the Indian Self-Determination and Education Assistance Act (25 U.S.C. 450(b)(e)). This definition is consistent with the way the term is defined for other NRCS easement programs.

The definition of ''landowner'' is amended to clarify that a landowner may be a ''person, legal entity, or Indian Tribe.'' The definition clarifies that State and local governments, and non-governmental organizations are not considered eligible landowners. This clarification was previously included in policy, but it was not included in the regulation.

The term ''Natural Resources Conservation Service'' is amended to more appropriately refer to the ''United States'' rather than ''U. S.'' and to denote ''NRCS'' as the defined acronym.

The definition of ''Non-governmental organization'' is amended in accordance with the 2008 Act to incorporate reference to organizations that are described in section 509(a)(1) of the Internal Revenue Code.

The definition of ''Other interests in land'' is amended to clarify that other interests are interests other than easements.

The definition of ''Other productive soils'' is amended to identify that the term is restricted to farm and ranch land soils that are considered ''unique farmland,'' and ''farm and ranch land of statewide and local importance.'' The terms ''unique farmland'', ''farm and ranch land of statewide importance'' and ''farm and ranch land of local importance'' are now defined separately rather than within the definition of ''other productive soils.'' The change was made to provide specific definitions for these types of land.

The definition of ''Prime and unique farmland'' is deleted and replaced with separate definitions for ''Prime farmland'' and ''Unique farmland.'' The change is made to improve the clarity and technical correctness of the definitions for these types of land.

The definition of ''Purchase price'' is added to provide for consistent use of the term in the regulation. ''Purchase price'' is the appraised fair market value of the easement minus the landowner donation. The definition of ''purchase price'' is essential to determining the entity's minimum contribution as provided for in the 2008 Act.

The term ''Right of enforcement'' is added to clarify that a right of enforcement is an interest in the land which the United States may exercise under specific circumstances to enforce the terms of the conservation easement. The exercise of this right is provided in the description of changes to § 1491.22.

The definition of ''Secretary'' is amended to more appropriately refer to the ''United States'' rather than the ''U. S.''.

The definition of ''State Technical Committee'' is changed to remove ''of the U.S. Department of Agriculture'' following the term ''Secretary'' to simplify the definition. The definition for the term ''Secretary'' already includes these words.

The definition of ''State Conservationist'' is updated to use the current terminology for the ''Pacific Island Area'' rather than ''Pacific Basin Area.''

As noted above, the term ''Unique farmland'' is added to improve clarity and provide a more technically accurate definition of this type of land than is described in the existing regulation under ''Prime and unique farmland.''

The term ''United States' rights'' is removed because the 2008 Act limited the Secretary's interest in FRPP funded easements to a right of enforcement which runs with the land. The term ''right of enforcement'' is defined in this section.

Section 1491.4 Program Requirements

Section 1491.4(a) is amended to incorporate the statutory requirement that NRCS provide funding for conservation easements or other interests in land versus acquiring a Federal interest in land; change the reference from the ''Secretary'' to ''Chief''; and to add the ''right of enforcement''. The ''right of enforcement'' is discussed further under the description of changes to § 1491.22. The 2008 Act changed the role of the Secretary to ''facilitate and provide funding for the purchase of conservation easements or other interests in eligible land'' rather than to directly purchase easements. Related changes are made to remove the requirement that the United States is named as a grantee on the deed and instead require that the United States' right of enforcement is noted in the opening paragraph of the deed that acknowledges the parties. The purpose for requiring this acknowledgement is to put the public on notice of the Federal right and to guard against condemnation of FRPP-funded deeds. Minor non-substantive changes are also made to improve readability.

Section 1491.4(b) is amended to add that in states that limit the term of the easement, the term of the easement must be the maximum allowed by State law.

Section 1491.4(c) is amended to make non-substantive changes to improve readability.

A new § 1491.4(d) is added, and subsequent paragraphs are re-designated, to address the requirements that an entity must meet to become a ''certified entity.'' The certification process was added by the 2008 Act as an option for entities. To meet the certification requirements established under the 2008 Act, NRCS is requiring that an entity demonstrate long-term and substantial experience directly with the FRPP program. This section also includes a requirement for the existence of a dedicated fund for non-governmental organizations, as described in the changes to § 1491.3. Section 1491.4(d)(1) includes the requirement that an entity have a demonstrated ability to complete timely acquisition of easements through compliance with the terms under previously executed FRPP cooperative agreements.

A new § 1491.4(e) is added to describe the provisions for review and revocation of certification included in the 2008 Act.

Section 1491.4(f), previously § 1491.4(d), is restructured to increase clarity and readability. Section 1491.4(f) is amended in paragraph (1) to combine the provisions of the former § 1491.4(d)(2) and certain provisions found in the ''eligible land'' definition in § 1491.3. Section 1491.4(f)(1) is also amended to add the new statutory eligibility land category identified as ''to further a State or local policy consistent with the purposes of the program.'' Section 1491.4(f)(2) is added to describe the type of agriculture land categories that are eligible for enrollment. This language was previously found in the definition of ''eligible land'' in § 1491.3, except that, the text in paragraph (f)(2) contains restrictions on forest land provided in the 2008 Act. Section § 1491.4(f)(3) is added to include language on incidental lands formerly found in the definition of ''eligible land''. Section 1491.4(f)(4), previously § 1491.4(d)(1), is revised to clarify that whole or part of a farm or ranch may be offered for enrollment. In § 1491.4(f)(5), NRCS is establishing a threshold for requiring the development of forest management plans. The threshold will be the greater of 10 acres of forest or 10 percent of the easement area in forest. Based on historical program

participation, NRCS estimates that this policy would have resulted in forest management plans on about 40 percent of the parcels enrolled in the program currently. Farms that are less than 100 acres in size with less than 10 acres of forest are not required to have a plan to be eligible. A forest management plan will help ensure that the Federal investment in an easement encompassing significant forest acreage will have long-term viability for food, fiber, and environmental benefits. The requirement also helps to ensure that these forest lands contribute to the viability of the agricultural operation as required by the 2008 Act.

Section 1491.4(f)(6), previously § 1491.4(d)(5), is revised to clarify that lands currently under ownership by an entity whose purpose is to protect agricultural uses and related conservation values are not eligible for the program. Lands owned by these entities are already protected. Exclusion of these lands will allow program investments to protect additional acreage. This provision is already included in the FRPP policy, and is now being incorporated into the regulation by this rulemaking.

Section 1491.4(f)(7), previously § 1491.4(d)(6), is amended to add the current regulatory Adjusted Gross Income (AGI) eligibility reference, non-substantive changes are made to improve clarity, and paragraphs are re-numbered as appropriate.

Section 1491.4(f)(8) is added to describe the on-site and off-site conditions that are not compatible with the program's purposes.

Section 1491.4(f)(9) is added to clarify that a landowner may submit an application on land on which the mineral estate is owned by someone other than the landowner (also referred to as a split estate), but that USDA reserves the right to determine the impacts of third party rights upon a potential easement and to deny funding where the purposes of the program cannot be achieved.

Section 1491.4(g), previously § 1491.4(e), is amended to define the industry-approved appraisal methods specified in the 2008 Act as the Uniform Standards of Professional Appraisal Practices (USPAP) or the Uniform Appraisal Standards for Federal Land Acquisition (UASFLA). USPAP and UASFLA are the guidelines that professional appraisers use for appraising properties. The entity may choose which of these methods they prefer to use. The 2008 Act specified that an appraisal would be used; therefore, administrative valuation processes which are used by some farm and ranchland protection programs will not be acceptable because they are not appraisal methodologies.

Section 1491.4(h), previously § 1491.4(f), is amended to clarify that a standard deed form may be required and is updated to reflect the passage of the 2008 Act by indicating that any standard form must meet the purposes of this part.

Section 1491(4)(i), previously § 1491.4(g), was not otherwise amended. Section 1491.4(i) contains the requirement that a landowner must meet the payment eligibility requirements of 7 CFR part 12.

Section 1491.5 Application Procedures

The text of the existing section is deleted in its entirety and replaced with a new application process. Section 1491.5(a) establishes that an entity must submit an application to the State Conservationist in the State where the parcels are located. Section 1491.5(b) provides that the Chief will determine whether an eligible entity qualifies as a certified entity based on the criteria in § 1491.4(d) and in the NRCS national FRPP database.

Section 1491.5(c) indicates that the State Conservationist will notify the entity about whether or not the entity has been determined to be eligible or certified.

Section 1491.5 (d) clarifies that an entity with an established cooperative agreement will not need to submit an annual application in response to an RFP, but that the entity may re-apply when their cooperative agreement expires. NRCS determined, based on experience administering other easement programs, that FRPP can be implemented using a continuous signup process. This process provides better service to agency clients because applications can be submitted in accordance with their own schedule. Clients do not have to wait for a **Federal Register** publication. It also reduces administrative burden for the agency.

Section 1491.5(e) identifies that the new application process will allow continuous sign-up, which is consistent with other conservation programs. The State Conservationist will announce periodic ranking dates no less than 60 days before the date of the ranking. The process will allow certified and non-certified eligible entities to compete under the same application and ranking process. NRCS has decided to have certified and non-certified entities participate similarly in the program to simplify the application process and allow parcels to compete on equal resource-based terms, regardless of the status of the entity.

To eliminate confusion and miscommunication on the status of non-selected parcels at the end of each fiscal year, § 1491.5(f) provides that NRCS will purge the unfunded parcels from the application list on September 30 of each year unless the entity requests that the parcels be considered for funding in the next fiscal year. If an entity fails to request that their parcels be retained on the list, a new list of parcels must be submitted for consideration each year. This process will allow NRCS State Offices to purge their lists of parcels that may have dropped their applications or were funded with other sources, and eliminate confusion for entities regarding the status of their existing applications.

Section 1491.6 Ranking Considerations and Proposal Selection

The existing section is deleted and replaced by a new ranking process. Section 1491.6(a) establishes that prior to scoring and ranking parcels for funding, NRCS must evaluate the eligibility of both the landowner and the land. Section 1491.6(b) of this section establishes that such parcels will be ranked according to both National and State criteria. Within the State ranking criteria, the National criteria must comprise at least half of the available ranking points. Section 1491.6(c) identifies that State Conservationists will establish and announce a date for ranking the applications that were accepted and scored in the continuous signup. Section 1491.6(d) states that applications from certified entities and non-certified entities will be ranked together and not separately so that the parcels submitted compete equally.

Section 1491.6(e) provides that parcels selected for funding will be included in the cooperative agreements signed by both NRCS and the entity; that funds for each fiscal year will be obligated through an amendment signed by both parties to the existing cooperative agreement; and that the amendment will identify the closing and payment reimbursement deadline applicable to each funding year's parcels.

Paragraph (f) sets forth the national ranking criteria. The national ranking criteria are changed to reflect site (parcel)-specific criteria rather than entity performance criteria and language has been added to clarify that the national requirements are mandatory for inclusion in the state ranking. The national criteria set forth in the 2003 Rule included information in the State FRPP plans, and criteria on eligible entities regarding their histories of protecting farms and ranches. These

criteria did not include parcel specific criteria; however, it is the individual parcels that are being rated and ranked. Therefore, these changes are made because the use of the new factors provides a more quantifiable resource-based ranking of individual parcels.

In addition, in order to clarify and streamline their use, funding priorities set forth in the existing § 1491.7 are being incorporated into the new national and the state funding criteria established by this rulemaking in § 1491.6(f) and (g). In the ''other protected land'' criteria set forth at § 1491.6(f)(7), this rulemaking adds a reference to military installations to emphasize the USDA partnership with the Department of Defense under its buffer program.

Section 1491.6(g) identifies the type of criteria that a State Conservationist, with advice of the State Technical Committee, may include. The State ranking criteria may address the viability of the parcel for agriculture into the future, the landowner's willingness to grant public access for recreational purposes, and the performance of the entity. Because the leveraging factors may skew the ranking of individual parcels and the other factors set forth in the existing regulation are not relevant to individual parcels, the State ranking criteria is being changed by this rulemaking to eliminate criteria related to the type of farm, the maximum amount of Federal funding required per acre, the percent leveraging, and an entity's history of assisting beginning farmers and ranchers. Funding priorities from the former § 1491.7, however, were incorporated as possible State factors.

Section 1491.6(h), previously § 1491.6(b), provides that the State ranking criteria will be developed on a State-by-State basis. However, it removes the language in § 1491.6(b) that recommends interested entities request ranking criteria from the State Conservationist. This language is replaced with a provision that requires NRCS State Conservationists to make available the full listing of National and State ranking criteria. Section 1491.6(i) is removed because the purpose of (i) is addressed with the changes in § 1491.4 (g).

Section 1491.7 Funding Priorities

Section 1491.7 is deleted and its elements incorporated in § 1491.6 as noted above to improve the structure of the regulation.

Subpart B—Cooperative Agreements and Conservation Easement Deeds

Section 1491.20 Cooperative Agreements

Section 1491.20(a) is amended to reflect changes to the contents of cooperative agreements that are necessitated by the 2008 Act, including the change that FRPP funds are used to assist eligible entities with the purchase of rights in land rather than to purchase these rights directly by the United States. To implement 2008 Act statutory changes, the following additions have been made to this section: requirements of the easement deed, management and enforcement requirements, the responsibilities of NRCS, the responsibilities of the eligible entity, the ability to substitute parcels by mutual agreement, and other requirements deemed necessary by NRCS. These issues have been addressed in the cooperative agreements since 1996, but their presence in the cooperative agreements has never been required by regulation. These issues are included in this regulation to inform the eligible entities what their responsibilities are in the agreement and list the responsibilities of NRCS. Other non-substantive changes were made to paragraph (a) to improve its readability.

A new § 1491.20(b) is added which sets forth the new statutory requirement that the terms of agreements be a minimum of five years for certified entities and three years for other eligible entities.

The existing § 1491.20(b) is being redesignated as § 1491.20(c) and is amended to require that the list of parcels funded under a cooperative agreement include the acreage, the estimated fair market value of the parcel, and the FRPP contribution amount. The requirement for a location map is being removed from the existing regulation, but such information may be still required as a matter of policy under the category of ''other relevant information''.

Section 1491.21 Funding

Section 1491.21(a) is amended to reflect that NRCS may share the cost of an interest in land, and not just the cost of a conservation easement. Section 1491.21(b) incorporates the 2008 Act change that the minimum entity cost-share to be an amount that is not less than 25 percent of the acquisition purchase price. As discussed above in the changes to the definitions section, ''purchase price'' is defined as the fair market value of the easement less the landowner's contribution. Section 1491.21(c) authorizes landowner donations without restrictions. The previous rule limited landowner donations to 25 percent. Section 1491.21(d) includes the requirement that the entity must provide a minimum of 25 percent of the purchase price of the conservation easement. Section 1491.21(e) remains unchanged. Section 1491.21(f) emphasizes that a State Conservationist shall not assign a higher priority to any easement solely based on its lesser cost to FRPP.

Section 1491.21(g) is added to affirm that NRCS asserts no direct or indirect interests to environmental credits associated with an easement purchased in part with FRPP funds.

Section 1491.22 Conservation Easement Deeds

Section 1491.22(b) is amended to clarify that easements in States where State law prohibits permanent easements shall be of the maximum duration allowed by state law. The 2008 Act requires that entities may use their own terms and conditions of conservation easement deeds, provided that such terms and conditions meet the minimum requirements set forth in the statute and are approved by the Secretary. Consequently, this rulemaking amends § 1491.22(c) to provide that eligible entities may use their own easement deeds when the deed form to be used for its land transactions under the cooperative agreement has been submitted to and approved by NRCS in advance.

In accordance with the 2008 Act change made to the property interest acquired by the United States in FRPP funded easements, this rulemaking deletes the language of the existing § 1491.22(d), which requires the United States to be named a grantee on FRPP funded easements.

New language is set forth in § 1491.22(d) incorporating the 2008 Act requirement that the Secretary shall require the inclusion of a ''contingent right of enforcement'' for the Secretary in the terms of the conservation easement deed. Because this right is new in the 2008 Act and is not a standard real property term, NRCS has carefully considered its meaning while promulgating this rule. Specifically, NRCS interpreted the plain meaning of the statutory language, considered the legislative history, and consulted with the Office of the General Counsel for the Department.

The purpose of the right is to ensure that the easement is enforced and that the Federal investment is protected. The FRPP statute requires that the easement deed include a contingent right of enforcement. Given the requirement for

inclusion of a contingent right of enforcement in the terms of the deed, the Agency has determined that it is Congress' intent that such a right run with the land for the duration of the easement.

The only legislative history discussing the nature of the contingent right of enforcement is found in the Manager's Report for FRPP. Here the Managers indicated that Congress did not want the contingent right of enforcement considered an acquisition of real property. The House version of FRPP included specific statutory language stating that the contingent right of enforcement was not a real property acquisition. However, Congress adopted the Senate version (with amendment), which did not include this language.

NRCS has concluded that it cannot accomplish the intent of the Managers as reflected in the legislative history regarding the effect of ''contingent right of enforcement'' and give meaning to the plain statutory language of FRPP. This is because when an interest is to run with the land, it constitutes a real property right. The agency has considered other theories, including contractual and constitutional authority under the Spending Clause, but none provide a sufficient legal justification for the Secretary to enforce the terms of the easement for its duration against subsequent landowners. Consequently, the Agency has concluded that the contingent right of enforcement as used in FRPP means a vested real property right, which provides the Secretary, on behalf of the United States, the right to enforce the terms of the easement for the duration of the easement. In addition, because the United States has a vested real property right in FRPP easements, i.e., its right of enforcement, the easement cannot be condemned by state or local government, thereby providing further protection of the easement and the federal investment.

Finally, the Agency is interpreting the term ''contingent'' in ''contingent right of enforcement'' to mean that the Secretary exercises that right under certain circumstances, not that the right itself is contingent. Consequently, to prevent confusion over the scope of right, the Agency is referring to its enforcement right as a ''right of enforcement.'' The definition clarifies that this right is only exercised under certain circumstances. Section 1491.22(d) is changed to provide information about the United State's right of enforcement. Specifically, the paragraph provides that the conveyance document must include the right of enforcement as set forth in the FRPP cooperative agreement, it identifies when the United States may exercise this right and it explains that the right is a vested interest in real property and cannot be condemned by State or local governments. Section 1491.22(e) is amended to remove the requirement for conservation districts to approve the conservation plan, as this is not always consistent with local practice. The change still gives NRCS the ability to work through local conservation districts in the development of conservation plans. The requirement that NRCS sign the deed accepting its terms is incorporated at § 1491.22(g) for administrative clarity.

Section 1491.22(i) retains the impervious surface limit of 2%, but is amended to increase the impervious surface waiver to up to 10% from the existing policy of 6%. This change is possible because the statute was amended to eliminate the protection of topsoil as the primary purpose of the program. This impervious surface limit should be adequate to allow for various types of agricultural needs in different regions, while providing an adequate protection against destruction of agricultural soil resources and other conservation values associated with agricultural land such as open space.

The indemnification language previously located in § 1491.30(d) is moved to § 1491.22(j) because this language describes a deed requirement and is appropriately placed in this section.

Section 1491.22(k) is added to require that any conservation easement deed include a clause which addresses amendments to its terms. In particular, § 1491.22(k) requires that any amendment be consistent with the purposes of the conservation easement and with FRPP. This paragraph replaces the provisions previously found in § 1491.23.

Section 1491.23 is removed since the United States is no longer a grantee under the terms of the conservation easements acquired with FRPP funds. Therefore, modifications to the terms of the conservation easement will be handled through an amendment clause required under § 1491.22(k).

Subpart C—General Administration

Section 1491.30 Violations and Remedies

Section 1491.30(b) and (f) are revised to incorporate the changes to the nature of the Federal right. The former section 1491.30(e) is moved to § 1491.22 as described above. Subsequent sections are re-numbered. Section 1491.30(d) clarifies that any cost recoveries levied by NRCS will be directed to the cooperating entity, not the specific landowner.

Section 1491.31 Appeals

Section 1491.31(a) is changed by replacing the term ''cooperating entity'' with the term ''eligible entity'' to refer to potential FRPP participants. The term ''cooperating entity'' is no longer used. Section 1491.31(b) is changed to add the term ''of eligible entity'' after the term ''person'' to ensure the public understands that all participants have the same rights. Paragraph (b) is further changed to refer to ''administrative action'' rather than ''any action taken under this part''. Only administrative actions are appealable. Last, paragraph (b) is changed to provide that no decision shall be a final Agency action except a decision of the Chief of NRCS. The words ''Chief of NRCS'' replace the words ''U.S. Department of Agriculture''. Paragraph (c) is added to further clarify that once an easement is recorded, enforcement actions taken by NRCS are not subject to review under administrative appeal regulations. This language is consistent with the appeal regulations at 7 CFR part 614, 7 CFR part 11, and Federal real property law.

Section 1491.32 Scheme and Device

The text of Section 1491.32 is revised by replacing ''Secretary'' with ''NRCS''.

Section 2708, ''Compliance and Performance'', of the 2008 Act added a paragraph to section 1244(g) of the 1985 Act entitled, ''Administrative Requirements for Conservation Programs,'' which states the following:

''(g) Compliance and performance.—For each conservation program under Subtitle D, the Secretary shall develop procedures—

(1) To monitor compliance with program requirements;

(2) To measure program performance;

(3) To demonstrate whether long-term conservation benefits of the program are being achieved;

(4) To track participation by crop and livestock type; and

(5) To coordinate activities described in this subsection with the national conservation program authorized under section 5 of the Soil and Water Resources Conservation Act of 1977 (16 U.S.C. 2004).''

This new provision presents in one place the accountability requirements placed on the Agency as it implements conservation programs and reports on program results. The requirements apply to all programs under Subtitle D, including the Wetlands Reserve program, the Conservation Security Program, the Conservation Stewardship Program, the Farm and Ranch Lands

Protection Program, the Grassland Reserve Program, the Environmental Quality Incentives Program (including the Agricultural Water Enhancement Program), the Wildlife Habitat Incentive Program, and the Chesapeake Bay Watershed initiative. These requirements are not directly incorporated into these regulations, which set out requirements for program participants. However, certain provisions within these regulations relate to elements of section 1244(g) of the 1985 Act and the Agency's accountability responsibilities regarding program performance. NRCS is taking this opportunity to describe existing procedures that relate to meeting the requirements of section 1244(g) of the 1985 Act, and Agency expectations for improving its ability to report on each program's performance and achievement of long-term conservation benefits. Also included is reference to the sections of these regulations that apply to program participants and that relate to the Agency accountability requirements as outlined in section 1244(g) of the 1985 Act.

Monitor compliance with program requirements. NRCS has established application procedures to ensure that participants meet eligibility requirements, and follow-up procedures to ensure that participants are complying with the terms and conditions of their contractual arrangement with the government and that the installed conservation measures are operating as intended. These and related program compliance evaluation policies are set forth in Agency guidance (440 CPM_519) (*http://directives.sc.egov.usda.gov/*).

The program requirements applicable to participants that relate to compliance are set forth in these regulations in § 1491.4, ''Program Requirements'', § 1491.22, ''Conservation Easement Deeds'', and § 1491.30, ''Violations and remedies''. These sections make clear the general program participant and entity obligations, the terms and conditions of the conservation easement, and the ramifications of noncompliance. Pursuant to the requirements of the Government Performance and Results Act of 1993 (Pub. L. 103–62, Sec. 1116) and guidance provided by OMB Circular A–11, NRCS has established performance measures for its conservation programs. Program-funded conservation activity is captured through automated field-level business tools and the information is made publicly available at: *http://ias.sc.egov.usda.gov/PRSHOME/*. Program performance also is reported annually to Congress and the public through the annual performance budget, annual accomplishments report and the USDA Performance Accountability Report. Related performance measurement and reporting policies are set forth in Agency guidance (GM_340_401 and GM_340_403) (*http://directives.sc.egov.usda.gov/*).

The actions undertaken by eligible entities and participants are the basis for measuring program performance—specific actions are tracked and reported annually, while the effects of those actions relate to whether the long-term benefits of the program are being achieved. The program requirements applicable to participants and eligible entities that relate to undertaking conservation actions are set forth in these regulations in § 1491.4, ''Program Requirements,'' § 1491.20, ''Cooperative Agreements,'' and § 1491.22 ''Conservation Easement Deeds''.

Demonstrate whether long-term conservation benefits of the program are being achieved. Demonstrating the long-term natural resource benefits achieved through conservation programs is subject to the availability of needed data, the capacity and capability of modeling approaches, and the external influences that affect actual natural resource condition. While NRCS captures many measures of ''output'' data, such as acres of conservation practices, it is still in the process of developing methods to quantify the contribution of those outputs to environmental outcomes NRCS currently uses a mix of approaches to evaluate whether long-term conservation benefits are being achieved through its programs. Since 1982, NRCS has reported on certain natural resource status and trends through the National Resources Inventory (NRI), which provides statistically reliable, nationally consistent land cover/use and related natural resource data. However, lacking has been a connection between these data and specific conservation programs. In the future, the interagency Conservation Effects Assessment Project (CEAP), which has been underway since 2003, will provide nationally consistent estimates of environmental effects resulting from conservation practices and systems applied. CEAP results will be used in conjunction with performance data gathered through Agency field-level business tools to help produce estimates of environmental effects accomplished through Agency programs, such as WRP. In 2006 a Blue Ribbon panel evaluation of CEAP strongly endorsed the project's purpose, but concluded ''CEAP must change direction'' to achieve its purposes. In response, CEAP has focused on priorities identified by the Panel and clarified that its purpose is to quantify the effects of conservation practices applied on the landscape. Information regarding CEAP, including reviews and current status is available at (*http://www.nrcs.usda.gov/technical/NRI/ceap/*. Since 2004 and the initial establishment of long-term performance measures by program, NRCS has been estimating and reporting progress toward long-term program goals. Natural resource inventory and assessment, and performance measurement and reporting policies set forth in Agency guidance (GM_290_400; GM_340_401; GM_340_403) (*http://directives.sc.egov.usda.gov/*).

Demonstrating the long-term conservation benefits of conservation programs is an Agency responsibility. Through CEAP, NRCS is in the process of evaluating how these long-term benefits can be achieved through the conservation practices and systems applied by participants under the program. The program requirements applicable to participants that relate to producing long-term conservation benefits are described previously under ''measuring program performance.''

Track participation by crop and livestock type. NRCS' automated field-level business tools capture participant, land, and operation information. This information is aggregated in the National Conservation Planning database and is used in a variety of program reports. Additional reports will be developed to provide more detailed information on program participation to meet congressional needs. These and related program management procedures supporting program implementation are set forth in Agency guidance (440 CPM 519).

The program requirements applicable to participants that relate to tracking participation by crop and livestock type are put forth in these regulations in § 1491.4, ''Program Requirements,'' which makes clear program eligibility requirements, including the requirement to provide NRCS the information necessary to implement WRP.

Coordinate these actions with the national conservation program authorized under the Soil and Water Resources Conservation Act (RCA). The 2008 Act reauthorized and expanded on a number of elements of the RCA related to evaluating program performance and conservation benefits. Specifically, the 2008 Farm Bill added a provision stating, ''Appraisal and inventory of resources, assessment and inventory of conservation needs, evaluation of the effects of conservation practices, and analyses of alternative approaches to

existing conservation programs are basic to effective soil, water, and related natural resources conservation.''

The program, performance, and natural resource and effects data described previously will serve as a foundation for the next RCA, which will also identify and fill, to the extent possible, data and information gaps. Policy and procedures related to the RCA are set forth in Agency guidance (GM_290_400; M_440_525; GM_130_402)(*http://directives.sc.egov.usda.gov/*).

The coordination of the previously described components with the RCA is an Agency responsibility and is not reflected in these regulations. However, it is likely that results from the RCA process will result in modifications to the program and performance data collected, to the systems used to acquire data and information, and potentially to the program itself. Thus, as the Secretary proceeds to implement the RCA in accordance with the statute, the approaches and processes developed will improve existing program performance measurement and outcome reporting capability and provide the foundation for improved implementation of the program performance requirements of section 1244(g) of the 1985 Act.

List of Subjects in 7 CFR 1491

Administrative practice and procedure, Agriculture, Soil conservation.

■ For the reasons stated in the preamble, the Commodity Credit Corporation revises 7 CFR part 1491 to read as follows:

PART 1491—FARM AND RANCH LANDS PROTECTION PROGRAM

Subpart A—General Provisions

Sec.

1491.1 Applicability.
1491.2 Administration.
1491.3 Definitions.
1491.4 Program requirements.
1491.5 Application procedures.
1491.6 Ranking considerations and proposal selection.

Subpart B—Cooperative Agreements and Conservation Easement Deeds

1491.20 Cooperative agreements.
1491.21 Funding.
1491.22 Conservation easement deeds.

Subpart C—General Administration

1491.30 Violations and remedies.
1491.31 Appeals.
1491.32 Scheme or device.

Authority: 16 U.S.C. 3838h–3838i.

Subpart A—General Provisions

§ 1491.1 Applicability.

(a) The regulations in this part set forth requirements, policies, and procedures, for implementation of the Farm and Ranch Lands Protection Program (FRPP) as administered by the Natural Resources Conservation Service (NRCS). FRPP cooperative agreements shall be administered under the regulations in effect at the time the cooperative agreement is signed.

(b) The NRCS Chief may implement FRPP in any of the 50 States, the District of Columbia, the Commonwealth of Puerto Rico, Guam, the Virgin Islands of the United States, American Samoa, and the Commonwealth of the Northern Mariana Islands.

§ 1491.2 Administration.

(a) The regulations in this part shall be administered under the general supervision and direction of the NRCS Chief.

(b) NRCS shall—

(1) Provide overall program management and implementation leadership for FRPP;

(2) Develop, maintain, and ensure that policies, guidelines, and procedures are carried out to meet program goals and objectives;

(3) Ensure that the FRPP share of the cost of an easement or other deed restrictions in eligible land shall not exceed 50 percent of the appraised fair market value of the conservation easement;

(4) Determine eligibility of the land, the landowner, and the entity;

(5) Ensure a conservation plan is developed in accordance with 7 CFR part 12;

(6) Make funding decisions and determine allocations of program funds;

(7) Coordinate with the Office of the General Counsel (OGC) to ensure the legal sufficiency of the cooperative agreement and the easement deed or other legal instrument;

(8) Sign and monitor cooperative agreements for the CCC with the selected entity;

(9) Monitor and ensure conservation plan compliance with highly erodible land and wetland provisions in accordance with 7 CFR part 12; and

(10) Provide leadership for establishing, implementing, and overseeing administrative processes for easements, easement payments, and administrative and financial performance reporting.

(c) NRCS shall enter into cooperative agreements with eligible entities to assist NRCS with implementation of this part.

§ 1491.3 Definitions.

The following definitions will apply to this part and all documents issued in accordance with this part, unless specified otherwise:

Agricultural uses are defined by the State's farm or ranch land protection program or equivalent, or where no program exists, agricultural uses should be defined by the State agricultural use tax assessment program. (If NRCS finds that a State definition of agriculture is so broad that an included use could lead to the degradation of soils and agriculture productivity, NRCS reserves the right to impose greater deed restrictions on the property than allowable under that State definition of agriculture in order to protect agricultural use and related conservation values.)

Certified entity means an eligible entity that NRCS has determined to meet the requirements of § 1491.4(d) of this part.

Chief means the Chief of NRCS, USDA.

Commodity Credit Corporation (CCC) is a Government-owned and operated entity that was created to stabilize, support, and protect farm income and prices. CCC is managed by a Board of Directors, subject to the general supervision and direction of the Secretary of Agriculture, who is an ex-officio director and chairperson of the Board. CCC provides the funding for FRPP, and NRCS administers FRPP on its behalf.

Conservation Easement means a voluntary, legally recorded restriction, in the form of a deed, on the use of property, in order to protect resources such as agricultural lands, historic structures, open space, and wildlife habitat.

Conservation Plan is the document that—

(1) Applies to highly erodible cropland;

(2) Describes the conservation system applicable to the highly erodible cropland and describes the decisions of the person with respect to location, land use, tillage systems, and conservation treatment measures and schedules;

(3) Is approved by the local soil conservation district in consultation with the local committees established under Section 8(b)(5) of the Soil Conservation and Domestic Allotment Act (16 U.S.C. 5909h(b)(5)) and the Secretary, or by the Secretary.

Cooperative agreement means the document that specifies the obligations and rights of NRCS and eligible entities participating in the program.

Dedicated fund means an account held by an eligible entity sufficiently

capitalized for the purpose of covering expenses associated with the management, monitoring, and enforcement of conservation easements and where such account cannot be used for other purposes.

Eligible entity means federally recognized Indian Tribes, State, unit of local government, or a non-governmental organization, which has a farmland protection program that purchases agricultural conservation easements for the purpose of protecting agriculture use and related conservation values by limiting conversion to non-agricultural uses of the land.

Fair market value means the value of a conservation easement as ascertained through standard real property appraisal methods, as established in § 1491.4(g).

Farm and ranch land of statewide importance means, in addition to prime and unique farmland, land that is of statewide importance for the production of food, feed, fiber, forage, bio-fuels, and oil seed crops. Criteria for defining and delineating this land are to be determined by the appropriate State agency or agencies. Generally, additional farmlands of statewide importance include those that are nearly prime farmland and that economically produce high yields of crops when treated and managed according to acceptable farming methods. Some may produce as high a yield as prime farmlands if conditions are favorable. In some States, additional farmlands of statewide importance may include tracts of land that have been designated for agriculture by State law in accordance with 7 CFR part 657.

Farm and ranch land of local importance means farm or ranch land used to produce food, feed, fiber, forage, bio-fuels, and oilseed crops, that are not identified as having national or statewide importance. Where appropriate, these lands are to be identified by the local agency or agencies concerned. Farmlands of local importance may include tracts of land that have been designated for agriculture by local ordinance.

Farm or Ranch Succession Plan means a general plan to address the continuation of some type of agricultural business on the conserved land; the farm or ranch succession plan may include specific intra-family succession agreements or strategies to address business asset transfer planning to create opportunities for beginning farmers and ranchers.

Field Office Technical Guide (FOTG) means the official local NRCS source of resource information and interpretations of guidelines, criteria, and requirements for planning and applying conservation practices and conservation management systems. The FOTG contains detailed information on the conservation of soil, water, air, plant, and animal resources applicable to the local area for which it is prepared.

Forest land means a land cover or use category that is at least 10 percent stocked by single-stemmed woody species of any size that will be at least 13 feet tall at maturity. Also included is land bearing evidence of natural regeneration of tree cover (cutover forest or abandoned farmland) that is not currently developed for non-forest use. Ten percent stocked, when viewed from a vertical direction, equates to an aerial canopy cover of leaves and branches of 25 percent or greater.

Forest management plan means a site-specific plan that is prepared by a professional resource manager, in consultation with the participant, and is approved by the State Conservationist. Forest management plans may include a forest stewardship plan, as specified in section 5 of the Cooperative Forestry Assistance Act of 1978 (16 U.S.C. 2103a); another practice plan approved by the State Forester; or another plan determined appropriate by the State Conservationist. The plan complies with applicable Federal, State, Tribal, and local laws, regulations and permit requirements.

Historical and archaeological resources mean resources that are:

(1) Listed in the National Register of Historic Places (established under the National Historic Preservation Act (NHPA), 16 U.S.C. 470, *et seq.*),

(2) Formally determined eligible for listing in the National Register of Historic Places (by the State Historic Preservation Officer (SHPO) or Tribal Historic Preservation Officer (THPO) and the Keeper of the National Register in accordance with section 106 of the NHPA),

(3) Formally listed in the State or Tribal Register of Historic Places of the SHPO (designated under section 101(b)(1)(B) of the NHPA) or the THPO (designated under section 101(d)(1)(C) of the NHPA), or

(4) Included in the SHPO or THPO inventory with written justification as to why it meets National Register of Historic Places criteria.

Imminent harm means easement violations or threatened violations that, as determined by the Chief, would likely cause immediate and significant degradation to the conservation values; for example, those violations that would adversely impact agriculture use, productivity, and related conservation values or result in the erosion of topsoil beyond acceptable levels as established by NRCS.

Indian Tribe means any Indian tribe, band, nation, or other organized group or community, including any Alaska Native village or regional or village corporation as defined in or established pursuant to the Alaska Native Claims Settlement Act, 43 U.S.C. 1601 *et seq.*, which is recognized as eligible for the special programs and services provided by the United States to Indians because of their status as Indians (25 U.S.C. 450(b)(e)).

Land Evaluation and Site Assessment System (LESA) means the land evaluation system approved by the NRCS State Conservationist used to rank land for farm and ranch land protection purposes, based on soil potential for agriculture, as well as social and economic factors, such as location, access to markets, and adjacent land use. (For additional information see the Farmland Protection Policy Act rule at 7 CFR part 658.)

Landowner means a person, legal entity, or Indian Tribe having legal ownership of land, and those who may be buying eligible land under a purchase agreement. The term ''landowner'' may include all forms of collective ownership including joint tenants, tenants-in-common, and life tenants. State governments, local governments, and non-governmental organizations that qualify as eligible entities are not eligible as landowners.

Natural Resources Conservation Service (NRCS) means an agency of the United States Department of Agriculture.

Non-governmental organization means any organization that:

(1) Is organized for, and at all times since the formation of the organization, has been operated principally for one or more of the conservation purposes specified in clause (i), (ii), (iii), or (iv) of section 170(h)(4)(A) of the Internal Revenue Code of 1986;

(2) Is an organization described in section 501(c)(3) of that Code that is exempt from taxation under 501(a) of that Code; and

(3) Is described—

(i) In section 509(a)(1) and (2) of that Code; or

(ii) Is described in section 509(a)(3) of that Code and is controlled by an organization described in section 509(a)(2) of that Code.

Other interests in land include any right in real property other than easements that are recognized by State law. FRPP funds shall only be used to purchase other interests in land with prior approval from the Chief.

Other productive soils means farm and ranch land soils, in addition to prime farmland soils that include unique farmland and farm and ranch land of statewide and local importance.

Pending offer means a written bid, contract, or option extended to a landowner by an eligible entity to acquire a conservation easement before the legal title to these rights has been conveyed for the purpose of limiting non-agricultural uses of the land.

Prime farmland means land that has the best combination of physical and chemical characteristics for producing food, feed, fiber, forage, oilseed, and other agricultural crops with minimum inputs of fuel, fertilizer, pesticides, and labor, without intolerable soil erosion, as determined by the Secretary.

Purchase price means the appraised fair market value of the easement minus the landowner donation.

Right of enforcement means an interest in real property set forth in the conservation easement deed, equal in scope to the right of inspection and enforcement granted to the grantee, that the United States Government may exercise under specific circumstances in order to enforce the terms of the conservation easement.

Secretary means the Secretary of the United States Department of Agriculture.

State Technical Committee means a committee established by the Secretary in a State pursuant to 16 U.S.C. 3861 and 7 CFR part 610, subpart C.

State Conservationist means the NRCS employee authorized to direct and supervise NRCS activities in a State, the Caribbean Area (Puerto Rico and the Virgin Islands), or the Pacific Island Area (Guam, American Samoa, and the Commonwealth of the Northern Mariana Islands).

Unique farmland means land other than prime farmland that is used for the production of specific high-value food and fiber crops, as determined by the Secretary. It has the special combination of soil quality, location, growing season, and moisture supply needed to economically produce sustained high quality or high yields of specific crops when treated and managed according to acceptable farming methods. Examples of such crops include citrus, tree nuts, olives, cranberries, fruits, and vegetables. Additional information on the definition of prime, unique, or other productive soil can be found in 7 CFR part 657 and 7 CFR part 658.

§ 1491.4 Program requirements.

(a) Under FRPP, the Chief, on behalf of CCC, shall provide funding for the purchase of conservation easements or other interests in eligible land that is subject to a pending offer from an eligible entity for the purpose of protecting the agricultural use and related conservation values of the land by limiting nonagricultural uses of the land. Eligible entities submit applications to NRCS State Offices to partner with NRCS to acquire conservation easements on farm and ranch land. NRCS enters into cooperative agreements with selected entities and provides funds for up to 50 percent of the fair market value of the easement. In return, the entity agrees to acquire, hold, manage, and enforce the easement. A Federal right of enforcement must also be included in each FRPP funded easement deed for the protection of the Federal investment.

(b) The term of all easements shall be in perpetuity unless prohibited by State law. In states that limit the term of the easement, the term of the easement must be the maximum allowed by State law.

(c) To be eligible to receive FRPP funding, an entity must meet the definition of ''eligible entity'' as listed in § 1491.3. In addition, eligible entities interested in receiving FRPP funds must demonstrate:

(1) A commitment to long-term conservation of agricultural lands;

(2) A capability to acquire, manage, and enforce easements;

(3) Sufficient number of staff dedicated to monitoring and easement stewardship; and

(4) The availability of funds.

(d) To be eligible as a ''certified entity,'' an entity must be qualified to be an ''eligible entity'' and have demonstrated, as determined by the Chief:

(1) The ability to complete acquisition of easements in a timely fashion;

(2) The ability to monitor easements on a regular basis;

(3) The ability to enforce the provisions of easement deeds;

(4) Experience enrolling parcels in the Farm and Ranch Lands Protection Program (FRPP) or the Farmland Protection Program (FPP);

(5) For non-governmental organizations, the existence of a dedicated fund for the purposes of easement management, monitoring, and enforcement where such fund is sufficiently capitalized in accordance with NRCS standards. The dedicated fund must be dedicated to the purposes of managing, monitoring, and enforcing each easement held by the eligible entity; and

(6) Other certification criteria, including having a plan for administering easements enrolled under this part, as determined by the Chief.

(e) Review and Revocation of Certification.

(1) The Chief shall conduct a review of certified entities every three years to ensure that the certified entities are meeting the certification criteria established in § 1491.4(d).

(2) If the Chief finds that the certified entity no longer meets the criteria in § 1491.4(d), the Chief may:

(i) Allow the certified entity a specified period of time, at a minimum 180 days, in which to take such actions as may be necessary to meet the criteria; and

(ii) Revoke the certification of the entity, if after the specified period of time, the certified entity does not meet the criteria established in § 1491.4(d).

(f) Eligible land:

(1) Must be privately owned land on a farm or ranch and contain at least 50 percent prime, unique, Statewide, or locally important farmland, unless otherwise determined by the State Conservationist; contain historical or archaeological resources; or furthers a State or local policy consistent with the purposes of the program; and is subject to a pending offer by an eligible entity;

(2) Must be cropland, rangeland, grassland, pasture land, or forest land that contributes to the economic viability of an agricultural operation or serves as a buffer to protect an agricultural operation from development;

(3) May include land that is incidental to the cropland, rangeland, grassland, pasture land, or forest land if the incidental land is determined by the Secretary to be necessary for the efficient administration of a conservation easement;

(4) May include parts of or entire farms or ranches;

(5) Must not include forest land of greater than two-thirds of the easement area. Forest land that exceeds the greater of 10 acres or 10 percent of the easement area shall have a forest management plan before closing;

(6) NRCS shall not enroll land in FRPP that is owned in fee title by an agency of the United States, a State or local government, or by an entity whose purpose is to protect agricultural use and related conservation values, including those listed in the statute under eligible land, or land that is already subject to an easement or deed restriction that limits the conversion of the land to nonagricultural use, unless otherwise determined by the Chief;

(7) Must be owned by landowners who certify that they do not exceed the adjusted gross income limitation

eligibility requirements set forth in part 1400 of this title;

(8) Must possess suitable on-site and off-site conditions which will allow the easement to be effective in achieving the purposes of the program. Suitability conditions may include, but are not limited to, hazardous substances on or in the vicinity of the parcel, land use surrounding the parcel that is not compatible with agriculture, and highway or utility corridors that are planned to pass through or immediately adjacent to the parcel; and

(9) May be land on which gas, oil, earth, or other mineral rights exploration has been leased or is owned by someone other than the applicant may be offered for participation in the program. However, if an applicant submits an offer for an easement project, USDA will assess the potential impact that the third party rights may have upon achieving the program purposes. USDA reserves the right to deny funding for any application where there are exceptions to clear title on any property.

(g) Prior to FRPP fund disbursement, the value of the conservation easement must be appraised. Appraisals must be completed and signed by a State-certified general appraiser and must contain a disclosure statement by the appraiser. The appraisal must conform to the Uniform Standards of Professional Appraisal Practices or the Uniform Appraisal Standards for Federal Land Acquisitions, as selected by the entity. State Conservationists will provide the guidelines through which NRCS will review appraisals for quality control purposes.

(h) The landowner shall be responsible for complying with the Highly Erodible Land and Wetland Conservation provisions of the Food Security Act of 1985, as amended, and 7 CFR part 12.

§ 1491.5 Application procedures.

(a) An entity shall submit an application to the State Conservationist in the State where parcels are located in order to determine if the entity is eligible to participate in FRPP.

(b) The Chief shall determine whether an eligible entity is a certified entity based on the criteria set forth in § 1491.4(d); information provided by the entity's application; and data in the national FRPP database.

(c) The State Conservationist shall notify each entity if it has been determined eligible, certified, or ineligible.

(d) Entities with cooperative agreements entered into after the effective date of this part will not have to resubmit an annual application for the duration of the cooperative agreement. Entities may reapply for eligibility when their cooperative agreements expire.

(e) Throughout the fiscal year, eligible entities may submit to the appropriate NRCS State Conservationist applications for parcels, in that State, with supporting information to be scored, ranked, and considered for funding.

(f) At the end of each fiscal year, the lists of pending, unfunded parcels shall be cancelled unless the entity requests that specific parcels be considered for funding in the next fiscal year. Entities must submit a new list of parcels each fiscal year in order to be considered for funding unless they request that parcels from the previous fiscal year be considered.

§ 1491.6 Ranking considerations and proposal selection.

(a) Before the State Conservationist can score and rank the parcels for funding, the eligibility of the landowner and the land must be assessed.

(b) The State Conservationist shall use National and State criteria to score and rank parcels. The national ranking criteria will be established by the Chief and the State criteria will be determined by the State Conservationist, with advice from the State Technical Committee. The national criteria shall comprise at least half of the ranking system score.

(c) When funds are available, the State Conservationist shall announce the date on which ranking of parcels shall occur. A State Conservationist may announce more than one date of ranking in a fiscal year.

(d) All parcels submitted throughout the fiscal year shall be scored. All parcels will be ranked together in accordance with the national and state ranking criteria before parcels are selected for funding.

(e) The parcels selected for funding shall be listed on the agreements of the entities that submitted the parcels and the agreements shall be signed by the State Conservationist and the eligible entity. Funds for each fiscal year's parcels shall be obligated with a new signature each year on an amendment to the agreement. Parcels funded on each fiscal year's amendment shall have a separate deadline for closing and requesting reimbursement.

(f) The national ranking criteria are:

(1) Percent of prime, unique, and important farmland in the parcel to be protected;

(2) Percent of cropland, pastureland, grassland, and rangeland in the parcel to be protected;

(3) Ratio of the total acres of land in the parcel to be protected to average farm size in the county according to the most recent USDA Census of Agriculture;

(4) Decrease in the percentage of acreage of farm and ranch land in the county in which the parcel is located between the last two USDA Censuses of Agriculture;

(5) Percent population growth in the county as documented by the United States Census;

(6) Population density (population per square mile) as documented by the most recent United States Census;

(7) Proximity of the parcel to other protected land, such as military installations land owned in fee title by the United States or a State or local government, or by an entity whose purpose is to protect agricultural use and related conservation values, or land that is already subject to an easement or deed restriction that limits the conversion of the land to nonagricultural use;

(8) Proximity of the parcel to other agricultural operations and infrastructure; and

(9) Other additional criteria as determined by the Chief.

(g) State or local criteria, as determined by the State Conservationist, with advice of the State Technical Committee, may include:

(1) The location of a parcel in an area zoned for agricultural use;

(2) The performance of an entity experience in managing and enforcing easements. Performance must be measured by the closing efficiency or percentage of monitoring that is reported. Years of an entity's existence shall not be used as a ranking factor;

(3) Multifunctional benefits of farm and ranch land protection including social, economic, historical and archaeological, and environmental benefits;

(4) Geographic regions where the enrollment of particular lands may help achieve National, State, and regional conservation goals and objectives, or enhance existing government or private conservation projects;

(5) Diversity of natural resources to be protected;

(6) Score in the Land Evaluation and Site Assessment (LESA) system. This score serves as a measure of agricultural viability (access to markets and infrastructure);

(7) Existence of a farm or ranch succession plan or similar plan established to encourage farm viability for future generations; and

(8) Landowner willingness to allow public access for recreational purposes.

(h) State ranking criteria will be developed on a State-by-State basis. The State Conservationist will make available a full listing of applicable National and State ranking criteria.

Subpart B—Cooperative Agreements and Conservation Easement Deeds

§ 1491.20 Cooperative agreements.

(a) NRCS, on behalf of CCC, shall enter into a cooperative agreement with those entities selected for funding. Once a proposal is selected by the State Conservationist, the entity must work with the State Conservationist to finalize and sign the cooperative agreement, incorporating all necessary FRPP requirements. The cooperative agreement must address:

(1) The interests in land to be acquired, including the United States' right of enforcement as well as the form and other terms and conditions of the easement deed;

(2) The management and enforcement of the rights on lands acquired with FRPP funds;

(3) The responsibilities of NRCS;

(4) The responsibilities of the eligible entity on lands acquired with FRPP funds;

(5) The allowance of parcel substitution upon mutual agreement of the parties; and

(6) Other requirements deemed necessary by NRCS to meet the purposes of this part or protect the interests of the United States.

(b) The term of cooperative agreements shall be a minimum of five years for certified entities and three years for other eligible entities.

(c) The cooperative agreement shall also include an attachment listing the parcels accepted by the State Conservationist. This list shall include landowners' names and addresses, acreage, the estimated fair market value, the estimated Federal contribution, and other relevant information. An example of a cooperative agreement shall be made available by the State Conservationist.

§ 1491.21 Funding.

(a) Subject to the statutory limits, the State Conservationist, in coordination with the cooperating entity, shall determine the NRCS share of the cost of purchasing a conservation easement or other interest in the land.

(b) NRCS may provide up to 50 percent of the appraised fair market value of the conservation easement, as determined in § 1491.4(g). An entity shall share in the cost of purchasing a conservation easement in accordance with the limitations of this part.

(c) A landowner may make donations toward the acquisition of the conservation easement.

(d) The entity must provide a minimum of 25 percent of the purchase price of the conservation easement.

(e) FRPP funds may not be used for expenditures such as appraisals, surveys, title insurance, legal fees, costs of easement monitoring, and other related administrative and transaction costs incurred by the entity.

(f) If the State Conservationist determines that the purchase of two or more conservation easements are comparable in achieving FRPP goals, the State Conservationist shall not assign a higher priority to any one of these conservation easements solely on the basis of lesser cost to FRPP.

(g) Environmental Services Credits.

(1) NRCS asserts no direct or indirect interest in environmental credits that may result from or be associated with an FRPP easement.

(2) NRCS retains the authority to ensure that the requirements for FRPP-funded easements are met and maintained consistent with this part.

(3) If activities required under an environmental credit agreement may affect land covered under a FRPP easement, landowners are encouraged to request a compatibility assessment from the eligible entity prior to entering into such agreements.

§ 1491.22 Conservation easement deeds.

(a) Under FRPP, a landowner grants an easement to an eligible entity with which NRCS has entered into an FRPP cooperative agreement. The easement shall require that the easement area be maintained in accordance with FRPP goals and objectives for the term of the easement.

(b) Pending offers by an eligible entity must be for acquiring an easement in perpetuity, except where State law prohibits a permanent easement. In such cases where State law limits the term of a conservation easement, the easement term shall be for the maximum allowed under state law.

(c) The entity may use its own terms and conditions in the conservation easement deed, but a conservation easement deed template used by the eligible entity shall be submitted to the NRCS National Headquarters within 30 days of the signing of the cooperative agreement. The conservation easement deed templates must be reviewed and approved by the NRCS National Headquarters in advance of use. NRCS reserves the right to require additional specific language or to remove language in the conservation easement deed to protect the interests of the United States.

(d) The conveyance document must include a ''right of enforcement'' clause for the United States. NRCS shall specify the terms for the ''right of enforcement'' clause to read as set forth in the FRPP cooperative agreement. The right of enforcement provides that the NRCS has the right to inspect and enforce the easement, if the eligible entity fails to uphold the easement, as determined by NRCS. This right is a vested interest in real property and cannot be condemned by State or local government.

(e) As a condition for participation, a conservation plan shall be developed by NRCS in consultation with the landowner and implemented according to the NRCS Field Office Technical Guide. NRCS may work through the local conservation district in the development of the conservation plan. The conservation plan will be developed and managed in accordance with the Food Security Act of 1985, as amended, 7 CFR part 12 or subsequent regulations, and other requirements as determined by the State Conservationist. To ensure compliance with this conservation plan, the easement shall grant to the United States, through NRCS, its successors or assigns, a right of access to the easement area.

(f) The cooperating entity shall acquire, hold, manage and enforce the easement. The cooperating entity may have the option to enter into an agreement with governmental or private organizations to carry out easement stewardship responsibilities.

(g) Prior to easement closing, NRCS must sign an acceptance of the conservation easement, concurring with the terms of the conservation easement and accepting its interest in the conservation easement deed.

(h) All conservation easement deeds acquired with FRPP funds must be recorded. Proof of recordation shall be provided to NRCS by the cooperating entity.

(i) Impervious surfaces shall not exceed two percent of the FRPP easement area, excluding NRCS-approved conservation practices. The NRCS State Conservationist may waive the two percent impervious surface limitation on a parcel by parcel basis, provided that no more than ten percent of the easement area is covered by impervious surfaces. Before waiving the two percent limitation, the State Conservationist must consider, at a minimum: population density; the ratio of open prime other important farmland versus impervious surfaces on the easement area; the impact to water

quality concerns in the area; the type of agricultural operation; and parcel size. All FRPP easements must include language limiting the amount of impervious surfaces within the easement area.

(j) The conservation easement deed must include an indemnification clause requiring the landowner (grantor) to indemnify and hold harmless the United States from any liability arising from or related to the property enrolled in FRPP.

(k) The conservation easement deed must include an amendment clause requiring that any changes to the easement deed after its recordation must be consistent with the purposes of the conservation easement and this part.

Subpart C—General Administration

§ 1491.30 Violations and remedies.

(a) In the event of a violation of the terms of the easement, the eligible entity shall notify the landowner. The landowner may be given reasonable notice and, where appropriate, an opportunity to voluntarily correct the violation in accordance with the terms of the conservation easement.

(b) In the event that the entity fails to enforce any of the terms of the conservation easement, as determined in the sole discretion of the Chief, the Chief and his or her successors or assigns may exercise the United States' rights to enforce the terms of the conservation easement through any and all authorities available under Federal or State law.

(c) Notwithstanding paragraph (a) of this section, NRCS, upon notification to the landowner, reserves the right to enter upon the easement area at any time to monitor conservation plan implementation or remedy deficiencies or easement violations, as it relates to the conservation plan. The entry may be made at the discretion of NRCS when the actions are deemed necessary to protect highly erodible soils and wetland resources. The landowner will be liable for any costs incurred by the NRCS as a result of the landowner's negligence or failure to comply with the easement requirements as it relates to conservation plan violations.

(d) The United States shall be entitled to recover any and all administrative and legal costs from the participating entity, including attorney's fees or expenses, associated with any enforcement or remedial action as it relates to the enforcement of the FRPP easement.

(e) In instances where an easement is terminated or extinguished, NRCS shall collect CCC's share of the conservation easement based on the appraised fair market value of the conservation easement at the time the easement is extinguished or terminated. CCC's share shall be in proportion to its percentage of original investment.

(f) In the event NRCS determines it must exercise the United States' right to enforce the terms of, or taking a property interest in, the conservation easement, NRCS shall provide written notice by certified mail to the grantee at the grantee's last known address. The notice will set forth the nature of the noncompliance by the grantee and a 60-day period to cure. If the grantee fails to cure within the 60-day period, the United States shall take the action specified under the notice. The United States reserves the right to decline to provide a period to cure if NRCS determines that imminent harm may result to the conservation easement deed or the conservation values it seeks to protect.

§ 1491.31 Appeals.

(a) A person or eligible entity which has submitted an FRPP proposal and is therefore participating in FRPP may obtain a review of any administrative determination concerning eligibility for participation utilizing the administrative appeal regulations provided in 7 CFR part 614.

(b) Before a person or eligible entity may seek judicial review of any administrative action taken under this part, the person or eligible entity must exhaust all administrative appeal procedures set forth in paragraph (a) of this section, and for the purposes of judicial review, no decision shall be a final Agency action except a decision of the Chief of the NRCS under these provisions.

(c) Enforcement action undertaken by the NRCS in furtherance of its vested property rights are under the jurisdiction of the Federal District Court and not subject to review under administrative appeal regulations.

§ 1491.32 Scheme or device.

(a) If it is determined by the NRCS that a cooperating entity has employed a scheme or device to defeat the purposes of this part, any part of any program payment otherwise due or paid such a cooperating entity during the applicable period may be withheld or be required to be refunded with interest thereon, as determined appropriate by NRCS on behalf of CCC.

(b) A scheme or device includes, but is not limited to, coercion, fraud, misrepresentation, depriving any other person or entity of payments for easements for the purpose of obtaining a payment to which a person would otherwise not be entitled.

Signed this 9th day of 2009 in Washington, DC.

Arlen L. Lancaster,

Vice President, Commodity Credit Corporation and Chief, Natural Resources Conservation Service.

[FR Doc. E9–829 Filed 1–15–09; 8:45 am]

BILLING CODE 3410–16–P

DEPARTMENT OF AGRICULTURE

Rural Utilities Service

7 CFR Part 1779

Rural Housing Service

7 CFR Part 3575

Rural Business—Cooperative Service

Rural Utilities Service

7 CFR Parts 4279 and 4280

Rural Business—Cooperative Service

Rural Housing Service

Rural Utilities Service

7 CFR Part 5001

[FR Doc. E8–29151]

RIN 0570–AA65

Rural Development Guaranteed Loans

AGENCIES: Rural Business—Cooperative Service, Rural Housing Service, Rural Utilities Service, USDA.

ACTION: Interim rule; delay of the effective date.

SUMMARY: Rural Development is delaying the effective date of the interim rule for Rural Development Guaranteed Loans, which was published on December 17, 2008. The interim rule establishes a unified guaranteed loan platform for the enhanced delivery of four existing Rural Development guaranteed loan programs—Community Facility; Water and Waste Disposal; Business and Industry; and Renewable Energy Systems and Energy Efficiency Improvement Projects.

DATES: This effective date of the interim rule, published on December 17, 2008 [73 FR 76698], is delayed from January 16, 2009, until February 17, 2009.

FOR FURTHER INFORMATION CONTACT: Mr. Michael Foore, Rural Development, Business and Cooperative Programs, U.S. Department of Agriculture, 1400 Independence Avenue, SW., Stop 3201,

Washington, DC 20250–3201; e-mail: *Michael.Foore@wdc.usda.gov*; telephone (202) 690–4730.

SUPPLEMENTARY INFORMATION: Rural Development has identified a technical error associated with the publication of the interim rule, in which 7 CFR Parts 1779 and 3575 were mistakenly repealed. These two parts, which are the regulations for the Community Facilities and Water and Waste Disposal guaranteed loan programs, should not have been repealed at this time because, in part, there are other Community Facilities and Water and Waste Disposal regulations that cross-reference these two parts. Rural Development considered publishing a technical correction notice to reinstate these two regulations. Due to time constraints for publication in the **Federal Register** prior to the effective date of January 16, 2009, there was insufficient time for full consideration of these technical corrections. Therefore, Rural Development determined that the best course of action was to delay the effective date of the interim rule by 30 days.

Dated: January 9, 2009.

Doug Faulkner,

Acting Under Secretary for Rural Development.

[FR Doc. E9–813 Filed 1–15–09; 8:45 am]

BILLING CODE 3410–XY–P

DEPARTMENT OF HOMELAND SECURITY

8 CFR Parts 103 and 299

[CIS No. 2074–00; DHS Docket No. USCIS–2005–0013]

RIN 1615–AB19

Establishment of a Genealogy Program; Correcting Amendment

AGENCY: U.S. Citizenship and Immigration Services, DHS.

ACTION: Correcting amendment.

SUMMARY: With this amendment, the Department of Homeland Security (DHS) corrects an inadvertent error in the amendatory language from the Establishment of a Genealogy Program Final Rule published in the **Federal Register** on May 15, 2008.

DATES: This correction is effective January 16, 2009.

FOR FURTHER INFORMATION CONTACT: Lynda Spencer, Genealogy Program, U.S. Citizenship and Immigration Services, Department of Homeland Security, 1200 First Street, NE., 2nd Floor, Washington, DC 20529–2206, telephone (202) 272–8282.

SUPPLEMENTARY INFORMATION:

Need for Correction

On May 15, 2008, the Department of Homeland Security (DHS) published a final rule in the **Federal Register** at 73 FR 28026 establishing a fee-for-service Genealogy Program within U.S. Citizenship and Immigration Services (USCIS) to streamline and improve the process for acquiring historical records of deceased individuals. There was an inadvertent error in that document. In the amendatory language for amendment 2b at 73 FR 28030, DHS inadvertently revised the fifth sentence to 8 CFR 103.7(c)(1) instead of the sixth sentence. As a result the fifth sentence in 8 CFR 103.7(c)(1) is incorrect. This document corrects the error.

List of Subjects

8 CFR Part 103

Administrative practice and procedure, Authority delegations (Government agencies), Freedom of Information, Privacy, Reporting and recordkeeping requirements, Surety bonds.

8 CFR Part 299

Immigration, Reporting and recordkeeping requirements.

■ Accordingly, chapter I of title 8 of the Code of Federal Regulations is amended as follows:

PART 103—POWERS AND DUTIES; AVAILABILITY OF RECORDS

■ 1. The authority citation for part 103 continues to read as follows:

Authority: 5 U.S.C. 301, 552, 552a; 8 U.S.C. 1101, 1103, 1304, 1356; 31 U.S.C. 9701; Public Law 107–296, 116 Stat. 2135 (6 U.S.C. 1 *et seq.*), E.O. 12356, 47 FR 14874, 15557, 3 CFR, 1982 Comp., p. 166; 8 CFR part 2.

■ 2. Section 103.7(c)(1) is amended by revising the fifth and sixth sentences to read as follows:

§ 103.7 Fees.

* * * * *

(c) * * *

* * * The payment of the additional sum prescribed by section 245(i) of the Act when applying for adjustment of status under section 245 of the Act may not be waived. The fees for Form I–907, Request for Premium Processing Services, and for Forms G–1041 and G–1041A, Genealogy Program request forms, may not be waived.

* * * * *

Dated: January 13, 2009.

Michael Aytes,

Acting Deputy Director.

[FR Doc. E9–912 Filed 1–15–09; 8:45 am]

BILLING CODE 9111–97–P

DEPARTMENT OF HOMELAND SECURITY

Bureau of Customs and Border Protection

8 CFR Parts 100, 212, 214, 215, 233, and 235

19 CFR Parts 4 and 122

[USCBP–2009–0001; CBP Dec. No. 09–02]

RIN 1651–AA77

Establishing U.S. Ports of Entry in the Commonwealth of the Northern Mariana Islands (CNMI) and Implementing the Guam-CNMI Visa Waiver Program

AGENCY: Customs and Border Protection, DHS.

ACTION: Interim final rule; solicitation of comments.

SUMMARY: Section 702 of the Consolidated Natural Resources Act of 2008 (CNRA) extends the immigration laws of the United States to the Commonwealth of the Northern Mariana Islands (CNMI) and provides for a visa waiver program for travel to Guam and the CNMI. This rule implements section 702 of the CNRA by amending U.S. Customs and Border Protection (CBP) regulations to replace the current Guam Visa Waiver Program with a new Guam-CNMI Visa Waiver Program. Accordingly, this interim final rule sets forth the requirements for nonimmigrant visitors who seek admission for business or pleasure and solely for entry into and stay on Guam or the CNMI without a visa for a period of authorized stay of no longer than forty-five days. In addition, this rule establishes six ports of entry in the CNMI in order to administer and enforce the Guam-CNMI Visa Waiver Program and to allow for immigration inspections in the CNMI, including arrival and departure controls, under the Immigration and Nationality Act (INA).

DATES: *Effective Date:* This interim final rule is effective January 16, 2009.

Implementation Date: Beginning June 1, 2009, Customs and Border Protection (CBP) will begin operation of this program and required compliance with this interim final rule will begin. The existing Guam Visa Waiver Program

remains in effect for travel to Guam until the start of the transition period.

Comment Date: Comments must be received by March 17, 2009.

ADDRESSES: Please submit comments, identified by docket number, by one of the following methods:

- *Federal eRulemaking Portal: http://www.regulations.gov.* Follow the instructions for submitting comments via docket number USCBP–2009–0001.
- *Mail:* Border Security Regulations Branch, Office of International Trade, Customs and Border Protection, Mint Annex, 799 9th Street, NW., Washington, DC 20001.
- *Instructions:* All submissions received must include the agency name and docket number for this rulemaking. All comments received will be posted without change to *http://www.regulations.gov,* including any personal information provided.
- *Docket:* For access to the docket to read background documents or comments received, go to *http://www.regulations.gov.* Comments submitted will be available for public inspection in accordance with the Freedom of Information Act (5 U.S.C. 552) and 19 CFR 103.11(b) on normal business days between the hours of 9 a.m. and 4:30 p.m. at the Border Security Regulations Branch, Office of International Trade, Customs and Border Protection, 799 9th Street, NW., 5th Floor, Washington, DC. Arrangements to inspect submitted comments should be made in advance by calling Mr. Joseph Clark at (202) 325–0118.

FOR FURTHER INFORMATION CONTACT: Cheryl C. Peters, Office of Field Operations, at (202) 344–1438.

SUPPLEMENTARY INFORMATION:

Table of Contents

I. Public Comments
II. Background and Purpose
A. Current Requirements for the Guam Visa Waiver Program
B. The Consolidated Natural Resources Act of 2008
III. Establishing the Guam-CNMI Visa Waiver Program
A. Program Countries
1. General Eligibility Criteria
2. ''Significant Economic Benefit'' Criteria
3. Determination of Country Eligibility
4. Suspension of Program Countries
B. Alien Eligibility Criteria
1. Requirements for Admission
2. Inadmissibility and Deportability
3. Bond Provision
4. Maintenance of Status
5. Applicability of Section 212 of the INA—Passport and Visa Requirement
6. Applicability of Section 217 of the INA—Visa Waiver Program
IV. Conforming Changes and Amendments
A. Changes to CBP Form I–736 ''Guam Visa Waiver Information'' and to CBP Form I–760 ''Guam Visa Waiver Agreement''
B. Conforming Changes to Title 8 of the Code of Federal Regulations
C. Conforming Changes to Title 19 of the Code of Federal Regulations
V. Establishing Ports of Entry in the CNMI
VI. Effective Date
VII. Statutory and Regulatory Requirements
A. Administrative Procedure Act
B. Executive Order 12866
C. Regulatory Flexibility Act
D. Unfunded Mandates Reform Act of 1995
E. Executive Order 13132
F. Executive Order 12988
G. Paperwork Reduction Act
H. Privacy
List of Subjects

I. Public Comments

Interested persons are invited to submit written comments on all aspects of this interim final rule. Customs and Border Protection (CBP) also invites comments on the economic, environmental or federalism effects of this rule. We urge commenters to reference a specific portion of the rule, explain the reason for any recommended change, and include data, information, or authorities that support such recommended change.

II. Background and Purpose

This interim final rule establishes the Guam-Commonwealth of the Northern Mariana Islands (CNMI) Visa Waiver Program as authorized under section 702(b) of the Consolidated Natural Resources Act of 2008 (CNRA), Public Law 110–229, 122 Stat. 754, 860. As explained in more detail below, this rule replaces the current Guam Visa Waiver Program with a new Guam-CNMI Visa Waiver Program. Under this rule, CBP also is establishing six ports of entry in the CNMI to enable DHS to administer and enforce the Guam-CNMI Visa Waiver Program, and to allow for the application of U.S. immigration laws in the CNMI as directed under section 702 of the CNRA.

A. Current Requirements for the Guam Visa Waiver Program

Pursuant to section 212(l) of the Immigration and Nationality Act (INA) and DHS regulations, aliens who are citizens of eligible countries or geographic areas (hereinafter countries) may apply for admission to Guam at a Guam port of entry as nonimmigrant visitors for a period of fifteen days or less, for business or pleasure, without first obtaining a nonimmigrant visa, provided that they are otherwise eligible for admission under applicable statutory and regulatory requirements.[1] *See* 8 U.S.C. 1182(l) and 8 CFR 212.1(e). The alien must be a citizen of a country that: (i) Has a visa refusal rate of 16.9% or less, or is a country whose visa refusal rate exceeds 16.9% and has an established preinspection or preclearance program, pursuant to a bilateral agreement with the United States; (ii) is within geographical proximity to Guam unless the country has a substantial volume of nonimmigrant admissions to Guam as determined by the Commissioner of CBP and extends reciprocal privileges to citizens of the United States; (iii) is not designated by the Department of State as being of special humanitarian concern; and (iv) poses no threat to the welfare, safety or security of the United States, its territories or commonwealths. 8 CFR 212.1(e)(2). The existing regulations also provide that any potential threats to the welfare, safety, or security of the United States, its territories, or commonwealths will be dealt with on a country by country basis, and a determination by the Secretary that a threat exists will result in the immediate deletion of the country from the listing of eligible countries.

Currently, the determination as to which countries may participate in the Guam Visa Waiver Program is based on the countries' geographical proximity to Guam on the premise that they maintain a traditional interchange with Guam. Countries that are not in geographic proximity to Guam may be included if they have a substantial volume of nonimmigrant admissions to Guam and extend reciprocal privileges to citizens of the United States. The following countries meet these eligibility requirements and are currently members of the Guam Visa Waiver Program: Australia, Brunei, Indonesia, Japan, Malaysia, Nauru, New Zealand, Papua New Guinea, Republic of Korea, Singapore, Solomon Islands, Taiwan (residents who begin travel in Taiwan and fly to Guam without an intermediate layover or stop en route), the United Kingdom (including citizens of Hong Kong), Vanuatu, and Western Samoa. *See* 8 CFR 212.1(e)(3)(i).

An alien from one of these eligible countries currently may be admitted into Guam under the Guam Visa Waiver

[1] Establishment of the Guam Visa Waiver Program was predicated upon the Attorney General, in consultation with the Secretary of State and the Secretary of the Interior, and after consultation with the Governor of Guam, making a joint determination that: (i) An adequate arrival and departure control system has been developed on Guam, and (ii) such a waiver does not represent a threat to the welfare, safety, or security of the United States or its territories and commonwealths. *See* section 212(l) of the INA, 8 U.S.C. 1182(l).

Program if the alien: (i) Is classifiable as a visitor for business or pleasure; (ii) is solely entering and staying on Guam for a period not to exceed fifteen days; (iii) is in possession of a round-trip nonrefundable and nontransferable transportation ticket bearing a confirmed departure date not exceeding fifteen days from the date of admission to Guam; (iv) is in possession of a completed and signed Guam Visa Waiver Information Form (CBP Form I–736); (v) waives any right to review or appeal under the INA of an immigration officer's determination as to the admissibility of the alien at the port of entry into Guam; and (vi) waives any right to contest other than on the basis of an application for asylum, any action for deportation of the alien. *See* 8 CFR 212.1(e)(1).

B. The Consolidated Natural Resources Act of 2008

On May 8, 2008, the President signed into law the Consolidated Natural Resources Act of 2008 (CNRA), Public Law 110–229, 122 Stat. 754. Section 702(a) of the CNRA extends U.S. immigration laws to the CNMI and authorizes DHS to create a Guam-CNMI Visa Waiver Program. *See* sections 212 and 214 of the INA, 8 U.S.C. 1182 and 1184.

This interim final rule establishes the Guam-CNMI Visa Waiver Program and sets forth the requirements for nonimmigrant visitors seeking admission into Guam or the CNMI under the Guam-CNMI Visa Waiver Program. These amendments ensure that the regulations conform to current border security needs and facilitate CBP's dual core missions of protecting our nation's borders and fostering legitimate international travel.

Section 702(b) of the CNRA requires the Secretary of Homeland Security to consult with the Secretary of State and the Secretary of the Interior, the Governor of Guam and the Governor of the CNMI in the development of these regulations. Accordingly, representatives of DHS, including CBP, during a July 10–16, 2008 visit to Guam and the CNMI, met with officials of the Guam Government, the CNMI Government and representatives of the Marianas Visitors Authority, the Guam Visitors Bureau, the Hotel Association of the Northern Mariana Islands, and the Saipan Chamber of Commerce. At the request of the Governor of Guam, DHS officials met with Governor Camacho, his staff, and members of the Guam Visitor's Bureau on September 15, 2008, in Washington, DC. Representatives of DHS also met on November 21, 2008 with Delegate-elect Gregorio ''Kilili'' Sablan, the first Delegate from the CNMI to the U.S. House of Representatives, as well as with members of the Hotel Association of the Northern Mariana Islands (HANMI) on December 5, 2008. Additionally, interagency meetings were held on September 9, October 21, 2008 and December 5, 2008, between DHS, the Department of State, and the Department of the Interior, among others, in order to come to an agreement over the implementation of the Guam-CNMI Visa Waiver Program.

III. Establishing the Guam-CNMI Visa Waiver Program

The following are the eligibility criteria for countries and aliens.

A. Program Countries

1. General Eligibility Criteria

The country eligibility requirements established in this rulemaking under the Guam-CNMI Visa Waiver Program differ from those under the Guam Visa Waiver Program. The new requirements take into account the provisions and purposes of the CNRA and ensure that the regulations conform to current border security needs. In determining the criteria for making country eligibility determinations for the Guam-CNMI Visa Waiver Program, DHS considered a variety of factors to ensure that the new Guam-CNMI Visa Waiver Program reflected Congress's stated purposes of the CRNA to, among others: (1) Ensure effective border control procedures; (2) properly address national security and homeland security concerns in extending U.S. immigration law to the CNMI; and (3) maximize the CNMI's potential for future economic and business growth. *See* section 701(a)(1).

Section 702 of the CRNA provides that ''[i]n determining whether to grant or continue providing the waiver under this subsection to nationals of any country, the Secretary of Homeland Security, in consultation with the Secretary of the Interior and the Secretary of State, shall consider all factors that the Secretary deems relevant, including electronic travel authorizations, procedures for reporting lost and stolen passports, repatriation of aliens, rates of refusal for nonimmigrant visitor visas, overstays, exit systems, and information exchange.'' In determining country eligibility for participation in the Guam-CNMI Visa Waiver Program under this rule, the Secretary of Homeland Security found relevant, and thus considered, each of these enumerated factors.

This rulemaking also provides for these new eligibility conditions to ensure the safety, security, and welfare of the United States. Under these new requirements a country's nationals may not participate in the Guam-CNMI Visa Waiver Program if: (1) The country poses a threat to the welfare, safety or security of the United States, its territories or commonwealths; (2) the country is designated by the Department of State as being of special humanitarian concern; or (3) if the country does not accept for repatriation any citizen, former citizen, or national admitted into Guam or the CNMI under the Guam-CNMI Visa Waiver Program within three weeks after issuance of a final order of removal.

2. ''Significant Economic Benefit'' Criteria

Section 702(b) of the CNRA requires the Secretary to include in the list of participating countries, a list of those countries from which the CNMI has received a ''significant economic benefit'' from the number of visitors for pleasure within the one-year period preceding the date of enactment of the CNRA. However, if the Secretary determines that such a country's inclusion represents a threat to the welfare, safety, or security of the United States, or determines that such country is not eligible based on other factors the Secretary deems relevant, then that country will not qualify as an eligible country.

DHS has determined that, during the relevant timeframe, visitors for pleasure from the People's Republic of China (PRC) and the Russian Federation (Russia) provided a significant economic benefit to the CNMI. This determination is based on the economic analysis below and takes into account the total on-island spending of these visitors on a per country basis, calculated by the Marianas Visitors Authority. During the period of May 2007 through April 2008, DHS calculated visitor arrivals to the CNMI by country of residence. PRC nationals represented ten percent of visitor arrivals and Russian nationals represented one percent of visitor arrivals. The total on-island spending by PRC nationals was $38 million and for Russian nationals was $20 million. Per person on-island spending was equal to $967 for PRC nationals and $4,323 for Russian nationals.

At this time, however, due to political, security, and law enforcement concerns, including high nonimmigrant visa refusal rates and concerns with cooperation regarding the repatriation of citizens, subjects, nationals and residents of the country subject to a final order of removal, nationals of the

PRC and Russia are not eligible to participate in the Guam-CNMI Visa Waiver Program when the program is implemented.

After additional layered security measures, which may include, but are not limited to, electronic travel authorization to screen and approve potential visitors prior to arrival in Guam and the CNMI, and other border security infrastructure, DHS will make a determination as to whether nationals of the PRC and Russia can participate in the Guam-CNMI Visa Waiver Program. In making such a determination, DHS will consider the welfare, safety, and security of the United States and its territories, as well as other considerations deemed relevant by the Secretary.

If DHS determines that nationals from the PRC and/or Russia may participate in the Guam-CNMI Visa Program, DHS will amend the regulations as necessary.

3. Determination of Country Eligibility

This rulemaking includes a listing of all countries that have been determined to be eligible to participate in the Guam-CNMI Visa Waiver Program, and whose nationals may apply for admission into Guam or the CNMI under the Guam-CNMI Visa Waiver Program. The new Guam-CNMI Visa Waiver Program list includes all of the countries that were included in the Guam Visa Waiver Program, except for Indonesia, the Solomon Islands, Vanuatu, and Western Samoa. The Solomon Islands are not included on the list of eligible countries for the Guam-CNMI Visa Waiver Program in consideration of ongoing civil and political instability. Indonesia, Vanuatu, and Western Samoa are not included on the list of eligible countries due to very high rates of refusal for nonimmigrant visitor visas. In addition, these four countries do not provide a ''significant economic benefit'' to the CNMI. Therefore, DHS does not find their removal from the program country list, based on such factors as ongoing civil and political instability, or high nonimmigrant visa refusal rates, to outweigh any existing economic benefits from their past inclusion under the Guam Visa Waiver Program. The following countries are designated for participation in the Guam-CNMI Visa Waiver Program: Australia, Brunei, Hong Kong (Hong Kong Special Administrative Region (SAR) passport and Hong Kong identification card is required), Japan, Malaysia, Nauru, New Zealand, Papua New Guinea, Republic of Korea, Singapore, Taiwan, and the United Kingdom.

4. Suspension of Program Countries

This rule also incorporates the provisions in the CNRA regarding the suspension of countries from the Guam-CNMI Visa Waiver Program. Section 702(b) of the CNRA requires the Secretary to monitor the admission of nonimmigrant visitors to Guam and the CNMI, and to suspend the admission of nationals from a country if the Secretary determines that admissions from that country have resulted in an unacceptable number of overstays, unlawful entry into other parts of the United States, or visitors seeking withholding of removal or seeking asylum.

The CNRA also requires the Secretary to suspend admissions from a country if the Secretary determines that visitors from that country pose a risk to the law enforcement or security interests of Guam, the CNMI, or the United States, including the interest in the enforcement of U.S. immigration laws. Any designated country that fails to meet the country eligibility criteria under new § 212.1(q) shall be removed for good cause. In determining whether to continue to grant the waiver, consistent with the statutory factors listed in section 702(b) of the CNRA, designated countries must, within three weeks after the issuance of a final order of removal, accept for repatriation any citizen, former citizen or national admitted into Guam or the CNMI under this program. Failure to accept for repatriation may result in suspension of that country from the program. The CNRA also provides that the Secretary may suspend the Guam-CNMI Visa Waiver Program on a country-by-country basis for other good cause.

B. Alien Eligibility Criteria

1. Requirements for Admission

The CNRA authorizes the Secretary to allow an alien to enter Guam or the CNMI as a nonimmigrant visitor for business or pleasure for a period not to exceed forty-five days after the Secretary of Homeland Security, in consultation with the Secretaries of State and the Interior and the Governors of Guam, and the CNMI determines that: (i) Adequate arrival and departure control systems have been developed in Guam and the CNMI, and (ii) such a waiver does not represent a threat to the welfare, safety, or security of the United States or its territories and commonwealths.

In addition to the requirements that aliens currently seeking admission to Guam under the current Guam Visa Waiver program must meet, DHS is adding three new admission requirements. Under this interim final rule, to be considered eligible for admission into Guam or the CNMI under the Guam-CNMI Visa Waiver Program, nonimmigrant aliens must also: (i) Be in possession of a valid unexpired passport that meets the standards of the International Civil Aviation Organization (ICAO) for machine readability and which is issued by a country that meets the eligibility requirements as determined by the Secretary; (ii) have not previously violated the terms of any prior admissions to the United States under the Guam-CNMI Visa Waiver Program, the prior Guam Visa Waiver Program, or the Visa Waiver Program as described in section 217(a) of the Act and admissions pursuant to any immigrant or nonimmigrant visa; and (iii) present a valid completed and signed CBP Form I–94, known as the Arrival-Departure Record Form (Form I–94).

Although not specifically required under the Guam Visa Waiver Program regulations, pursuant to operational practices, nonimmigrant visitors currently must present a valid completed and signed CBP Form I–94 to enter Guam under the Guam Visa Waiver Program. This rulemaking explicitly requires completion of an I–94 to enter Guam and the CNMI under the Guam-CNMI Visa Waiver Program.

Additionally, consistent with existing Guam Visa Waiver Program regulations, an alien will not be admitted under the Guam-CNMI Visa Waiver Program unless the alien (i) has waived any right to review or appeal under the INA of an immigration officer's determination as to the admissibility of the alien and (ii) has waived any right to contest any action for removal of the alien, other than on the basis of an application for withholding of removal under section 241(b)(3) of the INA, 8 U.S.C. 1231(b)(3), or withholding or deferral of removal under the regulations implementing Article 3 of the United Nations Convention Against Torture and Other Cruel, Inhuman or Degrading Treatment or Punishment, or an application for asylum if permitted under section 208 of the INA, 8 U.S.C. 1158.

2. Inadmissibility and Deportability

This rule provides DHS with the authority to remove aliens and to make determinations as to admissibility and deportability under 8 CFR 212.1(q)(8). CBP may remove an alien seeking admission under the Guam-CNMI Visa Waiver Program upon a determination that the alien is inadmissible to Guam or the CNMI under one or more of the grounds of inadmissibility (other than for lack of visa) listed under section 212 of the INA. *See* 8 U.S.C. 1182. This rule

also provides that an immigration officer may remove a Guam-CNMI Visa Waiver Program applicant who presents fraudulent or counterfeit travel documents. Likewise, DHS will have the authority to remove an alien admitted under the Guam-CNMI Visa Waiver Program who has violated his/her status under one or more grounds of deportability as listed under section 237 of the INA. *See* 8 U.S.C. 1227. Accordingly, aliens who have been determined to be inadmissible or deportable will not be referred to an immigration judge for further inquiry, examination or hearing, except that an alien admitted to Guam under the Guam-CNMI Visa Waiver Program, who applies for asylum or withholding of removal under section 241(b(3) of the INA or withholding or deferral of removal under the regulations implementing Article 3 of the United Nations Convention Against Torture and Other Cruel, Inhuman or Degrading Treatment or Punishment must be issued a Form I–863 for a proceeding in accordance with 8 CFR 208.2(c)(1) and (2).

The CNRA provides that, during the transition period, section 208 of the INA, 8 U.S.C. 1158, which provides for asylum, does not apply to aliens physically present in the CNMI. *See* Public Law 110–229, 122 Stat. 754, section 702(a). Therefore, prior to January 1, 2015, an alien who is physically present in the CNMI under the Guam-CNMI Visa Waiver Program may not apply for asylum and an immigration judge will not have jurisdiction over asylum applications filed by an alien physically present in the CNMI under the Guam-CNMI Visa Waiver Program. Aliens physically present in the CNMI during the transition period who express a fear of persecution or torture only may establish eligibility for withholding of removal pursuant to INA 241(b)(3) or pursuant to the regulations implementing Article 3 of the United Nations Convention Against Torture and Other Cruel, Inhuman or Degrading Treatment or Punishment.

This rule amends 8 CFR 214.1, regarding ineligibility for extensions of stay to add a limitation regarding extensions of stay for any Guam-CNMI Visa Waiver Program nonimmigrants. Currently, nonimmigrants who were admitted into the United States as visitors for business or pleasure pursuant to the Visa Waiver Program (section 217 of the INA) are ineligible for an extension of stay. This amendment will provide that nonimmigrants admitted pursuant to the Guam-CNMI Visa Waiver Program are ineligible for an extension of stay. Additional technical changes to 8 CFR 233.5 to include references to the CNMI also are made where appropriate.

3. Bond Provision

Section 702(b) of the CNRA also requires that the regulations include any bonding requirements for nationals of some or all of those countries who may present an increased risk of overstaying their period of authorized stay or other potential problems. *See* section 702(b). This rule implements this new bonding provision in new section 212.1(q), which provides that the Secretary may require a bond on behalf of an alien seeking admission under the Guam-CNMI Visa Waiver Program when the Secretary deems it appropriate.

4. Maintenance of Status

This rule includes a provision allowing an alien admitted to Guam or the CNMI under the Guam-CNMI Visa Waiver Program to seek a period of satisfactory departure. Under this rule, CBP and U.S. Citizenship and Immigration Services (USCIS) have the discretion to grant a period of satisfactory departure to an alien admitted under the Guam-CNMI Visa Waiver Program in the event of an emergency. Under new § 212.1(q)(7), this rule provides that if an alien admitted under the Guam-CNMI Visa Waiver Program is prevented from departing within the period of his or her authorized stay due to an emergency, CBP or USCIS may grant satisfactory departure to permit the alien to delay departing Guam or the CNMI for a period not to exceed fifteen days. If the alien departs within the extended time period, the alien will be regarded as having departed within the required time period and will not be considered as having overstayed his period of authorized stay.

5. Applicability of Section 212 of the INA—Passport and Visa Requirement

Another result of applying the U.S. immigration laws to the CNMI, is that, pursuant to section 212 of the INA, 8 U.S.C. 1182, nonimmigrant visitors who seek admission to the CNMI must possess a valid passport and a valid visa, unless they are applying for entry under a visa waiver program. This means that nonimmigrant visitors who are not eligible for either the Visa Waiver Program under 8 CFR part 217 (VWP) or the Guam-CNMI Visa Waiver Program must possess a valid passport and must obtain a visa from a U.S. Embassy or Consulate. They will no longer be able to visit the CNMI using the CNMI Visitor Entry Permit.[2]

6. Applicability of Section 217 of the INA—Visa Waiver Program

The CNRA extends the immigration laws of the United States to the CNMI. Thus, the admission of aliens to the CNMI is governed by the provisions of the INA. As indicated above, this rule amends 8 CFR 215.1 to add the CNMI to the definition of the United States to ensure that the INA applies to the CNMI.

Section 217 of the INA, 8 U.S.C. 1187, establishes the VWP. Under the VWP, nationals of designated countries can apply for admission to the United States at ports of entry for business or pleasure for up to 90 days without first obtaining a nonimmigrant visa. The regulations implementing the VWP are at 8 CFR part 217. Under this interim final rule, both the VWP and the Guam-CNMI Visa Waiver Program will be in operation in the CNMI. Thus, nonimmigrant visitors may be able to apply for admission to the CNMI under one or both programs, depending on the eligibility status of the nonimmigrant visitors' country of nationality or citizenship. The permitted length of stay will depend on whether the nonimmigrant visitors are admitted under the VWP (up to 90 days) or under the Guam-CNMI Visa Waiver Program (up to 45 days).[3]

IV. Conforming Changes and Amendments

A. Changes to CBP Form I–736 ''Guam Visa Waiver Information'' and to CBP Form I–760 ''Guam Visa Waiver Agreement''

Under the current Guam Visa Waiver Program, an alien seeking admission must present a completed CBP Form I–736 ''Guam Visa Waiver Information'' (I–736) in order to be admitted into Guam without a visa. The alien must also present a completed and signed CBP Form I–94/Arrival-Departure Record Form (I–94). The I–736 will be revised so that it will be entitled:

[2] Nonimmigrant visitors who seek admission to Guam already must possess a valid passport and a valid visa, or a valid passport (and no visa) if they are applying for entry under a visa waiver program. This will not change under this interim final rule.

[3] The immigration laws of the United States already apply to Guam. Thus, nonimmigrant visitors from designated countries already can apply for admission to Guam under the VWP under section 217 of the INA or the Guam Visa Waiver Program under section 212(1) of the INA. Under this interim final rule, visitors from participating countries will be able to apply for admission to Guam or the CNMI under the VWP or the Guam-CNMI Visa Waiver Program. The permitted length of stay depends on whether they are admitted under the VWP (up to 90 days) or under the Guam-CNMI Visa Waiver Program (up to 45 days).

''Guam-CNMI Visa Waiver Information Form.'' Additionally, the portion of the form allowing for a maximum stay of 15 days visit will be changed to allow for a maximum stay of 45 days. The amended forms will not be available until after the effective date of the regulation, and not required until the start of the transition period, currently June 1, 2009.

Currently, transportation lines transporting nonimmigrant visitors under the Guam Visa Waiver Program into Guam from foreign territories must enter into a contract with CBP by executing CBP Form I–760 ''Guam Visa Waiver Agreement'' (I–760). Form I–760 will be revised so that it will be titled ''Guam-CNMI Visa Waiver Agreement'' and references to the CNMI will be inserted, where appropriate.[4] A conforming change that adds a new provision at 8 CFR 233.6 has been made to include transportation lines bringing aliens to the CNMI in addition to Guam.

B. Conforming Changes to Title 8 of the Code of Federal Regulations

Part 215 of title 8 of the CFR describes the procedures concerning aliens who depart from the United States. Section 215.1 sets forth the definitions for 8 CFR Part 215. This rule amends 8 CFR 215.1 to add the CNMI to the definition of the United States to ensure that the INA applies to the CNMI beginning June 1, 2009.

To conform the amendments to existing laws, this rule deletes both ''Canal Zone'' and ''Trust Territory of the Pacific'' from the definitions of the United States, under 8 CFR 215.1, paragraphs (e), (g), and (j).

This rule also makes a conforming change in paragraph (e) of § 212.1 by adding the phrase ''Until June 1, 2009,'' to the beginning of the first sentence. This change will allow the existing Guam Visa Waiver Program to continue until the Guam -CNMI Visa Waiver program takes effect on the transition date.

The deletion of ''the Canal Zone'' from 8 CFR 215.1 is being made to reflect that the United States no longer has control over the Canal Zone, pursuant to the Panama Canal Zone Act of 1979, Public Law 96–70. Similarly, the term ''Trust Territory of the Pacific Islands'' is being removed from 8 CFR 215.1 to update the regulations to reflect current law.[5]

C. Conforming Changes to Title 19 of the Code of Federal Regulations

This rule amends 19 CFR 4.7b(a) and 122.49a(a) to add the CNMI to the definition of the term ''United States'' for purposes of the filing of electronic passenger and crew arrival manifests prior to the arrival of vessels and aircraft in the United States.

V. Establishing Ports of Entry in the CNMI

Currently, CBP does not have a presence in the CNMI. In order to implement section 702 of the CNRA, CBP must establish operations in the CNMI to allow for immigration inspections, including arrival and departure controls, under the INA. Such operational controls are also necessary to establish the Guam-CNMI Visa Waiver Program. Therefore, the Secretary is designating six ports of entry in the CNMI for immigration purposes only. The CNMI will continue to enforce and administer its own customs and agriculture laws. This rule amends 8 CFR part 100 to establish Ports-of-Entry, as defined in 8 CFR 100.4(c), to provide air and sea ports in close proximity to the CNMI facilities on the islands of Saipan, Tinian, and Rota.[6]

VI. Effective Date

These regulations will be effective January 16, 2009. Beginning June 1, 2009, unless the start of the transition period is delayed, U.S. immigration law applies to the CNMI and the Guam-CNMI Visa Waiver Program will be implemented. The immediate effective date of this rule allows nationals from the designated participating countries to prepare for their travel to either Guam or the CNMI under the program. In addition, CBP will have the necessary time to establish ports of entry in the CNMI and to set up the necessary infrastructure to implement the Guam-CNMI Visa Waiver Program and enforce U.S. immigration laws. Beginning June 1, 2009, DHS will begin operating ports-of-entry in the CNMI for immigration inspection of arriving aliens and establish departure control for certain flights leaving the CNMI. In addition, on that date, DHS will begin the administration and enforcement of the Guam-CNMI Visa Waiver Program.

The date of June 1, 2009, may be delayed by the Secretary of Homeland Security, in consultation with the Secretary of the Interior, the Secretary of Labor, the Secretary of State, the Attorney General, and the Governor of the Commonwealth of the CNMI, for up to 180 days if the date for application of the immigration laws to the CNMI is delayed pursuant to section 702(b) of the CNRA. Any delay in the implementation date of the Guam-CNMI Visa Waiver Program will be published in the **Federal Register**. Prior to the start of the transition period, currently June 1, 2009, the current requirements pertaining to the Guam Visa Waiver Program will apply to nonimmigrant visitors seeking admission into Guam. Additionally, section 702(b) directs that the promulgation of the regulations shall be considered a foreign affairs function for purposes of the notice and comment and 30-day delayed effective date requirements under the Administrative Procedure Act. *See* 5 U.S.C. 553(a).

VII. Statutory and Regulatory Requirements

A. Administrative Procedure Act

Section 702(b) of CNRA directs that all regulations necessary to implement the Guam-CNMI Visa Waiver Program shall be considered a foreign affairs function for purposes of section 553(a) of the Administrative Procedure Act (APA). Accordingly, this interim final rule is exempt from the notice and comment and 30-day effective date requirements of the APA. Although DHS is not required to provide prior public notice or an opportunity to comment, DHS is nevertheless providing the opportunity for public comments. In accordance with section 702(a) of the CNRA, this rule is effective January 16, 2009. Implementation and compliance with this interim final rule will begin on the date that begins the transition period, which is currently June 1, 2009.

[4] The current provisions of the Guam Visa Waiver Program set forth in 8 CFR 212.1(e) will apply to nonimmigrant visitors seeking admission to Guam under the Guam Visa Waiver Program until the start of the transition period—currently June 1, 2009, when the new Guam-CNMI Visa Waiver Program is implemented. The current CBP Forms I–736 and I–60 are to be used for purposes of the Guam Visa Waiver Program through this date.

[5] The ''Trust Territory of the Pacific Islands'' (TTPI) is no longer in existence. On November 3, 1986, President Reagan announced by Proclamation that the TTPI agreement between the CNMI and the United States was terminated after the Trusteeship Council of the United Nations concluded that the United States satisfactorily discharged its obligations under the agreement. See Proclamation No. 5564, 51 FR 40399 (November 7, 1986). As announced by President Reagan's Proclamation, the United States fully established its agreement with CNMI. This agreement is entitled ''Covenant to Establish a Commonwealth of the Northern Mariana Islands in Political Union with the United States,'' Public Law 99–239, 48 U.S.C. 1801. With regard to the CNMI, the CNMI then became a self-governing Commonwealth in political union with and under the sovereignty of the United States. Therefore, DHS is deleting the term ''Trust Territory of the Pacific Islands'' to conform the regulations to existing law.

[6] Because the INA already applies to Guam and ports of entry have already been established in Guam to administer and enforce the INA, no amendments to 8 CFR part 100 are needed with respect to Guam. Guam will continue to administer its own customs laws.

B. Executive Order 12866

This interim final rule is not a ''significant regulatory action'' under Executive Order 12866, section 3(f), Regulatory Planning and Review, due to the foreign affairs exemption described above. Accordingly, the Office of Management and Budget has not reviewed this regulation under that Executive Order.

DHS has, however prepared an economic analysis of the potential impacts of this interim final rule. A summary of the analysis is presented below. The complete details of the analysis can be found in the Economic Analysis in the public docket for this rule.

The most significant change for admission to the CNMI as a result of the rule will be for visitors from those countries who are not included in either the existing Visa Waiver Program under 8 CFR part 217 or the Guam-CNMI Visa Waiver Program established by the rule. These visitors must apply for U.S. visas, which require in-person interviews at U.S. embassies or consulates and higher fees than the CNMI currently assesses for its visitor entry permits. For admission to Guam, the primary change will be the extension of the maximum allowable period of stay from fifteen days to forty-five days for visitors of countries included in the Guam-CNMI Visa Waiver Program and the opportunity for visitors admitted under the Guam-CNMI Visa Waiver Program to travel between Guam and the CNMI without the requirement to obtain a visa or a visitor entry permit.

In this analysis, we estimate the incremental costs associated with the interim final rule. Specifically, we assess and estimate the potential impact of implementing the Guam-CNMI Visa Waiver Program on the economies of the CNMI and Guam, with particular focus on their tourism sectors. While tourism impacts are ''indirect'' effects of the rule (where the impacts to visitors are the ''direct'' effect because visitors are directly regulated), we consider these impacts because tourism represents a major component of the economies of both the CNMI and Guam.

We anticipate that the CNMI will experience most of the economic impact of this rule because the rule federalizes the entry and exit procedures for nonimmigrant visitors to the CNMI. We first estimate the changes in the travel demand of nonimmigrant visitors to the CNMI (*i.e.*, the reduction in visitors due to implementation of the Guam-CNMI Visa Waiver Program) had the Guam-CNMI Visa Waiver Program been implemented in our baseline year of analysis (May 2007 to April 2008). We then estimate the associated changes in the total amount of visitor spending in the CNMI. Next, we estimate the associated changes in net economic output, income, and employment in the CNMI. Finally, we project these economic impacts to each year of our five-year analysis period (May 2009 through April 2014) and calculate the present value of these cost impacts.

For Guam, we do not anticipate that the interim final rule will significantly affect its economy because the Guam-CNMI Visa Waiver Program only modifies the existing Guam visa waiver program by extending the allowable duration of stay from fifteen days to forty-five days. Thus, we qualitatively assess two of the three issues that may arise as a result of implementing the Guam-CNMI Visa Waiver Program, namely: (1) The impact of extending the allowable period of stay from fifteen days to forty-five days on visitor behavior, spending, and the Guam economy in general; (2) the impact of adding the CNMI to the existing Guam Visa Waiver Program on visitor decisions to visit the CNMI instead of or in addition to Guam; and (3) the impact of excluding Indonesia, the Solomon Islands, Vanuatu, and Western Samoa in the list of program-eligible countries (these four countries currently are participating countries in the Guam Visa Waiver Program).

Because of limitations in the data, we cannot reliably predict and quantify what percentages of visitors to Guam would elect to stay in Guam longer than fifteen days, by how many additional days, and the resulting impact on Guam's economy. On-island tourist expenditures in Guam are quite substantial, and additional days of stay on the island would have a positive impact on Guam's economy. Conversely, adding the CNMI to the existing Guam Visa Waiver Program to establish the Guam-CNMI Visa Waiver Program could divert visitor travel away from Guam to the CNMI. Under the interim final rule, nationals from those countries included in the Guam-CNMI Visa Waiver Program, which includes all the countries currently included in the Guam Visa Waiver Program, may now enter the CNMI without having to apply for and obtain a CNMI visitor entry permit. Such a change may increase the potential for visitors from these countries to travel to the CNMI instead of or in addition to Guam. The Guam-CNMI Visa Waiver Program will facilitate travel between Guam and the CNMI, and packaged tours of both islands may appeal to some tourists, especially visitors that have already visited Guam. However, we do not have sufficient data to reliably predict and quantify the extent to which visitors from countries included in the Guam-CNMI Visa Waiver Program would elect to spend part or all of a planned visit in the CNMI instead of, or in addition to, Guam and how this change would affect the Guam economy.

Finally, we present the costs CBP expects to incur to develop and administer the Guam-CNMI Visa Waiver Program.

Impacts to the CNMI

The two largest foreign markets for visitors to the CNMI in the baseline year of our analysis (May 2007 to April 2008) are Japan and the Republic of Korea. Because this rule does not change the baseline conditions for Japanese visitors and will ease requirements for Korean visitors, we do not estimate any significant changes in visitation levels for these two countries.

To estimate the impacts on tourism from other affected countries, we use an ''elasticity of demand'' for long-haul international leisure trips available from the published literature to compare the change in cost (both in out-of-pocket expenses as well as the value of time burden) that obtaining a visa represents to the trip cost to the CNMI. In this analysis, we estimate out-of-pocket expenses of $187 (including the fee, photos, travel costs, and other miscellaneous expenses) plus an average time of five hours to obtain the visa (including completing the necessary Department of State forms and having an interview at a U.S. embassy). Applying a demand elasticity of -1.04, we find that if the rule had been in effect in the baseline year of analysis (May 2007 to April 2008) the potential impact of this regulation would have been a reduction of approximately 5,017 tourist arrivals from the PRC, 194 tourist arrivals from Russia, and 618 tourist arrivals from the Philippines to the CNMI. We estimate that a strong majority of travelers from these countries would continue traveling to the CNMI even with the implementation of the rule. These visitors represent the three largest tourist markets that primarily will be affected by the rule because they are not included on the list of eligible countries for the Guam-CNMI Visa Waiver Program and, therefore, will now be required to obtain U.S. visas to visit the CNMI (previously PRC and Russia, but not the Philippines, were eligible for admission to the CNMI under its visitor entry permit program).

Based on visitor spending data provided by the Marianas Visitors

Authority, we estimate that the associated reductions in spending would have been $4.9 million from the Chinese, $0.8 million from the Russians, and $0.5 million from the Filipinos. In sum, the total visitor spending in the CNMI could potentially have declined by $6.2 million, or 2.0 percent of the $317 million in total visitor spending. Using economic multiplier data available from the published literature, we estimate that the potential reduction in visitor spending of $6.2 million leads to a reduction of between $8.3 million and $12.5 million in economic output, $2.1 million and $2.4 million in income, and between 131 and 162 jobs in the CNMI.

Applying these baseline year estimates to our five-year period of analysis (2009 to 2014), assuming no growth in the number of visitors or the amounts they spend in the CNMI, results in a total present value estimate of $29.2 million (3 percent discount rate) and $27.1 million (7 percent discount rate) in lost CNMI visitor spending. We estimate that the total present value losses in CNMI economic output and income are between $36.4 million and $59.1 million, and $9.4 million and $11.4 million, respectively, depending on the discount rate applied. Tables 1 and 2 summarize the results of our analysis.

TABLE 1—IMPACTS TO VISITORS, CNMI ECONOMIC ANALYSIS, $2008

Country	Potential No. of lost visitors annually	Annual lost CNMI visitor spending (undiscounted) ($M)	Estimated total on-island spending ($M)	% of on-island spending lost
Japan	0	$0.0	$162	0.0
Korea	0	0.0	65	0.0
China	5,017	4.9	38	12.9
Russia	194	0.8	20	4.2
Philippines	618	0.5	3	18.3
Others	0	0.0	29	0.0
Total	5,829	6.2	317	2.0

TABLE 2—SUMMARY OF ECONOMIC IMPACTS, CNMI ECONOMIC ANALYSIS

	Lost CNMI visitor spending ($M)	Estimated lost CNMI economic output ($M)	Estimated lost CNMI income ($M)
Total, May 2007–Apr 2008 (undiscounted)	$6.2	$8.3 to $12.5	$2.1 to $2.4.
Total (2009–2014), 3% discount rate	29.2	39.1 to 59.1	10.1 to 11.4.
Total (2009–2014), 7% discount rate	27.1	36.4 to 54.9	9.4 to 10.6.

We have not quantified the losses associated with excluding Indonesia, the Solomon Islands, Vanuatu, and Western Samoa from the Guam-CNMI Visa Waiver Program because the Marianas Visitors Authority did not report statistics for these countries individually; they are captured in the ''other'' category in Table 1. Because their current number of visits is low (too low to be reported by the Marianas Visitors Authority), any potential economic losses would also be small.

Impacts to Guam

We attempted to quantify the potential economic impact of the interim final rule on Guam, although we anticipate it to be minimal. Because of limitations in the available data, we could not reliably predict and quantify how many Guam-CNMI Visa Waiver Program-eligible visitors would elect to stay in Guam longer than the current fifteen day limit and by how many days, or elect to spend part or all of their planned visit in the CNMI instead of or in addition to Guam. Additional days of stay on the island would have a positive impact on Guam's economy. However, visitors diverting their travel plans from Guam to the CNMI and visitors from Indonesia, the Solomon Islands, Vanuatu, and Western Samoa forgoing travel to Guam would have a negative impact. The net economic effect of these two factors is unknown.

Government Costs

Finally, CBP estimates that it will incur costs to establish and administer six new air and sea ports of entry in the CNMI. The costs consist of two primary categories: (1) Non-recurring capital costs and other initial or one-time expenses incurred in the first year or prior to implementation of the Guam-CNMI Visa Waiver Program, and (2) recurring operating, maintenance, and personnel costs expected to be incurred each year. CBP will need to build, operate, and maintain the infrastructure needed at the six ports of entry to achieve the requisite level of security (*e.g.*, arrival and departure control) and operational efficiency commensurate with other CBP-operated ports. CBP estimates a capital cost of approximately $25.8 million to develop this infrastructure, and a recurring cost of $153,100 per year for port operation and maintenance. CBP plans to staff these ports initially with experienced temporary duty assignment staff on a short-term basis, gradually replacing them with permanent staff. CBP estimates initial costs of approximately $3.7 million for personnel relocation as well as recurring costs of approximately $7.8 million per year for personnel salary and benefits and $5.3 million per year for associated temporary duty costs (*e.g.*, airfare, per diem food and housing allowances, vehicle rental). Applying these estimated costs to the applicable years of our 5-year analysis period results in total present value cost for government implementation of $87.3 million to $91.7 million, depending on the discount rate applied.

Sources of Uncertainty

Because the Commonwealth of the Northern Mariana Islands is small and remote, the quality and quantity of prior economic data and analyses are very limited. We have relied on the best

available data in estimating the economic impact of implementing the Guam-CNMI Visa Waiver Program. Nonetheless, we recognize that there are significant limitations and uncertainties in our analysis.

The key sources of uncertainty in our analysis are the value of time and demand elasticity for Chinese, Russian, and Filipino visitors. These data are key inputs into our estimates of the reduction in the number of these visitors to the CNMI. To estimate the value of time, we apply the wages from the highest paid industry category among all industries reported in an International Labor Organization (ILO) database; however, we recognize that these data are imperfect. First, comparing wages, and by extension opportunity costs, across countries is notoriously difficult. In addition, it is likely that only the more affluent citizens of these countries would engage in international travel to the CNMI and, therefore, we likely understate their value of time. We test the sensitivity of our wage estimates and find that the estimated loss in CNMI visitor spending could increase by about 40 percent assuming a much higher wage rate ($20 per hour).

The demand elasticity value we use (−1.04) is also a significant source of uncertainty because it may not be representative of visitor demand to the CNMI (demand elasticities for specifically the CNMI or other Pacific Islands are not available). On the one hand, for the more affluent travelers, the additional travel (visa) costs may not currently represent a significant portion of their household budget or travel cost and thus may not be a major factor influencing their travel decisions (less elastic). There may not be very many travelers from the PRC, Russia, and the Philippines for whom the visa costs and burden are particularly meaningful—they are either wealthy enough that it does not matter, or their economic status is such that international travel is out of reach regardless of the additional travel costs. On the other hand, other alternative destinations exist that would provide these visitors with a comparable experience to that of the CNMI. As a result, some of these visitors may simply choose to forgo travel to the CNMI because of the additional burden associated with the visa requirements and instead seek other alternative destinations (more elastic).

Finally, in applying an own-price elasticity of travel demand, we have presented a binary choice for a traveler based solely on price—''go'' or ''do not go.'' In reality, travelers are faced with complex decisions and myriad substitutes for particular trips. There is evidence in the travel literature that price may not be a very big determinant of destination selection. Additionally, a traveler could still choose to visit the CNMI but may spend less while on the islands. This would still be a loss to the CNMI economy, but it would be less than what we have estimated in this analysis. We have chosen to estimate direct costs using demand elasticities to avoid deliberately misrepresenting these costs (we would not want to assume that travelers' decisions will be completely unaffected by the new entry requirements), knowing that we may then be overstating the simplicity of the traveler's decision-making process. In doing this, we have likely overstated indirect costs.

Another source of uncertainty is in the multipliers used to calculate lost economic output, income, and employment as a result of lost tourist spending. Although we use a range of values, the actual total economic impact could be significantly lower or higher than the results presented in this analysis.

A final source of uncertainty is our assumption that the number of visitors or the amounts they spend in the CNMI will remain constant over the five-year analysis period. The historic year-to-year trends in the number of visitors from the PRC, Russia, and the Philippines on which we could estimate a future growth rate vary widely from negative growth (−69.0 percent) to positive growth (118.7 percent). We also cannot reliably predict future growth (or loss) rates given the ever-changing global economy and political climate, airline and tourism industries, the volatility of the CNMI economy, and other factors affecting international travel.

C. Regulatory Flexibility Act

Because this rule is being issued as an interim final rule on the foreign affairs function of the United States, as set forth above, a regulatory flexibility analysis is not required under the Regulatory Flexibility Act (5 U.S.C. 601–612).

D. Unfunded Mandates Reform Act of 1995

Title II of the Unfunded Mandates Reform Act of 1995 (UMRA), enacted as Public Law 104–4, 109 Stat. 48, on March 22, 1995, requires each Federal agency, to the extent permitted by law, to prepare a written assessment of the effects of any Federal mandate in a proposed or final agency rule that may result in the expenditure by State, local, and tribal governments, in the aggregate, or by the private sector, of $100 million or more (adjusted annually for inflation) in any one year. Section 204(a) of the UMRA, 2 U.S.C. 1534(a), requires the Federal agency to develop an effective process to permit timely input by elected officers (or their designees) of State, local, and tribal governments on a proposed ''significant intergovernmental mandate.'' A ''significant intergovernmental mandate'' under the UMRA is any provision in a Federal agency regulation that will impose an enforceable duty upon State, local, and tribal governments, in the aggregate, of $100 million (adjusted annually for inflation) in any one year. Section 203 of the UMRA, 2 U.S.C. 1533, which supplements section 204(a), provides that, before establishing any regulatory requirements that might significantly or uniquely affect small governments, the agency shall have developed a plan that, among other things, provides for notice to potentially affected small governments, if any, and for a meaningful and timely opportunity to provide input in the development of regulatory proposals.

This rule would not impose a significant cost or uniquely affect small governments. The economic impacts of this rule are presented in the Executive Order 12866 discussion of this document.

E. Executive Order 13132

This rule will not have substantial direct effects on the States, on the relationship between the National Government and the States, or on the distribution of power and responsibilities among the various levels of government. Therefore, in accordance with section 6 of Executive Order 13132, DHS has determined that this interim final rule does not have sufficient federalism implications to warrant the preparation of a federalism summary impact statement.

F. Executive Order 12988

This rule meets the applicable standards set forth in sections 3(a) and 3(b)(2) of Executive Order 12988.

G. Paperwork Reduction Act

The collections of information encompassed within this rule have been submitted to the OMB for review in accordance with the Paperwork Reduction Act of 1995 (44 U.S.C. 3507) under OMB Control Number 1651–0109 (Guam Visa Waiver Information) for CBP Form I–736 and OMB Control Number 1651–0111 for Form I–94 (Arrival and Departure Record).

An agency may not conduct, and a person is not required to respond to, a collection of information unless the collection of information displays a valid control number assigned by OMB. The burden estimates for the two forms affected by this rule are presented below.

OMB Control Number 1651–0109 (Guam-CNMI Visa Waiver Information)

Estimated annual average reporting and/or recordkeeping burden: 30,000 hours.

Estimated annual average number of respondents: 360,000.

Estimated average burden per respondent: 5 minutes.

Estimated frequency of responses: Once per year.

OMB Control Number 1651–0111 (Arrival and Departure Record).

Estimated annual average reporting and/or recordkeeping burden: 60,000 hours.

Estimated annual average number of respondents: 360,000.

Estimated average burden per respondent: 10 minutes.

Estimated frequency of responses: Once per year.

Comments concerning the accuracy of this burden estimate and suggestions for reducing this burden should be directed to the Office of Management and Budget, Attention: Desk Officer for the Department of Homeland Security, Office of Information and Regulatory Affairs, Washington, DC 20503. A copy should also be sent to the Border Security Regulations Branch, Customs and Border Protection, Mint Annex, 799 Ninth Street, NW., Washington, DC 20001.

H. Privacy

DHS will publish a Privacy Impact Assessment (PIA) on its Web site. In addition, DHS is also preparing a separate Systems of Records Notice (SORN) in conjunction with this interim final rule.

List of Subjects

8 CFR Part 100

Organization and functions (Government agencies)

8 CFR Part 212

Administrative practice and procedure, Aliens, Immigration, Passports and visas, Reporting and recordkeeping requirements.

8 CFR Part 214

Administrative practice and procedure, Aliens, Cultural exchange programs, Employment, Foreign officials, Health professions, Reporting and recordkeeping requirements, Students.

8 CFR Part 215

Administrative practice and procedure, Aliens, Travel restrictions.

8 CFR Part 233

Air carriers, Maritime carriers, Aliens, Government Contracts.

8 CFR Part 235

Administrative practice and procedure, Aliens, Immigration, Reporting and recordkeeping requirements.

19 CFR Part 4

Customs duties and inspection, Reporting and recordkeeping requirements, Vessels.

19 CFR Part 122

Administrative practice and procedure, Air carriers, Aircraft, Customs duties and inspection, Reporting and recordkeeping requirements.

Amendments to the Regulations

■ For the reasons stated in the preamble, DHS amends parts 100, 212, 214, 215, 233 and 235 of title 8 of the Code of Federal Regulations and parts 4 and 122 of title 19 of the Code of Federal Regulations as set forth below:

8 CFR Chapter 1—Amendments

PART 100—STATEMENT OF ORGANIZATION

■ 1. The authority citation for part 100 continues to read as follows:

Authority: 8 U.S.C. 1103; 8 CFR part 2.

■ 2. Section 100.4 is amended in paragraph (c)(2) by revising the entry for ''Class A'' under ''District No. 17—Honolulu, Hawaii'' and in paragraph (c)(3) by revising the entry under ''District No. 17—Honolulu, Hawaii'' to read as follows:

§ 100.4 Field Offices.

* * * * *

(c) * * *

(2) * * *

District No. 17—Honolulu, Hawaii

Class A

Agana, Guam, M.I (including the port facilities of Apra Harbor, Guam).

Honolulu, HI, Seaport (including all port facilities on the island of Oahu).

Rota, the Commonwealth of the Northern Mariana Islands.

Saipan, the Commonwealth of the Northern Mariana Islands.

Tinian, the Commonwealth of the Northern Mariana Islands.

* * * * *

(3) * * *

District No. 17—Honolulu, Hawaii

Agana, Guam, Guam International Airport Terminal.

Honolulu, HI, Honolulu International Airport.

Honolulu, HI, Hickam Air Force Base.

Rota, the Commonwealth of the Northern Mariana Islands.

Saipan, the Commonwealth of the Northern Mariana Islands.

Tinian, the Commonwealth of the Northern Mariana Islands.

* * * * *

PART 212—DOCUMENTARY REQUIREMENTS: NONIMMIGRANT; WAIVERS; ADMISSION OF CERTAIN INADMISSIBLE ALIENS; PAROLE

■ 3. The general authority citation for part 212 is revised to read as follows:

Authority: 8 U.S.C. 1101 and note, 1102, 1103, 1182 and note, 1184, 1187, 1223, 1225, 1226, 1227, 1359; 8 U.S.C. 1185 note (section 7209 of Pub. L. 108–458, as amended by section 546 of Pub. L. 109–295).

Section 212.1(q) also issued under section 702, Public Law 110–229, 100 Stat. 842.

■ 4. In § 212.1, paragraph (e)(1) introductory text is revised and a new paragraph (q) is added to read as follows:

§ 212.1 Documentary Requirements for Nonimmigrants.

* * * * *

(e) *Aliens entering Guam pursuant to section 14 of Pub. L. 99–396, ''Omnibus Territories Act.''* (1) Until June 1, 2009, a visa is not required of an alien who is a citizen of a country enumerated in paragraph (e)(3) of this section who:

* * * * *

(q) *Aliens admissible under the Guam-CNMI Visa Waiver Program.* (1) *Eligibility for Program.* In accordance with Public Law 110–229, beginning June 1, 2009, the Secretary, in consultation with the Secretaries of the Departments of Interior and State, may waive the visa requirement in the case of a nonimmigrant alien who seeks admission to Guam or to the Commonwealth of the Northern Mariana Islands (CNMI) under the Guam-CNMI Visa Waiver Program. To be admissible under the Guam-CNMI Visa Waiver Program, prior to embarking on a carrier for travel to Guam or the CNMI, each nonimmigrant alien must:

(i) Be a national of a country or geographic area listed in paragraph (q)(2) of this section;

(ii) Be classifiable as a visitor for business or pleasure;

(iii) Be solely entering and staying on Guam or the CNMI for a period not to exceed forty-five days;

(iv) Be in possession of a round trip ticket that is nonrefundable and nontransferable and bears a confirmed departure date not exceeding forty-five days from the date of admission to Guam or the CNMI. ''Round trip ticket'' includes any return trip transportation ticket issued by a participating carrier, electronic ticket record, airline employee passes indicating return passage, individual vouchers for return passage, group vouchers for return passage for charter flights, or military travel orders which include military dependents for return to duty stations outside the United States on U.S. military flights;

(v) Be in possession of a completed and signed Guam-CNMI Visa Waiver Information Form (CBP Form I–736);

(vi) Be in possession of a completed and signed I–94, Arrival-Departure Record (CBP Form I–94);

(vii) Be in possession of a valid unexpired ICAO compliant, machine readable passport issued by a country that meets the eligibility requirements of paragraph (q)(2) of this section;

(viii) Have not previously violated the terms of any prior admissions. Prior admissions include those under the Guam-CNMI Visa Waiver Program, the prior Guam Visa Waiver Program, the Visa Waiver Program as described in section 217(a) of the Act and admissions pursuant to any immigrant or nonimmigrant visa;

(ix) Waive any right to review or appeal an immigration officer's determination of admissibility at the port of entry into Guam or the CNMI;

(x) Waive any right to contest any action for deportation or removal, other than on the basis of: An application for withholding of removal under section 241(b)(3) of the INA; withholding or deferral of removal under the regulations implementing Article 3 of the United Nations Convention Against Torture and Other Cruel, Inhuman or Degrading Treatment or Punishment; or, an application for asylum if permitted under section 208 of the Act; and

(xi) If a resident of Taiwan, possess a Taiwan National Identity Card and a valid Taiwan passport with a valid re-entry permit issued by the Taiwan Ministry of Foreign Affairs.

(2) *Program Countries and Geographic Areas.* (i) General Eligibility Criteria.

(A) A country or geographic area may not participate in the Guam-CNMI Visa Waiver Program if the country or geographic area poses a threat to the welfare, safety or security of the United States, its territories, or commonwealths;

(B) A country or geographic area may not participate in the Guam-CNMI Visa Waiver Program if it has been designated a Country of Particular Concern under the International Religious Freedom Act of 1998 by the Department of State, or identified by the Department of State as a source country of refugees designated of special humanitarian concern to the United States;

(C) A country or geographic area may not participate in the Guam-CNMI Visa Waiver Program if that country, not later than three weeks after the issuance of a final order of removal, does not accept for repatriation any citizen, former citizen, or national of the country against whom a final executable order of removal is issued. Nothing in this subparagraph creates any duty for the United States or any right for any alien with respect to removal or release. Nothing in this subparagraph gives rise to any cause of action or claim under this paragraph or any other law against any official of the United States or of any State to compel the release, removal or reconsideration for release or removal of any alien.

(D) DHS may make a determination regarding a country's eligibility based on other factors including, but not limited to, rate of refusal for nonimmigrant visas, rate of overstays, cooperation in information exchange with the United States, electronic travel authorizations, and any other factors deemed relevant by DHS.

(ii) *Eligible Countries and Geographic Areas.* Nationals of the following countries and geographic areas are eligible to participate in the Guam-CNMI Visa Waiver Program for purposes of admission to both Guam and the CNMI: Australia, Brunei, Hong Kong (Hong Kong Special Administrative Region (SAR) passport and Hong Kong identification card are required), Japan, Malaysia, Nauru, New Zealand, Papua New Guinea, Republic of Korea, Singapore, Taiwan (residents thereof who begin their travel in Taiwan and who travel on direct flights from Taiwan to Guam or the CNMI without an intermediate layover or stop except that the flights may stop in a territory of the United States enroute), and the United Kingdom.

(iii) *Significant Economic Benefit Criteria.* If, in addition to the considerations enumerated under paragraph (q)(2)(i) of this section, DHS determines that the CNMI has received a significant economic benefit from the number of visitors for pleasure from particular countries during the period of May 8, 2007 through May 8, 2008, those countries are eligible to participate in the Guam-CNMI Visa Waiver Program unless the Secretary of Homeland Security determines that such country's inclusion in the Guam-CNMI Visa Waiver Program would represent a threat to the welfare, safety, or security of the United States and its territories.

(iv) *Additional Eligible Countries or Geographic Areas Based on Significant Economic Benefit.* [Reserved.]

(3) *Suspension of Program Countries or Geographic Areas.* (i) Suspension of a country or geographic area from the Guam-CNMI Visa Waiver Program may be made on a country-by-country basis for good cause including, but not limited to if: The admissions of visitors from a country have resulted in an unacceptable number of visitors from a country remaining unlawfully in Guam or the CNMI, unlawfully obtaining entry to other parts of the United States, or seeking withholding of removal or seeking asylum; or that visitors from a country pose a risk to law enforcement or security interests, including the enforcement of immigration laws of Guam, the CNMI, or the United States.

(ii) A country or geographic area may be suspended from the Guam-CNMI Visa Waiver Program if that country or geographic area is designated as a Country of Particular Concern under the International Religious Freedom Act of 1998 by the Department of State, or identified by the Department of State as a source country of refugees designated of special humanitarian concern to the United States, pending an evaluation and determination by the Secretary.

(iii) A country or geographic area may be suspended from the Guam-CNMI Visa Waiver Program by the Secretary of Homeland Security, in consultation with the Secretary of the Interior and the Secretary of State, based on the evaluation of all factors the Secretary deems relevant including, but not limited to, electronic travel authorization, procedures for reporting lost and stolen passports, repatriation of aliens, rates of refusal for nonimmigrant visitor visas, overstays, exit systems and information exchange.

(4) Admission under this section renders an alien ineligible for:

(i) Adjustment of status to that of a temporary resident or, except under the provisions of section 245(i) of the Act, to that of a lawful permanent resident;

(ii) Change of nonimmigrant status; or

(iii) Extension of stay.

(5) *Requirements for transportation lines.* A transportation line bringing any alien to Guam or the CNMI pursuant to this section must:

(i) Enter into a contract on CBP Form I–760, made by the Commissioner of Customs and Border Protection on behalf of the government;

(ii) Transport an alien who is a citizen or national and in possession of a valid unexpired ICAO compliant, machine readable passport of a country enumerated in paragraph (q)(2) of this section;

(iii) Transport an alien only if the alien is in possession of a round trip ticket as defined in paragraph (q)(1)(iv) of this section bearing a confirmed departure date not exceeding forty-five days from the date of admission to Guam or the CNMI which the carrier will unconditionally honor when presented for return passage. This ticket must be:

(A) Valid for a period of not less than one year,

(B) Nonrefundable except in the country in which issued or in the country of the alien's nationality or residence, and

(C) Issued by a carrier which has entered into an agreement described in paragraph (q)(5) of this section.

(iv) Transport an alien in possession of a completed and signed Guam-CNMI Visa Waiver Information Form (CBP Form I–736), and

(v) Transport an alien in possession of completed I–94, Arrival-Departure Record (CBP Form I–94).

(6) *Bonding.* The Secretary may require a bond on behalf of an alien seeking admission under the Guam-CNMI Visa Waiver Program, in addition to the requirements enumerated in this section, when the Secretary deems it appropriate. Such bonds may be required of an individual alien or of an identified subset of participants.

(7) *Maintenance of status.* (i) *Satisfactory departure.* If an emergency prevents an alien admitted under the Guam-CNMI Visa Waiver Program, as set forth in this paragraph (q), from departing from Guam or the CNMI within his or her period of authorized stay, an immigration officer having jurisdiction over the place of the alien's temporary stay may, in his or her discretion, grant a period of satisfactory departure not to exceed 15 days. If departure is accomplished during that period, the alien is to be regarded as having satisfactorily accomplished the visit without overstaying the allotted time.

(8) *Inadmissibility and Deportability.* (i) *Determinations of inadmissibility.* (A) An alien who applies for admission under the provisions of the Guam-CNMI Visa Waiver Program, who is determined by an immigration officer to be inadmissible to Guam or the CNMI under one or more of the grounds of inadmissibility listed in section 212 of the Act (other than for lack of a visa), or who is in possession of and presents fraudulent or counterfeit travel documents, will be refused admission into Guam or the CNMI and removed. Such refusal and removal shall be effected without referral of the alien to an immigration judge for further inquiry, examination, or hearing, except that an alien who presents himself or herself as an applicant for admission to Guam under the Guam-CNMI Visa Waiver Program, who applies for asylum, withholding of removal under section 241(b)(3) of the INA or withholding or deferral of removal under the regulations implementing Article 3 of the United Nations Convention Against Torture and Other Cruel, Inhuman or Degrading Treatment or Punishment must be issued a Form I–863, Notice of Referral to Immigration Judge, for a proceeding in accordance with 8 CFR 208.2(c)(1) and (2). The provisions of 8 CFR subpart 208 subpart A shall not apply to an alien present or arriving in the CNMI seeking to apply for asylum prior to January 1, 2015. No application for asylum may be filed pursuant to section 208 of the Act by an alien present or arriving in the CNMI prior to January 1, 2015; however, aliens physically present in the CNMI during the transition period who express a fear of persecution or torture only may establish eligibility for withholding of removal pursuant to INA 241(b)(3) or pursuant to the regulations implementing Article 3 of the United Nations Convention Against Torture and Other Cruel, Inhuman or Degrading Treatment or Punishment.

(B) The removal of an alien under this section may be deferred if the alien is paroled into the custody of a Federal, State, or local law enforcement agency for criminal prosecution or punishment. This section in no way diminishes the discretionary authority of the Secretary enumerated in section 212(d) of the Act.

(C) Refusal of admission under this paragraph shall not constitute removal for purposes of the Act.

(ii) *Determination of deportability.* (A) An alien who has been admitted to either Guam or the CNMI under the provisions of this section who is determined by an immigration officer to be deportable from either Guam or the CNMI under one or more of the grounds of deportability listed in section 237 of the Act, shall be removed from either Guam or the CNMI to his or her country of nationality or last residence. Such removal will be determined by DHS authority that has jurisdiction over the place where the alien is found, and will be effected without referral of the alien to an immigration judge for a determination of deportability, except that an alien admitted to Guam under the Guam-CNMI Visa Waiver Program who applies for asylum or other form of protection from persecution or torture must be issued a Form I–863 for a proceeding in accordance with 8 CFR 208.2(c)(1) and (2). The provisions of 8 CFR part 208 subpart A shall not apply to an alien present or arriving in the CNMI seeking to apply for asylum prior to January 1, 2015. No application for asylum may be filed pursuant to section 208 of the INA by an alien present or arriving in the CNMI prior to January 1, 2015; however, aliens physically present or arriving in the CNMI prior to January 1, 2015, may apply for withholding of removal under section 241(b)(3) of the Act and withholding and deferral of removal under the regulations implementing Article 3 of the United Nations Convention Against Torture, Inhuman or Degrading Treatment or Punishment.

(B) Removal by DHS under paragraph (b)(1) of this section is equivalent in all respects and has the same consequences as removal after proceedings conducted under section 240 of the Act.

(iii) *Removal of inadmissible aliens who arrived by air or sea.* Removal of an alien from Guam or the CNMI under this section may be effected using the return portion of the round trip passage presented by the alien at the time of entry to Guam and the CNMI. Such removal shall be on the first available means of transportation to the alien's point of embarkation to Guam or the CNMI. Nothing in this part absolves the carrier of the responsibility to remove any inadmissible or deportable alien at carrier expense, as provided in the carrier agreement.

PART 214—NONIMMIGRANT CLASSES

■ 5. The authority citation for part 214 is revised to read as follows:

Authority: 8 U.S.C. 1101, 1102, 1103, 1182, 1184, 1186a, 1187, 1221, 1281, 1282, 1301–1305 and 1372; sec. 643, Pub. L. 104–208, 110 Stat. 3009–708; Pub. L. 106–386, 114 Stat. 1477–1480; section 141 of the Compacts of Free Association with the Federated States of Micronesia and the Republic of the Marshall Islands, and with the Government of Palau, 48 U.S.C. 1901 note, and 1931 note, respectively; Title VII of Pub. L. 110–229; 8 CFR part 2.

■ 6. Section 214.1 is amended by adding paragraph (c)(3)(viii), to read as follows:

§ 214.1 Requirements for admission, extension, and maintenance of status.

* * * * *

(c) * * *

(3) * * *

(viii) Any nonimmigrant admitted pursuant to the Guam-CNMI Visa Waiver Program, as provided in section 212(l) of the Act.

* * * * *

PART 215—CONTROLS OF ALIENS DEPARTING FROM THE UNITED STATES

■ 7. The general authority citation for part 215 is revised to read as follows:

Authority: 8 U.S.C. 1101; 1104; 1184; 1185 (pursuant to Executive Order 13323, published January 2, 2004); 1365a note. 1379, 1731–32.

■ 8. Section 215.1 is revised by amending paragraphs (e), (g), and (j) to read as follows:

§ 215.1 Definitions.

* * * * *

(e) The term *United States* means the several States, the District of Columbia, Puerto Rico, the Virgin Islands, Guam, American Samoa, Swains Island, the Commonwealth of the Northern Mariana Islands (beginning June 1, 2009), and all other territory and waters, continental and insular, subject to the jurisdiction of the United States.

* * * * *

(g) The term *geographical part of the United States* means:

(1) The continental United States,

(2) Alaska,

(3) Hawaii,

(4) Puerto Rico,

(5) The Virgin Islands,

(6) Guam,

(7) American Samoa,

(8) Swains Island, or

(9) The Commonwealth of the Northern Mariana Islands (beginning June 1, 2009).

* * * * *

(j) The term *port of departure* means a port in the continental United States, Alaska, Guam, Hawaii, Puerto Rico, the Commonwealth of the Northern Mariana Islands (beginning June 1, 2009), or the Virgin Islands, designated as a port of entry by the Secretary, or in exceptional circumstances such other place as the departure-control officer may, in his discretion, designate in an individual case, or a port in American Samoa, or Swains Island, designated as a port of entry by the chief executive officer thereof.

* * * * *

PART 233—CONTRACTS WITH TRANSPORTATION LINES

■ 9. The authority for part 233 is revised to read as follows:

Authority: 8 U.S.C. 1101, 1103, 1182, 1221, 1228, 1229, 8 CFR part 2.

■ 10. Add § 233.6 to read as follows:

§ 233.6 Aliens entering Guam or the Commonwealth of the Northern Mariana Islands pursuant to Title VII of Public Law 110–229, ''Consolidated Natural Resources Act of 2008.''

A transportation line bringing aliens to Guam or the Commonwealth of the Northern Mariana Islands under the visa waiver provisions of § 212.1(q) of this chapter must enter into an agreement on CBP Form I–760. Such agreements must be negotiated directly by Customs and Border Protection and head offices of the transportation lines.

PART 235—INSPECTION OF PERSONS APPLYING FOR ADMISSION

■ 11. The authority for Part 235 continues to read as follows:

Authority: 8 U.S.C. 1101 and note, 1103, 1183, 1185 (pursuant to E.O. 13323, published January 2, 2004), 1201, 1224, 1225, 1226, 1228, 1365a note, 1379, 1731–32; 8 U.S.C. 1185 note (section 7209 of Pub. L. 108–458).

■ 12. Section 235.5(a) is revised to read as follows:

§ 235.5 Preinspection.

(a) *In United States territories and possessions.* In the case of any aircraft proceeding from Guam, the Commonwealth of the Northern Mariana Islands (beginning June 1, 2009), Puerto Rico, or the United States Virgin Islands destined directly and without touching at a foreign port or place, to any other of such places, or to one of the States of the United States or the District of Columbia, the examination of the passengers and crew required by the Act may be made prior to the departure of the aircraft, and in such event, final determination of admissibility will be made immediately prior to such departure. The examination will be conducted in accordance with sections 232, 235, and 240 of the Act and 8 CFR parts 235 and 240. If it appears to the immigration officer that any person in the United States being examined under this section is prima facie removable from the United States, further action with respect to his or her examination will be deferred and further proceedings regarding removability conducted as provided in section 240 of the Act and 8 CFR part 240. When the foregoing inspection procedure is applied to any aircraft, persons examined and found admissible will be placed aboard the aircraft, or kept at the airport separate and apart from the general public until they are permitted to board the aircraft. No other person will be permitted to depart on such aircraft until and unless he or she is found to be admissible as provided in this section.

* * * * *

19 CFR Chapter 1—Amendments

PART 4—VESSELS IN FOREIGN AND DOMESTIC TRADES

■ 13. The general authority for part 4 continues, and the specific authority citation for § 4.7b is revised to read as follows:

Authority: 5 U.S.C 301; 19 U.S.C. 66; 1431, 1433, 1434, 1624, 2071 note; 46 U.S.C. App. 3, 91.

* * * * *

Section 4.7b also issued under 8 U.S.C. 1101, 1221;

* * * * *

■ 14. In § 4.7b(a), the definition of ''United States'' is revised to read as follows:

§ 4.7b Electronic passenger and crew arrival manifests.

(a) * * *

United States. ''United States'' means the continental United States, Alaska, Hawaii, Puerto Rico, Guam, the Virgin Islands of the United States, and the Commonwealth of the Northern Mariana Islands (beginning June 1, 2009).

* * * * *

PART 122—AIR COMMERCE REGULATIONS

■ 15. The general authority for part 122 continues, and the specific authority citation for § 122.49a is revised to read as follows:

Authority: 5 U.S.C 301; 19 U.S.C. 58b, 66, 1431, 1433, 1436, 1448, 1459, 1590, 1594, 1623, 1624, 1644, 1644a, 2071 note.

* * * * *

Section 122.49a also issued under 8 U.S.C. 1101, 1221, 19 U.S.C. 1431, 49 U.S.C. 44909.

* * * * *

■ 16. In § 122.49a(a), the definition of ''United States'' is revised to read as follows:

§ 122.49a Electronic manifest requirement for passengers onboard commercial aircraft arriving in the United States.

(a) * * *

United States. ''United States'' means the continental United States, Alaska, Hawaii, Puerto Rico, Guam, the Commonwealth of the Northern Mariana Islands (beginning June 1, 2009), and the Virgin Islands of the United States.

* * * * *

Paul A. Schneider,

Deputy Secretary.

[FR Doc. E9–942 Filed 1–15–09; 8:45 am]

BILLING CODE 9111–14–P

DEPARTMENT OF HOMELAND SECURITY

8 CFR Parts 204, 214 and 215

[CIS No. 2432–07; DHS Docket No. USCIS–2007–0058]

RIN 1615–AB67

Changes to Requirements Affecting H–2B Nonimmigrants and Their Employers; Correction

AGENCY: U.S. Citizenship and Immigration Services, DHS.

ACTION: Final rule; correction.

SUMMARY: With this amendment, the Department of Homeland Security (DHS) corrects an inadvertent error that was made to the Final Rule titled ''Changes to Requirements Affecting H–2B Nonimmigrants and Their Employers'' that was published in the **Federal Register** on December 19, 2008, at 73 FR 78104.

DATES: This rule is effective January 18, 2009.

FOR FURTHER INFORMATION CONTACT: Hiroko Witherow, Business and Trade Services Division, Service Center Operations, U.S. Citizenship and Immigration Services, Department of Homeland Security, 20 Massachusetts Avenue, NW., Second Floor, Washington, DC 20529–2140, telephone (202) 272–9135.

SUPPLEMENTARY INFORMATION:

Need for Correction

On December 19, 2008, the Department of Homeland Security published a final rule in the **Federal Register** at 73 FR 78104 changing requirements affecting H–2B nonimmigrants and their employers. At 8 CFR 214.2, DHS inadvertently:

- Stated in amendment 5.aa that a new sentence would be added at the end of paragraph (h)(11)(i)(A) instead of saying that the last sentence of the paragraph was being revised;
- Omitted a period after the paragraph heading for paragraph (h)(6)(C); and
- Ended the sentence in paragraph (h)(11)(iii)(A)(*2*) with a '':'' instead of a '';''.

Correction of Publication

■ Accordingly, the publication on December 19, 2008, at 73 FR 78104 of the interim final rule that was the subject of FR Doc. E8–30094 is corrected as follows:

PART 214–NONIMMIGRANT CLASSES

§ 214.2 [Corrected]

■ 1. On page 78127, third column, amendment 5.aa., revise the amendatory language from ''Adding a new sentence to the end of paragraph (h)(11)(i)(A)'' to ''Revising the last sentence of paragraph (h)(11)(i)(A)''.

■ 2. On page 78128, second column, add a period immediately after the word ''*revocation*'' in the heading to paragraph (h)(6)(C).

■ 3. On page 78130, in the second column, at the end of paragraph (h)(11)(iii)(A)(*2*), revise ''; or'' to read ''; or''.

Dated: January 13, 2009.

Michael Aytes,

Acting Deputy Director, U.S. Citizenship and Immigration Services.

[FR Doc. E9–910 Filed 1–15–09; 8:45 am]

BILLING CODE 9111–97–P

DEPARTMENT OF HOMELAND SECURITY

8 CFR Part 235

[DHS–2005–0037]

RIN 1601–AA35; RIN 1600–AA00

United States Visitor and Immigrant Status Indicator Technology Program (''US–VISIT''); Enrollment of Additional Aliens in US–VISIT; Authority To Collect Biometric Data from Additional Travelers and Expansion to the 50 Most Highly Trafficked Land Border Ports of Entry

AGENCY: National Protection and Programs Directorate, DHS.

ACTION: Final rule; correction.

SUMMARY: This document contains corrections to the final rule which was published in the **Federal Register** on December 19, 2008. 73 FR 77473. The pertinent regulations relate to the collection of biometric identifiers during the inspection of aliens at United States ports of entry.

DATES: Effective on January 18, 2009.

FOR FURTHER INFORMATION, CONTACT: Helen deThomas, Senior Policy Analyst, US–VISIT, Department of Homeland Security, 1616 Fort Myer Drive, 18th Floor, Arlington, Virginia 22209, (202) 298–5200.

SUPPLEMENTARY INFORMATION: On December 19, 2008, the Department of Homeland Security (DHS) published a final rule amending 8 CFR 235.1(f)(1)(ii) to expand the population of aliens subject to US–VISIT requirements to include, among others, lawful permanent residents. That final rule becomes effective January 18, 2009. 73 FR 77473.

As discussed in the preamble to the final rule, DHS will require additional aliens to provide fingerprints ''at the time of inspection'' at the United States border ports of entry, including lawful permanent residents. 73 FR at 77474–75.

As discussed in the preamble to the final rule,

> LPRs are still subject to entry, documentation, and removability requirements to the United States. LPRs are aliens. *See* sections 101, 212, 237 of the INA (8 U.S.C. 1101, 1182, 1227) and 8 CFR 235.1(b), (f)(1)(i). Although LPRs are not technically regarded as seeking admission to the United States if they are returning from a stay of less than 180 days under section 101(a)(13)(C)(ii) of the INA (8 U.S.C. 1101(a)(13)(C)(ii)), they remain subject to the admissibility requirements of section 212 of the INA (8 U.S.C. 1182) because of their status as an alien and not a United States citizen. Accordingly, DHS must determine whether an LPR is admissible to the United States whenever the LPR arrives at a port of entry, as well as determine whether an LPR is removable from the United States based on intervening facts since the time LPR status was granted, and initial background checks conducted, which may have been many years ago.

73 FR at 77475.

Through technical drafting oversight, DHS did not amend the regulatory text of section 235.1(f)(1)(ii) in the final rule to remove references to aliens seeking admission. This correction is intended to ensure that the regulatory language mirrors the intent of the preamble—that DHS may require lawful permanent residents to provide biometrics in order to determine, among other things, that alien's identity and whether he or she has properly maintained his or her permanent resident status while in the United States.

Accordingly, in FR Doc. E8–30095, published on December 19, 2008, make the following correction. On page 77491, in the second column, revise the regulatory text under instruction 4 to read:

§ 235.1 Scope of examination.

* * * * *

(f) * * *

(1) * * *

(ii) The Secretary of Homeland Security or his designee may require any alien, other than aliens exempted under paragraph (iv) of this section or Canadian citizens under section 101(a)(15)(B) of the Act who are not otherwise required to present a visa or be issued Form I–94 or Form I–95 for admission or parole into the United

States, to provide fingerprints, photograph(s) or other specified biometric identifiers, documentation of his or her immigration status in the United States, and such other evidence as may be requested to determine the alien's identity and whether he or she has properly maintained his or her status while in the United States and/or whether he or she is admissible. The failure of an alien at the time of inspection to comply with any requirement to provide biometric identifiers may result in a determination that the alien is inadmissible under section 212(a) of the Immigration and Nationality Act or any other law.

* * * * *

Paul A. Schneider,

Deputy Secretary.

[FR Doc. E9–988 Filed 1–15–09 8:45 am]

BILLING CODE 9111–9P–P

DEPARTMENT OF HOMELAND SECURITY

8 CFR Part 274a

[CIS No. 2441–08; Docket No. USCIS–2008–0001]

RIN 1615–AB69

Documents Acceptable for Employment Eligibility Verification; Correction

AGENCY: U.S. Citizenship and Immigration Services, DHS.

ACTION: Interim rule; Correction.

SUMMARY: With this amendment, the Department of Homeland Security (DHS) corrects two inadvertent errors that were made in the Employment Eligibility Verification interim rule published in the **Federal Register** on December 17, 2008, at 73 FR 76505.

DATES: *Effective Date:* Effective February 2, 2009.

FOR FURTHER INFORMATION CONTACT: Stephen McHale, Verification Division, U.S. Citizenship and Immigration Services, Department of Homeland Security, 470 L'Enfant Plaza East, SW., Suite 8001, Washington, DC 20529, telephone (888) 464–4218 or e-mail at *Everify@dhs.gov*.

SUPPLEMENTARY INFORMATION:

Need for Correction

On December 17, 2008, U.S. Citizenship and Immigration Services (USCIS) published an interim rule at 73 FR 76505 amending its regulations governing the types of acceptable identity and employment authorization documents and receipts that employees may present to their employers for completion of the Form I–9, Employment Eligibility Verification.

The rule inadvertently included extraneous language in two paragraphs at 8 CFR 274a.2(b)(1)(vi)(B)(*1*) and (*2*). These paragraphs describe a type of receipt that can be presented by lawful permanent residents to their employers in lieu of the Form I–551, Permanent Resident Card, for completion of the Form I–9.

As explained in the preamble on page 76507, column 3, in the first sentence under the paragraph heading, ''Adding references to Form I–94A,'' (*see also* the last sentence under the paragraph heading, ''C. Revising References to Temporary I–551s''), the only change the rule was making to 8 CFR 274a.2(b)(1)(vi)(B) was to add references to the Form I–94A next to each reference to the Form I–94, Arrival-Departure Record. In error, the regulatory text amending 8 CFR 274a.2(b)(1)(vi)(B)(*1*) at 73 FR 76511 inadvertently included the extraneous language, ''with an unexpired foreign passport'' in the sentence, ''Presents the arrival portion of Form I–94 or Form I–94A with an unexpired foreign passport containing an unexpired 'Temporary I–551' stamp and a photograph of the individual, which is designated for purposes of this section as a receipt for Form I–551;''.

In addition, the regulatory text amending 8 CFR 274a.2(b)(1)(vi)(B)(*2*) inadvertently included the extraneous language, ''or statement,'' in the sentence, ''Presents the Form I–551 by the expiration date of the 'Temporary I–551' stamp or, if the stamp or statement has no expiration date, within one year from the issuance date of the arrival portion of the Form I–94 or Form I–94A;''. Note that DHS places only Temporary I–551 ''stamps'' and not Temporary I–551 ''statements'' on Forms I–94 when issuing temporary evidence of lawful permanent resident status using Forms I–94.

This document corrects these two errors by removing the extraneous language from the regulatory text.

List of Subjects in 8 CFR Part 274a

Administrative practice and procedure, Aliens, Employment, Penalties, Reporting and recordkeeping requirements.

■ For the reasons set forth in the preamble, FR Doc E8–29874, beginning on page 76505 in the **Federal Register** of Wednesday, December 17, 2008, the following corrections are made:

■ 1. On page 76511, in the third column, in § 274a.2, paragraphs (b)(1)(vi)(B)(*1*) and (*2*) are corrected to read as follows:

§ 274a.2 Verification of identity and employment authorization.

* * * * *

(b) * * *

(1) * * *

(vi) * * *

(B) * * *

(*1*) Presents the arrival portion of Form I–94 or Form I–94A containing an unexpired ''Temporary I–551'' stamp and a photograph of the individual, which is designated for purposes of this section as a receipt for Form I–551; and

(*2*) Presents the Form I–551 by the expiration date of the ''Temporary I–551'' stamp or, if the stamp has no expiration date, within one year from the issuance date of the arrival portion of the Form I–94 or Form I–94A; or

* * * * *

Dated: January 13, 2009.

Michael Aytes,

Acting Deputy Director, U.S. Citizenship and Immigration Services.

[FR Doc. E9–909 Filed 1–15–09; 8:45 am]

BILLING CODE 9111–97–P

DEPARTMENT OF HOMELAND SECURITY

U.S. Customs and Border Protection

DEPARTMENT OF THE TREASURY

19 CFR Part 12

[CBP Dec. 09–03]

RIN 1505–AC08

Import Restrictions Imposed on Certain Archaeological Material from China

AGENCIES: U.S. Customs and Border Protection, Department of Homeland Security; Department of the Treasury.

ACTION: Final rule.

SUMMARY: This final rule amends the U.S. Customs and Border Protection (CBP) regulations to reflect the imposition of import restrictions on certain archaeological material from the People's Republic of China (China). These restrictions are being imposed pursuant to an agreement between the United States and China that has been entered into under the authority of the Convention on Cultural Property Implementation Act in accordance with the United Nations Educational, Scientific and Cultural Organization (UNESCO) Convention on the Means of Prohibiting and Preventing the Illicit Import, Export and Transfer of Ownership of Cultural Property. The final rule amends CBP regulations by adding China to the list of countries for

which a bilateral agreement has been entered into for imposing cultural property import restrictions. The final rule also contains the designated list that describes the types of archaeological articles to which the restrictions apply.

DATES: *Effective Date:* January 16, 2009.

FOR FURTHER INFORMATION CONTACT: For legal aspects, George Frederick McCray, Esq., Chief, Intellectual Property Rights and Restricted Merchandise Branch, Regulations and Rulings, Office of International Trade, (202) 325–0082. For operational aspects, Michael Craig, Chief, Interagency Requirements Branch, Trade Policy and Programs, Office of International Trade, (202) 863–6558.

SUPPLEMENTARY INFORMATION:

Background

The value of cultural property, whether archaeological or ethnological in nature, is immeasurable. Such items often constitute the very essence of a society and convey important information concerning a people's origin, history, and traditional setting. The importance and popularity of such items regrettably makes them targets of theft, encourages clandestine looting of archaeological sites, and results in their illegal export and import.

The United States shares in the international concern for the need to protect endangered cultural property. The appearance in the United States of stolen or illegally exported artifacts from other countries where there has been pillage has, on occasion, strained our foreign and cultural relations. This situation, combined with the concerns of museum, archaeological, and scholarly communities, was recognized by the President and Congress. It became apparent that it was in the national interest for the United States to join with other countries to control illegal trafficking of such articles in international commerce.

The United States joined international efforts and actively participated in deliberations resulting in the 1970 United Nations Educational, Scientific and Cultural Organization (UNESCO) Convention on the Means of Prohibiting and Preventing the Illicit Import, Export and Transfer of Ownership of Cultural Property (823 U.N.T.S. 231 (1972)). U.S. acceptance of the 1970 UNESCO Convention was codified into U.S. law as the ''Convention on Cultural Property Implementation Act'' (Pub. L. 97–446, 19 U.S.C. 2601 *et seq.*) (the Act). This was done to promote U.S. leadership in achieving greater international cooperation towards preserving cultural treasures that are of importance to the nations from where they originate and contribute to greater international understanding of our common heritage.

Since the Act entered into force, import restrictions have been imposed on the archaeological and ethnological materials of a number of signatory nations. These restrictions have been imposed as a result of requests for protection received from those nations. More information on import restrictions can be found on the International Cultural Property Protection Web site (*http://culturalheritage.state.gov*).

This document announces that import restrictions are now being imposed on certain archaeological materials from China (for a definition of China, please see *http://www.state.gov/s/inr/rls/4250.htm*).

Determinations

Under 19 U.S.C. 2602(a)(1), the United States must make certain determinations before entering into an agreement to impose import restrictions under 19 U.S.C. 2602(a)(2). On May 13, 2008, the Assistant Secretary for Educational and Cultural Affairs, Department of State, made the determinations required under the statute with respect to certain archaeological materials originating in China that are described in the designated list set forth below in this document. These determinations include the following: (1) That the cultural patrimony of China is in jeopardy from the pillage of irreplaceable archaeological materials representing China's cultural heritage from the Paleolithic Period (c. 75,000 B.C.) through the end of the Tang Period (A.D. 907) and irreplaceable monumental sculpture and wall art at least 250 years old (19 U.S.C. 2602(a)(1)(A)); (2) that the Chinese government has taken measures consistent with the Convention to protect its cultural patrimony (19 U.S.C. 2602(a)(1)(B)); (3) that import restrictions imposed by the United States would be of substantial benefit in deterring a serious situation of pillage and remedies less drastic are not available (19 U.S.C. 2602(a)(1)(C)); and (4) that the application of import restrictions as set forth in this final rule is consistent with the general interests of the international community in the interchange of cultural property among nations for scientific, cultural, and educational purposes (19 U.S.C. 2602(a)(1)(D)). The Assistant Secretary also found that the materials described in the determinations meet the statutory definition of ''archaeological material of the state party'' (19 U.S.C. 2601(2)).

The Agreement

On January 14, 2009, the United States and China entered into a bilateral agreement pursuant to the provisions of 19 U.S.C. 2602(a)(2). The agreement enables the promulgation of import restrictions on certain archaeological materials representing China's cultural heritage from the Paleolithic Period through the end of the Tang Period (A.D. 907) and monumental sculpture and wall art at least 250 years old. For the purposes of the agreement, the restricted Paleolithic objects date from approximately c. 75,000 B.C. A list of the categories of archaeological materials subject to the import restrictions is set forth later in this document.

Restrictions and Amendment to the Regulations

In accordance with the Agreement, importation of materials designated below are subject to the restrictions of 19 U.S.C. 2606 and § 12.104g(a) of the Customs and Border Protection (CBP) Regulations (19 CFR 12.104g(a)) and will be restricted from entry into the United States unless the conditions set forth in 19 U.S.C. 2606 and § 12.104c of the regulations (19 CFR 12.104c) are met. CBP is amending § 12.104g(a) of the CBP Regulations (19 CFR 12.104g(a)) to indicate that these import restrictions have been imposed.

Material Encompassed in Import Restrictions

The bilateral agreement between the United States and China includes, but is not limited to, the categories of objects described in the designated list set forth below. These categories of objects are subject to the import restrictions set forth above, in accordance with the above explained applicable law and the regulation amended in this document (19 CFR 12.104(g)(a)).

Designated List of Archaeological Material of China

Simplified Chronology

Paleolithic period (c. 75,000–10,000 BC).
Neolithic period (c. 10,000–2000 BC).
Erlitou and other Early Bronze Age cultures (c. 2000–1600 BC).
Shang Dynasty and other Bronze Age Cultures (c. 1600–1100 BC).
Zhou Dynasty (c. 1100–256 BC).
Qin Dynasty (221–206 BC).
Han Dynasty (206 BC–AD 220).
Three Kingdoms (AD 220–280).
Jin Dynasty (AD 265–420).
Southern and Northern Dynasties (AD 420–589).
Sui Dynasty (AD 581–618).

Tang Dynasty (AD 618–907).

I. Ceramic

The ceramic tradition in China extends back to at least the 6th millennium B.C. and encompasses a tremendous variety of shapes, pastes, and decorations. Chinese ceramics include earthenwares, stonewares and porcelains, and these may be unglazed, glazed, underglazed, painted, carved, impressed with designs, decorated with applied designs or a combination of all of these. Only the most distinctive are listed here. Vessels are the most numerous and varied types of ceramics. Ceramic sculptures include human, animal, mythic subjects, and models of scenes of daily life. Architectural elements include decorated bricks, baked clay tiles with different glaze colors, and acroteria (ridge pole decorations).

A. Vessels

1. Neolithic Period.

Archaeological work over the past thirty years has identified numerous cultures of the Neolithic period from every part of China, all producing distinctive ceramics. Early Neolithic cultures (c. 7500–5000 BC) include such cultures as Pengtoushan (northern Hunan Province), Peiligang (Henan Province), Cishan (Hebei Province), Houli (Shandong Province), Xinglongwa (eastern Inner Mongolia and Liaoning Province), Dadiwan and Laoguantai (Gansu and Shaanxi Province), Xinle (Liaodong peninsula, Liaoning Province), among others. Examples of Middle Neolithic cultures (c. 5000–3000 BC) include Yangshao (Shaanxi, Shanxi, and Henan Provinces), Daxi (eastern Sichuan and western Hubei Provinces), Hemudu (lower Yangzi River valley, Zhejiang Province), Majiabang (Lake Tai/Taihu area to Hangzhou Bay, Zhejiang and southern Jiangsu Provinces), Hongshan (eastern Inner Mongolia, Liaoning, and northern Hebei Provinces), Dawenkou (Shandong Province), among others. Later Neolithic cultures (c. 3500–2000 BC) include Liangzhu (lower Yangzi River Valley), Longshan (Shandong and Henan Provinces), Taosi (southern Shanxi Province), Qujialing (middle Yangzi River valley in Hubei and Hunan Provinces), Baodun (Chengdu Plain, Sichuan Province), Shijiahe (western Hubei Province), and Shixia (Guangdong Province), among many others.

Neolithic vessels are sometimes inscribed with pictographs. When present, they are often single incised marks on vessels of the Neolithic period, and multiple incised marks (sometimes around the rim) on late Neolithic vessels.

a. *Yangshao:* The ''classic'' form of Neolithic culture, c. 5000–3000 BC in Shanxi, Shaanxi, Gansu, Henan, and adjacent areas. Hand-made, red paste painted with black, sometimes white motifs, that are abstract and depict plants, animals, and humans. Forms include bulbous jars with lug handles, usually with a broad shoulder and narrow tapered base, bowls, open mouth vases, and flasks (usually undecorated) with two lug handles and a pointed base.

b. *Shandong Longshan:* Vessels are wheel-made, black, very thin-walled, and highly polished, sometimes with open cut-out decoration. Forms include tall stemmed cups (*dou*), tripods (*li* and *ding*), cauldrons, flasks, and containers for water or other liquids.

2. Erlitou, Shang, and Zhou Vessels.

a. Vessels are mostly utilitarian gray paste cooking tripod basins, cooking and storage jars, wide mouth containers, pan circular dishes with flat base, and broad three legged version of pan. The latter also appear in fine gray and black pastes. The forms of these include the kettle with lid (*he*), tripod liquid heating vessel with pouring spout (*jue*), tripod cooking pot (*ding*), goblet or beaker (*gu*), tripod water heater without pouring spout (*jia*).

b. *Shang and Zhou:* Vessels may be wheel-made or coiled. Vessels can be utilitarian gray paste cooking vessels, often cord-impressed, or more highly decorated types. Surfaces can be impressed and glazed yellow to brown to dark green. White porcelain-like vessels also occur. Forms include those of the Erlitou plus wide-mouth containers and variously shaped jars and serving vessels.

3. Qin through Southern and Northern Vessels.

Most vessels are wheel-made. The main developments are in glazing. Earthenwares may have a lead-based shiny green glaze. Grey stonewares with an olive color are called Yue ware.

4. Sui and Tang Vessels.

Note: Most vessels are wheel-made.

a. *Sui:* Pottery is plain or stamped.

b. *Tang:* A three-color glazing technique is introduced for earthenwares (*sancai*). Green, yellow, brown, and sometimes blue glazes are used together on the same vessel. For stoneware, the olive glaze remains typical.

B. Sculpture

1. *Neolithic:* Occasional small figurines of animals or humans. From the Hongshan culture come human figures, some of which appear pregnant, and human faces ranging from small to life size, as well as life-size and larger fragments of human body parts (ears, belly, hands, and others).

2. *Shang through Eastern Zhou:* Ceramic models and molds for use in the piece-mold bronze casting process. Examples include frontal animal mask (*taotie*), birds, dragons, spirals, and other decorative motifs.

3. *Eastern Zhou, Qin and Han:* Figures are life-size or smaller. They are hand- and mold-made, and may be unpainted, painted, or glazed. Figures commonly represent warriors on foot or horseback, servants, acrobats, and others. Very large numbers date to the Han Dynasty. In some cases, the ceramic male and female figurines are anatomically accurate, nude, and lack arms (in these cases, the figures were originally clad in clothes and had wooden arms that have not been preserved). Other ceramic objects, originally combined to make scenes, take many forms including buildings, courtyards, ships, wells, and pig pens.

4. *Tang:* Figures depicting Chinese people, foreigners, and animals may be glazed or unglazed with added paint. Approximately 15 cm to 150 cm high.

C. Architectural Decoration and Molds

1. *Han:* Bricks having a molded surface with geometric or figural design. These depict scenes of daily life, mythic and historical stories, gods, or demons.

2. *Three Kingdoms through Tang:* Bricks may be stamped or painted with the same kinds of scenes as in the Han Dynasty.

3. *Han through Tang:* Roof tiles may have a corded design. Eaves tiles with antefixes have Chinese characters or geometric designs. Glazed acroteria (ridge pole decorations) in owl tail shape.

II. Stone

A. Jade

Ancient Chinese jade is, for the most part, the mineral nephrite. It should be noted, however, that many varieties of hard stone are sometimes called ''jade'' (*yu*) in Chinese. True nephrite jade can range in color from white to black, and from the familiar shades of green to almost any other color. Jade has been valued in China since the Neolithic period. Types commonly encountered include ornaments, amulets, jewelry, weapons, insignia, and vessels.

1. Ornaments and jewelry.

a. *Neolithic (Hongshan):* Types are mostly hair cylinders or pendant ornamental animal forms such as turtles, fish-hawks, cicadas, and

dragons. One common variety is the so-called ''pig-dragon'' (*zhulong*), a circular ring form with a head having wrinkled snout (the ''pig'') and long dragon-like body.

b. *Neolithic (Liangzhu):* Types include awl-shaped pendants, three-prong attachments, openwork crown-shapes, beads, birds, fishes, frogs.

c. *Neolithic (Shandong Longshan) and Erlitou:* Ornaments for body and clothing such as stick pins and beads.

d. *Shang and Zhou:* Earrings, necklaces, pectorals, hair stickpins, ornaments, sometimes in the shape of small animals, dragons, or other forms; belt buckles, and garment hooks. During the Zhou Dynasty, there appear elaborate pectorals made of jade links, and jade inlay on bronze.

e. *Qin, Han and Three Kingdoms:* Pectoral ornaments and small-scale pendants continue to be produced. Types include pectoral slit earrings, large disks (*bi*), openwork disks (*bi*), openwork plaques showing a mythic bird (*feng*), and various types of rings. Entire burial suits of jade occur during the Han Dynasty. More frequently occurring are Han Dynasty belthooks, decorated with dragons, and garment hooks.

2. Weapons, Tools, and Insignia.

a. *Neolithic (Liangzhu):* Types include weapons such as broad-bladed axes (*yue*), long rectangular or trapezoidal blades (*zhang*), often with holes along the back (non-sharpened) edge for hafting; tools such as hoe, adze, knife blades.

b. *Neolithic (Shandong Longshan) and Erlitou:* Broad axe (*yue*) and halberd or ''dagger axe'' (*ge*).

c. *Shang and Zhou:* Broad axes (*yue*) and halberd (*ge*) may be attached to turquoise inlaid bronze shafts.

d. *Neolithic (Liangzhu) to Zhou:* Tool types include hoe, adze, knife blades.

e. *Neolithic (Shandong Longshan) to Zhou:* Insignia blades based on tool shapes such as long hoe, flat adze, and knife.

3. Ceremonial paraphernalia.

Neolithic—Han: Types include flat circular disks (*bi*) with a cut-out central hole and prismatic cylindrical tubes (*cong*), usually square on the outside with a circular hole through its length, often with surface carving that segments the outer surface into three or more registers. The *cong* tubes are often decorated with a motif on each corner of each register showing abstract pairs of eyes, animal and/or human faces. *Cong* tubes, while most closely linked with the Liangzhu culture, were widely distributed among the many late Neolithic cultures of China.

4. Vessels.

a. *Shang through Han:* Types include eared cups and other tableware.

b. *Qin through Tang:* Tableware forms such as cups, saucers, bowls, vases, and inkstones.

5. Other.

Chimes from all eras may be rectangular or disk-shaped.

B. Amber

Amber is used for small ornaments from the Neolithic through Tang dynasties.

C. Other Stone

1. Tools and Weapons.

a. *Paleolithic and later eras:* Chipped lithics from the Paleolithic and later eras including axes, blades, scrapers, arrowheads, and cores.

b. *Neolithic and later eras:* Ground stone including hoes, sickles, spades, axes, adzes, pestles, and grinders.

c. *Erlitou through Zhou:* As with jade, weapon types include blades, broad axes (*yue*), and halberds (*ge*).

2. Sculpture.

Stone becomes a medium for large-scale images in the Qin and Han. It is put to many uses in tombs. It also plays a major role in representing personages associated with Buddhism, Daoism, and Confucianism.

a. Sculpture in the round.

Note: This section includes monumental sculpture at least 250 years old.

i. *Shang:* Sculpture includes humans, often kneeling with hands on knees, sometimes with highly decorated incised robes, owls, buffalo, and other animals. The Jinsha site near Chengdu, Sichuan, dating to the late Shang Dynasty, has yielded numerous examples of stone figurines in a kneeling position, with carefully depicted hair parted in the center, and with hands bound behind their back.

ii. *Han to Qing:* The sculpture for tombs includes human figures such as warriors, court attendants, and foreigners. Animals include horse, tiger, pig, bull, sheep, elephant, and fish, among many others.

iii. The sculpture associated with Buddhism is usually made of limestone, sandstone, schist and white marble. These be covered with clay, plaster, and then painted. Figures commonly represented are the Buddha and disciples in different poses and garments.

iv. The sculpture associated with Daoism is usually sandstone and limestone which may be covered and painted. Figures commonly represented are Laozi or a Daoist priest.

v. The sculpture associated with Confucianism represents Confucius and his disciples.

b. Relief Sculpture.

i. *Han:* Relief sculpture is used for all elements of tombs including sarcophagi, tomb walls, and monumental towers. Images include hunting, banqueting, historical events, processions, scenes of daily life, fantastic creatures, and animals.

ii. *Tang:* Tomb imagery now includes landscapes framed by vegetal motifs.

c. Art of cave or grotto temples.

Han—Qing: Note that this section includes monumental sculpture at least 250 years old. These temples, mostly Buddhist, combine relief sculpture, sculpture in the round, and sometimes mural painting. The sculptures in the round may be stone or composites of stone, wood, and clay and are painted with bright colors.

d. Stelae.

Han—Qing: Note that this section includes monumental sculpture at least 250 years old. Tall stone slabs set vertically, usually on a tortoise-shaped base and with a crown in the form of intertwining dragons. Stelae range in size from around 0.60m to 3m. Some include relief sculpture consisting of Buddhist imagery and inscription, and others are secular memorials with long memorial inscription on front and back faces.

3. Architectural Elements.

a. *Erlitou through Zhou:* Marble or other stone is used as a support for wooden columns and other architectural or furniture fixtures.

b. *Qing:* Note that this section includes monumental sculpture at least 250 years old. Sculpture is an integral part of Qing Dynasty architecture. Bridges, archways, columns, staircases and terraces throughout China are decorated with reliefs. Colored stones may be used, including small bright red, green, yellow and black ones. Statue bases are draped with imitations of embroidered cloths. Stone parapets are carved with small, elaborately adorned fabulous beasts.

4. Musical Instruments.

Neolithic through Han, and later: Chimestones, chipped and/or ground from limestone and other resonant rock. They may be highly polished, carved with images of animals or other motifs, and bear inscriptions in Chinese characters. They usually have a chipped or ground hole to facilitate suspension from a rack.

III. Metal

The most important metal in traditional Chinese culture is bronze (an alloy of copper, tin and lead), and it is used most frequently to cast vessels, weapons, and other military hardware. Iron artifacts are not as common,

although iron was used beginning in the middle of the Zhou Dynasty to cast agricultural tool types, vessels, weapons and measuring utensils. As with ceramics, only the most distinctive are listed here.

A. Bronze

1. Vessels.

Note: Almost any bronze vessel may have an inscription in archaic Chinese characters.

a. *Erlitou:* Types include variations on pots for cooking, serving and eating food including such vessels as the cooking pot (*ding*), liquid heating vessel with open spout (*jue*), or with tubular spout (*he*), and water heater without spout (*jia*).

b. *Shang:* Bronze vessels and implements include variations on the ceramic posts used for cooking, serving, and eating including but not limited to the tripod or quadripod cooking pot (*ding*), water container (*hu*), and goblet (*gu*). Animal-shaped vessels include the owl, mythic bird, tiger, ram, buffalo, deer, and occasionally elephant and rhinoceros. Most types are decorated with symbolic images of a frontal animal mask (*taotie*) flanked by mythical birds and dragons, or with simpler images of dragons or birds, profile cicadas, and geometric motifs, including a background ''cloud and thunder'' pattern of fine squared spirals.

c. *Zhou:* Types include those of previous eras. Sets begin to be made with individual vessels having similar designs. Late innovations are made to surface treatment: Relief decorations of intertwined dragons and feline appendages; inlay with precious stones and gems; inlay with other metals such as gold and silver; gilding; pictorial narratives featuring fighting, feasting and rituals; and various geometric designs.

d. *Qin and Han:* All vessel types and styles popularized of the immediately preceding era continue.

2. Sculpture.

a. *Shang and other Bronze Age Cultures through Zhou:* Wide variety of cast human and animal sculptures. Particularly distinctive are the bronze sculptures from the Sanxingdui Culture in Sichuan which include life-sized human heads (often with fantastic features and sometimes overlaid with gold leaf) and standing or kneeling figurines ranging in size from 5cm to more than 2 meters; tree-shaped assemblages; birds, dragons, and other real and fantastic animals. Bronze sculpture from Chu and related cultures include supports for drums and bell sets (often in the shape of guardian figures, fantastic animals, or intertwined snakes).

b. *Qin and Han:* Decorative bronze types include statues of horses, lamps in the shape of female servants, screen supports in the shape of winged immortals, incense burners in the shape of mountains, mirrors, and inlaid cosmetic boxes.

c. *Buddhist:* In the Han there first appear small portable images of Sakyamuni Buddha. During the next historical eras, such images proliferate and become more varied in terms of size and imagery. Most of these are free-standing, depicting such subjects as the historical Buddha Sakyamuni, Buddhas associated with paradises, Buddha's disciples, and scenes from the *Lotus Sutra.* Gilt bronzes are made from the Han to Tang.

3. Coins.

a. *Zhou Media of Exchange and Tool-shaped Coins:* Early media of exchange include bronze spades, bronze knives, and cowrie shells. During the 6th century BC, flat, simplified, and standardized cast bronze versions of spades appear and these constitute China's first coins. Other coin shapes appear in bronze including knives and cowrie shells. These early coins may bear inscriptions.

b. Later, tool-shaped coins began to be replaced by disc-shaped ones which are also cast in bronze and marked with inscriptions. These coins have a central round or square hole.

c. *Qin:* In the reign of Qin Shi Huangdi (221–210 BC) the square-holed round coins become the norm. The new Qin coin is inscribed simply with its weight, expressed in two Chinese characters *ban liang.* These are written in small seal script and are placed symmetrically to the right and left of the central hole.

d. *Han through Sui:* Inscriptions become longer, and may indicate that inscribed object is a coin, its value in relation to other coins, or its size. Later, the period of issue, name of the mint, and numerals representing dates may also appear on obverse or reverse. A new script, clerical (*lishu*), comes into use in the Jin.

e. *Tang:* The clerical script becomes the norm until 959, when coins with regular script (*kaishu*) also begin to be issued.

4. Musical Instruments.

a. *Shang:* Instruments include individual clapper-less bells (*nao*), singly and in sets. Barrel drums lay horizontally, have a saddle on top, and rest on four legs.

b. *Zhou through Tang:* Bells and bell sets continue to be important. The bells vary considerably in size in shape. Other instruments include mouth organs (*hulu sheng*), gongs, cymbals, and a variety of types of drums, including drums (*chunyu*) and large ''kettledrums'' from south and southwest China.

5. Tools and Weapons.

Tools and implements of all eras include needles, spoons, ladles, lifting poles, axes, and knives. Weapons and military gear include the broad axe, dagger axe, knives, spear points, arrowheads, helmets, chariot fittings, combination of spear and dagger (*ji*), cross-bow, and horse frontlets.

6. Miscellaneous.

Other bronze items include but are not limited to mirrors, furniture parts, and utensils such belt buckles, garment hooks, weights, measuring implements, incense burners, lamps, spirit trees, tallies, seals, rings, bells, and cosmetic containers.

B. Iron

Iron is used for such utilitarian objects as axes, hammers, chisels, and spades. At the end of the Zhou, steel swords with multi-faceted metal inlay are produced.

1. *Zhou through Han:* Bimetallic weapons such as iron-bladed swords and knives with a bronze hilt.

2. *Three Kingdoms through Sui:* Small scale Buddhist images are cast.

3. *Tang:* Large scale castings include Buddhist statues, bells, lions, dragons, human figures, and pagodas.

C. Gold and Silver

During the Shang and Zhou Dynasties, gold is used to produce jewelry and a limited number of vessel types, and as gilding, gold leaf, or inlay on bronze. Gold and silver become widely used in the Han Dynasty and remain so through the Tang Dynasty. Objects include vessels such as cups, ewers, jars, bowls; utensils such as lamps, containers, jewelry, liturgical wares, furniture parts; and Buddhist sculpture such as images of Buddha and reliquaries.

IV. Bone, Ivory, Horn, and Shell

Neolithic through Tang: The most important uses of these materials is for vessels, seals, small-scale sculptures, and personal ornaments. In the Neolithic period, Erlitou culture, and Shang Dynasty bone (bovine scapula and tortoise plastrons, or lower shells) is used for divination: A carefully prepared bone or shell was thinned by drilling series of holes almost through the bone, to which heat was applied to make the bone crack. In some cases from the Late Shang Dynasty, the bones carry inscriptions revealing the date and

nature of the question asked and, occasionally, the outcome of the event. The cowrie shells used as money in the Shang Dynasty and later periods show signs of use. Worked shell imitations of cowries are also known. Ivory and horn are used to craft tableware utensils such as cups and containers as early as the Shang Dynasty; these are sometimes inlaid with turquoise or other stones.

V. Silks and Textiles

Neolithic through Tang: Silk worms are domesticated in China as early as the Neolithic. Silk cloth is preserved as garments and parts thereof, as a covering for furniture, and as painted or embroidered banners. Techniques include flat weave, moiré, damask, gauze, quilting, and embroidery.

VI. Lacquer and Wood

Neolithic through Tang: Lacquer is a transparent sap collected from the lac tree. When dissolved, it may be repeatedly applied to a wood or fabric form. The resulting product is sturdy and light. Lacquer vessels first appear in the Neolithic period, and become highly sophisticated and numerous by the middle Zhou through Han Dynasties. In the Sui and Tang Dynasties the practice is invented of creating a hard, thick surface of lacquer with the application of many thin layers. The resulting object may be carved and or inlaid before it hardens completely. Common colors for lacquer are red and black. Object types include: Vessels such as bowls, dishes, and goblets; military gear such shields and armor; musical instruments such as zithers (*qin*) and drums, related supports for drums and for bell sets; and boxes and baskets with painted or carved lids.

Wooden objects from this era are mainly preserved when painted with lacquer. These include architectural elements, utensils, coffins, musical instruments, and wood sculptures.

VII. Bamboo and Paper

Zhou through Tang: Types include texts on bamboo and wooden slips, and on paper. The slips may be found singly, or in groups numbering into the thousands. Some Buddhist sutras were printed with movable wooden type.

VIII. Glass

Zhou through Tang: Glass types include mostly tablewares, such as cups, plates, saucers.

IX. Painting and Calligraphy

A. Wall Painting

Note that this section includes wall art at least 250 years old. The painted bricks of the Han through Tang tomb walls have already been mentioned. That tradition is partially concurrent with a fresco tradition that runs from the Han through Qing Dynasties. Temples including those in caves or grottos have wall paintings with Buddhist, Confucian, and Daoist themes.

B. Other Painting

Han through Tang: Paintings, dating to as early as the Southern and Northern, are on such media as banners, hand-scrolls, and fans. Subjects are drawn from Buddhism, Confucianism, and Daoism. Other subjects include landscapes and hunting scenes.

Inapplicability of Notice and Delayed Effective Date

This amendment involves a foreign affairs function of the United States and is, therefore, being made without notice or public procedure (5 U.S.C. 553(a)(1)). For the same reason, a delayed effective date is not required under 5 U.S.C. 553(d)(3).

Regulatory Flexibility Act

Because no notice of proposed rulemaking is required, the provisions of the Regulatory Flexibility Act (5 U.S.C. 601 *et seq.*) do not apply.

Executive Order 12866

Because this rule involves a foreign affairs function of the United States, it is not subject to Executive Order 12866.

Signing Authority

This regulation is being issued in accordance with 19 CFR 0.1(a)(1).

List of Subjects in 19 CFR Part 12

Cultural property, Customs duties and inspection, Imports, Prohibited merchandise, Reporting and recordkeeping requirements.

Amendment to CBP Regulations

■ For the reasons set forth above, part 12 of Title 19 of the Code of Federal Regulations (19 CFR part 12), is amended as set forth below:

PART 12—SPECIAL CLASSES OF MERCHANDISE

■ 1. The general authority citation for part 12 and the specific authority citation for § 12.104g continue to read as follows:

Authority: 5 U.S.C. 301; 19 U.S.C. 66, 1202 (General Note 3(i), Harmonized Tariff Schedule of the United States (HTSUS)), 1624;

* * * * *

Sections 12.104 through 12.104i also issued under 19 U.S.C. 2612;

* * * * *

■ 2. In § 12.104g, paragraph (a), the table is amended by adding the People's Republic of China to the list in appropriate alphabetical order as follows:

§ 12.104g Specific items or categories designated by agreements or emergency actions.

(a) * * *

State party	Cultural property	Decision No.
* *	* * * * *	
People's Republic of China	Archaeological materials representing China's cultural heritage from the Paleolithic Period (c. 75,000 B.C.) through the end of the Tang Period (A.D. 907) and monumental sculpture and wall art at least 250 years old.	CBP Dec. 09–03.
* *	* * * * *	

* * * * *

W. Ralph Basham,

Commissioner, U.S. Customs and Border Protection.

Approved: January 12, 2009.

Timothy E. Skud,

Deputy Assistant Secretary of the Treasury.

[FR Doc. E9–848 Filed 1–15–09; 8:45 am]

BILLING CODE 9111–14–P

DEPARTMENT OF HOMELAND SECURITY

Bureau of Customs and Border Protection

DEPARTMENT OF THE TREASURY

19 CFR Parts 12 and 163

[CBP Dec. 09–01; USCBP–2008–0111]

RIN 1505–AC06

Prohibitions and Conditions for Importation of Burmese and Non-Burmese Covered Articles of Jadeite, Rubies, and Articles of Jewelry Containing Jadeite or Rubies

AGENCIES: Customs and Border Protection, Department of Homeland Security; Department of the Treasury.

ACTION: Interim final rule; solicitation of comments.

SUMMARY: This document amends the U.S. Customs and Border Protection (CBP) regulations in title 19 of the Code of Federal Regulations (19 CFR) in order to implement the provisions of the Tom Lantos Block Burmese JADE (Junta's Anti-Democratic Efforts) Act of 2008 (Pub. L. 110–286) (the ''JADE Act'') and Presidential Proclamation 8294 of September 26, 2008, which includes new Additional U.S. Note 4 to Chapter 71 of the Harmonized Tariff Schedule of the United States (''HTSUS''). These amendments are made to implement certain provisions of the JADE Act and the Presidential Proclamation by prohibiting the importation of ''Burmese covered articles'' (jadeite, rubies, and articles of jewelry containing jadeite or rubies, mined or extracted from Burma), and by setting forth conditions for the importation of ''non-Burmese covered articles'' (jadeite, rubies, and articles of jewelry containing jadeite or rubies, mined or extracted from a country other than Burma).

DATES: This interim final rule is effective January 16, 2009. Comments must be received on or before March 17, 2009.

ADDRESSES: You may submit comments, identified by docket number, by one of the following methods:

- *Federal eRulemaking Portal: http://www.regulations.gov.* Follow the instructions for submitting comments via docket number USCBP–2008–0111 .
- *Mail:* Trade and Commercial Regulations Branch, Regulations and Rulings, Office of International Trade, U. S. Customs and Border Protection, 799 9th Street, NW., (Mint Annex), Washington, DC 20229.

Instructions: All submissions received must include the agency name and docket number for this rulemaking. All comments received will be posted without change to *http://www.regulations.gov*, including any personal information provided. For detailed instructions on submitting comments and additional information on the rulemaking process, see the ''Public Participation'' heading of the **SUPPLEMENTARY INFORMATION** section of this document.

Docket: For access to the docket to read background documents or comments received, go to *http://www.regulations.gov.* Submitted comments may be inspected during regular business days between the hours of 9 a.m. and 4:30 p.m. at the Trade and Commercial Regulations Branch, Regulations and Rulings, Office of International Trade, U.S. Customs and Border Protection, 799 9th Street, NW., 5th Floor, Washington, DC. Arrangements to inspect submitted comments should be made in advance by calling Mr. Joseph Clark at (202) 325–0118.

FOR FURTHER INFORMATION CONTACT: Cathy Sauceda, Director, Import Safety and Interagency Requirements Division, Office of International Trade (202) 863–6556, or Brenda Brockman Smith, Executive Director, Trade Policy and Programs, Office of International Trade (202) 863–6406.

SUPPLEMENTARY INFORMATION:

Public Participation

Interested persons are invited to participate in this rulemaking by submitting written data, views, or arguments on all aspects of the interim final rule. CBP also invites comments that relate to the economic, environmental, or federalism effects that might result from this interim final rule. Comments that will provide the most assistance to CBP will reference a specific portion of the interim final rule, explain the reason for any recommended change, and include data, information, or authority that support such recommended change. *See* **ADDRESSES** above for information on how to submit comments.

Background

On July 29, 2008, the President signed into law the Tom Lantos Block Burmese JADE (Junta's Anti-Democratic Efforts) Act of 2008 (Pub. L. 110–286) (the ''JADE Act''). Section 6 of the JADE Act amends the Burmese Freedom and Democracy Act of 2003 (Pub. L. 108–61) (as so amended, the ''BFDA'') by adding a new section 3A that prohibits the importation of jadeite and rubies mined or extracted from Burma, and articles of jewelry containing jadeite or rubies mined or extracted from Burma, and by regulating the importation of jadeite and rubies mined or extracted from a country other than Burma, and articles of jewelry containing jadeite or rubies mined or extracted from a country other than Burma. Presidential Proclamation 8294 of September 26, 2008 implements the prohibitions and conditions of the JADE Act. (*See* Annex of Presidential Proclamation 8294 for Additional U.S. Note 4 to Chapter 71, Harmonized Tariff Schedule of the United States (''HTSUS'')).

Burmese Covered Articles

Section 3A(b)(1) of the BFDA, as implemented by Presidential Proclamation 8294, provides that ''Burmese covered articles'' are prohibited from importation into the United States. Burmese covered articles are defined in section 3A(a)(2) of the BFDA as jadeite or rubies mined or extracted from Burma, or articles of jewelry containing jadeite or rubies mined or extracted from Burma. Section 3A(a)(4) of the BFDA defines ''jadeite'' as any jadeite classifiable under heading 7103 of the HTSUS; ''rubies'' as rubies classifiable under heading 7103 of the HTSUS; and ''articles of jewelry containing jadeite or rubies'' as any article of jewelry classifiable under heading 7113 of the HTSUS that contains jadeite or rubies, or any article of jadeite or rubies classifiable under heading 7116 of the HTSUS. The prohibition on the importation of the Burmese covered articles will also be set forth in the regulations of the Office of Foreign Assets Control (OFAC) at 31 CFR Part 537.

Non-Burmese Covered Articles

Sections 3A(c)(1) and (2) of the BFDA set forth the conditions for importation into the United States of ''non-Burmese covered articles,'' which are defined in section 3A(a)(3) of the BFDA as jadeite or rubies mined or extracted from a country other than Burma, or articles of jewelry containing jadeite or rubies mined or extracted from a country other than Burma.

Presidential Proclamation 8294 requires that as a condition for the importation into the United States of any non-Burmese covered article, the importer and exporter of such article must meet the conditions set forth in section 3A(c)(1) of the BFDA. The Proclamation also modified the HTSUS by including Additional U.S. Note 4 to Chapter 71, HTSUS.

Certifications

Additional U.S. Note 4(a), Chapter 71, HTSUS, provides that if an importer chooses to enter any good (or withdraws such good from warehouse for consumption) under heading 7103, 7113, or 7116, HTSUS, the presentation of this entry at the time of importation shall be deemed to be a certification by the importer that any jadeite or rubies contained in such good were not mined or extracted from Burma. As such, the entry of any such article under one of the three specified headings is considered to be the ''importer's certification.''

Under section 3A(c)(1) of the BFDA, another condition for importation is that the exporter of the non-Burmese covered article has implemented measures that have substantially the same effect and achieve the same goals as the measures described in section 3A(c)(2)(B)(i) through (iv) or their functional equivalent to prevent the trade in Burmese covered articles. To achieve this requirement, CBP is amending the regulations to require that, at the time of importation into the United States, the importer have in his possession a written certification from the exporter (''exporter's certification'') certifying that the jadeite or rubies were not mined or extracted from Burma, with verifiable evidence from the exporter that tracks the jadeite or rubies as follows: With respect to exportation from the country of jadeite or rubies in rough form, from mine to exportation; with respect to exportation from the country of finished jadeite or polished rubies, from mine to the place of final finishing; and with respect to exportation from the country of articles of jewelry containing jadeite or rubies, from mine to the place of final finishing of the article of jewelry.

Exceptions

Sections 3A(d)(1) and (2) of the BFDA set forth the two instances in which the prohibitions and conditions of the JADE Act do not apply. These exceptions are as follows: (1) Jadeite, rubies, and articles of jewelry containing jadeite or rubies that are reimported into the United States after having been previously exported from the United States, including those that accompanied an individual outside the United States for personal use, if they are reimported into the United States by the same person who exported them, without having been advanced in value or improved in condition by any process or other means while outside the United States, and (2) jadeite or rubies mined or extracted from a country other than Burma, and articles of jewelry containing jadeite or rubies mined or extracted from a country other than Burma, that are imported by or on behalf of an individual for personal use and accompanying an individual upon entry into the United States.

Recordkeeping Requirements

Under section 3A(c)(1) of the BFDA, a specific condition for importation of non-Burmese covered articles is that the importer of non-Burmese covered articles maintain for a period of not less than 5 years from the date of entry of the non-Burmese covered article a full record of, in the form of reports or otherwise, complete information relating to any act or transaction related to the purchase, manufacture, or shipment of the non-Burmese covered article. The importer is further required to produce such information to the relevant United States authorities upon request. CBP, to comply with the statute, is requiring the importer to keep in its possession a certification from the exporter certifying that the jadeite or rubies were not mined or extracted from Burma, with verifiable evidence from the exporter that tracks the sourcing from mine to either exportation or place of final finishing. Because the importer of record must have in his possession at the time of entry a certification from the exporter (''exporter's certification'') and any underlying records supporting its certified entry of articles under heading 7103, 7113 or 7116, HTSUS, that any such articles were not mined or extracted from Burma, CBP is amending its (a)(1)(A) list (found in the Appendix to 19 CFR part 163). In this rulemaking, CBP is adding this new recordkeeping requirement in Section IV of the (a)(1)(A) list in the Appendix to 19 CFR part 163.

Explanation of Amendments

These amendments implement certain provisions of the JADE Act and the Presidential Proclamation with regard to the prohibition on importations of Burmese covered articles, and incorporate into the regulations the conditions for importation of non-Burmese covered articles. CBP is adding a new § 12.151 to part 12 of title 19 of the Code of Federal Regulations (19 CFR) to reflect the new conditions as described above. CBP is also amending the Interim (a)(1)(A) list in the Appendix to part 163 of title 19 CFR to add to the list of documents that importers must retain for a period of 5 years the ''exporter's certification'' as well as other supporting documentation in Section IV of the Appendix.

Inapplicability of Prior Public Notice and Delayed Effective Date

This document incorporates into the regulations a provision setting forth the conditions necessary for importation of non-Burmese covered articles. This document further amends the Appendix to part 163 for the list of records required for the entry of merchandise to implement the statutory mandate contained in the JADE Act and Presidential Proclamation 8294 of September 26, 2008 and inform the public of the conditions necessary to comply with the statutory requirements. Because this regulation merely implements statutory requirements, CBP has determined, pursuant to the provisions of 5 U.S.C. 553(b)(B), that prior public notice and comment procedures on this regulation are impracticable and contrary to the public interest and that there is good cause for this rule to become effective immediately upon publication as the JADE Act is already in effect. For these reasons, pursuant to the provisions of 5 U.S.C. 553(d)(3), CBP finds that there is good cause for dispensing with a delayed effective date.

Executive Order 12866 and Regulatory Flexibility Act

This document does not meet the criteria for a ''significant regulatory action'' as specified in Executive Order 12866 of September 30, 1993 (58 FR 51735, October 1993). In addition, because a notice of proposed rulemaking is not required under 5 U.S.C. 553(b) for the reasons described above, CBP notes that the provisions of the Regulatory Flexibility Act, as amended (5 U.S.C. 601 *et seq.*), do not apply to this rulemaking. Accordingly, CBP also notes that this rule is not subject to the regulatory analysis requirements or other requirements of 5 U.S.C. 603 and 604.

Paperwork Reduction Act

The collections of information in this document are contained in § 12.151(d) (19 CFR 12.151(d)). This information is used by CBP to fulfill its information collection obligations under section 3A(c)(1) of the BFDA, as amended, and Additional U.S. Note 4, Chapter 71, HTSUS, which requires that when an

importer of non-Burmese covered articles certifies on the entry summary form, CBP Form 7501, that the articles entered under heading 7103, 7113 or 7116, HTSUS were not mined or extracted from Burma, the importer must have in his possession a written certification from the exporter that such articles were not mined or extracted from Burma and other documentation to support such certification at the time of entry under § 12.151(d). The likely respondents are business organizations including importers and brokers. An agency may not conduct or sponsor, and a person is not required to respond to, a collection of information unless it displays a valid control number assigned by OMB. This collection of information falls under the approved collection OMB Control No. 1651–0133.

Estimated annual reporting and/or recordkeeping burden: 74,005 hours.

Number of responses per respondent and/or recordkeeper: 20.

Estimated number of respondents and/or recordkeepers: 22,197.

Estimated annual total responses: 443,940.

Estimated time per response: 10 minutes (.1667 hours).

Comments on the collection of information should be sent to the Office of Management and Budget, *Attention:* Desk Officer for the Department of the Treasury, Office of Information and Regulatory Affairs, Washington, DC 20503. A copy should also be sent to the Trade and Commercial Regulations Branch, Regulations and Rulings, Office of International Trade, Customs and Border Protection, 799 9th Street, NW., (Mint Annex), Washington, DC 20229.

Signing Authority

This document is being issued in accordance with section 0.1(a)(1) of the CBP regulations (19 CFR 0.1(a)(1)) pertaining to the authority of the Secretary of the Treasury (or his/her delegate) to approve regulations related to certain customs revenue functions.

List of Subjects

19 CFR Part 12

Customs duties and inspection, Economic sanctions, Entry of merchandise, Foreign assets control, Imports, Licensing, Prohibited Merchandise, Reporting and recordkeeping requirements, Restricted merchandise, Sanctions.

19 CFR Part 163

Administrative practice and procedure, Customs duties and inspection, Exports, Imports, Penalties, Reporting and recordkeeping requirements.

Amendments to the Regulations

■ For the reasons set forth above, parts 12 and 163 of title 19 of the Code of Federal Regulations (19 CFR parts 12 and 163) are amended as set forth below:

PART 12—SPECIAL CLASSES OF MERCHANDISE

■ 1. The general authority citation for part 12, CBP regulations, continues to read, and a new specific authority citation for § 12.151 is added to read, as follows:

Authority: 5 U.S.C. 301; 19 U.S.C. 66, 1202 (General Note 3(i), Harmonized Tariff Schedule of the United States (HTSUS)), 1624;

* * * * *

Section 12.151 also issued under The Burmese Freedom and Democracy Act of 2003 (Pub. L. 108–61) (the ''BFDA''), as amended by the Tom Lantos Block Burmese JADE (Junta's Anti-Democratic Efforts) Act of 2008 (Pub. L. 110–286) (the ''JADE Act''); Presidential Proclamation 8294, signed on September 26, 2008; Additional U.S. Note 4 to Chapter 71, HTSUS.

* * * * *

■ 2. In part 12, a new § 12.151 is added to read as follows:

§ 12.151 Prohibitions and conditions on importations of jadeite, rubies, and articles of jewelry containing jadeite or rubies.

(a) *General.* The importation into the United States of jadeite, rubies, and articles of jewelry containing jadeite or rubies is prohibited or conditioned as described in this section pursuant to the Tom Lantos Block Burmese JADE Act of 2008 (Pub. L. 110–286). For purposes of this section, the following definitions apply:

(1) *Jadeite.* ''Jadeite'' means any jadeite classifiable under heading 7103 of the Harmonized Tariff Schedule of the United States (HTSUS);

(2) *Rubies.* ''Rubies'' means any rubies classifiable under heading 7103 of the HTSUS;

(3) *Articles of jewelry containing jadeite or rubies.* ''Articles of jewelry containing jadeite or rubies'' means any article of jewelry classifiable under heading 7113 of the HTSUS that contains jadeite or rubies, or any article of jadeite or rubies classifiable under heading 7116 of the HTSUS; and

(4) *United States.* ''United States'' means the 50 states, the District of Columbia, and any commonwealth, territory, or possession of the United States.

(b) *Prohibited Articles.* The following articles are prohibited from importation into the United States (*see* 31 CFR Part 537):

(1) Jadeite mined or extracted from Burma;

(2) Rubies mined or extracted from Burma; and

(3) Articles of jewelry containing jadeite or rubies mined or extracted from Burma.

(c) *Regulated Articles.* Jadeite, rubies, or articles of jewelry containing jadeite or rubies may not be imported into the United States unless the importer certifies (*see* paragraph (d) of this section) that those jadeite or rubies were mined or extracted from a country other than Burma and possesses the documents described in paragraph (e) of this section.

(d) *Certification of importer.* Pursuant to Additional U.S. Note 4(a), Chapter 71, HTSUS, if an importer enters any good (or withdraws any good from warehouse for consumption) under heading 7103, 7113, or 7116 of the HTSUS, the presentation of the entry serves as a certification by the importer that any jadeite or rubies contained in such good were not mined or extracted from Burma.

(e) *Certification of exporter.* If an importer enters (or withdraws from warehouse for consumption) jadeite, rubies, or jewelry containing jadeite or rubies:

(1) The importer must have in his possession a certification from the exporter (exporter certification) certifying that the jadeite or rubies were not mined or extracted from Burma, with verifiable evidence from the exporter that tracks the jadeite or rubies: In rough form, from mine to exportation; and for finished jadeite, polished rubies, and articles of jewelry containing jadeite or rubies, to the place of final finishing; and

(2) The importer must maintain, for a period of not less than 5 years from the date of entry of the good, a full record of, in the form of reports or otherwise, complete information relating to any act or transaction related to the purchase, manufacture, or shipment of the good.

(f) *Requirement to provide information.* An importer who enters any good (or withdraws any good from warehouse for consumption) under heading 7103, 7113, or 7116 of the HTSUS must provide all documentation to support the certifications described in paragraphs (d) and (e) of this section to CBP upon request or be subject to recordkeeping penalties under part 163 of the chapter.

(g) *Inapplicability.* This section does not apply to the following articles:

(1) Jadeite, rubies, and articles of jewelry containing jadeite or rubies that are reimported into the United States after having been previously exported

from the United States, including those that accompanied an individual outside the United States for personal use, if they are reimported into the United States by the same person who exported them, without having been advanced in value or improved in condition by any process or other means while outside the United States; and

(2) Jadeite or rubies mined or extracted from a country other than Burma, and articles of jewelry containing jadeite or rubies mined or extracted from a country other than Burma that are imported by or on behalf of an individual for personal use and accompanying an individual upon entry into the United States.

PART 163—RECORDKEEPING

■ 3. The general authority citation for Part 163, CBP regulations, continues to read as follows:

Authority: 5 U.S.C. 301; 19 U.S.C. 66, 1484, 1508, 1509, 1510, 1624.

■ 4. The Appendix to Part 163 is amended by adding a new listing under section IV in numerical order to read as follows:

Appendix to Part 163—Interim (a)(1)(A) List.

* * * * *

IV. * * *

§ 12.151 Documentation supporting importer's certification on jadeite, rubies, or articles of jewelry containing jadeite or rubies, including an exporter's certification.

* * * * *

Jayson P. Ahern,

Acting Commissioner, U.S. Customs and Border Protection.

Approved: January 12, 2009

Timothy E. Skud,

Deputy Assistant Secretary of the Treasury.

[FR Doc. E9–786 Filed 1–15–09; 8:45 am]

BILLING CODE 9111–14–P

INTERNATIONAL TRADE COMMISSION

19 CFR Part 207

Revised Procedures and Requests for Information During Adequacy Phase of Five-Year Reviews

AGENCY: United States International Trade Commission.

ACTION: Final rulemaking.

SUMMARY: The United States International Trade Commission (''the Commission'') amends its Rules of Practice and Procedure to require that responses to notices of institution of five-year reviews be filed within 30 days of publication of the notice, as opposed to the 50-day response period specified in its current rules. It also provides notice of its decision, which does not require a change in its rules, to seek additional information from interested parties at the institution of five-year reviews, and to seek information from purchasers during the adequacy phase of five-year reviews in certain circumstances.

DATES: *Effective Date:* This regulation is effective February 17, 2009.

Applicability Date: This regulation and the other changes to Commission procedures described in this notice will be applicable to five-year reviews instituted on or after March 1, 2009.

FOR FURTHER INFORMATION CONTACT: Marc A. Bernstein, Office of General Counsel, U.S. International Trade Commission, telephone 202–205–3087, or John Ascienzo, Office of Investigations, U.S. International Trade Commission, telephone 202–205–3175. Hearing-impaired individuals can obtain information on this matter by contacting the Commission's TDD terminal at 202–205–1810. General information concerning the Commission may also be obtained by visiting its Web site at *http://www.usitc.gov*.

SUPPLEMENTARY INFORMATION: On July 17, 2008, the Commission published a notice of proposed rulemaking (NOPR) in the **Federal Register**. 73 FR 40992 (July 17, 2008). In that notice the Commission proposed two sets of changes to the procedures it uses during the adequacy phase of five-year reviews that it conducts pursuant to 19 U.S.C. 1675(c). First, the Commission proposed modifying the information it requests interested parties furnish in their responses to the notice of institution it publishes pursuant to section 207.60(d) of the Commission's Rules of Practice and Procedure, 19 CFR 207.60(d), and proposed issuing short questionnaires to purchasers in some circumstances. This set of proposals did not require any amendment to the Commission's regulations. The second proposal sought to amend section 207.61(a) of the Commission's Rules of Practice and Procedure to require that responses to the notice of institution be filed within 30 days after its publication.

Although the Commission considers these rules to be procedural rules that are excepted from the notice and comment requirements of 5 U.S.C. 553(b)(3)(A), the Commission invited the public to comment on the proposed rule amendment and the other proposed changes to its procedures within 60 days of publication of the NOPR in the **Federal Register**. The Commission received substantive comments from the following: (1) The law firm of Wiley Rein on behalf of the Steel Manufacturers Ass'n (SMA); (2) the law firm of Skadden, Arps, Slate, Meagher & Flom (Skadden); (3) the law firm of Kelley Drye & Warren (Kelley); and (4) the law firm of Stewart and Stewart (Stewart).

In adopting these changes to its rules and procedures, the Commission has fully considered the concerns expressed in the comments with respect to the potential burden on parties to reviews and the usefulness of the additional information sought by the Commission. These comments, and the Commission's responses thereto, are discussed comprehensively below. In light of the comments, the Commission intends to review its new information requests and changes to its procedures once it has had sufficient experience with them. In particular, the Commission intends to examine the changes' utility and relevance in attaining the desired objectives, as well as the rate of response by purchasers to the adequacy phase questionnaires.

As required by the Regulatory Flexibility Act, the Commission certifies that the amendment to its regulation will not have a significant impact on small business entities.

Changes in Commission Data Collection

The Commission has decided to adopt the changes in data collection proposed in the NOPR. Accordingly, each notice of institution the Commission issues will contain the additional information requests indicated in Appendix A to the NOPR, and in those reviews in which the Commission does not receive responses to the notice of institution from both domestic interested parties and respondent interested parties, the Commission will transmit brief questionnaires to purchasers, in the format indicated in Appendix B to the NOPR, shortly after it receives responses to the notice of institution. These changes will become effective for reviews instituted on or after March 1, 2009.

The commenters opposed both of the Commission's data collection proposals. With respect to the proposal to seek additional information in the notice of institution, commenters questioned the appropriateness of the Commission's stated objective of obtaining a more complete record to better enable it to decide whether to expedite a review. Skadden contended that the Commission should expedite reviews whenever responses from an interested party group are inadequate and that

Congress never intended the Commission to take considerations such as conditions of competition into account in deciding whether to expedite a review. Kelley expressed a similar view, maintaining that when parties have deliberately chosen not to participate in a review, it is a waste of resources for the Commission and other parties to undertake the costs of a full review. SMA asserted that the sole purpose of information requests in the adequacy phase is to ascertain sufficient commitment to participation in a five-year review.The Commission disagrees with the premise underlying these comments that an inadequate interested party group response should always result in an expedited determination. Neither the statute nor Commission practice dictates such a result. The statute states that ''[i]f interested parties provide inadequate responses to the notice of institution * * * the Commission * * * *may* issue, without further investigation, a final determination based on the facts available.'' 19 U.S.C. 1675(c)(3)(B) (emphasis added). The statutory language indicates that the Commission has the discretion whether to conduct an expedited review when it receives an inadequate response from an interested party group. While the Statement of Administrative Action (SAA) for the Uruguay Round Agreements Act states that the purpose of the expedited review procedure is ''to eliminate needless reviews,'' it does not suggest that all reviews in which an interested party group response may be inadequate are necessarily ''needless.'' H.R. Rep. 103–316, vol. I at 880 (1994). Indeed, in its 1998 rulemaking notice, the Commission expressly indicated that it ''has the discretion to conduct a full review even when interested party responses are inadequate.'' 63 FR 30599, 30604 (June 5, 1998). The circumstances the Commission identified as justifying such an exercise of discretion included mixed responses in grouped reviews (*i.e.*, adequate respondent interested party group responses for some subject countries but not others) and the existence of significant domestic like product issues. *Id.* at 30604. In recent years, the Commission has taken the position that changes in conditions of competition may also warrant conducting a full review even when a respondent interested party group response is inadequate. *E.g., Certain Welded Stainless Steel Pipe from Korea and Taiwan*, Inv. Nos. 731–TA–540–541 (Second Review), USITC Pub. 3877 at 3 (Aug. 2006).

Commenters questioned whether the additional data requests would accomplish the Commission's objective of improving the information available to it in expedited reviews. Three commenters contended that the additional information the Commission seeks will be too limited in temporal scope, because it will concern only one calendar year, to be particularly probative. They asserted that a single year's worth of data may be misleading.

The Commission acknowledges the limitations of a data set that contains data for only one year. Nevertheless, the other data the Commission currently seeks in the notice of institution similarly encompass only a single calendar year. The Commission believes that obtaining additional data concerning capacity, financial information concerning production of the domestic like product, and prices for the domestic like product and subject merchandise in the U.S. and other world markets will improve the quality of the record in the reviews it chooses to expedite. Indeed, none of the commenters directly challenged this proposition. Although commenters expressed concern about the burden of providing the additional information the Commission proposes to collect, the Commission believes that burden will be reasonable and will certainly be less onerous than that involved in supplying data for several years.

Commenters further questioned whether any information purchasers may provide in the proposed ''mini-questionnaires'' will be useful to the Commission. Skadden and SMA contended that because purchasers cannot provide information pertinent to whether interested parties are willing to participate in a review and provide requested information to the Commission, the information they would supply would not be pertinent. Kelley and SMA expressed the concern that purchasers' responses will be skewed by a desire to reduce the price of their inputs. Skadden and Stewart questioned whether the limited number of purchasers likely to receive the mini-questionnaires will be sufficiently representative to provide reliable information. Stewart also observed that the mini-questionnaires may prove burdensome to purchasers, who will be required to furnish the same information a second time should the Commission conduct a full investigation.

The commenters' central objection to this proposal is premised on the view that the only purpose of the adequacy phase of a five-year review is to ascertain whether there are sufficient responses to warrant conducting a full review, and if a group response is inadequate, the Commission must expedite the review. The Commission has previously disagreed with this premise and has reaffirmed the relevance of examining whether there have been significant changes in conditions of competition for the purpose of determining whether a full review is warranted, notwithstanding an inadequate group interested party response. The Commission acknowledges that the information the purchasers will provide in response to their mini-questionnaires will be limited in scope and may reflect the perspective of the submitter. Nevertheless, the Commission currently believes this limited information will provide a useful supplement to the information provided in the responses to the notices of institution as to how the current conditions of competition for the domestic like product and the subject merchandise may differ from those that the Commission examined in prior determinations. The Commission further notes that the responses to the notice of institution also reflect the perspective of the submitter. In addition, no purchaser interests submitted any comments objecting to the proposal. Nevertheless, as previously discussed, the Commission will further consider both the response rate to the mini-questionnaires and the utility of the information they provide once it has obtained experience issuing such questionnaires and analyzing responses to them.

Change in Commission Rule 207.61(a)

In the NOPR, the Commission proposed amending Commission Rule 207.61(a) to require that responses to the notice of institution be submitted within 30 days after publication of the notice, as opposed to the current 50 days. The Commission stated that this change would permit the Commission staff the additional time it would need to engage in the additional information collection and analysis that was contemplated under the proposed new data collection requests. Because the Commission has implemented the proposed new data collection requests, it has also determined to issue the proposed change to Commission Rule 207.61(a) in final form. The amended regulation will apply to all reviews instituted on or after March 1, 2009.

Each of the commenters opposed the proposed change to Commission Rule 207.61(a) on the grounds that a 30-day response period was insufficient. Skadden and Stewart contended that parties need the full 50 days currently

provided in the rule to file their substantive responses to the Commission because they will be devoting the first 30 days of that period preparing responses to the Department of Commerce. SMA stated that current requirements for adequacy comments are arduous and that increasing the amount of information that must be provided while reducing the amount of time available to prepare a submission is problematic. Kelley asserted that domestic producers will put more detailed information in a notice of review if they are aware that no respondent interested parties will participate. Notices of appearance need not be filed until 21 days after the notice of institution, and Kelley asserted that nine days would be insufficient time for a domestic producer to compile this more detailed information.

The commenters' objections proceed largely from the premise that a domestic producer will not begin to prepare its responses to either the Commerce notice of initiation or the Commission notice of institution until these notices are published in the **Federal Register**. The Commission does not agree with this premise. Interested parties are in a position to begin compiling information needed for a five-year review well before the publication of notices in the **Federal Register** beginning the reviews. The parties typically know the date that Commerce and the Commission will publish their **Federal Register** notices many months in advance. The Commission requests standardized information in interested parties' responses to notices of institution; the information requests are generally known prior to publication of the **Federal Register** notice. Similarly, the information that Commerce requires to be submitted in a notice of intent to participate in a sunset review is specified by regulation, and thus will be known well before initiation of the review. Kelley's assertion that responses to the notice of institution contain more detailed information in uncontested reviews than in contested reviews is not consistent with the Commission's experience.

List of Subjects in 9 CFR Part 207

Administrative practice and procedure, investigations.

■ For the reasons stated in the preamble, the Commission amends 19 CFR part 207 as follows:

PART 207—INVESTIGATIONS OF WHETHER INJURY TO DOMESTIC INDUSTRIES RESULTS FROM IMPORTS SOLD AT LESS THAN FAIR VALUE OR FROM SUBSIDIZED EXPORTS TO THE UNITED STATES

■ 1. The authority citation for part 207 continues to read as follows:

Authority: 19 U.S.C. 1336, 1671–1677n, 2482, 3513.

■ 2. Amend § 207.61 by revising paragraph (a) as follows:

§ 207.61 Responses to notice of institution.

(a) *When Information Must Be Filed.* Responses to the notice of institution shall be submitted to the Commission no later than 30 days after its publication in the **Federal Register**.

* * * * *

Issued: January 12, 2009.

By order of the Commission.

Marilyn R. Abbott,

Secretary to the Commission.

[FR Doc. E9–860 Filed 1–15–09; 8:45 am]

BILLING CODE 7020–02–P

DEPARTMENT OF HEALTH AND HUMAN SERVICES

Food and Drug Administration

21 CFR Parts 314 and 320

[Docket No. FDA–2003–N–0209] (Formerly Docket No. 2003N–0341)

RIN 0910–AC23

Requirements for Submission of Bioequivalence Data; Final Rule

AGENCY: Food and Drug Administration, HHS.

ACTION: Final rule.

SUMMARY: The Food and Drug Administration (FDA) is amending its regulations on the submission of bioequivalence data to require an abbreviated new drug application (ANDA) applicant to submit data from all bioequivalence (BE) studies the applicant conducts on a drug product formulation submitted for approval. In the past, ANDA applicants have submitted BE studies demonstrating that a generic product meets bioequivalence criteria in order for FDA to approve the ANDA, but have not typically submitted additional BE studies conducted on the same drug product formulation, such as studies that do not show that the product meets these criteria. FDA is amending the regulation because we now believe that data from additional BE studies may be important in our determination of whether the proposed formulation is bioequivalent to the reference listed drug (RLD), and are relevant to our evaluation of ANDAs in general. In addition, such data will increase our understanding of how changes in components, composition, and methods of manufacture may affect product formulation performance.

DATES: The rule is effective July 15, 2009.

FOR FURTHER INFORMATION CONTACT: Aida L. Sanchez, Center for Drug Evaluation and Research (HFD–650), Food and Drug Administration, 7520 Standish Pl., Rockville, MD 20855, 240–276–8782.

SUPPLEMENTARY INFORMATION:

I. Background

In the **Federal Register** of October 29, 2003 (68 FR 61640), FDA proposed to amend its regulations in parts 314 and 320 (21 CFR parts 314 and 320) to require an ANDA applicant to submit data from all BE studies that the applicant conducts on a drug product formulation submitted for approval. Section 505(j)(2)(A)(iv) of the Federal Food, Drug, and Cosmetic Act (the act) (21 U.S.C. 355(j)(2)(A)(iv)) requires that ANDA applicants submit, among other things, information showing that the applicant's drug is bioequivalent to a drug that has previously been approved by FDA. Under the regulations at § 314.3(b), the approved drug product identified by FDA as the drug product on which an ANDA applicant relies for approval is the RLD. The requirement that an ANDA applicant submit information that shows the proposed product is bioequivalent to the RLD is described in FDA's regulations at § 314.94(a)(7). Section 320.24 sets forth the types of evidence acceptable to establish BE. The most common BE studies are those performed on solid oral dosage forms of drugs that are absorbed into the systemic circulation. BE data provide an estimate of the rate and extent of drug absorption for a test and reference product. These data are examined, using statistical procedures, to determine whether the test product meets BE limits.

A BE study may fail to show that a test product meets BE limits because the test product has significantly higher or lower relative bioavailability (i.e., measures of rate and extent of absorption compared to the reference product). In some cases, BE will not be demonstrated because there are inadequate numbers of subjects in the study relative to the magnitude of intrasubject variability, and not because

of either significantly high or low relative bioavailability of the product. Where the relative bioavailability of a product is too low, the concern is that not enough of the active ingredient is reaching the site of action, and therefore the product may not be as therapeutically effective as the RLD. Where the relative bioavailability of a test product is too high, the concern with the product is not its therapeutic efficacy, but rather its safety relative to the RLD. When the variability of the test product is high, the concern relates to both safety and efficacy. The variability may suggest that the test product does not perform as consistently as the reference product, and the test product may be too variable to be clinically useful.

The act and FDA regulations require that an ANDA applicant submit information demonstrating BE of a proposed drug to the RLD, but do not specify whether all BE studies must be submitted. It has been the practice of ANDA applicants to submit evidence of bioequivalence consisting of studies demonstrating that the rate and extent of absorption of the test product meet BE limits. Thus, ANDA applicants that have conducted multiple studies on a final formulation, producing both passing and nonpassing results, have generally not submitted the results of the nonpassing study or studies to FDA. Similarly, ANDA applicants that have conducted multiple studies on a final formulation, producing more than one passing result, have generally not submitted the results of all of the passing studies to FDA. As a result, FDA infrequently sees data from such additional studies and is generally unaware of the existence of such studies. In rare instances, ANDA applicants have submitted additional BE studies, or the agency has learned about such studies through other means.

II. Summary of the 2003 Proposed Rule

FDA determined that the submission of all bioequivalence studies, both passing and nonpassing, is necessary for the purposes of evaluating a drug product submitted for approval under an ANDA. Accordingly, the agency proposed to amend its regulations in parts 314 and 320. Specifically, the agency proposed to amend:

- the ANDA content requirements (§ 314.94(a)(7)(i))
- the ANDA amendment requirements (§ 314.96(a)(1)), and
- the requirements for submission of in vivo bioavailability and bioequivalence data (§ 320.21(b)(1)).

The agency did not propose to amend the text of § 320.21(c). However, because § 320.21(c) references the requirements of § 320.21(b)(1), the proposed changes to § 320.21(b)(1) would also modify the requirements of § 320.21(c). In addition, FDA explained how it intended to interpret two of its current regulations to be consistent with the proposal. Specifically, FDA explained that it intended to interpret the regulation applicable to an ANDA submitted under an approved suitability petition (§ 314.94(a)(7)(ii)) and the postmarketing reporting regulation (§ 314.81(b)(2)(vi)) to require the submission of all BE studies, both passing and nonpassing.

The agency did not propose to amend the section heading of § 320.21 (''Requirements for submission of in vivo bioavailability and bioequivalence data''), but after reviewing the public comments, the agency believes that the section heading of § 320.21 may cause confusion. As explained in the proposed rule, FDA is requiring the submission of all bioequivalence studies conducted on a drug product formulation submitted for approval. This requirement includes both in vivo and in vitro studies that are conducted for the purpose of establishing bioequivalence. Therefore, FDA is changing the section heading of § 320.21 to omit the reference to in vivo studies, to more clearly reflect the fact that both in vivo and in vitro studies must be submitted.

III. Description of the Final Rule

We are revising our regulations to require applicants to submit data on all BE studies, including studies that do not meet passing bioequivalence criteria, which are performed on a drug product formulation submitted for approval under an ANDA, or in an amendment or supplement to an ANDA that contains BE studies. Applicants will also be required to submit data in an annual report on all postmarketing BE studies conducted or otherwise obtained on the approved drug product formulation during the annual reporting period.

The provisions of the proposed rule stated that BE studies on the ''same drug product formulation'' must be submitted. The proposed rule did not specifically define the term ''same drug product formulation.'' However, in the preamble to the proposed rule, the agency stated that ''FDA intends that the terminology 'same drug product formulation' will include formulations that have minor differences in composition or method of manufacture from the formulation submitted for approval, but are similar enough to be relevant to the agency's determination of bioequivalence. For example, where an applicant makes formulation or manufacturing changes of the type that qualify as level 1 or level 2 changes in FDA's current guidances on scale up and postapproval changes (SUPAC) listed below, the agency will consider the original and modified products to be similar enough to constitute the same drug product formulation for the purposes of the proposed rule'' (68 FR 61640 at 61643). The proposed rule then listed six SUPAC guidances.

FDA received a significant number of comments indicating that using the SUPAC guidances as a way of explaining which BE studies must be submitted to the agency did not provide sufficient clarity. For example, one comment on the proposed rule asked if the rule will require the submission of pilot studies, including pilot pharmacokinetic studies in animals, or in vitro studies. Another comment asked whether it will be necessary to submit prior studies—such as a pharmacokinetic study on the metabolite only, a pharmacokinetic study in urine, a pharmacodynamic study, a clinical endpoint BE study or other clinical study, or a sensitization or irritation study for transdermal patches—that are not directly relevant to the assessment of BE by the current criteria.

The final rule continues to use the term ''same drug product formulation.'' However, to eliminate the confusion caused by reference to the SUPAC guidances, we have added a definition of the term ''same drug product formulation.'' As set forth in § 320.1(g) of this final rule, the term ''same drug product formulation'' means the formulation of the drug product submitted for approval and any formulations that have minor differences in composition or method of manufacture from the formulation submitted for approval, but are similar enough to be relevant to the agency's determination of bioequivalence (§ 320.1(g)). This definition is consistent with FDA's intended meaning for the term ''same drug product formulation,'' as described in the proposed rule (68 FR 61640 at 61643), and eliminates the need to refer to the SUPAC guidances as discussed further in this document.

In addition, as stated in the preamble to the proposed rule, FDA intends to make available shortly a draft guidance intended to help affected entities better understand which BE studies should be submitted, as well as the format FDA recommends for submission.

FDA is revising §§ 314.94(a)(7)(i), 314.96(a)(1), 320.1(g), 320.21 (section heading), and 320.21(b)(1), as well as modifying § 320.21(c) (which references the requirements of § 320.21(b)(1)) to

require that an applicant submitting BE studies in an ANDA, ANDA amendment, or ANDA supplement submit: (1) Full reports of BE studies upon which the applicant relies for approval and (2) either full or summary reports of all other BE studies conducted on the same drug product formulation. In addition to amending these provisions, FDA is also clarifying its interpretation of two regulations, §§ 314.94(a)(7)(ii) and 314.81(b)(2)(vi) as follows:

As currently written, § 314.94(a)(7)(ii) requires an applicant submitting an ANDA under a petition approved under § 314.93 to submit the results of any bioavailability or bioequivalence testing required by the agency to show that the active ingredients of the proposed drug product are of the same pharmacological or therapeutic class as those in the RLD, and that the proposed drug product can be expected to have the same therapeutic effect as the RLD. Consistent with the regulatory changes described above, FDA intends to interpret § 314.94(a)(7)(ii) to require the submission of results from all bioavailability and BE studies, passing and nonpassing, conducted on the same drug product formulation. An applicant submitting an ANDA under a petition approved under § 314.93 will now be required to submit complete reports of the bioavailability or BE studies upon which the applicant relies for approval, and a complete or summary report for all other bioavailability or BE studies on the same drug product formulation.

As currently written, § 314.81(b)(2)(vi) requires an ANDA applicant to submit, in an annual report, the results of ''biopharmaceutic, pharmacokinetic, and clinical pharmacology studies * * * conducted by or otherwise obtained by the applicant'' during the annual reporting period. FDA intends to interpret this section to require ANDA applicants with approved ANDAs to submit reports of all BE studies, both passing and nonpassing, conducted or obtained by the applicant during the annual reporting period on the approved drug product.

IV. Comments on the Proposed Rule

FDA received 11 comments on the proposed rule from manufacturers, trade associations, and law firms. On June 11, 2004, FDA held a meeting to discuss the proposed rule with the Generic Pharmaceutical Association (GPhA). The meeting minutes have been entered into the docket, and the comments provided by GPhA are included in the comments we respond to in this document. The majority of the comments supported the proposed amendments to FDA's regulations. Several comments requested clarification on various aspects of the rule. The final rule is described in section III of this document.

A. General Comments

(Comment 1) Several comments, including comments from manufacturers, law firms, and trade associations, commended FDA on the proposal. In particular, these comments noted the importance of requiring the submission of all bioequivalence data to assess the safety and effectiveness of ANDA products, and to enhance FDA's knowledge concerning bioequivalence.

(Response) We appreciate the support expressed in these comments and agree that requiring the submission of these data is very important.

(Comment 2) One comment specifically commended FDA for stating in the proposed rule that the agency is not aware of any adverse public health consequences associated with products for which studies were not submitted, nor of any information on any currently marketed generic product suggesting that the product is not bioequivalent to a reference listed drug to which it has been designated as therapeutically equivalent.

(Response) FDA notes that since publication of the proposed rule, we have not become aware of any such information.

(Comment 3) In the preamble to the proposed rule we stated: ''Even when additional BE studies are not critical to the agency's bioequivalence determination for the specific product being reviewed, the data provide valuable scientific information that increases the agency's knowledge and understanding of bioequivalence and generic drug development and promote further development of science-based bioequivalence policies'' (68 FR 61640 at 61641). One comment stated that the goal of increasing FDA's knowledge and understanding of bioequivalence should not be accomplished by imposing regulatory requirements on ANDA applicants. This comment suggested that the appropriate way to achieve this goal will be to hold joint industry-agency meetings and conferences.

(Response) We agree with the comment that if the sole purpose of this rule was to increase the agency's understanding of BE, there would be alternative means for FDA to achieve this goal. As stated in the proposal, however, the primary purpose of the requirement to submit information from all BE studies on the same drug product formulation is that ''[d]ata contained in additional passing and nonpassing BE studies can be important to FDA's assessment of bioequivalence for a specific product'' (68 FR 61640 at 61641). Currently, ANDA applicants are only required to submit one BE study (or two, if a fed study is required). Based on one or two studies, FDA might conclude that the product is bioequivalent to its RLD. If the agency receives other BE studies conducted by the applicant, and these studies failed to show bioequivalence, the agency might make a different decision about whether to approve the ANDA than it would have if the agency had received only the passing study. In such a case, receipt of additional BE studies will be critical to FDA's determination as to whether a generic product is equivalent to its RLD. Unless FDA receives all BE studies on the same drug product formulation, it is not possible for the agency to make an informed, scientifically based decision about bioequivalence. Thus, the rule requires that all BE studies conducted on the same drug product formulation be submitted. In other cases, FDA's receipt of additional BE studies might not change the agency's decision that a product is bioequivalent to its RLD. In both cases, however, review of the additional studies will serve the ancillary purpose of increasing the agency's understanding of bioequivalence, and provide added confidence in the agency's BE determination. In setting out the second purpose (that of increasing the agency's knowledge of bioequivalence), we note in the preamble to the proposed rule that this ancillary purpose is served even when the additional BE studies do not prove to be critical to the agency's bioequivalence determination for the specific product being reviewed (68 FR 61640 at 61641).

(Comment 4) One comment suggested that FDA amend § 314.127(b) of its regulations to reflect that failure to submit all required BE study reports is grounds for receiving an ''unapprovable'' letter.

(Response) FDA generally disagrees with the comment. Failure to submit all BE studies will be grounds for refusing to receive the ANDA under § 314.101(b)(1) of FDA's regulations because the ANDA will not be complete. It should be noted that section 505(j)(4) of the act describes the grounds for refusing to approve an ANDA. Under certain circumstances, one or more unreported BE studies might provide the basis for refusing to approve an ANDA under section 505(j)(4)(F) of the act (''information submitted in the application is insufficient to show that the drug is bioequivalent * * *''). See also § 314.127(a)(6). For example, if,

while an ANDA is pending, FDA discovers that the ANDA omitted one or more studies that failed to demonstrate BE, FDA might conclude that the BE information in the application is insufficient.

(Comment 5) Several comments expressed concern about the burden that will be imposed on the ANDA review process and agency resources (e.g., reviewers and inspectors) when the rule is implemented. One comment expressed concern that the workload created by this rule will slow action on pending ANDAs. Another comment noted that FDA has been trying to reduce the time both for BE review and response to correspondence by the Office of Generic Drug's (OGD's) Division of Bioequivalence. This comment suggested that adequate hiring and retention should be established in the Division of Bioequivalence before implementing the rule.

(Response) FDA crafted the requirements of the rule mindful of balancing its need for additional BE information with the need to ensure that the ANDA review process is not unnecessarily burdened. It was the desire to achieve this balance that, in part, led FDA to require only the submission of BE studies conducted with the ''same drug product formulation'' as that submitted for approval, rather than requiring the submission of all BE studies conducted with all developmental formulations, as some comments suggested. FDA appreciates, however, that the final rule will increase the number of studies reviewed by the Division of Bioequivalence, and the agency is working on hiring additional staff to handle this increase. FDA is also developing databases that will help decrease the amount of correspondence received by OGD. We believe these steps will ensure that the ANDA review process continues to be efficient.

(Comment 6) In the preamble to the proposed rule, FDA stated that an applicant ''will rarely, if ever, conduct a postmarketing BE study other than one required for an ANDA supplement'' (68 FR 61640 at 61643). One comment suggested that requiring applicants to submit failing BE studies will create an additional disincentive to perform postmarketing BE studies, which may discourage applicants from considering ways to improve their manufacturing processes.

(Response) FDA believes that the concern expressed in the comment is unfounded. The major disincentives to performing postmarketing BE studies are the financial costs and resource expenditures for the applicant. That is why such studies are rarely performed, except when required for an ANDA supplement. In any event, FDA believes that any potential disincentive created by requiring that such studies be submitted to the agency will be negligible. Moreover, FDA believes that industry will agree that because the drug will already be on the market, in the event that a postmarketing study fails to demonstrate bioequivalence, it would be particularly important for the agency and the applicant to examine the reason for the failure.

(Comment 7) One comment stated that if ANDA holders are going to be required to submit failed studies performed in accordance with the SUPAC guidances, new drug application (NDA) holders should also be required to submit such studies.

(Response) NDA applicants and NDA holders are already required to submit failed BE studies. Section 314.50(d)(3) of FDA regulations requires an NDA to contain a description of all bioavailability and pharmacokinetic studies in humans performed by or on behalf of the applicant. The requirement to submit bioavailability studies includes reports of any bioequivalence studies performed by or on behalf of the applicant.

B. Same Drug Product Formulation

(Comment 8) Several comments requested clarification of the term ''same drug product formulation.'' One comment stated that clarification of the language was important to ensure that it was not subject to varying interpretations by ANDA applicants.

(Response) The final rule adds in § 320.1(g) a definition of the term ''same drug product formulation'' to mean the formulation of the drug product submitted for approval and any formulations that have minor differences in composition or method of manufacture from the formulation submitted for approval, but are similar enough to be relevant to the agency's determination of bioequivalence. FDA's draft guidance on the submission of BE data, when available, will expand on this definition by providing specific examples of formulations that FDA considers to be the same drug product formulation. For example, FDA considers two drug products that use different ingredients intended to affect the color or flavor of the drug product, or use a different technical grade and/or specification of an excipient, to be the same drug product formulation. If an applicant has questions that are not answered by the draft guidance on submission of BE data, the applicant should contact OGD for assistance in applying the term ''same drug product formulation.''

(Comment 9) Two comments asked FDA to revise the concept ''same drug product formulation.'' One comment requested that the term be limited to ''studies which are statistically powered correctly and have a batch size of at least 100,000 packaged units.'' Another comment asked that the term be broadly interpreted to require the submission of all BE studies performed on the various formulations of a drug for which an ANDA is ultimately submitted. For example, the comment suggested that ANDA applicants should be required to submit BE studies performed on formulations that differ by SUPAC level 3 changes from the formulation submitted for approval. The comment suggested that failure to broadly interpret ''same drug product formulation'' will result in ANDA applicants making certain SUPAC level 3 changes (such as changing the manufacturing site) in an attempt to avoid submitting failed study results. In addition, the comment noted that the submission of all BE data on all formulations could serve the ancillary purposes of helping FDA to: (1) Refine the SUPAC levels and (2) establish chemistry, manufacturing, and controls specifications.

(Response) FDA disagrees with both of these comments. The term ''same drug product formulation'' is intended to balance competing concerns. To limit the definition to require only the submission of studies that are statistically powered correctly and have a particular batch size could undermine the goals of the rule. Such a limitation will result in FDA failing to receive results from pilot studies. As discussed in greater detail below, FDA appreciates that if a pilot study is underpowered, it cannot be expected to satisfy BE criteria. Nevertheless, such studies provide valuable information that is relevant to FDA's bioequivalence determination. Therefore, FDA declines to limit the scope of the term ''same drug product formulation'' as suggested in the comment.

FDA also declines to broadly interpret the definition to include all formulations tested during the drug's development program. Such an interpretation would: (1) Increase the burden on ANDA applicants, (2) likely result in the submission of data irrelevant to the agency's determination of bioequivalence, and (3) potentially slow the ANDA review process without enhancing FDA's ability to analyze whether the formulation submitted for approval is bioequivalent to the RLD. Moreover, FDA believes that the

comment's concern about ANDA applicants making SUPAC level 3 changes to a formulation to avoid submitting failing results is not relevant to the final rule. As discussed above, the final rule does not use the SUPAC guidances to interpret the term ''same drug product formulation.'' Moreover, if a formulation failed to demonstrate bioequivalence, it is unlikely that manufacturing the same or very similar formulation at a different site would result in a passing BE study for submission in an ANDA. (Note that the issue of a change in manufacturing site is also discussed in the response to comment 15.) In addition, FDA believes that the intended goals of the rule are best served by focusing the agency's review on data relevant to the formulation submitted for approval. Therefore, the agency believes that the disadvantages of employing such a broad interpretation of ''same drug product formulation'' outweigh the theoretical benefits. Overall, FDA believes that its definition of ''same drug product formulation'' strikes an appropriate balance.

(Comment 10) One comment suggested that FDA's definition of ''same drug product formulation'' resulted in an inconsistency between how FDA treats changes pre- and postapproval. Specifically, the comment suggested that because a BE study will not be required for a SUPAC level 1 or 2 change postapproval, FDA should not require that BE data be submitted preapproval for a formulation that differs only by a SUPAC level 1 or 2 change from the formulation submitted for approval.

(Response) This comment reflects the confusion created by our proposal to rely on SUPAC guidance concepts to determine when a drug has the same formulation for purposes of this rule. The SUPAC guidances provide recommendations for when FDA will require the conduct of a BE study to support a formulation or manufacturing change submitted in an amendment or supplement. In short, they provide guidance for when new data will be required to support a change to the drug product.

In contrast, this rule does not address when data are required to support a product application or product change. It does not require that a new study be conducted under any circumstances. The rule merely addresses situations where an applicant has conducted BE studies in addition to those it seeks to rely on in its ANDA or ANDA amendment or supplement. It also indicates when the results from those additional studies must be submitted to FDA, because they were conducted on a drug product formulation that is the same as, or similar to, that covered by the application. While SUPAC is focused on determining what product changes will trigger the need for new data to support the change, this rule focuses on when existing data must be submitted to FDA, because they are relevant to the drug product with the same formulation.

FDA had initially proposed to refer to the SUPAC guidances to determine when drug products with minor changes are considered to be the same formulation. Under SUPAC, level 1 or 2 changes to a drug product formulation do not require a manufacturer to conduct BE testing or submit BE data in order to market the drug product with those changes. Level 3 changes are fairly significant and require a manufacturer to conduct a BE test to demonstrate the equivalence between the new and old formulations before it may market the new formulation. However, under this rule, BE test data on a product that is three SUPAC levels different from the approved or marketed formulation would not need to be submitted if that formulation is not, and will not, be marketed. In the proposed rule, we suggested that BE data on products reflecting modest changes, described as SUPAC level 1 and 2 changes, are relevant to the marketed formulation and would need to be submitted. As a result, reference to the SUPAC concepts created confusion, because the instances where SUPAC recommends that manufacturers conduct and submit BE test data to support product changes were the exact situations where this rule would not require submission of existing BE data, because the data are of limited applicability to the formulation subject to the application. Accordingly, we are no longer referring to the SUPAC guidances in the final rule. Instead, we have included a definition of ''same drug product formulation'' in § 320.1(g) of the final rule, in order to provide assistance in determining when this rule requires submission of BE data on a similar formulation.

C. Bioequivalence Studies That Must Be Submitted

(Comment 11) Several comments requested clarification about the types of studies that will be required to be submitted under the rule. In particular, several comments questioned whether ''pilot studies'' or studies that were designed not to evaluate BE, but to generate BE data, will have to be submitted under the rule. Such studies could be performed to: (1) Obtain information related to the performance of prototype drug formulations, (2) estimate the appropriate number of subjects necessary for the definitive BE study, (3) determine the appropriate plasma concentration time curves, or (4) determine whether a drug entity can be reliably measured in the media chosen. Some comments suggested that such studies should not be required to be submitted because they may not be powered to pass BE statistical criteria and, as a result, are arguably not ''BE studies.''

(Response) The term ''all other bioequivalence studies'' is used in the rule without limitation. It is intended to capture all studies generating BE data, including pilot studies. Therefore, complete or summary reports of pilot studies conducted with formulations that are the ''same drug product formulation'' as that submitted in the ANDA must be submitted under the rule. FDA believes that the submission of pilot studies is important because they may provide valuable BE information. For example, they may provide FDA information about the assay used in the BE study relied on for approval. FDA appreciates the concern raised in the comments about pilot studies potentially being underpowered and not designed to evaluate bioequivalence. The agency will fully consider these issues when reviewing pilot studies. If a pilot study is not properly powered, FDA will not expect it to demonstrate bioequivalence.

(Comment 12) One comment asked if the rule will require submission of pilot pharmacokinetic studies in animals or in vitro studies.

(Response) The final rule does not require the submission of animal studies. In vitro studies must be submitted when in vitro testing is conducted to demonstrate bioequivalence (§ 320.24(b)(5)). Examples include in vitro testing for nasal sprays and resin binding testing for bile acid sequestrants. When an in vivo study is submitted to show bioequivalence of a formulation, all other in vivo and in vitro bioequivalence data, both passing and nonpassing, for that formulation must be submitted as well. Similarly, when an in vitro study is submitted to show bioequivalence of a formulation, all other in vivo and in vitro bioequivalence data, both passing and nonpassing, for that formulation must be submitted. The data from in vitro dissolution studies conducted for purposes other than to show bioequivalence need not be submitted under this rule, but may be required by other regulations (for example, § 314.94(a)(9)). In the proposed rule,

FDA cited § 320.24 as the regulatory requirement which ''sets forth the types of evidence acceptable to establish bioequivalence.'' According to § 320.24(a), bioavailability may be demonstrated by several in vivo and in vitro methods. Section 320.24 makes it clear that bioequivalence studies may consist of either in vivo or in vitro studies.

Since reviewing the comments to the proposed rule, FDA has become aware that the language of the proposed rule may cause confusion regarding the requirement that all in vitro bioequivalence studies must be submitted. In particular, the section heading of § 320.21, ''Requirements for submission of in vivo bioavailability and bioequivalence data,'' may lead to this misinterpretation. Thus, in this final rule, FDA is changing the section heading of § 320.21 so that it removes the specific reference to in vivo data.

(Comment 13) One comment asked if prior studies that are not directly relevant to the assessment of BE by the current criteria must be submitted. For example, if the current BE recommendation for a particular product specifies a pharmacokinetic study on the parent drug in plasma, will the following types of studies have to be submitted: A pharmacokinetic study on the metabolite only, a pharmacokinetic study in urine, a pharmacodynamic study, a clinical endpoint BE study or other clinical study, a sensitization or irritation study for transdermal patches, etc.?

(Response) Yes, all studies on the same drug product formulation as defined in this final rule must be submitted regardless of what FDA's current criteria for BE testing for the product are. Otherwise, the agency might not be aware of a study that is relevant to our determination of whether two products are bioequivalent. For example, if a firm conducted a pharmacodynamic study that failed to show BE, and then conducted a pharmacokinetic study that demonstrated BE, we would want to know about the pharmacodynamic study.

(Comment 14) One comment noted that the SUPAC guidance states that for narrow therapeutic index (NTI) drugs, biostudies are required for all formulation changes except level 1 changes. The comment asked whether this means that biostudies on any formulations differing by more than SUPAC level 1 for NTI drugs will not need to be submitted under the new rule.

(Response) As discussed in section III of this document, the final rule does not use the SUPAC guidances to explain what the regulation means by ''same drug product formulation.'' Instead, the final rule defines ''same drug product formulation'' as the formulation of the drug product submitted for approval and any formulations that have minor differences in composition or method of manufacture from the formulation submitted for approval, but are similar enough to be relevant to the agency's determination of bioequivalence. Under the final rule, all biostudies on the same drug product formulation must be submitted, regardless of the level of change under SUPAC.

(Comment 15) One comment asked if a change in manufacturing site alone (a SUPAC level 3 change) will make the products at the original and new sites not the same drug product formulation even if the formulations and manufacturing processes were otherwise identical.

(Response) No. Manufacturing site changes are not relevant to the definition of ''same drug product formulation.'' Studies conducted for products that are considered the ''same drug product formulation'' must be submitted whether the products are manufactured at the same or different manufacturing sites.

(Comment 16) One comment stated that in some cases, it may be impossible to determine whether a particular older formulation on which a biostudy had been conducted falls within the scope of a SUPAC level 2 change from the approved or submitted formulation. For example, the older formulation has only single point dissolution data, precluding an f2 comparison; or multiple dissolution conditions were used, some of which yield f2 factors greater than 50 and some less than 50. In such cases, how is an applicant to decide whether or not a biostudy on an older formulation needs to be submitted?

(Response) If a biostudy was conducted on a product that is the same drug product formulation as defined in the final rule, it must be submitted. Dissolution testing is not a criterion for submission.

(Comment 17) One comment stated that the language defining the ''final formulation'' may not capture all relevant bioequivalence data. For example, formulations containing an active ingredient with a particle size or morphic form that differs from the drug for which the ANDA is submitted would not be considered the ''final formulation'' of the drug. Thus, ANDA sponsors would not be required to submit bioequivalence data performed on these formulations, although such differences might affect the drug's pharmacokinetic profile, safety, and effectiveness.

(Response) FDA disagrees. The term ''same drug product formulation,'' as defined in § 320.1(g) of this rule, includes formulations that differ in particle size and morphic form; thus, studies on such formulations would need to be submitted to FDA.

Section 505(j)(2) of the act specifies that an ANDA must contain, among other things, information to show that the active ingredient in the generic drug product is the ''same as'' that of the RLD. Section 314.92(a)(1) of FDA regulations provides that the term ''same as'' means, among other things, ''identical in active ingredient(s).'' In the discussion of ''sameness'' of active ingredient(s) in the preamble to the final rule adopting the ANDA regulations, FDA specifically rejected a proposal that would have required an ANDA applicant to show that the active ingredient in its generic drug product and the active ingredient in the RLD ''exhibit the same physical and chemical characteristics, that no additional residues or impurities can result from the different manufacture or synthesis process and that the stereochemistry characteristics and solid state forms of the drug have not been altered'' (57 FR 17950 at 17958, April 28, 1992). Differences in particle size and polymorphic forms of a drug substance are not differences in chemical structure, but only in internal solid-state structure.

(Comment 18) One comment questioned whether FDA's interpretation of § 314.81(b)(2)(vi) will require an applicant to submit studies performed by someone other than the applicant. For example, will the applicant be required to submit a study performed by a competitor (a ''challenge study'')? The comment noted that a complete or summary report may not be available to the applicant. Another comment asked if it will be necessary to conduct literature searches to find BE studies conducted by third parties.

(Response) Section 314.81(b)(2)(vi) requires the submission of data from ''biopharmaceutic, pharmacokinetic, and clinical pharmacology studies * * * conducted by or otherwise obtained by the applicant.'' This language clearly contemplates that if an applicant obtains the results of a study conducted by a third party, the results must be submitted in the annual report. It will not be necessary to conduct literature searches to find BE studies conducted by third parties. However, if an applicant obtains a complete or summary report, that report must be submitted. If the applicant obtains study

results in a form other than a complete or summary report, those results must be submitted in the annual report.

(Comment 19) One comment asked whether the rule requires applicants to contact previous owners of the ANDA to obtain BE studies.

(Response) Section 314.72 of FDA regulations concerns change in ownership of an application. Section 314.72(a)(2)(iii) requires the new owner of an application either to submit to FDA a statement that the new owner has a complete copy of the approved application, or to request a copy of the application from FDA. In addition, FDA believes it is incumbent upon the purchaser of an ANDA to request from the owner all biostudies conducted on the drug product, even if they were not submitted to the ANDA.

D. Summary and Complete Reports

(Comment 20) One comment stated that FDA should clarify the appropriate content of complete and summary reports to ensure that FDA receives the information necessary to fully evaluate bioequivalence.

(Response) FDA believes that applicants are aware of the appropriate content of a complete BE study report, as they are currently required to submit such a report for the study relied on for ANDA approval. The draft guidance on the submission of BE data, when available, will discuss the content of summary reports in greater detail.

(Comment 21) One comment suggested that the submission of complete or summary reports of all other BE studies is unnecessary. Instead, the comment suggested, the product development report submitted as part of the ANDA may be the most appropriate place to put a small summary of the results of all bioequivalence studies performed on the product prior to ANDA submission.

(Response) FDA disagrees with this comment. While FDA agrees that the product development report provides helpful information for the ANDA review process, a small summary of all bioequivalence studies in the product development report will be insufficient to satisfy the objectives of the rule. The agency is requesting complete or summary reports of the studies in order to be able to evaluate the study design and the resulting data. A small summary in the product development report will likely provide insufficient information for the agency to adequately evaluate why certain studies failed and others passed.

(Comment 22) One comment stated that in many cases, an applicant may request only a summary report from a contract research organization (CRO) when a test product has failed to meet standard BE criteria. Therefore, if after the applicant submits the summary report, FDA requests a complete report, the applicant will need additional time and will incur additional costs for the CRO to generate a complete report.

(Response) FDA appreciates that industry's current practice may be to request only summary reports from CROs for failing studies. As noted in the preamble to the proposed rule, FDA foresees that in the majority of cases, a summary report will be sufficient to satisfy the rule. For example, in the case of a pilot study that was not powered to demonstrate bioequivalence, the agency does not foresee the need for a complete report. However, in light of the new submission requirements, the agency encourages applicants to consider whether there is a clear reason, such as failure to properly power the study, for a study's failure to demonstrate bioequivalence. In cases where the reason the study failed is unclear, the applicant may want to consider requesting a complete report rather than a summary report from the CRO to assist the applicant in evaluating the study.

E. FDA Criteria for Evaluating Studies

In the preamble to the proposed rule, FDA listed the following four factors as examples of criteria it will use to evaluate BE studies when at least one study failed to demonstrate bioequivalence: (1) The statistical power of the studies, (2) minor differences in the formulation used in each study, (3) whether the product was administered consistently with the RLD's labeling in every study, and/or (4) various other study design issues (68 FR 61640 at 61641).

(Comment 23) While recognizing that it is impossible for FDA to prospectively identify all potential issues, two comments requested clarification about the criteria FDA plans to use to: (1) Determine when to require the submission of a complete report of a study when a summary report has been previously submitted and (2) evaluate bioequivalence when at least one of the studies submitted by the applicant failed to demonstrate bioequivalence. In particular, the comments requested clarification about: (1) What additional data will be required to demonstrate to FDA that a drug is bioequivalent to the RLD, (2) whether FDA will be primarily concerned with the conditions under which the drug was administered or the rationale for the selection of certain types of study design characteristics, and (3) whether decisions about bioequivalence will be at the sole discretion of the reviewer. Another comment asked how conflicting results from two or more BE studies will be assessed. In particular, the comment asked if FDA will perform a meta-analysis on pooled studies. One comment expressed concern that if criteria were not provided, it could increase the costs associated with compliance with the rule.

(Response) Generally, the criteria FDA reviewers will use to evaluate BE studies submitted in response to the rule are the same as the criteria they currently use to evaluate BE studies relied on for ANDA approval. Those criteria have been discussed in detail in various FDA guidances (available on the Internet at *http://www.fda.gov/cder/guidance/index.htm* under Biopharmaceutics). When an applicant is submitting both passing and nonpassing studies, it should include its own analyses of the data and any potential explanations for nonpassing results. The decision tree used by the applicant will likely be similar to that used by FDA. While it is impossible to prospectively state which issues will be most relevant in any particular case, examples of likely questions that should be included in that decision tree are:

- Was the study correctly powered?
- Was the assay appropriate?
- Was the formulation inappropriate, and if so, how has the formulation been changed?
- Was the drug properly administered in the failing study?
- Were there technical flaws in the way the study was conducted?

The applicant's explanations for failing results will likely be a reviewer's first step in evaluating whether to request the submission of a complete report of any particular study. FDA anticipates that, in most cases, a summary report will be sufficient. The applicant's explanations will also likely be a reviewer's first step in evaluating how to weigh conflicting BE data. However, the reviewer will also undertake an independent scientific analysis of the study reports submitted. FDA will not rely on a meta-analysis of pooled studies.

As the comments recognize, it is difficult to predict what type of information FDA may request to assure the agency that the drug is bioequivalent to the RLD. For example, FDA may choose to inspect the site where a submitted study was conducted, or FDA may request additional data. As discussed in the proposed rule, the responsibility to demonstrate that the ANDA product is bioequivalent to the RLD rests with the applicant. Therefore, it will ultimately be the applicant's

responsibility to demonstrate why the nonpassing study or studies should not affect a determination that the ANDA product is bioequivalent to the RLD.

(Comment 24) One comment stated that the four examples provided by FDA in the preamble to the proposed rule regarding the criteria for evaluating BE studies submitted (i.e., statistical power, minor differences in formulations, product administration, and other study design issues) are so critical that FDA should require the submission of all BE studies conducted on all formulations of the drug, rather than only requiring the submission of studies conducted on the ''same drug product formulation.'' As an example, the comment stated that requiring the submission of all studies conducted on all formulations will allow FDA to identify situations where an applicant used increasingly larger sample sizes in their bioequivalence studies. Similarly, the comment notes that, by listing ''minor differences in formulation'' as an evaluation factor, FDA has acknowledged that formulation changes are relevant to analyzing bioequivalence. The comment states that this underscores the need to require the submission of passing and nonpassing studies on all formulations.

(Response) As discussed in greater detail in response to comment 5, the decision to require the submission of BE studies conducted on the ''same drug product formulation'' as that submitted for approval was based on a need to balance competing concerns. Requiring the submission of all studies conducted on all formulations, regardless of their relationship to the formulation submitted for approval, will unnecessarily burden applicants and the review process without a resulting benefit. Therefore, FDA declines to adopt this suggestion.

(Comment 25) Several comments requested information about the dispute resolution procedure that will be used if both passing and nonpassing studies are submitted. In particular, the comments highlighted the need for prompt resolution when the applicant and the agency disagree about how study results should be interpreted. The comments suggested that the dispute resolution procedure should be efficient to ensure a timely review process. One comment questioned whether a new administrative procedure is going to be developed for the resolution of potential disputes.

(Response) FDA does not believe that a new procedure will be necessary to resolve any potential disputes arising from the submission of additional BE studies. If FDA has questions about an applicant's explanation as to why a particular study failed or needs additional information to continue its review of the application, FDA will communicate with the applicant in the same manner as it does to resolve any other ANDA issue. FDA also notes there are dispute resolution procedures available to resolve differences between applicants and FDA. See 21 CFR 10.75 and 21 CFR 314.103, as well as Center for Drug Evaluation and Research/ Center for Biologic Evaluation and Research guidance for industry entitled ''Formal Dispute Resolution: Appeals Above the Division Level.''

F. Enforcement

(Comment 26) One comment questioned how FDA intends to enforce and monitor compliance with the rule. In particular, the comment suggested that FDA should not rely on its preapproval inspection authority to monitor compliance with the rule. The comment expressed concern that investigators may not have the opportunity to look for failed studies during preapproval inspections or, at a minimum, may not be focused on looking for them. The comment also points out that Compliance Program Guidance Manual 7346.832 states that preapproval inspections are not mandated for narrow therapeutic range index drugs or the top 200 prescribed drugs. The comment suggested that rather than relying on investigators to examine studies, OGD scientists are the most appropriate personnel for determining whether study results affect FDA's bioequivalence determination.

(Response) As discussed in the response to comment 7, § 314.50(d)(3) of FDA regulations already requires NDA applicants to submit a description of all bioavailability and pharmacokinetic studies in humans performed by or on behalf of the applicant. That regulation does not contain a specific enforcement provision, and FDA believes it is not necessary to provide a specific enforcement mechanism for this final rule, which imposes similar duties on ANDA applicants. Moreover, in certain circumstances, noncompliance with this final rule could be considered a violation of 18 U.S.C. 1001, which prohibits knowingly and willfully falsifying or concealing a material fact from a branch of the Federal government.

FDA agrees that it is not appropriate to rely solely on preapproval inspections of manufacturing facilities to look for BE studies. However, the agency has a variety of different enforcement and oversight mechanisms that we use to ensure compliance with data submission requirements.

FDA agrees with the comment's suggestion that OGD's scientists are the most appropriate personnel to determine how BE study results should affect a bioequivalence determination. Any studies identified by FDA will be forwarded to OGD scientists for consideration.

FDA's initiative ''Pharmaceutical cGMPs for the 21st Century'' promotes a science and risk-based approach to product quality regulation. Compliance Program Guidance Manual 7346.832 was revised to reflect the approach described in the 21st Century initiative.

(Comment 27) In the preamble to the proposed rule, FDA stated that it may inspect sites where BE studies were conducted to determine whether there were technical flaws in the way they were performed (68 FR 61640 at 61641). Two comments questioned whether such inspections, particularly of sites in foreign countries, will slow down the ANDA review process. One comment focused on pilot studies performed by CROs in foreign countries and questioned whether the inspection of such sites could lead to approval delays.

(Response) FDA appreciates the concern expressed in the comments. FDA's inspection resources are limited, and the agency does not anticipate routinely inspecting every site for every BE study submitted. The agency may, however, inspect any study sites it determines appropriate in order to assess whether a generic drug is bioequivalent to its RLD.

(Comment 28) One comment stated that FDA should not rely on field investigators to discover the existence of BE studies.

(Response) FDA expects that most, if not all, applicants will comply with this final rule and submit the appropriate BE studies of which they are aware. The agency will not comment on its methods of investigation with respect to enforcement of the final rule. However, the agency agrees that field investigators should not be the only source for discovering the existence of BE studies.

G. Miscellaneous

(Comment 29) One comment asked what event determines the date the study was conducted for purposes of deciding whether a biostudy needs to be submitted.

(Response) The event that should be considered to determine whether a BE study must be submitted under this regulation is the date the first dose in the study was administered. This date should be readily identifiable by the applicant and FDA.

(Comment 30) Two comments questioned whether it was necessary for

applicants to retain samples for studies other than the BE study relied on for approval.

(Response) It is not necessary to retain such samples. Applicants are only required to retain samples for the BE study relied on for approval.

(Comment 31) Two comments asked whether FDA will apply the Freedom of Information Act (FOIA) to failed BE studies submitted to FDA under the rule. The comments expressed concern that if such studies are made available to the public, confidence in generic drugs could be undermined, and companies may use this information to disparage other companies and their products.

(Response) Information submitted on passing and nonpassing bioequivalence studies will be available for public release after approval of the application or supplemental application, consistent with FDA's disclosure regulations in 21 CFR part 20 and § 314.430, and with the FOIA. While FDA appreciates the concern expressed in the comment, the agency notes that in addition to the study results, the applicant's explanations concerning failed studies and the agency's determination and the basis for its determination of bioequivalence will also be publicly available. We believe the availability of this information should assuage the comments' concerns.

H. Economics

(Comment 32) Two comments suggested that FDA's estimate that the rule will result in a 10 percent increase in the number of BE studies submitted to the agency was too conservative. One comment stated that, based on its informal survey of generic drug companies, the number will be larger. The other comment noted that, because the number of ANDA applications and correspondence documents has risen in recent years, the 10-percent estimate is not reflective of recent trends.

(Response) FDA recognizes that the number of ANDAs and related submissions has increased in recent years. However we are not able to accurately predict the number or pattern of future submissions. Due to this uncertainty, the agency assumed, for the reasons discussed in the preamble to the proposed rule, that the number of BE studies submitted annually will increase by approximately 10 percent. This estimate is based on information suggesting that approximately 20 percent of all BE studies conducted produce results that do not meet bioequivalence limits, and that approximately 50 percent of these studies are conducted on formulations that are not submitted for approval. The comments appear to acknowledge the uncertainty of trying to predict the exact increase in the number of studies submitted, because neither comment suggests an alternative number to FDA's estimate of 10 percent. Therefore, FDA continues to estimate that the increase in the number of studies submitted will be approximately 10 percent. The economic analysis in the proposed rule, however, relied on year 2000 data for the number of submissions received by the agency. To ensure that the economic analysis reflects current trends, FDA has revised the economic analysis (section VIII of this document) to reflect the most current data available on the number of submissions received by the agency.

(Comment 33) One comment suggested that the compliance requirements and cost analysis in the preamble to the proposed rule were flawed because they failed to consider costs in addition to staff time. The comment noted that companies often employ CROs to conduct activities related to the design, initiation, conduct, and report generation of BE studies. The comment suggested that companies may routinely request complete reports from CROs, as opposed to summary reports, in the event FDA requests a complete report. The comment also questioned FDA's estimate that summary reports will be required approximately 80 percent of the time and complete reports will be required approximately 20 percent of the time.

(Response) FDA acknowledges that it is impossible to predict precisely how often a complete report will be requested in the future. However, the agency's estimate that a complete report will be required only 20 percent of the time was based on its belief that, in most cases, the reason a study failed will be evident from the information provided in the summary report and the applicant's explanations. FDA does not believe that the use of a CRO to conduct a study affects its economic analysis. When a company contracts with a CRO, it may stipulate the reporting format for the study. FDA does not believe that stipulating a report format for BE studies in accordance with this rule will create a significant burden for any affected entity.

(Comment 34) One comment noted that FDA cited its desire to increase the agency's knowledge and understanding of bioequivalence as an objective of the rule. The comment questioned whether the costs associated with the submission of ''all other bioequivalence studies,'' and the resolution of why various studies failed, were justified by this objective.

(Response) As discussed in greater detail in section VIII of this document, FDA believes the costs of the rule are justified by the multiple objectives we hope to achieve through this final rule. The objective cited by the comment is a secondary objective of the rule. In addition to increasing FDA's knowledge, the submission of all BE studies is necessary because the data contained in passing and nonpassing BE studies provide information that can be important to FDA's assessment of the bioequivalence for a specific product.

V. Legal Authority

Section 701(a) of the act (21 U.S.C. 371(a)) authorizes FDA to issue regulations for the efficient enforcement of the act. Under section 505(j)(2)(A)(iv) of the act, an ANDA applicant must submit ''information to show that the new drug is bioequivalent to the [reference] listed drug * * *.'' If this requirement is not met because information submitted in the application is insufficient to show that the drug is bioequivalent to the listed drug referred to in the application, FDA may deny approval of an ANDA (section 505(j)(4)(F) of the act; § 314.127(a)(6)(i) and (a)(6)(ii)). FDA believes that an application may not be complete if a BE study that is conducted by an applicant on the same drug product formulation is not submitted for review, because the agency is being asked to make a bioequivalence determination based on a review of only part of the available bioequivalence data. The agency's experience with additional bioequivalence data on the same drug product formulation has shown that such data can be important, and even critical, to the agency's bioequivalence determination.

Requiring the reporting of all BE studies is consistent with the act's requirement that applications must not contain untrue statements of material fact (section 505(j)(4)(K) of the act; § 314.127(a)(13)). FDA believes that failure to report all BE studies conducted on the same drug product formulation as that submitted for approval in an ANDA, amendment, or supplement may constitute selective reporting of a material fact, which can result in withdrawal of approval of an application under § 314.150(b)(6). Selective reporting refers to reports that contain certain passing results only. It may not include nonpassing results and/or the scientific justification for rejecting the nonpassing data (see FDA's notice describing selective reporting of

stability tests (60 FR 32982 at 32983, June 26, 1995)).

VI. Effective Date

Revised §§ 314.94(a)(7)(i), 314.96(a)(1), 320.1(g), 320.21 (section heading), and 320.21(b)(1), as well as § 320.21(c) (which references the requirements of § 320.21(b)(1)) and § 314.94(a)(7)(ii) (as interpreted in section III of this document), apply to ANDAs, amendments, or supplements submitted on or after the effective date. Thus, with respect to ANDAs, amendments, or supplements submitted prior to the effective date, applicants are not required to report additional BE studies that were conducted in conjunction with their applications. However, when an ANDA has been approved or submitted prior to the effective date of the final rule, and a supplement or amendment to the ANDA containing a BE study or studies is submitted on or after the effective date, the applicant is required under §§ 314.96(a)(1) and 320.21(b)(1), as well as § 320.21(c) (which refers to the requirements of § 320.21(b)(1)), to submit all BE studies, both passing and nonpassing, conducted in conjunction with the supplement or amendment. In addition, on and after the effective date, all applicants with approved ANDAs, including ANDAs that were approved or submitted for approval prior to the effective date, are required to comply with § 314.81(b)(2)(vi), as interpreted by FDA in section III of this document. As stated in response to comment 6, in the event that a postmarketing study of an approved and marketed drug fails to demonstrate bioequivalence, it would be particularly important for the agency and the applicant to examine the reason for the failure. Therefore, any annual report submitted on or after the effective date by an applicant with an approved ANDA must include reports of all BE studies on the approved drug product, both passing and nonpassing, conducted or obtained by the applicant during the annual reporting period, including those studies conducted before the effective date but within the applicant's annual reporting period.

VII. Environmental Impact

The agency has determined under 21 CFR 25.30(h) that this action is of a type that does not individually or cumulatively have a significant effect on the human environment. Therefore, neither an environmental assessment nor an environmental impact statement is required.

VIII. Analysis of Economic Impacts

FDA has examined the impacts of the final rule under Executive Order 12866 and the Regulatory Flexibility Act (5 U.S.C. 601–612), and the Unfunded Mandates Reform Act of 1995 (Public Law 104–4). Executive Order 12866 directs agencies to assess all costs and benefits of available regulatory alternatives and, when regulation is necessary, to select regulatory approaches that maximize net benefits (including potential economic, environmental, public health and safety, and other advantages; distributive impacts; and equity). The agency believes that this final rule is not a significant regulatory action under the Executive order.

The Regulatory Flexibility Act requires agencies to analyze regulatory options that would minimize any significant impact of a rule on small entities. Based on our economic analysis and review of comments submitted in response to the proposed rule, the agency certifies that the final rule will not have a significant economic impact on a substantial number of small entities.

Section 202(a) of the Unfunded Mandates Reform Act of 1995 requires that agencies prepare a written statement, which includes an assessment of anticipated costs and benefits, before proposing ''any rule that includes any Federal mandate that may result in the expenditure by State, local, and tribal governments, in the aggregate, or by the private sector, of $100,000,000 or more (adjusted annually for inflation) in any one year.'' The current threshold after adjustment for inflation is $130 million, using the most current (2007) Implicit Price Deflator for the Gross Domestic Product. FDA does not expect this final rule to result in any 1-year expenditure that would meet or exceed this amount.

A. Background

Under current regulations, ANDA applicants are required to submit information demonstrating that a generic product is bioequivalent to an RLD. In the past, firms have submitted only the results of those BE studies that demonstrate that the rate and extent of absorption of the test product meets bioequivalence limits. Firms have not typically submitted the results of any additional BE studies that were conducted on the same product formulation submitted for approval. The agency now believes that data and information from additional BE studies, both passing and nonpassing, are important for determining whether the proposed formulation is bioequivalent to the RLD. Therefore, this final rule requires ANDA applicants to submit the results of all BE studies, passing and nonpassing, on the same drug product formulation submitted for approval under an ANDA, amendment or supplement.

As discussed in response to comment 6, the agency also believes that it is important to clarify that the responsibility to submit the results of all BE studies, passing and nonpassing, continues after approval under the annual report submission requirements. However, the agency believes that it will be highly unusual for an ANDA applicant to conduct a postmarketing BE study. In particular, the agency believes that an applicant will rarely, if ever, conduct a postmarketing BE study other than one required for an ANDA supplement.

B. Affected Entities

This final rule will affect establishments that submit ANDAs containing BE studies. FDA does not know the precise number of entities, either large or small, that will submit ANDAs in the future. In the year 2006, there were 511 BE studies submitted by 177 applicants in 622 original ANDAs, amendments, and supplements. FDA estimates that this final rule will result in a 10-percent increase in the total number of BE studies submitted annually, or 51 (511 x 0.10) additional studies. As stated in the proposed rule, this estimate is based on information suggesting that approximately 20 percent of all BE studies conducted produce results that do not meet bioequivalence limits, and that approximately 50 percent of these studies are conducted on formulations that are not submitted for approval. Because we did not receive any comments suggesting specific alternative figures that would be more appropriate, we continue to rely on these assumptions for the economic analysis of this final rule.

C. Compliance Requirements and Costs

The main cost of complying with this final rule will be staff time. The analysis in the proposed rule assumed a weighted average wage rate of $40 per hour. The current, comparable figure for 2006 assumed in this analysis is $47 per hour (Ref. 1). FDA estimates it will require approximately 120 hours of staff time to prepare and submit each additional complete BE study report, and approximately 60 hours of staff time for each additional BE study summary report. The agency believes that a complete report will be required

approximately 20 percent of the time, while a summary will suffice approximately 80 percent of the time.

Based on a weighted-average calculation using the information presented above, the submission of each additional BE study is expected to cost $3,384 ([120 x $47 x 0.2] + [60 x $47 x 0.8]). Thus, the overall impact on the industry of reporting an additional 51 BE studies per year will be about $173,000 ($3,384 x 51 = $172,584). Assuming it equally likely that each of the 51 additional BE studies will be conducted by any of the 177 applicants, a binomial distribution can be used to predict how many firms will submit additional studies. Based on this distribution, 38 firms will incur costs of $3,384 for 1 additional BE study, 6 firms will incur costs of $6,768 (2 x $3,384) for 2 additional studies, and 1 firm will incur costs of $10,152 (3 x $3,384) for 3 additional studies (the total number of studies in the calculation does not equal 51 because of rounding). Thus, the maximum expected annual cost burden associated with this final rule for any one firm is $10,152. Approximately 75 percent (132 of 177, or 74.6 percent) of all firms are expected to incur no additional annual costs under the final rule.

D. Impact on Small Entities

FDA recognizes that some of the establishments required to submit additional BE study reports under this final rule will be small entities with limited resources. In the proposed rule, the agency acknowledged the uncertainty of its estimates with respect to the number of additional BE studies that will be submitted, their distribution among large and small entities, and the number of small entities affected. We also requested detailed comments on these important issues. After revising our Initial Regulatory Flexibility Analysis in response to the public comments received, FDA has determined that this final rule will not have a significant economic impact on a substantial number of small entities.

FDA also recognizes that requiring submission of all BE study results may result in a longer total application review time if these additional BE study results suggest that a generic product is not bioequivalent to the RLD. In these situations, firms will be required to submit additional data that demonstrate bioequivalence in order to obtain marketing approval. Marketing approval may be denied if evidence from the additional BE studies fails to establish bioequivalence. The agency does not know how frequently these situations might occur.

According to standards established by the Small Business Administration, a small pharmaceutical preparation manufacturer (North American Industry Classification System (NAICS) Code 325412) employs fewer than 750 employees (Ref. 2). An FDA review of ANDA records submitted during the 3-year period from October 1996 to September 1999 found that 32 percent of the applications (322 of 1,007) were from small entities, and that 39 percent of ANDA applicants (64 of 164) were small entities. (Resource limitations prevented the agency from being able to perform a similar, labor intensive manual search of similar records for a more recent time period.) Thus, the majority of ANDAs are not submitted by small entities. Assuming these proportions continue to hold, there will be about 69 small entities (0.39 x 177) submitting ANDAs annually. FDA also assumes that this group of small entities will submit 16 of the additional 51 BE studies (0.10 x 0.32 x 511) per year.

Assuming it is equally likely that each of the 16 additional BE studies will be reported by any of the 69 small entities, a binomial distribution can be used to predict how many of these firms will submit additional studies. Based on this distribution, 13 small entities will incur costs of $3,384 for one additional BE study, and two firms will incur costs of $6,768 (2 x $3,384) for two additional BE studies. Thus, the maximum expected burden of this final rule for any one small entity is $6,768. Nearly 80 percent (55 of 69, or 79.5 percent) of all small entities are expected to incur no additional annual costs under the final rule.

In the proposed rule, FDA relied on information indicating that the cost of preparing and submitting an ANDA was between $300,000 and $1 million (68 FR 61640 at 61645). Because we were unable to identify any similar, more recent cost estimates, we have adjusted these earlier figures for inflation to estimate the economic impact of this final rule. Our inflation adjustment was made based on percent changes in the Biomedical Research and Development Price Index (BRDPI) (Ref. 3). Based on these inflation adjustments, FDA estimates that the cost to prepare and submit an ANDA is now between $361,500 and $1.24 million. The details of our inflation adjustment calculations are summarized in table 1 of this document.

TABLE 1.—DETAILS OF INFLATION ADJUSTMENT

ANDA Cost Estimate	Base Year	Percent Change in the BRDPI from Base Year	Inflation Adjusted ANDA Cost Estimate
$300,000	2001	20.5%	$361,500
$1 million	2000	24.4%	$1.24 million

Based on this information, the maximum expected cost burden of this final rule on any one firm will be between 0.8 percent ($10,152 for three additional BE studies / $1.24 million) and 2.8 percent ($10,152 / $361,500) of the total cost of preparing and submitting an ANDA. The maximum expected cost burden for any one small entity will be between 0.6 percent ($6,768 for two additional BE studies / $1.24 million) and 1.9 percent ($6,768 / $361,500) of the total cost of preparing and submitting an ANDA.

A year 2000 survey of 26 public generic drug companies revealed 15 firms with fewer than 750 employees (as described in the proposed rule, 68 FR 61640 at 61645). Because FDA was unable to identify a similar, more recent survey available in the public domain, we have relied on this information to estimate the impact of the final rule on small entities. The 15 small entities identified in the survey had an average of 331 employees and average annual revenues of $115 million. The maximum expected burden of this final rule for any one of these small entities is therefore expected to be only 0.006 percent ($6,768 / $115 million) of average annual revenues. The agency believes this cost could be recovered through drug sales after marketing approval.

In recognition of the potential economic impact on small entities, the agency has structured the rule to minimize the reporting burden. For example, the agency believes that summary reports of additional BE studies will suffice 80 percent of the

time, provided that complete results are available to FDA upon request. The agency believes that a summary report will require only 60 hours of staff time per BE study, or half the time and expense required to prepare and submit a complete report. This provision should prove particularly beneficial for small entities.

Furthermore, no specific educational or technical skills are required to complete and submit the additional BE study reports. Trained and qualified employees of an establishment who are involved in normal operations generally complete similar activities. Also, FDA has reviewed related Federal rules and has not identified any rules that duplicate, overlap, or conflict with the final rule.

FDA has evaluated only two regulatory options: (1) Continuing the current practice of requiring the submission of only pivotal BE study results, or (2) requiring the submission of results from all BE studies conducted by an applicant on a final drug product formulation. Under the first option, firms will incur no additional reporting costs, although some firms might experience significant costs if their product was initially approved and subsequently recalled, or had approval withdrawn because the product is found not to be bioequivalent to the RLD. The agency believes that the second option, requiring that results from all BE studies conducted on the final drug product formulation be submitted for approval, is important for assessing bioequivalence. The final rule requires reporting of all BE studies, but also permits summary reports for BE studies other than those the applicant relies on for approval, except where full reports are specifically requested by the agency. The agency believes that the final rule therefore addresses the perceived regulatory need in the least intrusive and most cost effective way.

E. Benefits of the Final Rule

The final rule will generate economic benefits both for individuals and for society as a whole, to the extent that the reporting of data from all BE studies on the same drug product formulation as that submitted for approval prevents product discontinuation and adverse health effects. Also, the data from additional BE studies may provide valuable scientific information, thereby increasing the agency's understanding of bioequivalence and generic drug development issues, and improving the drug approval process. Therefore, this final rule will permit FDA to make more informed BE determinations in the future.

IX. Paperwork Reduction Act of 1995

This final rule contains information collection requirements that are subject to review by the Office of Management and Budget (OMB) under the Paperwork Reduction Act of 1995 (44 U.S.C. 3501–3520). The title, description, and respondent description of the information collection requirements are shown below with an estimate of the annual reporting burden. Included in this estimate is the time for reviewing instructions, searching existing data sources, gathering and maintaining the data needed, and completing and reviewing each collection of information.

Title: Requirements for Submission of Bioequivalence Data; Final Rule

Description: FDA is amending the requirements for certain ANDAs, ANDA amendments, and ANDA supplements submitted under §§ 314.94, 314.96, and 314.97. Specifically, FDA is amending §§ 314.94(a)(7)(i), 314.96(a)(1), and 320.21(b)(1), as well as modifying the requirements of § 320.21(c) (which refers to § 320.21(b)(1)), to require an ANDA applicant to submit information from all BE studies, both passing and nonpassing, conducted by the applicant on the same drug product formulation as that submitted for approval under an ANDA, amendment, or supplement.

In addition, FDA is announcing its intention to interpret § 314.94(a)(7)(ii) as requiring that ANDA applicants who submit ANDAs under a petition approved under § 314.93 submit information on all bioavailability or BE studies conducted on the same drug product formulation submitted for approval.

FDA is also clarifying through this rulemaking that it intends to interpret § 314.81(b)(2)(vi) as requiring the submission of postmarketing reports of all BE studies conducted or otherwise obtained by ANDA applicants in the applicant's annual report. However, FDA believes an applicant will rarely, if ever, conduct a postmarketing BE study, other than one required for an ANDA supplement.

Description of Respondents: Persons and businesses, including small businesses and manufacturers.

Burden Estimate: Table 2 of this document provides an estimate of the annual reporting burden under the rule.

The rule will affect establishments that submit ANDAs. FDA does not know the precise number of entities, either large or small, that will submit ANDAs in the future. In the year 2006, 177 applicants submitted 511 BE studies in 622 original ANDAs, amendments, and supplements. FDA estimates that this rule will result in a 10-percent increase in the number of BE studies submitted annually, or 51 (511 x 0.10) additional studies. This estimate is based on the assumptions that approximately 20 percent of all BE studies conducted produce results that do not meet bioequivalence limits, and that about half of these studies are conducted on formulations that are not submitted for approval.

FDA estimates it will require approximately 120 hours of staff time to prepare and submit each additional complete BE study report, and approximately 60 hours of staff time for each additional BE summary report. The agency believes that a complete report will be required approximately 20 percent of the time, while a summary will suffice approximately 80 percent of the time. Based on a weighted-average calculation using the information presented above, the submission of each additional BE study is expected to take 72 hours of staff time ([120 x 0.2] + [60 x 0.8]).

In table 2 of this document, FDA has estimated the reporting burden associated with each section of the rule. FDA believes that the vast majority of additional BE studies will be reported in ANDAs (submitted under § 314.94) rather than supplements (submitted under § 314.97), because it is unlikely that an ANDA holder will conduct BE studies with a drug after the drug has been approved. Moreover, drugs approved under an ANDA prior to the effective date of the final rule will only be required to report additional BE studies conducted after the effective date, which should not result in the submission of many BE study reports in supplements. With respect to the reporting of additional BE studies in amendments (submitted under § 314.96), this should also account for a small number of reports, because most BE studies will be conducted on a drug prior to the submission of the ANDA and will be reported in the ANDA itself.

TABLE 2.—ESTIMATED ANNUAL REPORTING BURDEN[1]

21 CFR Section	No. of Respondents	Annual Frequency per Response	Total Annual Responses	Hours per Response	Total Hours
314.94(a)(7)	49	1	49	72	3,528
314.96(a)(1)	1	1	1	72	72
314.97	1	1	1	72	72
Total					3,672

[1] There are no capital costs or operating and maintenance costs associated with this collection of information.

The information provisions of this final rule have been submitted to the Office of Management and Budget (OMB) for review, as required by section 3507(d) of the Paperwork Reduction Act of 1995. The requirements were approved and assigned OMB control number 0910–0630. This approval expires November 30, 2011. An agency may not conduct or sponsor, and a person is not required to respond to, a collection of information unless it displays a currently valid OMB control number.

X. Federalism

FDA has analyzed this final rule in accordance with the principles set forth in Executive Order 13132. FDA has determined that the rule does not contain policies that have substantial direct effects on the States, on the relationship between the National Government and the States, or on the distribution of power and responsibilities among the various levels of government. Accordingly, the agency has concluded that the rule does not contain policies that have federalism implications as defined in the Executive order and, consequently, a federalism summary impact statement is not required.

XI. References

The following references have been placed on display in the Division of Dockets Management (HFA–305), Food and Drug Administration, 5630 Fishers Lane, rm. 1061, Rockville, MD 20857, and may be seen by interested persons between 9 a.m. and 4 p.m., Monday through Friday. (FDA has verified the Web site addresses, but FDA is not responsible for any subsequent changes to the Web sites after this document publishes in the **Federal Register**.)

1. U.S. Department of Labor, Bureau of Labor Statistics, Table 11. Employer costs per hour worked for employee compensation and costs as a percent of total compensation: Private industry workers, by occupational group and full-time and part-time status, December 2006, Management, professional, and related series.

2. U.S. Small Business Administration, Office of Size Standards, Table of Size Standards, available online at *http://www.sba.gov/idc/groups/public/documents/sba_homepage/serv_sstd_tablepdf.pdf*.

3. National Institutes of Health, Office of Science Policy Analysis, Biomedical Research and Development Price Index (BRDPI), available online at *http://officeofbudget.od.nih.gov/PDF/BRDPI_2_5_07.pdf* (viewed April 20, 2007).

List of Subjects

21 CFR Part 314

Administrative practice and procedure, Confidential business information, Drugs, Reporting and recordkeeping requirements.

21 CFR Part 320

Drugs, Reporting and recordkeeping requirements.

■ Therefore, under the Federal Food, Drug, and Cosmetic Act and under authority delegated to the Commissioner of Food and Drugs, 21 CFR parts 314 and 320 are amended as follows:

PART 314—APPLICATIONS FOR FDA APPROVAL TO MARKET A NEW DRUG

■ 1. The authority citation for 21 CFR part 314 continues to read as follows:

Authority: 21 U.S.C. 321, 331, 351, 352, 353, 355, 356, 356a, 356b, 356c, 371, 374, 379e.

■ 2. Amend § 314.94 by revising paragraph (a)(7)(i) to read as follows:

§ 314.94 Content and format of an abbreviated application.

(a) * * *

(7) *Bioequivalence*. (i) Information that shows that the drug product is bioequivalent to the reference listed drug upon which the applicant relies. A complete study report must be submitted for the bioequivalence study upon which the applicant relies for approval. For all other bioequivalence studies conducted on the same drug product formulation as defined in § 320.1(g) of this chapter, the applicant must submit either a complete or summary report. If a summary report of a bioequivalence study is submitted and FDA determines that there may be bioequivalence issues or concerns with the product, FDA may require that the applicant submit a complete report of the bioequivalence study to FDA; or

* * * * *

■ 3. Amend § 314.96 by adding four sentences at the end of paragraph (a)(1) to read as follows:

§ 314.96 Amendments to an unapproved abbreviated application.

(a) * * *

(1) * * * Amendments containing bioequivalence studies must contain reports of all bioequivalence studies conducted by the applicant on the same drug product formulation, unless the information has previously been submitted to FDA in the abbreviated new drug application. A complete study report must be submitted for any bioequivalence study upon which the applicant relies for approval. For all other bioequivalence studies conducted on the same drug product formulation as defined in § 320.1(g) of this chapter, the applicant must submit either a complete or summary report. If a summary report of a bioequivalence study is submitted and FDA determines that there may be bioequivalence issues or concerns with the product, FDA may require that the applicant submit a complete report of the bioequivalence study to FDA.

* * * * *

PART 320—BIOAVAILABILITY AND BIOEQUIVALENCE REQUIREMENTS

■ 4. The authority citation for 21 CFR part 320 continues to read as follows:

Authority: 21 U.S.C. 321, 351, 352, 355, 371.

■ 5. Amend § 320.1 by adding paragraph (g) to read as follows:

§ 320.1 Definitions.

* * * * *

(g) *Same drug product formulation* means the formulation of the drug product submitted for approval and any formulations that have minor differences in composition or method of

manufacture from the formulation submitted for approval, but are similar enough to be relevant to the agency's determination of bioequivalence.

■ 6. Amend § 320.21 by revising the section heading and paragraph (b)(1) to read as follows:

§ 320.21 Requirements for submission of bioavailability and bioequivalence data.

* * * * *

(b) * * *

(1) Evidence demonstrating that the drug product that is the subject of the abbreviated new drug application is bioequivalent to the reference listed drug (defined in § 314.3(b) of this chapter). A complete study report must be submitted for the bioequivalence study upon which the applicant relies for approval. For all other bioequivalence studies conducted on the same drug product formulation, the applicant must submit either a complete or summary report. If a summary report of a bioequivalence study is submitted and FDA determines that there may be bioequivalence issues or concerns with the product, FDA may require that the applicant submit a complete report of the bioequivalence study to FDA; or

* * * * *

Dated: January 13, 2009.

Jeffrey Shuren,

Associate Commissioner for Policy and Planning.

[FR Doc. E9–884 Filed 1–15–09; 8:45 am]

BILLING CODE 4160–01–S

DEPARTMENT OF LABOR

Wage and Hour Division

29 CFR Parts 3 and 5

Protecting the Privacy of Workers: Labor Standards Provisions Applicable to Contracts Covering Federally Financed and Assisted Construction, Effectiveness of Information Collection Requirements

AGENCY: Department of Labor, Employment Standards Administration, Wage and Hour Division.

ACTION: OMB approval of information collection requirements.

SUMMARY: The Office of Management and Budget (OMB) has approved under the Paperwork Reduction Act (PRA) information collection requirements contained in recently revised final regulations published by the Department of Labor in the **Federal Register** on December 19, 2008. The PRA requires this notice to set forth the effectiveness of information collection requirements contained in a final rule.

DATES: The amendments to §§ 3.3(b) and 5.5(a)(3)(ii)(A) and (B)(1) published in the **Federal Register** on December 19, 2008 (73 FR 77504) have been approved by OMB and are effective January 18, 2009.

ADDRESSES: Written comments regarding the burden-hour estimates or other aspects of the information collection requirements contained in 29 CFR parts 3 and 5 may be submitted to: Administrator, Wage and Hour Division, Room S3502, 200 Constitution Avenue, NW., Washington DC 20210.

FOR FURTHER INFORMATION CONTACT: Richard M. Brennan, Director, Division of Interpretations and Regulatory Analysis, Wage and Hour Division, Employment Standards Administration, U.S. Department of Labor, Room S–3506, 200 Constitution Avenue, NW., Washington, DC 20210; telephone: (202) 693–0051.

Questions of interpretation and/or enforcement of regulations referenced in this notice may be directed to the nearest Wage and Hour Division (WHD) District Office. Locate the nearest office by calling the WHD toll-free help line at (866) 4US–WAGE ((866) 487–9243) between 8 a.m. and 5 p.m. in your local time zone, or log onto the WHD's Web site for a nationwide listing of WHD District and Area Offices at: *http://www.dol.gov/esa/whd/america2.htm*.

This notice is available through the printed **Federal Register** and electronically via the *http://www.gpoaccess.gov/fr/index.html* Web site.

Copies of this notice may be obtained in alternative formats (Large Print, Braille, Audio Tape or Disc), upon request, by calling (202) 693–0023. TTY/TDD callers may dial toll-free (877) 889–5627 to obtain information or request materials in alternative formats.

SUPPLEMENTARY INFORMATION: On December 30, 2008, the Office of Management and Budget (OMB) approved under the PRA the Department of Labor's information collection request for requirements in 29 CFR 5.5(a)(3)(ii)(A), and 5.5(a)(3)(ii)(B)(1), as published in the **Federal Register** on December 19, 2008. See 73 FR 77504. The current expiration date for OMB authorization for this information collection is December 31, 2011. The regulations implement Davis-Bacon and Related Acts and the Copeland Anti-Kickback Act requirements, and the regulatory changes reduce respondent burden and improve privacy protections for laborers and mechanics employed on federally financed or assisted construction contracts by lessening the transmission of personal information regarding individuals who work on contracts subject to Davis-Bacon Act labor standards. The preamble to the new regulations stated a general effective date of January 18, 2009; however, the OMB had not yet provided a PRA-required approval for the revised information collection requirements contained in 29 CFR 3.3, 5.5(a)(3)(ii)(A), and 5.5(a)(3)(ii)(B)(1) at the time of their publication. 44 U.S.C. 3507(a)(2). An agency may not conduct an information collection unless it has a currently valid OMB approval; therefore, in accordance with the PRA, the effective date of the information collection requirements in the revised regulations was delayed until the OMB approved them under the PRA. 44 U.S.C. 3506(c)(1)(B)(iii)(V). On December 30, 2008, the OMB approved the Department's information collection request under Control Number 1215–0149; thus, giving effect to the requirements, as announced and published in the **Federal Register** on December 18, 2008, under the PRA. The current expiration date for OMB authorization for this information collection is December 31, 2011.

Dated: January 9, 2009.

Victoria A. Lipnic,

Assistant Secretary, Employment Standards Administration.

Alexander J. Passantino,

Acting Administrator, Wage and Hour Division.

[FR Doc. E9–675 Filed 1–15–09; 8:45 am]

BILLING CODE 4510–27–P

DEPARTMENT OF LABOR

Wage and Hour Division

29 CFR Part 825

The Family and Medical Leave Act of 1993, Effectiveness of Information Collection Requirements

AGENCY: Department of Labor, Employment Standards Administration, Wage and Hour Division.

ACTION: OMB approval of information collection requirements.

SUMMARY: On December 14, 2008, the Office of Management and Budget (OMB) approved under the Paperwork Reduction Act (PRA) the Department of Labor's information collection request for requirements regarding Family and Medical Leave Act regulations, as published in the **Federal Register** on November 17, 2008. The PRA requires this notice to set forth the effectiveness

of information collection requirements contained in a final rule.

DATES: The final rule published in the **Federal Register** on November 17, 2008 (73 FR 67934) has been approved by OMB and is effective January 16, 2009. The current expiration date for OMB authorization for this information collection is December 31, 2011.

ADDRESSES: Written comments regarding the burden-hour estimates or other aspects of the information collection requirements contained in 29 CFR part 825 may be submitted to: Administrator, Wage and Hour Division, Room S3502, 200 Constitution Avenue, NW., Washington DC 20210.

FOR FURTHER INFORMATION CONTACT: Richard M. Brennan, Director, Division of Interpretations and Regulatory Analysis, Wage and Hour Division, Employment Standards Administration, U.S. Department of Labor, Room S–3506, 200 Constitution Avenue, NW., Washington, DC 20210; telephone: (202) 693–0051 (this is not a toll-free number).

Questions of interpretation and/or enforcement of regulations referenced in this notice may be directed to the nearest Wage and Hour Division (WHD) District Office. Locate the nearest office by calling the WHD toll-free help line at (866) 4US–WAGE ((866) 487–9243) between 8 a.m. and 5 p.m. in your local time zone, or log onto the WHD's Web site for a nationwide listing of WHD District and Area Offices at: *http://www.dol.gov/esa/whd/america2.htm.*

This notice is available through the printed **Federal Register** and electronically via the *http://www.gpoaccess.gov/fr/index.html* Web site.

Copies of this notice may be obtained in alternative formats (Large Print, Braille, Audio Tape or Disc), upon request, by calling (202) 693–0023 (not a toll-free number). TTY/TDD callers may dial toll-free (877) 889–5627 to obtain information or request materials in alternative formats.

SUPPLEMENTARY INFORMATION: The Office of Management and Budget (OMB) has approved under the PRA information collection requirements contained in recently revised final regulations under the Family and Medical Leave Act published by the Department of Labor in the **Federal Register** on November 17, 2008. See 73 FR 67934. The preamble to the new regulations stated an effective date of January 18, 2009; however, the OMB had not yet provided a PRA-required approval for the revised information collection requirements contained in the revised FMLA rules at the time of their publication. 44 U.S.C. 3507(a)(2). An agency may not conduct an information collection unless it has a currently valid OMB approval; therefore, in accordance with the PRA, the effective date of the information collection requirements in the revised regulations was delayed until the OMB approved them under the PRA. 44 U.S.C. 3506(c)(1)(B)(iii)(V). On December 14, 2008, the OMB approved the Department's information collection request under Control Number 1215–0181; thus, giving effect to the requirements, as announced and published in the **Federal Register** on November 17, 2008, under the PRA. The current expiration date for OMB authorization for this information collection is December 31, 2011.

Dated: January 9, 2009.

Victoria A. Lipnic,

Assistant Secretary, Employment Standards Administration.

Alexander J. Passantino,

Acting Administrator, Wage and Hour Division.

[FR Doc. E9–674 Filed 1–15–09; 8:45 am]

BILLING CODE 4510–27–P

PENSION BENEFIT GUARANTY CORPORATION

29 CFR Part 4022

Benefits Payable in Terminated Single-Employer Plans; Interest Assumptions for Valuing and Paying Benefits

AGENCY: Pension Benefit Guaranty Corporation.

ACTION: Final rule.

SUMMARY: Pension Benefit Guaranty Corporation's regulation on Benefits Payable in Terminated Single-Employer Plans prescribes interest assumptions for valuing and paying certain benefits under terminating single-employer plans. This final rule amends the benefit payments regulation to adopt interest assumptions for plans with valuation dates in February 2009. As discussed below, this final rule does not address the interest assumptions under PBGC's regulation on Allocation of Assets in Single-Employer Plans. Interest assumptions are also published on PBGC's Web site (*http://www.pbgc.gov*).

DATES: Effective February 1, 2009.

FOR FURTHER INFORMATION CONTACT: Catherine B. Klion, Manager, Regulatory and Policy Division, Legislative and Regulatory Department, Pension Benefit Guaranty Corporation, 1200 K Street, NW., Washington, DC 20005, 202–326–4024. (TTY/TDD users may call the Federal relay service toll-free at 1–800–877–8339 and ask to be connected to 202–326–4024.)

SUPPLEMENTARY INFORMATION: PBGC's regulations prescribe actuarial assumptions—including interest assumptions—for valuing and paying plan benefits of terminating single-employer plans covered by title IV of the Employee Retirement Income Security Act of 1974. The interest assumptions are intended to reflect current conditions in the financial and annuity markets.

These interest assumptions are found in two PBGC regulations: the regulation on Benefits Payable in Terminated Single-Employer Plans (29 CFR Part 4022) and the regulation on Allocation of Assets in Single-Employer Plans (29 CFR Part 4044). Before 2009, PBGC updated the assumptions under the two regulations each month in a single rulemaking document. In a final rule published in the **Federal Register** on December 29, 2008 (at 73 FR 79362), PBGC announced a change in its practice for determining the interest assumptions for use under the asset allocation regulation. As explained in the preamble to that final rule (73 FR 79362 at 79363), the new practice leads to assumptions that remain unchanged within a calendar quarter. Accordingly, the assumptions published December 29, 2008, remain in effect for January, February, and March 2009, and need not be updated for February 2009. Thus this final rule document updates the benefit payments regulation only. Similarly, future updates to the asset allocation regulation will be made quarterly rather than monthly; between quarterly updates of the asset allocation regulation, only the benefit payment regulation will be updated each month.

Two sets of interest assumptions are prescribed under the benefit payments regulation: (1) A set for PBGC to use to determine whether a benefit is payable as a lump sum and to determine lump-sum amounts to be paid by PBGC (found in Appendix B to Part 4022), and (2) a set for private-sector pension practitioners to refer to if they wish to use lump-sum interest rates determined using PBGC's historical methodology (found in Appendix C to Part 4022).

This amendment (1) adds to Appendix B to Part 4022 the interest assumptions for PBGC to use for its own lump-sum payments in plans with valuation dates during February 2009, and (2) adds to Appendix C to Part 4022 the interest assumptions for private-sector pension practitioners to refer to if they wish to use lump-sum interest rates determined using PBGC's historical

methodology for valuation dates during February 2009.

The interest assumptions that PBGC will use for its own lump-sum payments (set forth in Appendix B to part 4022) will be 3.00 percent for the period during which a benefit is in pay status and 4.00 percent during any years preceding the benefit's placement in pay status. These interest assumptions represent a decrease (from those in effect for January 2009) of 1.00 percent in the immediate annuity rate and are otherwise unchanged. For private-sector payments, the interest assumptions (set forth in Appendix C to part 4022) will be the same as those used by PBGC for determining and paying lump sums (set forth in Appendix B to part 4022).

PBGC has determined that notice and public comment on this amendment are impracticable and contrary to the public interest. This finding is based on the need to determine and issue new interest assumptions promptly so that the assumptions can reflect current market conditions as accurately as possible.

Because of the need to provide immediate guidance for the valuation and payment of benefits in plans with valuation dates during February 2009, PBGC finds that good cause exists for making the assumptions set forth in this amendment effective less than 30 days after publication.

PBGC has determined that this action is not a ''significant regulatory action'' under the criteria set forth in Executive Order 12866.

Because no general notice of proposed rulemaking is required for this amendment, the Regulatory Flexibility Act of 1980 does not apply. See 5 U.S.C. 601(2).

List of Subjects in 29 CFR Part 4022

Employee benefit plans, Pension insurance, Pensions, Reporting and recordkeeping requirements.

■ In consideration of the foregoing, 29 CFR part 4022 is amended as follows:

PART 4022—BENEFITS PAYABLE IN TERMINATED SINGLE-EMPLOYER PLANS

■ 1. The authority citation for part 4022 continues to read as follows:

Authority: 29 U.S.C. 1302, 1322, 1322b, 1341(c)(3)(D), and 1344.

■ 2. In appendix B to part 4022, Rate Set 184, as set forth below, is added to the table.

Appendix B to Part 4022—Lump Sum Interest Rates For PBGC Payments

* * * * *

Rate set	For plans with a valuation date		Immediate annuity rate (percent)	Deferred annuities (percent)				
	On or after	Before		i_1	i_2	i_3	n_1	n_2
*	*		*	*	*	*		*
184	2–1–09	3–1–09	3.00	4.00	4.00	4.00	7	8

■ 3. In appendix C to part 4022, Rate Set 184, as set forth below, is added to the table.

Appendix C to Part 4022—Lump Sum Interest Rates For Private-Sector Payments

* * * * *

Rate set	For plans with a valuation date		Immediate annuity rate (percent)	Deferred annuities (percent)				
	On or after	Before		i_1	i_2	i_3	n_1	n_2
*	*		*	*	*	*		*
184	2–1–09	3–1–09	3.00	4.00	4.00	4.00	7	8

Issued in Washington, DC, on this 12th day of January 2009.

Vincent K. Snowbarger,

Deputy Director for Operations, Pension Benefit Guaranty Corporation.

[FR Doc. E9–832 Filed 1–15–09; 8:45 am]

BILLING CODE 7709–01–P

DEPARTMENT OF DEFENSE

Office of the Secretary

32 CFR Part 160

[DoD Instruction 5000.35]

Defense Acquisition Regulations (DAR) System

AGENCY: Department of Defense.

ACTION: Final rule.

SUMMARY: This final rule removes the DoD's rule concerning the management and operation of the Defense Acquisition Regulations (DAR) System. The part has served the purpose for which it was intended for the Code of Federal Regulations, and is no longer necessary.

DATES: *Effective Date:* January 16, 2009.

FOR FURTHER INFORMATION CONTACT: Ms. Patricia L. Toppings at 703–696–5284.

SUPPLEMENTARY INFORMATION: A copy of the current DoD Instruction may be obtained from *http://www.dtic.mil/whs/directives/corres/pdf/500035p.pdf.*

List of Subjects in 32 CFR Part 160

Armed forces; government procurement.

PART 160—[REMOVED]

■ Accordingly, by the authority of 10 U.S.C. 301, 32 CFR part 160 is removed.

Dated: January 12, 2009.

Patricia L. Toppings,

OSD Federal Register Liaison Officer, Department of Defense.

[FR Doc. E9–877 Filed 1–15–09; 8:45 am]

BILLING CODE 5001–06–P

DEPARTMENT OF HOMELAND SECURITY

Coast Guard

33 CFR Part 125

[USCG–2006–24189]

Maritime Identification Credentials

AGENCY: Coast Guard, DHS.

ACTION: Notice of acceptable identification credentials; phased cancellation.

SUMMARY: This document informs the public that, after their Captain of the Port (COTP) has implemented access control procedures using the Transportation Worker Identification Credential (TWIC), the COTP no longer needs to enforce the previously published notice requiring name-based vetting of certain port workers.

DATES: This announcement is effective January 16, 2009.

ADDRESSES: Documents indicated in this preamble as being available in the docket are part of docket USCG–2006–24189 and are available for inspection or copying at the Docket Management Facility, U.S. Department of Transportation, West Building, Ground Floor, Room W12–140, 1200 New Jersey Avenue, SE., Washington, DC 20590–0001 between 9 a.m. and 5 p.m., Monday through Friday, except Federal holidays. They may also be viewed online at *www.regulations.gov* at any time.

FOR FURTHER INFORMATION CONTACT: If you have questions on this document, call James Bull, Coast Guard, telephone 202–372–1144. If you have questions on viewing material in the docket, call Renee V. Wright, Program Manager, Docket Operations, telephone 202–366–9826.

SUPPLEMENTARY INFORMATION:

Background and Purpose

Under the authority of 50 U.S.C. 191 and Coast Guard regulations (33 CFR part 125), the Coast Guard has the authority to require identification credentials for access to waterfront facilities and to port and harbor areas, including vessels and harbor craft in those areas. The Commandant of the Coast Guard, pursuant to 33 CFR 125.15(a), is authorized to direct, from time to time, the Captains of the Port ''to prevent access of persons who do not possess one or more of the identification credentials listed in § 125.09 to those waterfront facilities, and port and harbor areas, including vessels and harbor craft therein, where the following shipping activities are conducted: * * * [t]hose essential to the interests of national security and defense, to prevent loss, damage or injury, or to insure the observance of rights and obligations of the United States.''

On April 28, 2006, the Coast Guard published a ''Notice of acceptable identification credentials'' in the **Federal Register** at 71 FR 25066 (''April 28, 2006 Notice''), which directed the COTPs to deny access to waterfront facilities regulated under 33 CFR part 105 to persons that did not have appropriate identification credentials, as defined by 33 CFR 125.09. This action was deemed necessary in the interests of national security and to protect these facilities from loss, damage, or injury. The appropriate credentials included a Merchant Mariner Document, an Armed Forces Identification Card, Federal law enforcement credentials, identification credentials issued to public safety officers, and other credentials defined in the April 28, 2006 Notice in accordance with 33 CFR 125.09(g).

The April 28, 2006 Notice set out a procedure by which the Transportation Security Administration (TSA) analyzed relevant information, submitted by the facility owner or operator either directly to TSA or via the Coast Guard, before determining whether or not an employee or longshoreman posed or was suspected of posing a security threat warranting denial of access to the port facility. This information included the employee's or longshoreman's legal name, date of birth, social security number (optional), and alien identification number (if applicable). TSA notified the facility and the COTP of persons that posed or were suspected of posing a security threat, and those persons were denied access to facilities regulated under 33 CFR part 105, as not having approved identification credentials under 33 CFR 125.09(f).

Facility Access Under TWIC

The April 28, 2006 Notice stated that ''when regulations implementing the Transportation Worker Identification Credential (TWIC) are issued, the Coast Guard will reevaluate this action.'' (71 FR 25066). The Final Rule implementing TWIC was published in the **Federal Register** on January 25, 2007 (72 FR 3492). TWIC enrollment began in October of 2007 (72 FR 57342); there are now 149 enrollment centers open. On May 7, 2008, the Coast Guard and TSA issued a final rule extending the TWIC compliance date. (73 FR 25562). All persons required to obtain a TWIC, and all vessels and facilities required to use a TWIC as an access control measure, must comply by April 15, 2009, unless the Coast Guard issues an earlier compliance date.

On May 7, 2008, the Coast Guard began announcing earlier rolling compliance dates for facilities, as provided in 33 CFR 105.115(e). (73 FR 25757). Those compliance dates, in order of occurrence and by COTP Zone, are listed in Table 1, below.

Cancellation of Procedure Established by April 28, 2006 Notice

The procedure established in the April 28, 2006 Notice was intended to be an interim measure that would be reevaluated once the TWIC program was operational. As part of this procedure, TSA conducted a name-based security threat assessment on more than 800,000 workers. This number far exceeds the population estimates we had when the April 28, 2006 Notice was published, and has enhanced security in the nation's maritime sector. However, the security threat assessment TSA is now able to conduct through the TWIC program is more robust. Also, the TWIC enrollment process, which includes comprehensive identification verification standards and more detailed information provided by the worker, produces more complete information on which to base a security threat assessment. Thus, the results of the TWIC threat assessments are more accurate than the name-based check run under the April 28, 2006 Notice.

As a result of the above, the Coast Guard has determined that, once TWIC has been implemented in a COTP Zone (according to the date announced in the **Federal Register** and reflected in Table 1), the personal identification requirements implemented by the April 28, 2006 Notice are no longer necessary.

TABLE 1—DATES OF TWIC COMPLIANCE AND CANCELLATION OF TSA NAME–BASED VETTING

If you are in COTP zone . . .	Then your TWIC Compliance date (and the date when you may stop using the procedure from the April 28, 2006 Notice) is . . .
Boston, Northern New England, Southeastern New England	October 15, 2008 (Notice published at 73 FR 25757).
Cape Fear River, Corpus Christi, North Carolina	November 28, 2008 (Notice published at 73 FR 40739).

TABLE 1—DATES OF TWIC COMPLIANCE AND CANCELLATION OF TSA NAME–BASED VETTING—Continued

If you are in COTP zone . . .	Then your TWIC Compliance date (and the date when you may stop using the procedure from the April 28, 2006 Notice) is . . .
Buffalo, Detroit, Duluth, Lake Michigan, Sault St. Marie	December 1, 2008 (The original Notice, published at 73 FR 39323, set a compliance date of October 31, 2008. A new Notice, published at 73 FR 64208, delayed compliance until December 1, 2008).
Charleston, Long Island Sound, Jacksonville, Savannah	December 1, 2008 (Notice published at 73 FR 44653).
Baltimore, Delaware Bay, Mobile, Lower Mississippi River, Ohio Valley, Pittsburgh, San Diego.	December 30, 2008 (Notice published at 73 FR 50721).
Hampton Roads, Morgan City, New Orleans, Upper Mississippi River, Miami, Key West, St. Petersburg.	January 13, 2009 (Notice published at 73 FR 52924).
Honolulu, Prince William Sound, Southeast Alaska, Western Alaska	February 12, 2009 (Notice published at 73 FR 56730).
Portland, Puget Sound, San Francisco Bay	February 28, 2009 (Notice published at 73 FR 60951).
New York	March 23, 2009 (Notice published at 73 FR 60951).
Guam, Houston-Galveston , Los Angeles-Long Beach, San Juan	April 14, 2009 (Notice published at 73 FR 63377).
Port Arthur	April 14, 2009 (The original Notice, published at 73 FR 40739, set a compliance date of October 31, 2008. A new Notice, published at 73 FR 64208, delayed compliance until April 14, 2009).

As of the above-listed effective date of TWIC compliance in each COTP zone, the Coast Guard is rescinding its previous direction to COTPs to prevent access to all facilities regulated under 33 CFR part 125 to persons who do not have an identification credential listed in 33 CFR 125.09, as amended by the April 28, 2006 Notice. Once they have implemented access control procedures utilizing TWIC, owners and operators of these facilities, and unions, may cease the transmission of information on employees and longshoremen (respectively) to TSA. Unless further notice appears in the **Federal Register**, by April 14, 2009, all transmissions of information under the April 28, 2006 Notice should cease.

Dated: January 12, 2009.

James A. Watson,

Rear Admiral, U.S. Coast Guard, Director of Prevention Policy.

[FR Doc. E9–847 Filed 1–15–09; 8:45 am]

BILLING CODE 4910–15–P

POSTAL SERVICE

39 CFR Part 111

New Automation Requirements for Detached Addressed Labels

AGENCY: Postal Service™.

ACTION: Final rule.

SUMMARY: To make Detached Address Labels (DALs) accompanying saturation mailings of Periodicals or Standard Mail® flats more compatible with our processing equipment, they must be automation-compatible and have a correct delivery point POSTNET(tm) barcode or Intelligent Mail® barcode with an 11-digit routing code. This requirement does not apply to DALs with simplified addresses. Also, for consistency, we are requiring return addresses on DALs.

DATES: *Effective Date:* March 2, 2009.

FOR FURTHER INFORMATION CONTACT: Monica Grein at 202–268–8411.

SUPPLEMENTARY INFORMATION: On August 27, 2008, we published a proposed rule in the **Federal Register** (Volume 73, Number 167, pages 50584–50585), requiring DALs to be automation-compatible and bear a delivery point barcode when used with saturation mailings of Periodicals or Standard Mail flats.

Except for DALs prepared with simplified addresses, all DALs accompanying saturation mailings of Periodicals or Standard Mail flats must be automation-compatible and have a correct delivery point POSTNET barcode or Intelligent Mail barcode with an 11-digit routing code. Automation-compatible and barcoded DALs may be processed in a manner that is more consistent with today's operating environment.

We suggest that mailers work with the local Postal Service mailpiece design analyst (MDA) to ensure that all DALs accompanying saturation mailings of Periodicals or Standard Mail flats meet the new standards. Saturation flats mailings presented with DALs that are not automation-compatible and barcoded will not qualify for saturation prices but may be entered at the basic carrier route price for Periodicals mailings or the basic Enhanced Carrier Route price for Standard Mail mailings.

We received comments from five respondents on the proposal: two from a mailer association, two from mailers that use DALs, and one from a USPS® postmaster.

Comments

One commenter suggested that to reduce costs further we should eliminate the use of DALs altogether, or also apply the automation requirements to DALs prepared with simplified addresses. Eliminating the use of DALs or requiring saturation mailers to physically apply addresses directly on each mailpiece may cause undue hardship for some mailers. We determined that such a requirement would be difficult for small local mailers sending saturation mailings to rural or highway contract routes and perhaps cause them to stop using the mail. We concluded that these additional changes were not in the best interest of the Postal Service or our customers.

One commenter requested DALs be allowed for Periodicals and Standard Mail ECR high-density mailings. This request is outside the scope of this rule.

One commenter expressed concern about the added cost of preparing an automation-compatible DAL. We considered the implications for our customers, and note that the use of DALs is an option in most instances. We continue to encourage customers to move to on-piece addressing rather than use DALs. Incidentally, on June 7, 2007, at the request of many mailers, we revised our standards to allow advertising on the front of DALs, provided that the DALs were barcoded and automation-compatible (see *Postal Bulletin* 22208 and DMM(r) 602.4.2.5.b). This change provided mailers with the ability to offset the DAL surcharge, implemented in May 2007, with new opportunities for advertising revenue.

One commenter requested we extend the use of simplified addresses to city route deliveries. This request is outside the scope of this final rule.

One commenter expressed concerns about continuing to enter DALs at destination delivery units (DDUs) while remaining eligible for DDU prices for

flats. Although DALS are letter-size, they are allowed to be entered at DDUs when they accompany either flats or parcels. This final rule does not propose to change the current standards that allow the DALs to be dropped at the DDU and does not change price eligibility for flats.

The Postal Service adopts the following changes to *Mailing Standards of the United States Postal Service,* Domestic Mail Manual (DMM), which is incorporated by reference in the *Code of Federal Regulations.* See 39 CFR 111.1.

List of Subjects in 39 CFR Part 111

Administrative practice and procedure, Postal Service.

■ Accordingly, 39 CFR 111 is amended as follows:

PART 111—[AMENDED]

■ 1. The authority citation for 39 CFR Part 111 continues to read as follows:

Authority: 5 U.S.C. 552(a); 39 U.S.C. 101, 401, 403, 404, 414, 416, 3001–3011, 3201–3219, 3403–3406, 3621, 3622, 3626, 3632, 3633, and 5001.

2. Revise the following sections of *Mailing Standards of the United States Postal Service,* Domestic Mail Manual (DMM), as follows:

* * * * *

600 Basic Standards for All Mailing Services

* * * * *

602 Addressing

1.0 Elements of Addressing

* * * * *

1.5 Return Addresses

* * * * *

1.5.3 Required Use of Return Addresses

The sender's domestic return address must appear legibly on:

* * * * *

[Revise text of 1.5.3 to add new item m as follows:]

m. Detached addressed labels (DALs).

* * * * *

4.0 Detached Address Labels (DALs)

4.1 DAL Use

* * * * *

4.1.2 Periodicals or Standard Mail Flats Saturation Mailings

[Revise text of 4.1.2 to require that DALs accompanying saturation mailings of Periodicals or Standard Mail flats be automation-compatible as follows:]

Saturation mailings of unaddressed Periodicals or Standard Mail flats may be mailed with detached address labels (DALs). DALs accompanying saturation mailings of Periodicals or Standard Mail flats must be automation-compatible under 201.3.0. This standard does not apply to DALs with simplified addressing. For this standard, saturation mailing means a mailing sent to at least 75% of the total addresses on a carrier route or 90% of the residential addresses on a route, whichever is less. Deliveries are not required to every carrier route of a delivery unit. Saturation flats mailings presented with DALs that are not automation-compatible and barcoded do not qualify for saturation prices but may be entered at the basic carrier route price for Periodicals mailings or the basic Enhanced Carrier Route price for Standard Mail mailings.

* * * * *

4.2 Label Preparation

4.2.1 Label Construction

Each DAL must be made of paper or cardboard stock that is not folded, perforated, or creased, and that meets these measurements:

[Revise text of 4.2.1 to modify item c and add new item d and new item e as follows:]

* * * * *

c. At least .007 inch thick except under 4.2.1.d.

d. If more than 4¼ inches high or more than 6 inches long, must be at least 0.009 inch thick.

e. Must have an aspect ratio (length divided by height) from 1.3 to 2.5, inclusive.

4.2.2 Addressing

[Revise text of 4.2.2 by deleting the current last sentence in its entirety and adding a new last sentence to require a POSTNET or Intelligent Mail barcode with a delivery point routing code as follows:]

* * * In addition, if DALs accompany saturation mailings of Periodicals or Standard Mail flats, a correct delivery point POSTNET barcode or Intelligent Mail barcode with an 11-digit routing code must be included (see 708.4) except when using a simplified address.

* * * * *

Neva R. Watson,

Attorney, Legislative.

[FR Doc. E9–859 Filed 1–15–09; 8:45 am]

BILLING CODE 7710–12–P

ENVIRONMENTAL PROTECTION AGENCY

40 CFR Part 180

[EPA–HQ–OPP–2008–0261; FRL–8397–9]

Emamectin; Pesticide Tolerances

AGENCY: Environmental Protection Agency (EPA).

ACTION: Final rule.

SUMMARY: This regulation establishes tolerances for combined residues of emamectin and its metabolites in or on tree nuts (crop group 14) and pistachios. Syngenta Crop Protection, Inc. requested these tolerances under the Federal Food, Drug, and Cosmetic Act (FFDCA). This regulation also makes a technical correction reinstating hog tolerances that were inadvertently omitted from the previous rule.

DATES: This regulation is effective January 16, 2009. Objections and requests for hearings must be received on or before March 17, 2009, and must be filed in accordance with the instructions provided in 40 CFR part 178 (see also Unit I.C. of the **SUPPLEMENTARY INFORMATION**).

ADDRESSES: EPA has established a docket for this action under docket identification (ID) number EPA–HQ–OPP–2008–0261. All documents in the docket are listed in the docket index available at *http://www.regulations.gov*. Although listed in the index, some information is not publicly available, e.g., Confidential Business Information (CBI) or other information whose disclosure is restricted by statute. Certain other material, such as copyrighted material, is not placed on the Internet and will be publicly available only in hard copy form. Publicly available docket materials are available in the electronic docket at *http://www.regulations.gov*, or, if only available in hard copy, at the OPP Regulatory Public Docket in Rm. S–4400, One Potomac Yard (South Bldg.), 2777 S. Crystal Dr., Arlington, VA. The Docket Facility is open from 8:30 a.m. to 4 p.m., Monday through Friday, excluding legal holidays. The Docket Facility telephone number is (703) 305–5805.

FOR FURTHER INFORMATION CONTACT: Thomas C. Harris, Registration Division (7505P), Office of Pesticide Programs, Environmental Protection Agency, 1200 Pennsylvania Ave., NW., Washington, DC 20460–0001; telephone number: (703) 308–9423; e-mail address: *harris.thomas@epa.gov*.

SUPPLEMENTARY INFORMATION:

I. General Information

A. Does this Action Apply to Me?

You may be potentially affected by this action if you are an agricultural producer, food manufacturer, or pesticide manufacturer. Potentially affected entities may include, but are not limited to those engaged in the following activities:

- Crop production (NAICS code 111).
- Animal production (NAICS code 112).
- Food manufacturing (NAICS code 311).
- Pesticide manufacturing (NAICS code 32532).

This listing is not intended to be exhaustive, but rather to provide a guide for readers regarding entities likely to be affected by this action. Other types of entities not listed in this unit could also be affected. The North American Industrial Classification System (NAICS) codes have been provided to assist you and others in determining whether this action might apply to certain entities. If you have any questions regarding the applicability of this action to a particular entity, consult the person listed under **FOR FURTHER INFORMATION CONTACT**.

B. How Can I Access Electronic Copies of this Document?

In addition to accessing electronically available documents at *http://www.regulations.gov*, you may access this **Federal Register** document electronically through the EPA Internet under the ''**Federal Register**'' listings at *http://www.epa.gov/fedrgstr*. You may also access a frequently updated electronic version of EPA's tolerance regulations at 40 CFR part 180 through the Government Printing Office's e-CFR cite at *http://www.gpoaccess.gov/ecfr*. To access the OPPTS Harmonized Guidelines referenced in this document, go directly to the guidelines at *http://www.epa.gpo/opptsfrs/home/guidelin.htm*.

C. Can I File an Objection or Hearing Request?

Under section 408(g) of FFDCA, 21 U.S.C. 346a, any person may file an objection to any aspect of this regulation and may also request a hearing on those objections. You must file your objection or request a hearing on this regulation in accordance with the instructions provided in 40 CFR part 178. To ensure proper receipt by EPA, you must identify docket ID number EPA–HQ–OPP–2008–0261 in the subject line on the first page of your submission. All requests must be in writing, and must be mailed or delivered to the Hearing Clerk as required by 40 CFR part 178 on or before March 17, 2009.

In addition to filing an objection or hearing request with the Hearing Clerk as described in 40 CFR part 178, please submit a copy of the filing that does not contain any CBI for inclusion in the public docket that is described in **ADDRESSES**. Information not marked confidential pursuant to 40 CFR part 2 may be disclosed publicly by EPA without prior notice. Submit this copy, identified by docket ID number EPA–HQ–OPP–2008–0261, by one of the following methods:

- *Federal eRulemaking Portal*: *http://www.regulations.gov*. Follow the on-line instructions for submitting comments.
- *Mail*: Office of Pesticide Programs (OPP) Regulatory Public Docket (7502P), Environmental Protection Agency, 1200 Pennsylvania Ave., NW., Washington, DC 20460–0001.
- *Delivery*: OPP Regulatory Public Docket (7502P), Environmental Protection Agency, Rm. S–4400, One Potomac Yard (South Bldg.), 2777 S. Crystal Dr., Arlington, VA. Deliveries are only accepted during the Docket Facility's normal hours of operation (8:30 a.m. to 4 p.m., Monday through Friday, excluding legal holidays). Special arrangements should be made for deliveries of boxed information. The Docket Facility telephone number is (703) 305–5805.

II. Petition for Tolerance

In the **Federal Register** of May 16, 2008 (73 FR 28461) (FRL–8361–6), EPA issued a notice pursuant to section 408(d)(3) of FFDCA, 21 U.S.C. 346a(d)(3), announcing the filing of a pesticide petition (PP 7F7263) by Syngenta Crop Protection, Inc., PO Box 18300, Greensboro, NC 27419–8300. The petition requested that 40 CFR 180.505 be amended by establishing tolerances for combined residues of the insecticide emamectin, 4′-epi-methylamino- 4′-deoxyavermectin B1 benzoate (a mixture of a minimum of 90% 4′-epi-methylamino-4′-deoxyavermectin B_{1a} and a maximum of 10% 4′-epi-methlyamino-4′-deoxyavermectin B_{1b}), and its metabolites 8,9 isomer of the B_{1a} and B_{1b} component of the parent insecticide, in or on the food commodities tree nuts (crop group 14) and pistachios at 0.02 parts per million (ppm); and almond hulls at 0.25 ppm. That notice referenced a summary of the petition prepared by Syngenta Crop Protection, Inc., the registrant, which is available to the public in the docket, *http://www.regulations.gov*. There were no comments received in response to the notice of filing.

Based upon EPA review of the data supporting the petition, the petition was subsequently revised to establish permanent tolerances for the combined residues of emamectin (a mixture of a minimum of 90% 4′-epi-methylamino-4′-deoxyavermectin B_{1a} and maximum of 10% 4′-epi-methylamino-4′-deoxyavermectin B_{1b}) and its metabolites 8,9-isomer of the B_{1a} and B_{1b} component of the parent (8,9–ZMA), or 4′-deoxy-4′-epi-amino-avermectin B_{1a} and 4′-deoxy-4′-epi-amino-avermectin B_{1b}; 4′-deoxy-4′-epi-amino-avermectin B_{1a} (AB_{1a}); 4′-deoxy-4′-epi-(*N*-formyl-*N*-methyl)amino-avermectin (MFB_{1a}); and 4′-deoxy-4′-epi-(*N*-formyl)amino-avermectin B_{1a} (FAB_{1a}) in/on almond, hulls at 0.20 ppm; nut, tree, group 14 at 0.02 ppm; and pistachio at 0.02 ppm. The reason for these changes are explained in Unit IV.D.

In addition, with this final rule EPA is also making a technical correction to restate existing permanent tolerances on hogs (fat, liver, meat, and meat byproducts) which were inadvertently omitted in the final rule for pome fruit published on April 12, 2006 in (71 FR 18642) (FRL–7765–4). Due to the consumption of apple pomace, that final rule altered the tolerances for most livestock but not for hogs (except to delete hog, milk as noted below). While the new livestock tolerances were listed, the tolerances for hogs, fat, liver, meat, and meat byproducts were inadvertently omitted. Hog tolerances were considered in this risk analysis for tree nuts and pistachios. Permanent tolerances continue to exist as stated in the final rule published on July 9, 2003 in (68 FR 40791) (FRL–7316–6) for emamectin (MAB_{1a} + MAB_{1b}) and the 8,9–Z isomers (8,9–ZB_{1a} and 8,9–ZB_{1b} in hog, fat at 0.003 ppm; hog, liver at 0.020 ppm; hog, meat at 0.002 ppm; and hog, meat byproducts (except liver) at 0.005 ppm. Note: As stated in the April 12, 2006 final rule, the tolerance for hog, milk was deleted along with other livestock-specific milk and replaced by a tolerance for simply ''milk.''

III. Aggregate Risk Assessment and Determination of Safety

Section 408(b)(2)(A)(i) of FFDCA allows EPA to establish a tolerance (the legal limit for a pesticide chemical residue in or on a food) only if EPA determines that the tolerance is ''safe.'' Section 408(b)(2)(A)(ii) of FFDCA defines ''safe'' to mean that ''there is a reasonable certainty that no harm will result from aggregate exposure to the pesticide chemical residue, including all anticipated dietary exposures and all other exposures for which there is reliable information.'' This includes

exposure through drinking water and in residential settings, but does not include occupational exposure. Section 408(b)(2)(C) of FFDCA requires EPA to give special consideration to exposure of infants and children to the pesticide chemical residue in establishing a tolerance and to ''ensure that there is a reasonable certainty that no harm will result to infants and children from aggregate exposure to the pesticide chemical residue. . . .''

Consistent with section 408(b)(2)(D) of FFDCA, and the factors specified in section 408(b)(2)(D) of FFDCA, EPA has reviewed the available scientific data and other relevant information in support of this action. EPA has sufficient data to assess the hazards of and to make a determination on aggregate exposure for the petitioned-for tolerances for combined residues of emamectin and its metabolites in/on almond, hulls at 0.20 ppm; nut, tree, group 14 at 0.02 ppm; and pistachio at 0.02 ppm. EPA's assessment of exposures and risks associated with establishing tolerances follows.

A. Toxicological Profile

EPA has evaluated the available toxicity data and considered its validity, completeness, and reliability as well as the relationship of the results of the studies to human risk. EPA has also considered available information concerning the variability of the sensitivities of major identifiable subgroups of consumers, including infants and children.

Emamectin has moderate acute toxicity by the oral route and low acute toxicity by the dermal and inhalation routes. It is not irritating to the skin, nor is it a dermal sensitizer, but it is a severe eye irritant. The main target tissue is the nervous system, with neuropathology detected in many studies and several species. The dose/response curve was very steep in several studies (most notably with CF–1 mice and dogs), with severe effects (morbid sacrifice and neuropathology) sometimes seen. Although no increased sensitivity was seen in developmental toxicity studies in rats and rabbits, increased qualitative and/or quantitative sensitivity of rat pups was seen in the reproductive toxicity study and in the developmental neurotoxicity study. Review of acceptable oncogenicity and mutagenicity studies provide no indication that emamectin is carcinogenic or mutagenic.

Specific information on the studies received and the nature of the adverse effects caused by emamectin as well as the no-observed-adverse-effect-level (NOAEL) and the lowest-observed-adverse-effect-level (LOAEL) from the toxicity studies can be found at *http://www.regulations.gov* in document *PP 7F7263 - Emamectin benzoate: Risk Assessment for adding new use on tree nuts and pistachios* at pages 13–22 in docket ID number EPA–HQ–OPP–2008–0261.

B. Toxicological Endpoints

For hazards that have a threshold below which there is no appreciable risk, a toxicological point of departure (POD) is identified as the basis for derivation of reference values for risk assessment. The POD may be defined as the highest dose at which no adverse effects are observed (the NOAEL) in the toxicology study identified as appropriate for use in risk assessment. However, if a NOAEL cannot be determined, the lowest dose at which adverse effects of concern are identified (the LOAEL) or a Benchmark Dose (BMD) approach is sometimes used for risk assessment. Uncertainty/safety factors (UFs) are used in conjunction with the POD to take into account uncertainties inherent in the extrapolation from laboratory animal data to humans and in the variations in sensitivity among members of the human population as well as other unknowns. Safety is assessed for acute and chronic dietary risks by comparing aggregate food and water exposure to the pesticide to the acute population adjusted dose (aPAD) and chronic population adjusted dose (cPAD). The aPAD and cPAD are calculated by dividing the POD by all applicable UFs. Aggregate short-term, intermediate-term, and chronic-term risks are evaluated by comparing food, water, and residential exposure to the POD to ensure that the margin of exposure (MOE) called for by the product of all applicable UFs is not exceeded. This latter value is referred to as the Level of Concern (LOC).

For non-threshold risks, the Agency assumes that any amount of exposure will lead to some degree of risk. Thus, the Agency estimates risk in terms of the probability of an occurrence of the adverse effect greater than that expected in a lifetime. For more information on the general principles EPA uses in risk characterization and a complete description of the risk assessment process, see *http://www.epa.gov/pesticides/factsheets/riskassess.htm*.

A summary of the toxicological endpoints for emamectin used for human risk assessment can be found at *http://www.regulations.gov* in document PP 7F7263 - Emamectin benzoate: Risk Assessment for adding new use on tree nuts and pistachios at pages 19–21 in docket ID number EPA–HQ–OPP–2008–0261.

C. Exposure Assessment

1. *Dietary exposure from food and feed uses*. In evaluating dietary exposure to emamectin, EPA considered exposure under the petitioned-for tolerances as well as all existing emamectin tolerances in (40 CFR 180.505). Note: As explained above, while hog tolerances were inadvertently omitted from the last emamectin tolerance listing, previously established hog tolerances continue to exist and were considered in this risk analysis for tree nuts and pistachios. EPA assessed dietary exposures from emamectin in food as follows:

i. *Acute exposure*. Quantitative acute dietary exposure and risk assessments are performed for a food-use pesticide, if a toxicological study has indicated the possibility of an effect of concern occurring as a result of a 1–day or single exposure.

In estimating acute dietary exposure, EPA used food consumption information from the United States Department of Agriculture (USDA) 1994–1996 and 1998 Nationwide Continuing Surveys of Food Intake by Individuals (CSFII). As to residue levels in food, EPA used tolerance levels and 100 percent crop treated (PCT) for tree nuts and pistachios. EPA relied upon anticipated residues based on field trial data and either 100 PCT or maximum surveyed PCT for all other commodities. See Unit C.1.iv. below for full listing of PCTs.

ii. *Chronic exposure*. In conducting the chronic dietary exposure assessment EPA used the food consumption data from the USDA 1994–1996 and 1998 CSFII. As to residue levels in food, EPA added tree nuts (including pistachios) to the previous pome fruit risk assessment using tolerance levels and 100 PCT for tree nuts and pistachios. EPA relied upon anticipated residues based on field trial data and either 100 PCT or averaged surveyed PCT for all other commodities. See Unit III. C.1.iv for full listing of PCTs. Additional refinements included default processing factors where appropriate and chemical-specific processing factors for apple and pear juice based on an emamectin apple processing study.

iii. *Cancer*. Based on the results of carcinogenicity studies in rats and mice, EPA classified emamectin as ''not likely to be carcinogenic to humans'' therefore, an exposure assessment for evaluating cancer risk is not needed for this chemical.

iv. *Anticipated residue and PCT information*. Section 408(b)(2)(E) of

FFDCA authorizes EPA to use available data and information on the anticipated residue levels of pesticide residues in food and the actual levels of pesticide residues that have been measured in food. If EPA relies on such information, EPA must require pursuant to FFDCA section 408(f)(1) that data be provided 5 years after the tolerance is established, modified, or left in effect, demonstrating that the levels in food are not above the levels anticipated. For the present action, EPA will issue such Data Call-Ins as are required by FFDCA section 408(b)(2)(E) and authorized under FFDCA section 408(f)(1). Data will be required to be submitted no later than 5 years from the date of issuance of these tolerances.

Section 408(b)(2)(F) of FFDCA states that the Agency may use data on the actual percent of food treated for assessing chronic dietary risk only if:

• Condition a: The data used are reliable and provide a valid basis to show what percentage of the food derived from such crop is likely to contain the pesticide residue.

• Condition b: The exposure estimate does not underestimate exposure for any significant subpopulation group.

• Condition c: Data are available on pesticide use and food consumption in a particular area, the exposure estimate does not understate exposure for the population in such area.

In addition, the Agency must provide for periodic evaluation of any estimates used. To provide for the periodic evaluation of the estimate of PCT as required by FFDCA section 408(b)(2)(F), EPA may require registrants to submit data on PCT.

The Agency used PCT information as follows (average and maximum, respectively): Apples 5, 5; broccoli 10, 20; cabbage 10, 20; cauliflower 10, 25; celery 15, 35; cotton <1, <2.5; lettuce 10, 15; pears <1, <2.5; peppers 5, 10; spinach 5, 5; tomatoes 10, 15. EPA assumed 100 PCT (both average and maximum) for tree nuts, pistachios, other crops not listed above, and for all livestock commodities. Maximum PCT was used for analysis of acute exposure while average PCT was used for analysis of chronic exposure.

In most cases, EPA uses available data from United States Department of Agriculture/National Agricultural Statistics Service (USDA/NASS), proprietary market surveys, and the National Pesticide Use Database for the chemical/crop combination for the most recent 6 years. EPA uses an average PCT for chronic dietary risk analysis. The average PCT figure for each existing use is derived by combining available public and private market survey data for that use, averaging across all observations, and rounding to the nearest 5%, except for those situations in which the average PCT is less than one. In those cases, 1% is used as the average PCT and 2.5% is used as the maximum PCT. EPA uses a maximum PCT for acute dietary risk analysis. The maximum PCT figure is the highest observed maximum value reported within the recent 6 years of available public and private market survey data for the existing use and rounded up to the nearest multiple of 5%.

The Agency believes that the three conditions discussed in Unit III.C.1.iv. have been met. With respect to Condition a PCT estimates are derived from Federal and private market survey data, which are reliable and have a valid basis. The Agency is reasonably certain that the percentage of the food treated is not likely to be an underestimation. As to Conditions b and c regional consumption information and consumption information for significant subpopulations is taken into account through EPA's computer-based model for evaluating the exposure of significant subpopulations including several regional groups. Use of this consumption information in EPA's risk assessment process ensures that EPA's exposure estimate does not understate exposure for any significant subpopulation group and allows the Agency to be reasonably certain that no regional population is exposed to residue levels higher than those estimated by the Agency. Other than the data available through national food consumption surveys, EPA does not have available reliable information on the regional consumption of food to which emamectin may be applied in a particular area.

2. *Dietary exposure from drinking water*. The Agency used screening level water exposure models in the dietary exposure analysis and risk assessment for emamectin in drinking water. These simulation models take into account data on the physical, chemical, and fate/transport characteristics of emamectin. Further information regarding EPA drinking water models used in pesticide exposure assessment can be found at *http://www.epa.gov/oppefed1/models/water/index.htm*.

Based on the Pesticide Root Zone Model/Exposure Analysis Modeling System (PRZM/EXAMS) and Screening Concentration in Ground Water (SCI–GROW) models, the estimated drinking water concentrations (EDWCs) of emamectin for acute exposures are estimated to be 0.57 parts per billion (ppb) for surface water and 2.7×10^{-4} ppb for ground water. The EDWCs of emamectin for chronic (non-cancer) exposures are estimated to be 0.22 ppb for surface water and 2.7×10^{-4} ppb for ground water.

Modeled estimates of drinking water concentrations were directly entered into the dietary exposure model. For acute dietary risk assessment, the full distribution of estimated residues in surface water generated by the PRZM–EXAMS model was used to assess the contribution to drinking water. For chronic dietary risk assessment, the water concentration of value 0.22 ppb was used to assess the contribution to drinking water.

3. *From non-dietary exposure*. The term ''residential exposure'' is used in this document to refer to non-occupational, non-dietary exposure (e.g., for lawn and garden pest control, indoor pest control, termiticides, and flea and tick control on pets).

Emamectin is not registered for any specific use patterns that would result in residential exposure.

4. *Cumulative effects from substances with a common mechanism of toxicity*. Section 408(b)(2)(D)(v) of FFDCA requires that, when considering whether to establish, modify, or revoke a tolerance, the Agency consider ''available information'' concerning the cumulative effects of a particular pesticide's residues and ''other substances that have a common mechanism of toxicity.''

EPA has not found emamectin to share a common mechanism of toxicity with any other substances, and emamectin does not appear to produce a toxic metabolite produced by other substances. For the purposes of this tolerance action, therefore, EPA has assumed that emamectin does not have a common mechanism of toxicity with other substances. For information regarding EPA's efforts to determine which chemicals have a common mechanism of toxicity and to evaluate the cumulative effects of such chemicals, see EPA's website at *http://www.epa.gov/pesticides/cumulative*.

D. Safety Factor for Infants and Children

1. *In general*. Section 408(b)(2)(c) of FFDCA provides that EPA shall apply an additional tenfold (10X) margin of safety for infants and children in the case of threshold effects to account for prenatal and postnatal toxicity and the completeness of the database on toxicity and exposure unless EPA determines based on reliable data that a different margin of safety will be safe for infants and children. This additional margin of safety is commonly referred to as the FQPA safety factor (SF). In applying this

provision, EPA either retains the default value of 10X, or uses a different additional safety factor when reliable data available to EPA support the choice of a different factor.

2. *Prenatal and postnatal sensitivity*. Prenatal exposure to emamectin results in increased sensitivity of offspring relative to adults (as seen in the rat reproductive toxicity study and the rat developmental neurotoxicity study). EPA has determined that the concern is low for the qualitative susceptibility seen in the two generation reproduction study because:

i. There was a clear NOAEL for offspring toxicity.

ii. Effects unique to offspring (decreased fertility in F_1 adults, and clinical signs (tremors and hind limb extensions during and following lactation)) were seen at the same dose that caused parental systemic toxicity (decreased body weight gain and histopathological lesions in the brain and spinal cord).

iii. The decreased fertility seen in F_1 adults may be secondary to the neurotoxicity characterized by histopathological lesions in the brain and central nervous system (seen in both F_0 and F_1 generations), rather than due to a direct effect on the reproductive system.

EPA has determined that the concern is also low for the qualitative and quantitative susceptibility seen in the developmemtal-neurotoxicity study (DNT) because:

a. Although multiple offspring effects (including decreased pup body weight, head and body tremors, hind limb extension and splay, changes in motor activity and auditory startle) were seen at the highest dose, and no maternal effects were seen at any dose, there was a clear NOAEL for offspring toxicity at the low dose.

b. The offspring LOAEL (at the mid dose) is based on a single effect seen on only 1–day (decreased motor activity on PND 17) and no other offspring toxicity was seen at the LOAEL.

EPA has considered the differences in species sensitivity (rat NOAELs/LOAELs > dog NOAELs/LOAELs > mouse NOAELs/LOAELs) as well as the increased sensitivity of offspring relative to adults (as seen in the rat reproductive toxicity study and the rat developmental neurotoxicity study). EPA has determined that the dose selected for overall risk assessment (based on a 15–day study in adult mice) is lower than the doses that caused offspring toxicity in reproductive toxicity and developmental neurotoxicity studies in rats, the endpoint selected is the most sensitive end point (neurotoxicity) in the most sensitive species (mice) and thus would address the concerns for any potential toxicity in the offspring. Therefore, there are no residual uncertainties for prenatal and/or postnatal toxicity from exposure to emamectin.

3. *Conclusion*. The 10X FQPA safety factor (SF) is retained for chronic assessments while a 3X FQPA SF is adequate for acute assessments. This conclusion is based on the following.

The toxicology database used to assess prenatal and postnatal exposure to emamectin is considered adequate at this time. Note: There is a new data requirement under 40 CFR part 158 following the Immunotixicity Test Guideline (OPPTS 870.7800) which prescribes functional immunotoxicity testing and is designed to evaluate the potential of a repeated chemical exposure to produce adverse effects (i.e., suppression) on the immune system. Because the immune system is highly complex, studies assessing functional immunotoxic endpoints are helpful in fully characterizing a pesticide's potential immunotoxicity. These data will be used in combination with data from hematology, lymphoid organ weights, and histopathology in routine chronic or subchronic toxicity studies to characterize potential immunotoxic effects. The immunotoxicty study will be required as a condition of registration of the proposed emamectin tree nut use. Although there is a complete toxicity database for emamectin (other than new immunotoxicity study), exposure is estimated based on data that reasonably accounts for potential exposures, and increased sensitivity in the young is addressed by selection of a protective endpoint, EPA has retained a 10X FQPA SF for chronic/long-term and intermediate-term assessments due to the steepness of the dose-response curve, severity of effects at the LOAEL (death and neuropathology), the use of a short-term study for long-term risk assessment. The 10X FQPA SF will also provide adequate protection for the lack of the new immunotoxicity study.

The steepness of the dose-response curve and the severity of the effects at the LOAEL also are the basis for EPA retaining a 3X FQPA SF for acute assessments. A 3X FQPA factor was judged to be adequate (as opposed to a 10X) for the following reasons:

i. A NOAEL was established in this study.

ii. Although the effects of concern are seen after repeated dosing, the NOAEL here is used for a single exposure risk assessment

iii. The most sensitive endpoint in the most sensitive species is selected.

This risk analysis used both PCT and anticipated residues in the exposure analysis. For the reasons described in Unit III.C.1.iv the Agency is reasonably certain that the percentage of the food treated is not likely to be an underestimation. Use of consumption information in EPA's risk assessment process ensures that EPA's exposure estimate does not understate exposure for any significant subpopulation group and allows the Agency to be reasonably certain that no regional population is exposed to residue levels higher than those estimated by the Agency.

E. Aggregate Risks and Determination of Safety

EPA determines whether acute and chronic pesticide exposures are safe by comparing aggregate exposure estimates to the aPAD and cPAD. The aPAD and cPAD represent the highest safe exposures, taking into account all appropriate SFs. EPA calculates the aPAD and cPAD by dividing the POD by all applicable UFs. For linear cancer risks, EPA calculates the probability of additional cancer cases given the estimated aggregate exposure. Short-term, intermediate-term, and chronic-term risks are evaluated by comparing the estimated aggregate food, water, and residential exposure to the POD to ensure that the MOE called for by the product of all applicable UFs is not exceeded.

1. *Acute risk*. The acute aggregate risk assessment takes into account exposure from dietary (food and water) consumption. Using the exposure assumptions discussed in this unit for acute exposure, the acute dietary exposure from food and water to emamectin will occupy 45% of the aPAD for children 1–2 years old, the population group receiving the greatest exposure.

2. *Chronic risk*. Using the exposure assumptions described in this unit for chronic exposure, EPA has concluded that chronic exposure to emamectin from food and water will utilize 44% of the cPAD for children 1–2 years old, the population group receiving the greatest exposure. There are no residential uses for emamectin.

3. *Short-term risk*. Short-term aggregate exposure takes into account short-term residential exposure plus chronic exposure to food and water (considered to be a background exposure level). Emamectin is not registered for any use patterns that would result in residential exposure. Therefore, the short-term aggregate risk is the sum of the risk from exposure to emamectin through food and water and

will not be greater than the chronic aggregate risk.

4. *Intermediate-term risk.* Intermediate-term aggregate exposure takes into account intermediate-term residential exposure plus chronic exposure to food and water (considered to be a background exposure level). Emamectin is not registered for any use patterns that would result in intermediate-term residential exposure. Therefore, the intermediate-term aggregate risk is the sum of the risk from exposure to emamectin through food and water, which has already been addressed, and will not be greater than the chronic aggregate risk..

5. *Aggregate cancer risk for U.S. population.* Emamectin is classified as ''not likely to be carcinogenic to humans'' and is, therefore, not expected to pose a cancer risk.

6. *Determination of safety.* Based on these risk assessments, EPA concludes that there is a reasonable certainty that no harm will result to the general population, or to infants and children from aggregate exposure to emamectin residues.

IV. Other Considerations

A. Analytical Enforcement Methodology

1. *Enforcement method for plant commodities.* A high performance liquid chromatography method with fluorescence detection (HPLC/FLD Method 244–92–3) is available for the enforcement of established tolerances for residues of emamectin and its metabolites in/on plants. The method was validated by EPA and submitted to the FDA for inclusion in the Pesticide Analytical Manual (PAM), Vol. II.

The data collection method for nuts is an liquid chromotography/mass spectrometry/mass spectrometry (LC/MS/MS) method (Syngenta Method RAM 465/01, modified). Residues of emamectin (B_{1a} and B1b), 8,9–Z isomer of B_{1a}, AB_{1a}, FAB_{1a} and MFB_{1a} in/on almond and pecan nutmeats and almond hulls are determined. The reported method limit of quantitation (LOQ) is 0.001 ppm for each analyte in nutmeats and almond hulls.

2. *Enforcement method for livestock commodities.* An analytical method is available for enforcement of tolerances for residues of emamectin and its metabolites in/on ruminant commodities. Method 244–95–1 is an HPLC/FLD method which determines residues of emamectin (MAB_{1a} and MAB_{1b}) and the 8,9–Z isomers in livestock commodities. The LOQs are 0.0005 ppm for each analyte (MAB_{1a} + 8,9–ZB_{1a} and MAB_{1b} + 8,9–ZB_{1b}) in whole and skim milk and 0.002 ppm for each analyte (MAB_{1a} + 8,9–ZB_{1a} and MAB_{1a} + 8,9–$2B_{1a}$) in fat, liver, kidney, and meat. The method has been validated by EPA and forwarded to FDA for publication in PAM II.

3. *Multiresidue methods testing.* Data previously submitted by the petitioner show that residues of emamectin are not likely to be recovered by FDA multiresidue methods. The petitioner submitted data pertaining to the multiresidue methods testing of emamectin (B_{1a} and B_{1b} components), AB_{1a}, FAB_{1a}, MFB_{1a} and the 8,9–Z isomer (B_{1a} component). The data have been forwarded to FDA for inclusion in PAM, Vol. I.

Based on the methods described above, EPA has concluded that adequate enforcement methodology is available to enforce the tolerance expression. As indicated, the methods in this Unit have been forwarded to the Food and Drug Administration for inclusion in PAM I. or II. Alternately, methods may be requested from: Chief, Analytical Chemistry Branch, Environmental Science Center, 701 Mapes Rd., Ft. Meade, MD 20755–5350; telephone number: (410) 305–2905; e-mail address: *residuemethods@epa.gov*.

B. International Residue Limits

There are no international harmonization issues associated with proposed uses on tree nuts and pistachios as there are currently no Codex, Canadian, or Mexican maximum residue limits (MRLs) or tolerances for residues of emamectin on tree nuts and pistachios.

C. Response to Comments

No comments were received to the Notice of Filing.

D. Revisions to Petitioned-For Tolerances

Modifications were made to the petition as originally submitted. The original petition proposed nut tolerances on emamectin and its metabolites 8,9 isomer of the B_{1a} and B_{1b} component of the parent insecticide. EPA had previously determined that there are additional metabolites of concern. Therefore, the complete nut tolerances expression is set on emamectin (a mixture of a minimum of 90% 4′-epi-methylamino-4′-deoxyavermectin B_{1a} and maximum of 10% 4′-epi-methylamino-4′-deoxyavermectin B_{1b}) and its metabolites 8,9–isomer of the B_{1a} and B_{1b} component of the parent (8,9–ZMA), or 4′-deoxy-4′-epi-amino-avermectin B_{1a} and 4′-deoxy-4′-epi-amino-avermectin B_{1b}; 4′-deoxy-4′-epi-amino-avermectin B_{1a} (AB_{1a}); 4′-deoxy-4′-epi-(*N*-formyl-*N*-methyl)amino-avermectin (MFB_{1a}); and 4′-deoxy-4′-epi-(*N*-formyl)amino-avermectin B_{1a} (FAB_{1a}). In addition, while the tolerance for almond hulls was proposed at 0.25 ppm, since residues were quantifiable in/on almond hulls from all tests, the Agency's Guidelines for Setting Tolerances Based on Field Trials were utilized for determining the appropriate tolerance level for hulls. Based on the actual residue data from the 28–day pre-harvest interval samples, the calculated tolerance for almond hulls is 0.20 ppm.

V. Conclusion

Therefore, tolerances are established for combined residues of emamectin (a mixture of a minimum of 90% 4′-epi-methylamino-4′-deoxyavermectin B_{1a} and maximum of 10% 4′-epi-methylamino-4′-deoxyavermectin B_{1b}) and its metabolites 8,9-isomer of the B_{1a} and B_{1b} component of the parent (8,9–ZMA), or 4′-deoxy-4′-epi-amino-avermectin B_{1a} and 4′-deoxy-4′-epi-amino-avermectin B_{1b}; 4′-deoxy-4′-epi-amino-avermectin B_{1a} (AB_{1a}); 4′-deoxy-4′-epi-(*N*-formyl-*N*-methyl)amino-avermectin (MFB_{1a}); and 4′-deoxy-4′-epi-(*N*-formyl)amino-avermectin B_{1a} (FAB_{1a}) in/on almond, hulls at 0.20 ppm; nut, tree, group 14 at 0.02 ppm; and pistachio at 0.02 ppm. In addition, permanent tolerances continue to exist as stated in the final rule published on July 9, 2003 in (68 FR 40791) (FRL–7316–6) for emamectin (MAB_{1a} + MAB_{1b}) and the 8,9–Z isomers (8,9–ZB_{1a} and 8,9–ZB_{1b}) in hog, fat at 0.003 ppm; hog, liver at 0.020 ppm; hog, meat at 0.002 ppm; and hog, meat byproducts (except liver) at 0.005 ppm.

VI. Statutory and Executive Order Reviews

This final rule establishes tolerances under section 408(d) of FFDCA in response to a petition submitted to the Agency. The Office of Management and Budget (OMB) has exempted these types of actions from review under Executive Order 12866, entitled *Regulatory Planning and Review* (58 FR 51735, October 4, 1993). Because this final rule has been exempted from review under Executive Order 12866, this final rule is not subject to Executive Order 13211, entitled *Actions Concerning Regulations That Significantly Affect Energy Supply, Distribution, or Use* (66 FR 28355, May 22, 2001) or Executive Order 13045, entitled *Protection of Children from Environmental Health Risks and SafetyRisks* (62 FR 19885, April 23, 1997). This final rule does not contain any information collections subject to OMB approval under the Paperwork Reduction Act (PRA), 44 U.S.C. 3501 *et*

seq., nor does it require any special considerations under Executive Order 12898, entitled *Federal Actions to Address Environmental Justice in Minority Populations and Low-Income Populations* (59 FR 7629, February 16, 1994).

Since tolerances and exemptions that are established on the basis of a petition under section 408(d) of FFDCA, such as the tolerance in this final rule, do not require the issuance of a proposed rule, the requirements of the Regulatory Flexibility Act (RFA) (5 U.S.C. 601 *et seq.*) do not apply.

This final rule directly regulates growers, food processors, food handlers, and food retailers, not States or tribes, nor does this action alter the relationships or distribution of power and responsibilities established by Congress in the preemption provisions of section 408(n)(4) of FFDCA. As such, the Agency has determined that this action will not have a substantial direct effect on States or tribal governments, on the relationship between the national government and the States or tribal governments, or on the distribution of power and responsibilities among the various levels of government or between the Federal Government and Indian tribes. Thus, the Agency has determined that Executive Order 13132, entitled *Federalism* (64 FR 43255, August 10, 1999) and Executive Order 13175, entitled *Consultation and Coordination with Indian Tribal Governments* (65 FR 67249, November 9, 2000) do not apply to this final rule. In addition, this final rule does not impose any enforceable duty or contain any unfunded mandate as described under Title II of the Unfunded Mandates Reform Act of 1995 (UMRA) (Public Law 104–4).

This action does not involve any technical standards that would require Agency consideration of voluntary consensus standards pursuant to section 12(d) of the National Technology Transfer and Advancement Act of 1995 (NTTAA), Public Law 104–113, section 12(d) (15 U.S.C. 272 note).

VII. Congressional Review Act

The Congressional Review Act, 5 U.S.C. 801 *et seq.*, generally provides that before a rule may take effect, the agency promulgating the rule must submit a rule report to each House of the Congress and to the Comptroller General of the United States. EPA will submit a report containing this rule and other required information to the U.S. Senate, the U.S. House of Representatives, and the Comptroller General of the United States prior to publication of this final rule in the **Federal Register**. This final rule is not a ''major rule'' as defined by 5 U.S.C. 804(2).

List of Subjects in 40 CFR Part 180

Environmental protection, Administrative practice and procedure, Agricultural commodities, Pesticides and pests, Reporting and recordkeeping requirements.

Dated: January 6, 2009.

Lois Rossi,

Director, Registration Division, Office of Pesticide Programs.

■ Therefore, 40 CFR chapter I is amended as follows:

PART 180—[AMENDED]

■ 1. The authority citation for part 180 continues to read as follows:

Authority: 21 U.S.C. 321(q), 346a and 371.

■ 2. Section § 180.505 is amended by alphabetically adding the following commodities to the tables in paragraphs (a)(1) and (2) to read as follows:

§ 180.505 Emamectin; tolerances for residues.

(a) * * * (1) * * *

Commodity	Parts per million
Almond, hulls	0.20
* * * *	*
Nut, tree, group 14	0.02
Pistachio	0.02
* * * *	*

* * * * *

(2) * * *

Commodity	Parts per million
* * * *	*
Hog, fat	0.003
Hog, liver	0.020
Hog, meat	0.002
Hog, meat byproducts (except liver)	0.005
* * * *	*

* * * * *

[FR Doc. E9–625 Filed 1–15–09; 8:45 am]

BILLING CODE 6560–50–S

DEPARTMENT OF HEALTH AND HUMAN SERVICES

Centers for Medicare & Medicaid Services

42 CFR Part 414

[CMS–1561–IFC]

RIN 0938–AP59

Medicare Program; Changes to the Competitive Acquisition of Certain Durable Medical Equipment, Prosthetics, Orthotics and Supplies (DMEPOS) by Certain Provisions of the Medicare Improvements for Patients and Providers Act of 2008 (MIPPA)

AGENCY: Centers for Medicare & Medicaid Services (CMS), HHS.

ACTION: Interim final rule with comment period.

SUMMARY: This interim final rule with comment period implements certain provisions of section 154 of the Medicare Improvements for Patients and Providers Act of 2008 (MIPPA) related to the durable medical equipment, prosthetics, orthotics, and supplies (DMEPOS) Competitive Acquisition Program. Specifically, this rule: Implements certain MIPPA provisions that delay implementation of Round 1 of the program; requires CMS to conduct a second Round 1 competition (the ''Round 1 rebid'') in 2009; and mandates certain changes for both the Round 1 rebid and subsequent rounds of the program, including a process for providing feedback to suppliers regarding missing financial documentation and requiring contractors to disclose to CMS information regarding subcontracting relationships.

DATES: *Effective date:* These regulations are effective on February 17, 2009.

Comment date: To be assured consideration, comments must be received at one of the addresses provided below, no later than 5 p.m. on March 17, 2009.

ADDRESSES: In commenting, please refer to file code CMS–1561–IFC. Because of staff and resource limitations, we cannot accept comments by facsimile (FAX) transmission.

You may submit comments in one of four ways (please choose only one of the ways listed):

1. *Electronically.* You may submit electronic comments on specific issues in this regulation to *http://www.regulations.gov.* Follow the instructions for ''Comment or Submission'' and enter the filecode to find the document accepting comments.

2. *By regular mail*. You may mail written comments (one original and two copies) to the following address only: Centers for Medicare & Medicaid Services, Department of Health and Human Services, Attention: CMS–1561–IFC, P.O. Box 8020, Baltimore, MD 21244–8020.

Please allow sufficient time for mailed comments to be received before the close of the comment period.

3. *By express or overnight mail*. You may send written comments (one original and two copies) to the following address only: Centers for Medicare & Medicaid Services, Department of Health and Human Services, Attention: CMS–1561–IFC, Mail Stop C4–26–05, 7500 Security Boulevard, Baltimore, MD 21244–1850.

4. *By hand or courier*. If you prefer, you may deliver (by hand or courier) your written comments (one original and two copies) before the close of the comment period to either of the following addresses:

a. Room 445–G, Hubert H. Humphrey Building, 200 Independence Avenue, SW., Washington, DC 20201;

(Because access to the interior of the HHH Building is not readily available to persons without Federal Government identification, commenters are encouraged to leave their comments in the CMS drop slots located in the main lobby of the building. A stamp-in clock is available for persons wishing to retain a proof of filing by stamping in and retaining an extra copy of the comments being filed.)

b. 7500 Security Boulevard, Baltimore, MD 21244–1850.

If you intend to deliver your comments to the Baltimore address, please call telephone number (410) 786–7195 in advance to schedule your arrival with one of our staff members.

Comments mailed to the addresses indicated as appropriate for hand or courier delivery may be delayed and received after the comment period.

Submission of comments on paperwork requirements. You may submit comments on this document's paperwork requirements by following the instructions at the end of the ''Collection of Information Requirements'' section in this document.

For information on viewing public comments, see the beginning of the **SUPPLEMENTARY INFORMATION** section.

FOR FURTHER INFORMATION CONTACT: Sabrina Teferi, (410) 786–6884. Barry Brook, (410) 786–5889.

SUPPLEMENTARY INFORMATION: *Inspection of Public Comments:* All comments received before the close of the comment period are available for viewing by the public, including any personally identifiable or confidential business information that is included in a comment. We post all comments received before the close of the comment period on the following Web site as soon as possible after they have been received: *http://regulations.gov*. Follow the search instructions on that Web site to view public comments.

Comments received timely will be also available for public inspection as they are received, generally beginning approximately 3 weeks after publication of a document, at the headquarters of the Centers for Medicare & Medicaid Services, 7500 Security Boulevard, Baltimore, Maryland 21244, Monday through Friday of each week from 8:30 a.m. to 4 p.m. To schedule an appointment to view public comments, phone 1–800–743–3951.

I. Background

A. Legislative and Regulatory History of the DMEPOS Competitive Bidding Program

Medicare pays for most DMEPOS furnished after January 1, 1989 pursuant to fee schedule methodologies set forth in section 1834 of the Social Security Act (the Act), as added by section 4062 of the Omnibus Budget Reconciliation Act of 1987 (OBRA '87) (Pub. L. 100–203). Specifically, sections 1834(a)(1)(A) and (B), and 1834 (h)(1)(A) of the Act provide that Medicare payment for these items is equal to 80 percent of the lesser of the actual charge for the item or the fee schedule amount for the item. We implemented this payment methodology at 42 CFR Part 414, Subpart D of our regulations. Sections 1834(a)(2) through (a)(5) and 1834(a)(7) of the Act, and implementing regulations at § 414.200 through § 414.232 (with the exception of § 414.228), set forth separate payment categories of durable medical equipment (DME) and describe how the fee schedule for each of the following categories is established:

- Inexpensive or other routinely purchased items (section 1834(a)(2) of the Act and § 414.220 of the regulations);
- Items requiring frequent and substantial servicing (sections 1834(a)(3) of the Act and § 414.222 of the regulations);
- Customized items (section 1834(a)(4) of the Act and § 414.224 of the regulations);
- Oxygen and oxygen equipment (section 1834(a)(5) of the Act and § 414.226 of the regulations);
- Other items of DME (section 1834(a)(7) of the Act and § 414.229 of the regulations).

For a detailed discussion of payment for DMEPOS under fee schedules, see the final rule published in the April 10, 2007 **Federal Register** (72 FR 17992).

Section 1847 of the Act, as amended by section 302(b)(1) of the Medicare Prescription Drug, Improvement, and Modernization Act of 2003 (MMA) (Pub. L. 108–173), requires the Secretary to establish and implement a Medicare DMEPOS Competitive Bidding Program (''Competitive Bidding Program'' or ''program''). Under the Competitive Bidding Program, Medicare sets payment amounts for selected DMEPOS items and services furnished to beneficiaries in competitive bidding areas (CBAs) based on bids submitted by qualified suppliers and accepted by Medicare. For competitively bid items, these new payment amounts, referred to as ''single payment amounts,'' replace the fee schedule payment methodology. Section 1847(b)(5) of the Act provides that Medicare payment for these competitively bid items and services is made on an assignment-related basis equal to 80 percent of the applicable single payment amount, less any unmet Part B deductible described in section 1833(b) of the Act. Section 1847(b)(2)(A)(iii) of the Act prohibits the awarding of contracts to any entity unless the total amounts to be paid to contractors in a CBA are expected to be less than the total amounts that would otherwise be paid under the fee schedule methodologies set forth in section 1834(a) of the Act. This requirement guarantees savings to both the Medicare program and beneficiaries under the program. The fee schedule methodologies will continue to set payment amounts for noncompetitively bid DMEPOS items and services. The program also includes provisions to ensure beneficiary access to quality DMEPOS items and services: section 1847 of the Act limits participation in the program to suppliers who have met applicable quality and financial standards and requires the Secretary to maintain beneficiary access to multiple suppliers.

When first enacted by the Congress, section 1847(a)(1)(B) of the Act required the Secretary to phase in the Competitive Bidding Program in a manner so that the competition under the program occurred in 10 of the largest metropolitan statistical areas (MSAs) in 2007. The program was to be expanded into 70 additional MSAs in 2009, and then into additional areas after 2009.

In the May 1, 2006 **Federal Register** (72 FR 25654), we issued a proposed

rule that would implement the Competitive Bidding Program for certain DMEPOS items and services and solicited public comment on our proposals. In the April 10, 2007 **Federal Register** (72 FR 17992), we issued a final rule addressing the comments on the proposed rule and establishing the regulatory framework for the Medicare DMEPOS Competitive Bidding Program in accordance with section 1847 of the Act.

Consistent with the requirements of section 1847 of the Act and the competitive bidding regulations, we began implementing the program by conducting the first round of competition in 10 of the largest MSAs in 2007. We limited competition during this first round of the program to DMEPOS items and services included in 10 selected product categories. The bidding window opened on May 15, 2007 and was extended to allow bidders adequate time to prepare and submit their bids. We then evaluated each submission and awarded contracts consistent with the requirements of section 1847(b)(2) of the Act and § 414.414. Following the bid evaluation process, we awarded over 329 contracts to qualified suppliers.

We implemented the Competitive Bidding Program on July 1, 2008. Beginning on that date, Medicare coverage for competitively bid DMEPOS items and services furnished in the first 10 competitive bidding areas (CBAs) was limited to items and services furnished by contract and grandfathered suppliers, and payment to these suppliers was based on the single payment amount, as determined under the competitive bidding regulations. This program was projected to result in a savings of approximately 26 percent annually to the Medicare program and Medicare beneficiaries. We calculated these projections by subtracting the lower single payment amount from the applicable fee schedule amount per CBA per item and then multiplying this amount by the weighted national utilization data. For further discussion of the Competitive Bidding Program and the bid evaluation process, see the final rule published in the April 10, 2007 **Federal Register** (72 FR 17992).

B. The MIPPA and the Medicare DMEPOS Competitive Bidding Program

On July 15, 2008, the Medicare Improvements for Patients and Providers Act (MIPPA) was enacted. Section 154 of the MIPPA amended section 1847 of the Act to make certain limited changes to the Medicare DMEPOS Competitive Bidding Program. Section 154(a) of the MIPPA delays competition under the program and amends section 1847(a)(1)(D)(i) of the Act to terminate the competitive bidding contracts effective June 30, 2008 and prohibit payment based on the contracts. This action effectively reinstates as payment for competitively bid items and services the Medicare fee schedule amounts, as set forth in section 1834 of the Act and 42 CFR part 414, subpart D of our regulations. In light of the amendments, items that had been included in the first round of the Competitive Bidding Program could once again be furnished by any enrolled DMEPOS supplier in accordance with existing Medicare rules. Payments for these items would no longer be made pursuant to competitive bidding contracts at the single payment amount, but instead would be based on the applicable Medicare fee schedule (includes 9.5 percent reduction) amount(s) based on the date of service.

Section 154(a) of the MIPPA requires the Secretary to conduct a second competition to select suppliers for Round 1 in 2009 (''Round 1 rebid''). The Round 1 rebid includes the ''same items and services'' and is to be conducted in the ''same areas'' as the 2007 Round 1 competition, with certain limited exceptions. Specifically, the Round 1 rebid must exclude negative pressure wound therapy (NPWT) items and services and exclude Puerto Rico. In addition, section 154(a) of the MIPPA permanently excludes group 3 complex rehabilitative wheelchairs from the Competitive Bidding Program by amending the definition of ''items and services'' in section 1847(a)(2) of the Act. Suppliers, including suppliers that previously were awarded a competitive bidding contract, will need to submit bids to be considered for a contract under the Round 1 rebid.

Section 154(a) of the MIPPA also delays competition for Round 2 of the competitive bidding program from 2009 to 2011 and subsequent competition under the program from 2009 until after 2011. A competition for a national mail order competitive bidding program may occur after 2010.

The MIPPA mandates certain changes to the bidding process, starting with the Round 1 rebid. Section 154(a) of the MIPPA adds a new paragraph (F) to section 1847(a)(1) of the Act, which sets forth a process for supplier feedback on missing financial documents. Pursuant to this requirement, we will notify suppliers who submit their bids within a specific time period if their bid submission is missing any of the required financial documents. We will allow suppliers to submit missing financial documents within 10 business days after this notice.

Section 154(b) of the MIPPA amends section 1847(b)(3) of the Act to require contract suppliers to notify us of subcontracting relationships they have entered into for the purpose of furnishing items and services under the competitive bidding program. Contract suppliers must also inform CMS whether each such subcontractor meets the accreditation requirement set forth in section 1834(a)(20)(F)(i) of the Act, if applicable to such subcontractor.

Section 154(d) of the MIPPA excludes from the competitive bidding program certain DME furnished by a hospital to the hospital's patients during an admission or on the date of discharge.

In addition to the changes outlined above that we are implementing through this interim final rule with comment period, section 154 of the MIPPA made other changes to the competitive bidding program which include:

- Exclusions of certain areas in subsequent rounds that are not already selected under Rounds 1 and 2;
- Extension of the Program Advisory and Oversight Committee;
- Exemption for Off-the-Shelf Orthotics from Competitive Bidding when provided by Certain Provided; and
- Evaluation of certain Healthcare Common Procedure Coding System (HCPCS) codes.

These provisions are not addressed in this rule, but may be addressed through future rulemaking or subregulatory guidance, as appropriate.

As the following are administrative requirements, they are not addressed in this rule and will be handled by the appropriate agencies:

- A post-award audit by the Office of Inspector General;
- Establishment of a Competitive Acquisition Ombudsman;
- A Government Accountability Office report on the results of the competitive bidding program;

As discussed below, we believe that the changes specifically mandated for the Round 1 rebid are largely self-implementing. The MIPPA delayed the Competitive Bidding Program and requires certain changes in subsequent competitions under the program, but it did not alter the fundamental requirements contained in the competitive bidding program statute and regulations, or revise the methodologies used by us in calculating payment amounts and selecting suppliers under the program. We have therefore chosen to continue to apply the same methodologies to calculate payment and select suppliers, and,

except as discussed below, the current competitive bidding regulations published on April 10, 2007 will continue to provide the framework under which we implement the program.

We will implement other changes regarding subsequent rounds of competition through future rulemaking or subregulatory guidance, as appropriate. As noted in the regulatory impact analysis of this rule, the MIPPA mandated a nationwide 9.5 percent reduction in payment for all items and services that were competitively bid during the prior round of competition regardless of any exclusion such as group 3 complex rehabilitative wheelchairs. The 9.5 percent reduction in payment was completed through the standard process for covered item updates rather than through this rule.

II. Provisions of the Interim Final Rule

In this interim final rule, we are revising current provisions at 42 CFR Part 414, Subpart F, to incorporate certain self-implementing MIPPA provisions. To the extent this interim final rule with comment period does not specifically modify regulatory language, the current regulations, as set forth in the April 10, 2007 final rule, remain unchanged and will govern the Round 1 rebid.

The interim final rule addresses the following changes made by the MIPPA:

General Changes to the DMEPOS Competitive Bidding Program

- Temporary Delay of the Medicare DMEPOS Competitive Bidding Program
- Supplier Feedback on Missing Covered Documents
- Disclosure of Subcontractors and their Accreditation Status under the Competitive Bidding Program
- Exemption from Competitive Bidding for Certain DMEPOS
- Exclusion of Group 3 Complex Rehabilitative Wheelchairs

Round 1 Changes of the Competitive Bidding Program

- Rebidding of the ''same areas'' as the previous Round 1, unless otherwise specified.
- Rebidding of the ''same items and services'' as the previous Round 1, unless otherwise specified.

A. General Changes to the DMEPOS Competitive Bidding Program

1. Temporary Delay of the Medicare DMEPOS Competitive Bidding Program

Section 154(a) of the MIPPA amends section 1847(a)(1) of the Act to delay competition under Rounds 1 and 2 of the Competitive Bidding Program from 2007 and 2009 to 2009 and 2011, respectively. It also delays competition for a national mail order program until after 2010 and competition in additional areas, other than mail order, until after 2011.

We are amending § 414.410(a)(1) and (2) to indicate that competition under Round 1 of the competitive bidding program will occur in 2009 and competition under Round 2 of the program will occur in 2011. In addition, we are revising § 414.410(a)(3) to indicate that competition in additional MSAs will occur after 2011 (or, in the case of national mail order for items and services, after 2010) .

2. Supplier Feedback on Missing Covered Documents

Section 1847(b)(2)(A) of the Act prohibits the Secretary from awarding a contract under the program to a supplier unless the supplier meets applicable financial standards specified by the Secretary, taking into account the needs of small providers. We have implemented this requirement at § 414.414(d) of the competitive bidding regulations, which requires suppliers to submit, as part of their bids, financial documents specified in the request for bids (RFB).

The RFB issued for the Round 1 rebid will require suppliers to submit the same categories of financial documents as we requested for the previous Round 1 competition. In the previous round of competition, we required suppliers to submit financial documents from the most recent three years. As stated in 42 CFR 414.414(d), the required financial documents will be specified in the RFB. Based on experience from the previous round of competition, we are modifying the required financial documents to lessen the burden on suppliers; instead of 3 years of documentation, we will require only 1 year. We believe that we can determine whether a supplier demonstrates financial soundness by reviewing one year of documentation.

Section 154(a) of the MIPPA adds a new paragraph (F) to section 1847(a)(1) of the Act, which establishes a detailed process by which we must notify suppliers of missing ''covered documents''—defined by MIPPA as financial, tax or other documents required to be submitted by a bidder as part of an original bid submission in order to meet required financial standards—if such documents are submitted within a specified time period. The MIPPA details the specific steps of this process and provides a timeline for each stage of this covered document submission review. We are implementing this provision of the MIPPA consistent with its detailed requirements.

Consistent with section 1847(a)(1)(F) of the Act, in the case of a bid in which one or more covered documents in connection with such a bid has been submitted not later than the covered document review date, we will notify suppliers of each covered document that is missing from the bidder's submission as of the covered document review date. As set out in the Act the ''covered document review date'' is the later of—(1) the date that is 30 days before the final date specified by the Secretary for submission of bids; or (2) the date that is 30 days after the first date specified by the Secretary for submission of bids. For example, if a bid window opens on January 1st and closes on April 30th, the ''covered document review date'' would be the later of: (1) March 31st (30 days before the final date specified by the Secretary); or (2) January 31st (30 days after the first date specified by the Secretary). Therefore, in this case, the ''covered document review date'' will be March 31st. Suppliers that submit their financial documents after the covered document review date will not receive notice of any missing financial documents.

Section 1847(a)(1)(F)(i) of the Act requires that we notify bidders of any missing covered documents within 45 days after the covered document review date for the Round 1 rebid. In subsequent rounds of competition, we have 90 days after the covered document review date to provide such notice. For all rounds of competition, bidders that are notified of the missing covered document(s) have 10 business days after the date of notice to submit the missing covered document(s). If a supplier submits the missing covered document(s) within this time period, we may not reject the supplier's bid on the basis that any covered document is missing or has not been submitted on a timely basis.

Section 1847(a)(1)(F)(iii) of the Act places certain limitations on the covered document review process. First, the covered document review process applies only to the timely submission (prior to the covered document review date) of covered documents. Second, the process does not apply to any determination as to the accuracy or completeness of the covered documents submitted or whether such documents meet applicable financial requirements. Third, the process does not prevent us from rejecting a bid for reasons other than those not described in section 1847(a)(1)(F)(i)(II) of the Act. Fourth, the covered document review process shall not be construed as permitting a bidder

to change bidding amounts or to make other changes in a bid submission.

We are revising § 414.414(d) by adding paragraphs (2)(i) through (iii) to set forth the required covered document review process. These paragraphs identify the timeframes established by the MIPPA for—

- Suppliers to submit covered documents in order to be eligible to receive notice of any missing covered documents;
- For CMS to review the submitted covered documents and notify bidders of any missing covered documents; and
- For suppliers to submit the missing covered documents.

We are also adding a definition for ''covered document'' and ''covered document review date'' to § 414.402.

3. Disclosure of Subcontractors and Their Accreditation Status Under the Competitive Bidding Program

Section 154(b)(2) of the MIPPA adds a new paragraph (C) to section 1847(b)(3) of the Act. This new paragraph requires contract suppliers to disclose information on: (1) Each subcontracting arrangement the supplier has in furnishing items and services under the contract; and (2) whether each such subcontractor meets the accreditation requirement of section 1834(a)(20)(F)(i) of the Act, if applicable to such subcontractor. The contract supplier must make this disclosure not later than 10 days after the date a supplier enters into a contract with CMS. If the contract supplier subsequently enters into a subcontracting relationship, the supplier must disclose this information to CMS no later than 10 days after entering into the subcontracting relationship. We will issue subregulatory guidance regarding the need to keep CMS current on all subcontracting relationships.

Section 154(b) of the MIPPA added section 1834(a)(20)(F)(i) to the Act, which mandates that the Secretary require suppliers furnishing items and services under a competitive bidding program on or after October 1, 2009, directly or as a subcontractor for another entity, to submit evidence of accreditation by a CMS-designated accreditation organization. Both contract suppliers and their subcontractors that furnish items and services under the competitive bidding program must do so in accordance with the applicable supplier standards found in Part 424, subpart D and other Federal regulations.

We are amending § 414.414(c), redesignating § 414.422(f) as § 414.422(g) and adding a new § 414.422(f) to set forth these requirements for disclosing subcontracting arrangements. We expect to further address subcontracting relationships and the method for disclosure of the subcontracting relationships in subregulatory guidance.

4. Exemption From Competitive Bidding For Certain DMEPOS

Section 414.404(b) currently exempts from competitive bidding certain DME items when furnished by a physician or treating practitioner to his or her own patients as part of his or her professional services. This exception is limited to crutches, canes, walkers, folding manual wheelchairs, blood glucose monitors, and infusion pumps that are DME. Section 154(d) of the MIPPA amended section 1847(a) of the Act to exclude from the competitive bidding program these same items when they are furnished by hospitals to the hospital's own patients during an admission or on the date of discharge. We are interpreting this exclusion to include only DMEPOS paid for under Part B of the Medicare program because section 1847 does not apply to items that are paid for under Part A. As discussed in the April 10, 2007 final rule, in accordance with § 414.404(b)(3) payment for items furnished under the exceptions in § 414.404(b) will be made in accordance with § 414.408(a).

We are amending § 414.402 to include a definition for hospitals. We have also amended § 414.404(b)(1) to incorporate the added exemption for hospitals that furnish certain types of competitively bid DME to their own patients during an admission or on the date of discharge from the competitive bidding program. In addition, we amended subparagraph (b)(1)(iii) to address the billing requirements for hospitals under this exemption.

5. Exclusion of Group 3 Complex Rehabilitative Power Wheelchairs

Section 1847(a)(2) of the Act defines the items and services subject to competitive bidding. Section 1847(a)(2)(A) of the Act includes durable medical equipment and supplies as items and services subject to competitive bidding. Section 154(a) of the MIPPA amended this definition to exempt group 3 complex rehabilitative power wheelchairs (and related accessories when furnished in connection with such wheelchairs) from competitive bidding. For Medicare coding, coverage, and payment purposes, power wheelchairs are classified under several groups based on performance and durability test results, patient weight capacity, and equipment handling capabilities. For a description of the components, performance requirements and coding guidelines for group 3 power wheelchairs, see *https://www.dmepdac.com/resources/articles/2006/08_14_06.pdf*. Group 2 complex rehabilitative power wheelchairs will be included in the competitive bidding program because they were not excluded by the MIPPA and thus will continue to be included in the Round 1 competitive bidding program.

We are amending § 414.402 to revise the definition of ''item'' to exclude group 3 complex rehabilitative wheelchairs from the competitive bidding program.

B. Round 1 Changes of the Competitive Bidding Program

1. Rebidding of the ''same areas'' as the previous Round 1, unless otherwise specified.

Section 1847(a)(1)(D)(i)(II) of the Act, as amended by section 154(a) of the MIPPA, requires us to conduct a Round 1 rebid in 2009. Pursuant to section 1847(a)(1)(D)(i)(II) of the Act, we shall conduct the competition for the Round 1 rebid in a manner ''so that it occurs in 2009 with respect to the same items and services and the same areas'' as the first Round 1 competition, except as provided by section 1847(a)(1)(D)(i)(III) and (IV) of the Act. Under section 1847(a)(1)(D)(i)(III), as amended by the MIPPA, we must exclude Puerto Rico so that the Round 1 rebid of the competitive bidding program occurs in 9 of the largest MSAs. Therefore, the Round 1 rebid will occur in the following MSAs:

- Cincinnati—Middletown (Ohio, Kentucky and Indiana)
- Cleveland—Elyria—Mentor (Ohio)
- Charlotte—Gastonia—Concord (North Carolina and South Carolina)
- Dallas—Fort Worth—Arlington (Texas)
- Kansas City (Missouri and Kansas)
- Miami—Fort Lauderdale—Miami Beach (Florida)
- Orlando (Florida)
- Pittsburgh (Pennsylvania)
- Riverside—San Bernardino—Ontario (California)

Section 154(a) of MIPPA mandated that we conduct the round 1 ''re-bid'' in the ''same areas''—except for Puerto Rico—as the previous competition. As stated in the final rule, we identified CBAs in the first round of competition by counties and zip codes to clearly identify the boundaries of a CBA. Therefore, we believe it is reasonable to implement the ''same areas'' mandate by conducting the round 1 re-bid in those same zip codes. It is possible that

certain zip codes may have changed since the first competition. We will therefore review zip code changes made since 2007 and incorporate applicable updates to these zip codes. For example, if a particular zip code has been split into two new zip codes, we will include the new zip codes in the CBA. We will not add any new zip codes that would expand the geographic area of the CBAs.

Accordingly, we are amending § 414.410(a)(1) to reflect the areas for competition set forth in section 1847(a)(1) of the Act, as amended by the MIPPA.

2. Rebidding of the ''same items and services'' as the previous Round 1, unless otherwise specified.

Section 1847(a)(1)(D)(i)(II) of the Act, as amended by the MIPPA, requires that we conduct the Round 1 rebid competitive bidding program with respect to the ''same items and services'' as were previously bid in Round 1 except as provided in section 1847(a)(1)(D)(i)(IV) of the Act, which excludes negative pressure wound therapy. The Round 1 rebid will also exclude group 3 complex rehabilitative power wheelchairs as noted previously. Therefore, the Round 1 rebid will include the following categories of items and services:

- Oxygen Supplies and Equipment
- Standard Power Wheelchairs, Scooters, and Related Accessories
- Complex Rehabilitative Power Wheelchairs and Related Accessories (Group 2)
- Mail-Order Diabetic Supplies
- Enteral Nutrients, Equipment and Supplies
- Continuous Positive Airway Pressure (CPAP), Respiratory Assist Devices (RADs), and Related Supplies and Accessories
- Hospital Beds and Related Accessories
- Walkers and Related Accessories
- Support Surfaces (Group 2 mattresses and overlays) in Miami.

In the April 10, 2007 final rule we define an item, in part, as a product included in a competitive bidding program that is identified by a HCPCS code.

Therefore, consistent with our understanding of the MIPPA and the mandate that bidding in the Round 1 rebid occur with respect to the ''same items and services'' as the previous round of competition, we will conduct the competition for the Round 1 rebid for essentially the same codes for which we bid in 2007. We have made certain adjustments to reflect changes in the HCPCS codes consistent with § 414.426. We have made additional exceptions for obsolete codes and codes which, in light of the MIPPA amendments, are no longer separately payable. For example, under the MIPPA, the transfer of title provision was deleted, thus oxygen accessories are no longer separately payable because the supplier maintains ownership of the equipment. The final list of HCPCS codes will be published on the Competitive Bidding Implementation Contractor (CBIC) Web site at *http://www.dmecompetitivebid.com* prior to opening of the bid window.

III. Considerations for Future Rulemaking Under the Competitive Bidding Program

We are considering alternatives for the competition of diabetic supplies. This competition will potentially take place sometime after the Round 1 rebid, and will be the subject of a future notice and comment rulemaking. We believe it is consistent with the section 1847(a) of the Act to employ competitive bidding for diabetic supplies in both the mail order and traditional retail markets, in part due to concerns raised about the bifurcation of the method of delivery of diabetic supplies and the difficulty in defining what constitutes ''mail order.'' We welcome public comment on the competition of diabetic supplies.

IV. Response to Comments

Because of the large number of public comments we normally receive on **Federal Register** documents, we are not able to acknowledge or respond to them individually. We will consider all comments we receive by the date and time specified in the **DATES** section of this preamble, and, when we proceed with a subsequent document, we will respond to the comments in the preamble to that document.

V. Waiver of Proposed Rulemaking

We ordinarily publish a notice of proposed rulemaking in the **Federal Register** to provide for public comment before the provisions of a rule take effect in accordance with section 553(b) of the Administrative Procedure Act (APA) and section 1871 of the Act. This process may be waived, however, if an agency finds good cause that a notice and comment procedure is impracticable, unnecessary, or contrary to the public interest. In such cases, the agency must incorporate a statement of this finding and its reasons in the rule issued, or explain that the agency is promulgating interpretive rules, general statements of policy, or rules of agency procedure or practice outside the scope of notice and comment rulemaking.

We do not believe that we need to delay publication of this rule until a notice and comment period is completed. We are conforming the competitive bidding regulations to specific statutory requirements contained in section 154 of MIPPA and informing the public of the procedures and practices the agency will follow to ensure compliance with those statutory provisions. However, to the extent that notice and comment rulemaking would otherwise apply, we find good cause to waive such requirements.

We find it unnecessary to undertake notice and comment rulemaking in this instance in light of the statutory language. We are applying statutory language that is highly detailed and proscriptive, and we believe it is redundant to, in effect, propose a rule to incorporate the words of a provision already contained in the statute. We would not be able to revise the changes to this regulation in response to public comment because this regulation reiterates the statutory language found in MIPPA and because the statute requires implementation to occur in 2009. We are also describing a procedure to ensure compliance with the relevant provisions of the statute. This description is exempt from notice and comment rulemaking as an interpretive rule, general statement of policy, and/or rule of agency procedure or practice. Therefore, under 5 U.S.C. 553(b), we find good cause to waive notice and comment rulemaking procedures for this revision, if such procedures are required at all.

VI. Collection of Information Requirements

Under the Paperwork Reduction Act of 1995, we are requesting emergency approval of the information collection requirements contained in this interim final rule with comment period. Please provide comments on these information collection requirements by February 2, 2009. In order to fairly evaluate whether an information collection should be approved by OMB, section 3506(c)(2)(A) of the Paperwork Reduction Act of 1995 requires that we solicit comment on the following issues:

The need for the information collection and its usefulness in carrying out the proper functions of our agency.

- The accuracy of our estimate of the information collection burden.
- The quality, utility, and clarity of the information to be collected.
- Recommendations to minimize the information collection burden on the affected public, including automated collection techniques.

These requirements are not effective until approved by OMB. We are soliciting public comment on the

following information collection requirements (ICRs):

A. ICRs Regarding Round 1 Rebid

We previously estimated that the burden associated with Round 1 would be 1,086,164 hours. Our estimate was that on average it would take a supplier 68 hours to complete and submit a bid and that we would receive 15,973 bids. Although we expect the amount of hours to generally remain the same (68 hours) for the round 1 rebid, based on our round 1 experience we anticipate fewer bids. For the 2007 round 1 of the competitive bidding program, we received approximately 6,500 bids. Therefore, the total estimated burden associated with the round 1 rebid is approximately 442,000 hours (68 hours X 6,500).

B. ICRs Regarding Disclosure of Subcontracting Arrangements

Section 414.422(f) states that suppliers entering into a contract with CMS must disclose information on each subcontracting arrangement that the supplier has to furnish items and services under the contract and whether each subcontractor meets the accreditation requirements in § 424.57, if applicable. Section 414.422(f) also requires that the required disclosure be made no later than 10 days after the date a supplier enters into a contract with CMS or 10 days after a supplier enters into a subcontracting arrangement after entering into a contract with CMS.

The burden associated with the requirements in § 414.422(f) are the time and effort necessary to disclose the information to CMS. In the 2007 Round 1 competition, there were 329 winning suppliers. Therefore, we approximate fewer than 400 winning suppliers for the Round 1 rebid. Also, we estimate it will take each of the winning suppliers that use subcontractors on average approximately 1.5 hours to submit information on each subcontracting arrangement to furnish items and services under the contract and whether each subcontractor meets the accreditation requirements in § 424.57, if applicable. Those that do not use subcontractors will not have a reporting burden. The total estimated burden associated with these requirements is approximately 600 hours (1.5 hours X 400 winning suppliers).

If you comment on these information collection and recordkeeping requirements, please do either of the following:

1. Submit your comments electronically as specified in the **ADDRESSES** section of this proposed rule; or

2. Mail copies to the address specified in the **ADDRESSES** section of this proposed rule and to the Office of Information and Regulatory Affairs, Office of Management and Budget, 725 17th Street, NW., Room 10235, Washington, DC 20503, Attn: CMS Desk Officer, Fax (202) 395–6974, E-mail: *OIRA_submission@omb.eop.gov*.

VII. Regulatory Impact Statement

We have examined the impacts of this rule as required by Executive Order 12866 on Regulatory Planning and Review (September 30, 1993, as further amended), the Regulatory Flexibility Act (RFA) (September 19, 1980, Pub. L. 96–354), section 1102(b) of the Social Security Act, section 202 of the Unfunded Mandates Reform Act of 1995 (Pub. L. 104–4), and Executive Order 13132.

Executive Order 12866, as amended, directs agencies to assess all costs and benefits of available regulatory alternatives and, if regulation is necessary, to select regulatory approaches that maximize net benefits (including potential economic, environmental, public health and safety effects, distributive impacts, and equity). A regulatory impact analysis (RIA) must be prepared for major rules with economically significant effects ($100 million or more in any 1 year). The provisions of this rule only implement limited changes to how the program will be implemented and will not result in a change in expenditures of $100 million or more annually, and is therefore not a major rule as defined in Title 5, United States Code, section 804(2) and is not an economically significant rule under Executive Order 12866.

As stated in section I.B. of this preamble, section 154 of the MIPPA amended section 1847 of the Act to make limited changes to the Medicare DMEPOS Competitive Bidding Program. This regulation merely incorporates limited statutory changes to the Medicare DMEPOS Competitive Bidding Program and does not change the fundamental requirements of the program. In addition, a regulatory impact is unnecessary due to previous regulatory action taken when implementing the competitive bidding program, as described in the May 1, 2006 **Federal Register** (72 FR 25654) proposed rule. Specifically, this rule cites the new timeframes for competition to occur under the program. In addition, the rule implements the MIPPA provisions that mandate limited changes that affect competition under the program including a process for providing feedback to suppliers regarding missing financial documentation, requiring contractors to disclose to CMS information regarding subcontracting relationships, and exempting from competitive bidding certain items and services.

The MIPPA also mandated a 9.5 percent reduction in payment for all items and services that were competitively bid during the round of competition in 2008 regardless of any exclusion such as group 3 complex rehabilitative wheelchairs. The 9.5 percent reduction in payment was completed through the standard process for covered item updates rather than through this rule. Because we are not implementing the 9.5 percent reduction in payment in this rule and the provisions of this rule do not change the fundamentals of this program, and 9.5 percent reduction in payment is not included in this rule, we have determined that a full regulatory impact analysis is unnecessary. Because the statute rather than the regulation is imposing a 9.5 reduction in payment, this rule is not a major rule.

The RFA requires agencies to analyze options for regulatory relief of small businesses. For purposes of section 604 of the RFA, small entities include small businesses, non-profit organizations and government agencies. Individuals and States are not included in the definition of a small entity. Based on data from the Small Business Administration (SBA), we estimate that 85 percent of suppliers of the items and services affected by this rule would be defined as small entities with total revenues of $6.5 million or less in any 1 year. This regulation merely codifies the MIPPA provisions, so there are no options for regulatory relief for small suppliers. The RFA therefore does not require that we analyze regulatory options for small businesses.

In addition, section 1102(b) of the Act requires us to prepare a regulatory impact analysis if a rule may have a significant impact on the operations of a substantial number of small rural hospitals. This analysis must conform to the provisions of section 604 of the RFA. For purposes of section 1102(b) of the Act, we define a small rural hospital as a hospital that is located outside of a Metropolitan Statistical Area and has fewer than 100 beds. We have determined that this rule will not have a significant impact on a substantial number of small entities and on small rural hospitals.

Section 202 of the Unfunded Mandates Reform Act of 1995 also requires that agencies assess anticipated costs and benefits before issuing any rule that may result in an expenditure

in any year by State, local or tribal governments, in the aggregate, or by the private sector, of $100 million. The $100 million in 1995 dollars is updated annually for inflation and the current expenditure threshold is approximately $130 million. This rule will not have an effect on the governments mentioned, and the private sector costs would be less than the $130 million per year threshold. Hence, the Unfunded Mandates Reform Act of 1995 would not apply.

Lastly, Executive Order 13132 establishes certain requirements that an agency must meet when it promulgates a proposed rules (and subsequent final rule) that imposes substantial direct requirement costs on State and local governments, preempts State law, or otherwise has Federalism implications. We have determined that this rule will not have a significant effect on the rights, roles and responsibilities of States.

In accordance with the provisions of Executive Order 12866, this regulation was reviewed by the Office of Management and Budget.

List of Subjects in 42 CFR Part 414

Administrative practice and procedure, Health facilities, Health professions, Kidney diseases, Medicare Reporting and recordkeeping requirements.

■ For the reasons set forth in the preamble, the Centers for Medicare & Medicaid Services amends 42 CFR chapter IV as set forth below:

PART 414—PAYMENT FOR PART B MEDICAL AND OTHER HEALTH SERVICES

■ 1. The authority citation for part 414 continues to read as follows:

Authority: Secs. 1102, 1871, and 1881(b)(1) of the Social Security Act (42 U.S.C. 1302, 1395hh, and 1395rr(b)(1)).

Subpart F—Competitive Bidding for Certain Durable Medical Equipment, Prosthetics, Orthotics, and Supplies (DMEPOS)

■ 2. Section 414.402 is amended by—

■ A. Revising the introductory text of paragraph (1) of the definition of ''item.''

■ B. Adding the definitions of ''covered document'', ''covered document review date'' and ''hospital''.

§ 414.402 Definitions.

* * * * *

Covered document means a financial, tax, or other document required to be submitted by a bidder as part of an original bid submission under a competitive acquisition program in order to meet the required financial standards.

Covered document review date means the later of—

(1) The date that is 30 days before the final date for the closing of the bid window; or

(2) The date that is 30 days after the opening of the bid window.

Hospital has the same meaning as in section 1861(e) of the Act.

Item * * *

(1) Durable medical equipment (DME) other than class III devices under the Federal Food, Drug and Cosmetic Act, as defined in § 414.202 of this part and group 3 complex rehabilitative wheelchairs and further classified into the following categories:

* * * * *

■ 3. Section 414.404 is amended by revising paragraphs (b)(1) introductory text, (b)(1)(ii), and (b)(1)(iii) to read as follows:

§ 414.404 Scope and applicability.

* * * * *

(b) * * *

(1) Physicians, treating practitioners, and hospitals may furnish certain types of competitively bid durable medical equipment without submitting a bid and being awarded a contract under this subpart, provided that all of the following conditions are satisfied:

* * * * *

(ii) The items are furnished by the physician or treating practitioner to his or her own patients as part of his or her professional service or by a hospital to its own patients during an admission or on the date of discharge.

(iii) The items are billed under a billing number assigned to the hospital, physician, the treating practitioner (if possible), or a group practice to which the physician or treating practitioner has reassigned the right to receive Medicare payment.

* * * * *

■ 4. Section 414.408 is amended by revising paragraph (e)(2)(iv) to read as follows:

§ 414.408 Payment rules.

* * * * *

(e) * * *

(2) * * *

(iv) A physician, treating practitioner, physical therapist in private practice, occupational therapist in private practice, or hospital may furnish an item in accordance with § 414.404(b) of this subpart.

* * * * *

■ 5. Section 414.410 is amended by revising paragraph (a) as follows:

§ 414.410 Phased-in implementation of competitive bidding programs.

(a) *Phase-in of competitive bidding programs.* CMS phases in competitive bidding programs so that competition under the programs occurs—

(1) In CY 2009, in Cincinnati—Middletown (Ohio, Kentucky and Indiana), Cleveland—Elyria—Mentor (Ohio), Charlotte—Gastonia—Concord (North Carolina and South Carolina), Dallas—Fort Worth—Arlington (Texas), Kansas City (Missouri and Kansas), Miami—Fort Lauderdale—Miami Beach (Florida), Orlando (Florida), Pittsburgh (Pennsylvania), and Riverside—San Bernardino—Ontario (California).

(2) In CY 2011, the additional 70 MSAs selected by CMS as of June 1, 2008.

(3) After CY 2011, additional CBAs (or, in the case of national mail order for items and services, after CY 2010).

* * * * *

■ 6. Section 414.414 is amended by revising paragraph (c) and (d) as follows:

§ 414.414 Conditions for awarding contracts.

* * * * *

(c) Quality standards and accreditation. Each supplier furnishing items and services directly or as a subcontractor must meet applicable quality standards developed by CMS in accordance with section 1834(a)(20) of the Act and be accredited by a CMS-approved organization that meets the requirements of § 424.58 of this subchapter, unless a grace period is specified by CMS.

(d) *Financial standards.*

(1) *General rule.* Each supplier must submit along with its bid the applicable covered documents (as defined in § 414.402) specified in the request for bids.

(2) *Process for reviewing covered documents.*

(i) *Submission of covered documents for CMS review.* To receive notification of whether there are missing covered documents, the supplier must submit its applicable covered documents by the later of the following covered document review dates:

(A) The date that is 30 days before the final date for the closing of the bid window; or

(B) The date that is 30 days after the opening of the bid window.

(ii) *CMS feedback to a supplier with missing covered documents.*

(A) *For Round 1 bids.* CMS has up to 45 days after the covered document review date to review the covered documents and to notify suppliers of any missing documents.

(B) *For subsequent Round bids.* CMS has 90 days after the covered document review date to provide notify suppliers of any missing covered documents.

(iii) *Submission of missing covered documents.* Suppliers notified by CMS of missing covered documents have 10 business days after the date of such notice to submit the missing documents. CMS does not reject the supplier's bid on the basis that the covered documents are late or missing if all the applicable missing covered documents identified in the notice are submitted to CMS not later than 10 business days after the date of such notice.

* * * * *

■ 7. Section 414.422 is amended by—

■ A. Redesignating paragraph (f) as paragraph (g).

■ B. Adding a new paragraph (f).

The addition reads as follows:

§ 414.422 Terms of contracts.

* * * * *

(f) *Disclosure of subcontracting arrangements.*

(1) *Initial disclosure.* Not later than 10 days after the date a supplier enters into a contract under this section the supplier must disclose information on both of the following:

(i) Each subcontracting arrangement that the supplier has in furnishing items and services under the contract.

(ii) Whether each subcontractor meets the requirement of section 1834(a)(20)(F)(i) of the Act if applicable to such subcontractor.

(2) *Subsequent disclosure.* Not later than 10 days after the date a supplier enters into a subcontracting arrangement subsequent to contract award with CMS, the supplier must disclose information on both of the following:

(i) The subcontracting arrangement that the supplier has in furnishing items and services under the contract.

(ii) Whether the subcontractor meets the requirement of section 1834(a)(20)(F)(i) of the Act, if applicable to such subcontractor.

* * * * *

(Catalog of Federal Domestic Assistance Program No. 93.778, Medical Assistance Program)

(Catalog of Federal Domestic Assistance Program No. 93.773, Medicare—Hospital Insurance; and Program No. 93.774, Medicare—Supplementary Medical Insurance Program)

Dated: November 13, 2008.

Kerry Weems,

Acting Administrator, Centers for Medicare & Medicaid Services.

Approved: December 5, 2008.

Michael O. Leavitt,

Secretary.

[FR Doc. E9–863 Filed 1–15–09; 8:45 am]

BILLING CODE 4120–01–P

DEPARTMENT OF HEALTH AND HUMAN SERVICES

Centers for Medicare & Medicaid Services

42 CFR Parts 423

[CMS 4138–IFC4]

RIN 0938–AP24

Medicare Program: Medicare Advantage and Prescription Drug Programs MIPPA Drug Formulary & Protected Classes Policies

AGENCY: Centers for Medicare & Medicaid Services (CMS), HHS.

ACTION: Interim final rule with comment period.

SUMMARY: This interim final rule with comment period revises the regulations governing the Medicare prescription drug benefit program (Part D). This regulation makes conforming changes to reflect revisions to the rules governing Part D that were made as a result of provisions in the Medicare Improvements for Patients and Providers Act (MIPPA), which became law on July 15, 2008. These MIPPA provisions change the definition of a covered Part D drug, and add new requirements that apply to Part D formularies.

DATES: *Effective date:* These regulations are effective January 16, 2009.

Comment date: To be assured consideration, comments must be received at one of the addresses provided below, no later than 5 p.m. on March 17, 2009.

ADDRESSES: In commenting, please refer to file code CMS–4138–IFC4. Because of staff and resource limitations, we cannot accept comments by facsimile (FAX) transmission.

You may submit comments in one of four ways (please choose only one of the ways listed)

1. *Electronically.* You may submit electronic comments on specific issues in this regulation to *http://www.regulations.gov.* Follow the instructions for ''Comment or Submission'' and enter the file code to find the document accepting comments.

2. *By regular mail.* You may mail written comments (one original and two copies) to the following address ONLY: Centers for Medicare & Medicaid Services, Department of Health and Human Services, Attention: CMS–4138–IFC4, P.O. Box 8016, Baltimore, MD 21244–8016.

Please allow sufficient time for mailed comments to be received before the close of the comment period.

3. *By express or overnight mail.* You may send written comments (one original and two copies) to the following address ONLY: Centers for Medicare & Medicaid Services, Department of Health and Human Services, Attention: CMS–4138–IFC4, Mail Stop C4–26–05, 7500 Security Boulevard, Baltimore, MD 21244–1850.

4. *By hand or courier.* If you prefer, you may deliver (by hand or courier) your written comments (one original and two copies) before the close of the comment period to either of the following addresses:

a. Room 445–G, Hubert H. Humphrey Building, 200 Independence Avenue, SW., Washington, DC 20201;

(Because access to the interior of the HHH Building is not readily available to persons without Federal Government identification, commenters are encouraged to leave their comments in the CMS drop slots located in the main lobby of the building. A stamp-in clock is available for persons wishing to retain a proof of filing by stamping in and retaining an extra copy of the comments being filed.)

b. 7500 Security Boulevard, Baltimore, MD 21244–1850.

If you intend to deliver your comments to the Baltimore address, please call telephone number (410) 786–7195 in advance to schedule your arrival with one of our staff members.

Comments mailed to the addresses indicated as appropriate for hand or courier delivery may be delayed and received after the comment period.

For information on viewing public comments, see the beginning of the **SUPPLEMENTARY INFORMATION** section.

FOR FURTHER INFORMATION CONTACT: Alissa DeBoy at (410) 786–6041)or Vanessa Duran at (410)786–8697.

SUPPLEMENTARY INFORMATION:

Inspection of Public Comments: All comments received before the close of the comment period are available for viewing by the public, including any personally identifiable or confidential business information that is included in a comment. We post all comments received before the close of the comment period on the following Web site as soon as possible after they have

been received: *http://regulations.gov. Follow the search instructions* on that Web site to view public comments.

Comments received timely will be also available for public inspection as they are received, generally beginning approximately 3 weeks after publication of a document, at the headquarters of the Centers for Medicare & Medicaid Services, 7500 Security Boulevard, Baltimore, Maryland 21244, Monday through Friday of each week from 8:30 a.m. to 4 p.m. To schedule an appointment to view public comments, phone 1–800–743–3951.

I. Background

The Medicare Prescription Drug, Improvement, and Modernization Act of 2003 (MMA) (Pub. L. 108–173) was enacted on December 8, 2003. Section 101 of title I of the MMA added a new ''Part D'' to title XVIII of the Social Security Act (the Act), creating the Medicare prescription drug benefit program. The prescription drug benefit program is one of the most significant changes to the Medicare program since its inception in 1965. The MMA also made revisions to the provisions in Medicare Part C, governing what is now called the Medicare Advantage (MA) program (formerly Medicare+Choice). The MMA directed that important aspects of the new Medicare prescription drug benefit program under Part D be similar to and coordinated with regulations for the MA program.

A final rule implementing the Part D prescription drug program appeared in the **Federal Register** on January 28, 2005 (70 FR 4194). The provisions of that rule became effective on March 22, 2005.

The Medicare Improvements for Patients and Providers Act (MIPPA) (Pub. L. 110–275) was enacted on July 15, 2008. MIPPA made a number of changes to the statutory provisions governing both the MA program under Part C and the prescription drug program under Part D. On September 18, 2008, we published an interim final rule with comment period that made a wide array of revisions to regulations governing the Part C and Part D programs to reflect changes in the statutory provisions governing these programs made in MIPPA [see 73 FR 54226]. This interim final rule with comment period similarly makes conforming changes to the Part D regulations to reflect certain statutory changes made in MIPPA that were not addressed in the September 18, 2008 interim final rule.

II. Provisions of the Interim Final Rule

A. Medically Accepted Indication (§ 423.100 Definitions)

Section 182 of MIPPA amends section 1860D–2(e)(1) of the Act to add a new definition for ''medically accepted indication,'' effective January 1, 2009, for Part D drugs used in anticancer chemotherapeutic regimens, specifically, and all other Part D drugs. Under new section 1860D–2(e)(4) of the Act, a ''medically accepted indication'' for Part D drugs used in anticancer chemotherapeutic regimens has the meaning given in section 1861(t)(2)(B) of the Act, except that in applying the 1861(t)(2)(B) definition, the terms ''prescription drug plan'' or ''MA–PD plan'' are substituted for ''carrier,'' and the compendia described in section 1927(g)(1)(B)(i)(III) of the Act are added to those listed in section 1861(t)(2)(B)(ii)(I) of the Act. Also, on and after January 1, 2010, this last requirement shall not apply unless the compendia described in section 1927(g)(1)(B)(i)(III) of the Act meets the requirement in the third sentence of section 1861(t)(2)(B) of the Act.

Also under section 182 of MIPPA, for all Part D drugs not used in anticancer chemotherapeutic regimens, ''medically accepted indication'' has the meaning given in section 1927(k)(6) of the Act, except that in applying this provision, the Secretary shall revise the list of compendia described in section 1927(g)(1)(B)(i) of the Act as appropriate for identifying medically accepted indications for drugs, in a manner consistent with the process for revising compendia under section 1861(t)(2)(B) of the Act.

Consistent with these new statutory requirements, we have amended § 423.100 by revising the definition of a Part D drug at § 423.100 to incorporate the new definition of medically accepted indication in section 1860D–2(e)(4) of the Act.

B. Access to Covered Part D Drugs (§ 423.120)

Section 176 of MIPPA added a new section 1860D–4(b)(3)(G)(i) to the Act requiring, effective for plan year 2010, that CMS identify, as appropriate, certain categories or classes of drugs which meet the following two pronged test: (1) Restricted access to the drugs in the category or class would have major or life threatening clinical consequences for individuals who have a disease or disorder treated by drugs in such category or class; and (2) there is a significant need for such individuals to have access to multiple drugs within a category or class due to unique chemical actions and pharmacological effects of the drugs within the category or class, such as drugs used in the treatment of cancer.

Under a new section 1860D–4(b)(3)(G)(ii) of the Act, subject to the authority in section 1860D–4(b)(3)(G)(iii) of the Act to provide for exceptions, Part D formularies must include all covered Part D drugs in each class identified under section 1860D–4(b)(3)(G)(i) of the Act. Section 1860D–4(b)(3)(G)(iii), in turn, provides CMS the discretion to establish exceptions permitting sponsors of a prescription drug plan to exclude from their formularies, or to otherwise limit access to (including through prior authorization or other utilization management restrictions), certain Part D drugs from the protected categories and classes established consistent with section 1860D–4(b)(3)(G)(i) of the Act. As provided in section 1860D–4(b)(3)(G)(iii)(I) of the Act, any such exception must be based on scientific evidence and medical standards of practice (and, in the case of antitretroviral medications, be consistent with the Department of Health and Human Services Guidelines for the Use of Antitretroviral Agents in HIV–1–Infected Adults and Adolescents). In addition, as provided in section 1860D–4(b)(3)(G)(iii)(II) of the Act, such exceptions must be provided under a process that includes an opportunity for public notice and comment. We have added § 423.120(b)(2)(v) to reflect the new formulary requirements in section 1860D–4(b)(3)(G) of the Act.

Based on our program experience, and consistent with our formulary review process, we plan to conduct an examination, described below, of widely used treatment guidelines in order to establish protected categories and classes for Part D sponsors that meet the requirements established by section 1860D–4(b)(3)(G) of the Act. Additionally, consistent with section 1860D–4(b)(3)(G)(iii) of the Act and § 423.120(b)(2)(v) of this interim final rule, we may establish exceptions to the requirement that Part D sponsors include all Part D drugs in the protected categories and classes. Given the complexity involved in modern medicine and changes in drug therapies with availability of new information reaching providers almost daily, we anticipate that exceptions to our regulatory requirements will be necessary. For example, we believe that in certain circumstances the application of prior authorization may be appropriate to ensure use of Part D drugs in line with medically necessary

indications. As described below, we will therefore establish exceptions to the protected categories and classes through notice-and-comment rulemaking to ensure that they are established in a manner that provides for meaningful public input, in a fully transparent manner (in which we will formally respond to the public comments), that also enables us to meet operational timeframes.

We note that Part D sponsors may apply edits to make appropriate coverage determinations for drugs included in the protected classes that may be covered under Medicare Part B. Until the Part D sponsor is able to affirm there is no Part B reimbursement, we do not consider the definition of a Part D drug to be satisfied. Furthermore, the limitation of drug utilization management relating to drugs in the protected classes does not extend to the application of safety edits. Part D sponsors and their subcontracted network pharmacies must apply established safety edits to drugs from the protected classes to ensure their enrollees are not harmed by inadvertent medication errors.

We also note that, as stated in our January 28, 2005 Part D final rule (70 FR 4194, 4260), inclusion of ''all covered Part D drugs'' from a protected class or category does not extend to inclusion of all brand-name drugs and generic versions of the covered drug in question. Under our longstanding interpretation of the term ''covered Part D drug,'' Part D sponsors will only be required to include on their formularies all chemically distinct drugs from the protected classes or categories in order to the meet the provisions of § 423.120(b)(2)(v). We have consistently held that two drug products that are determined to be therapeutic equivalents by the Food and Drug Administration (FDA) and identified as such in the FDA's Orange Book are considered to be the same Part D ''drug.'' (According to the Orange Book: ''Drug products are considered to be therapeutic equivalents only if they are pharmaceutical equivalents and if they can be expected to have the same clinical effect and safety profile when administered to patients under the conditions specified in the labeling.'') Thus, therapeutic equivalents are not counted twice for purposes of satisfying the CMS minimum formulary requirements.

In planning for the implementation of section 1860D–4(b)(3)(G) of the Act, we note that we have gained valuable experience since 2006 in evaluating various drug classification systems and ensuring that Medicare beneficiaries reliant on drugs contained in certain categories or classes are neither substantially discouraged from enrolling in a Part D plan nor experience unnecessary complications related to accessing these drugs. Our experience has provided insight into the type of evaluation process that will be required to ensure that the classes and categories of drugs we are protecting are appropriate. In this rule, below, we describe our current thinking on the process we believe will allow us to most appropriately identify the classes and categories of drugs that should be protected. We would welcome comments on this process.

We believe that it is necessary to establish a multi-level review process to ensure that we are appropriately identifying classes or categories that meet the criteria set forth in section 1860D–4(b)(3)(G)(i) of the Act. Under this multi-level process, we are planning on conducting an initial analysis that is predominantly research and data driven, followed by a secondary clinical analysis that will serve as a validation review. Both processes will involve the identification of potential exceptions to the protected categories or classes provision.

We plan on initiating the first-level review by selecting a contractor familiar with our CMS Part D formulary process. This contractor will review all the widely used treatment guidelines and generate a list highlighting those categories or classes in which multiple drugs within classes or categories are typically used to treat a specific disorder. Simultaneously, CMS will provide information to the contractor on beneficiary utilization of multiple drugs within categories and classes based on analysis of prescription drug event (PDE) data. The contractor will relate these findings to the information obtained from the examination of widely used treatment guidelines.

For the second level validation, an expert panel of physicians and pharmacists will be organized to review the initial data developed from the contractor and offer recommendations based on a consensus opinion on the identification of protected categories and classes under the statute. Information regarding the independence, potential conflicts of interest, expertise, and balance of the individuals chosen to participate in this expert panel will be made publicly available.

We firmly believe an expert panel can assist us in appropriately weighing the data derived from the initial analysis against the statutory requirements to identify protected categories or classes of drugs in which ''access to multiple drugs within a category or class'' is needed and in which ''major or life threatening clinical consequences'' may arise if access is restricted. Furthermore, we believe the expert panel will be well positioned to consider the data suggesting possible exceptions and overlay this with the protected categories or classes in order to identify exceptions that are based upon available scientific evidence and medical standards of practice. These exceptions will be subject to notice and comment as previously described.

The results from the panel on the protected classes and exceptions will then be published in the **Federal Register** in a notice of proposed rulemaking seeking public comment, to be followed by the issuance of a final rule that responds to the public's comments. We believe that reliance on the rulemaking process will better facilitate openness and transparency of the process for identifying, as appropriate, classes and categories of drugs that meet the MIPPA criteria.

Given the contracting activities and subsequent extensive analysis necessary for reviewing all widely used treatment guidelines relative to the requirements of section 1860D–4(b)(3)(G)(i) of the Act, as well as commonly-used drug classification systems, we have determined that we will be unable to complete a full evaluation of what constitutes a protected category or class under the criteria set forth in section 1860D–4(b)(3)(G)(i) of the Act in time for the 2010 plan year, as this would require that we hire a contractor, convene an expert panel, and go through notice of proposed and final rulemaking prior to April 2009, when Part D sponsors are required to submit their formularies. Therefore, although the new regulation text at 42 CFR 423.120(b)(2)(v) states that ''Effective contract year 2010,'' formularies must include all Part D drugs in the categories or classes CMS has identified as meeting the MIPPA criteria, in practice, CMS will not have identified any such categories or classes for the contract year 2010.

Rather, for 2010, given the timeframes discussed above, as well as the need to ensure consistency in formulary coverage as we complete our analysis to implement the requirements of section 1860D–4(b)(3)(G)(i) of the Act, in the meantime we will retain our existing six classes of clinical concern contained in Chapter 6 of the Medicare Prescription Drug Benefit Manual (section 30.2.5), which were incorporated into the Manual under the statutory authority set out in section 1860D–11(e)(2)(D)(i) of

the Act. Accordingly, Part D sponsors will continue to be expected to include all or substantially all drugs in the antidepressant, antipsychotic, and anticonvulsant classes, immunosuppressant (for prophylaxis of organ transplant rejection), antiretroviral, and antineoplastic (those not generally covered under Part B) drugs for coverage year 2010. We are retaining the policy providing for coverage of all or substantially all drugs in these six classes under our existing authority in section 1860D–11(e)(2)(D)(i) of the Act in order to ensure that Part D sponsors do not discriminate against any class of beneficiary by substantially discouraging enrollment.

For contract years 2011 and beyond, any modifications we make to the protected categories and classes, whether under the existing MMA non-discrimination authority or new authority under MIPPA, will be made through notice-and-comment rulemaking. Specifically, prior to establishing the protected categories and classes under the new MIPPA authority, CMS will (i) engage in an identification and validation process, such as the process described above and (ii) engage in a process of notice and comment rulemaking for any modifications (including any additions, subtractions, or exceptions) to the protected categories and classes under the MIPPA authority. In such rulemaking, or a separate rulemaking, we may further articulate our interpretation of the new statutory criteria. We believe that asking for (and responding to) public comment on results from the contractor and expert panel will better facilitate openness and transparency of the process for identifying, as appropriate, classes and categories of drugs that meet the MIPPA criteria.

Similarly, if CMS makes modifications to the existing protected categories and classes under the MMA authority (i.e., the existing six classes of clinical concern), we will (i) engage in an identification and validation process, such as the process described above and (ii) engage in notice and comment rulemaking for any such modifications (including any additions, subtractions, or exceptions). Any such rulemaking may also further articulate our interpretation of the statutory language at section 1860D–11(e)(2)(D)(i) of the Act. This process will mirror the process for establishing the protected categories and classes under the new MIPPA authority. Soliciting, and responding to, public comment on results from the contractor and expert panel will increase the openness and transparency of the process for protecting classes and categories of drugs under the MMA non-discrimination authority.

In the past, we have used annual Call Letters and other guidance memorandums to announce the policy of expecting plan sponsors to cover ''all or substantially all'' drugs in the six classes of clinical concern. We announced the policy to ensure that enrollees had as smooth of a transition as possible into the Part D program. We also wanted to minimize potential beneficiary concern about access to drugs in the six protected classes and categories.

However, we now have much more experience with Part D since the program started in January 2006. Thus, we are in a better position to consider drug categories and classes that should receive protection either under MIPPA or the MMA. Further, the public now has greater experience with a fully implemented Part D program and can provide more comprehensive comments on our continuing considerations about the program.

Hence, CMS has decided that any modifications to the current six categories and classes, whether under MIPPA or the MMA authority, will go through the process described above that includes notice of proposed and final rulemaking. The rulemaking process will provide for more transparency in the process of identifying protected categories and classes, enabling the public to comment on how modifications to the current six classes will impact various stakeholders, including beneficiaries, beneficiary advocates, plan sponsors, contractors of plan sponsors, and governmental entities, among others.

In addition, CMS believes that identifying protected classes and categories in the Code of Federal Regulations will provide greater clarity and transparency about those drug classes that are protected.

III. Waiver of Proposed Rulemaking and Delay in Effective Date

We ordinarily publish a notice of proposed rulemaking in the **Federal Register** and invite public comment on the proposed rule. The notice of proposed rulemaking includes a reference to the legal authority under which the rule is proposed, and the terms and substances of the proposed rule or a description of the subjects and issues involved. This procedure can be waived; however, if an agency finds good cause that a notice and comment procedure is impracticable, unnecessary, or contrary to the public interest and incorporates a statement of the finding and its reasons in the rule issued. We also usually provide for a delay in effective date under section 553(d) of the APA (5 U.S.C. 553(d), as well as section 801(a)(3) of the Congressional Review Act (5 U.S.C. 801(a)(3)) (when applicable). However, such delay in effective date may be waived for good cause, when such delay is impracticable, unnecessary, or contrary to the public interest, and the agency incorporates a statement of the finding and a brief statement of the reasons therefore in the notice. 5 U.S.C. 553(d)(3), 808(2). Because this interim final rule simply makes conforming changes to the Code of Federal Regulations to reflect changes in the statute, we find it would be unnecessary and contrary to the public interest to seek public comment on these provisions. For the same reasons, we also find that it would be unnecessary and contrary to the public interest to delay the effective date of such provisions beyond January 16, 2009.

IV. Collection of Information Requirements

This document does not impose any new information collection and recordkeeping requirements. Currently approved and forthcoming controls account for any collection of information burden relative to the provisions of this interim final rule, as outlined below.

Section 423.120 Formulary Requirements

Section 423.120(b)(2)(v) requires Part D sponsors to include in their contract year 2010 formularies all drugs in certain protected categories of classes of drugs specified by CMS, with certain exceptions that CMS establishes.

The burden associated with this requirement is the time and effort put forth by Part D sponsors to submit their formularies to CMS. These collection of information requirements are currently approved under the Office of Management and Budget (OMB) Control No. 0938–0763.

V. Regulatory Impact Analysis

A. Overall Impact

We have examined the impacts of this rule as required by Executive Order 12866 on Regulatory Planning and Review (September 30, 1993, as further amended), the Regulatory Flexibility Act (RFA) (September 19, 1980, Pub. L. 96–354), section 1102(b) of the Social Security Act, section 202 of the Unfunded Mandates Reform Act of 1995 (Pub. L. 104–4), Executive Order 13132 on Federalism (August 4, 1999), and the

Congressional Review Act (5 U.S.C. 804(2)).

Executive Order 12866, as amended, directs agencies to assess all costs and benefits of available regulatory alternatives and, if regulation is necessary, to select regulatory approaches that maximize net benefits (including potential economic, environmental, public health and safety effects, distributive impacts, and equity). A regulatory impact analysis (RIA) must be prepared for major rules with economically significant effects ($100 million or more in any 1 year). We estimate that this interim final rule with comment is economically significant under the Executive Order 12866, as it contains impacts of $100 million or more in any one year, and hence also a major rule under the Congressional Review Act.

The RFA requires agencies to analyze options for regulatory relief of small businesses, if a rule has a significant impact on a substantial number of small entities. For purposes of the RFA, small entities include small businesses, nonprofit organizations, and small governmental jurisdictions. Most hospitals and most other providers and supplies are small entities, either by nonprofit status or by having revenues of $7 million or less to $34.5 million in any 1 year. Individuals and States are not included in the definition of a small entity.

We estimate that the coverage of all drugs by Part D sponsors from the CMS-established protected classes or categories to have a cost impact to the federal budget in an amount exceeding $100 million for any given calendar year (CY). Table 1 provides the costs associated with these provisions for CY 2010 through CY 2018. The assumptions underlying these cost estimates are explained later in this section.

With respect to economic benefits, we have no reliable basis for estimating the effects of the proposals contained in this IFC. Accordingly, we estimate that while there could be economic benefits associated with these proposals, they are difficult to gauge at this time.

The economically significant costs are reflected below in table 1.

TABLE 1—PROJECTED PART D COSTS FOR CY 2010—CY 2018

[Amounts in $ millions]

	CY 2010	CY 2011	CY 2012	CY 2013	CY 2014	CY 2015	CY 2016	CY 2017	CY 2018	CY 2010–2018
Formulary requirements with respect to certain categories or classes of drugs	0	160	340	460	520	570	640	710	800	4200

We note that the change in the definition of a Part D drug to revise the meaning of the term ''medically accepted indication,'' as provided under section 1860D–2(e)(4) of the Act, was scored at zero additional cost to the program. Most of the anticancer chemotherapeutic regimens utilized by Medicare beneficiaries are covered under Part B, and while this new provision may extend coverage for anticancer therapeutic regimens under Part D, we believe the number of Part D drugs claims impacted by this change will be minimal. Therefore, we do not expect that this provision will significantly impact program costs.

a. Regulatory Flexibility Analysis

Under the RFA, we are not required to conduct an initial regulatory flexibility analysis for interim final rules. However, it is our longstanding policy to provide an analysis whenever we believe it would aid in the understanding of the effects of the interim final rule with comment.

The RFA requires agencies to determine whether a rule will have a ''significant economic impact on a substantial number of small entities.'' Under the RFA, a ''small entity'' is defined as a small business (as determined by the Small Business Administration (SBA)), a non-profit entity of any size that is not dominant in its field, or a small government jurisdiction. HHS uses its measure of a significant economic impact on a substantial number of small entities to be a change in revenues of more than 3 to 5 percent.

With respect to the provisions contained in this interim final rule, we believe only retail pharmacies which are small businesses will be impacted. Other small businesses, such as physicians in private practice or small businesses that deliver prescriptions to beneficiaries, will be unaffected by this interim final rule since there is no direct impact to their operations or profitability. For example, private physicians will generally continue to follow current prescribing practices regardless of Part D formularies. Small delivery businesses will continue to deliver the same number of prescriptions regardless of the drug name or formulary inclusion.

The Small Business Administration (SBA) considers pharmacies with firm revenues less than $7 million to be small businesses. The 2004 Business Census (the latest available detailed data) indicated that there were approximately 19,443 firms operating about 40,115 retail pharmacies and drug store establishments (NAICS code 44611). Of these firms, 17,835 had revenues under $7 million and operated a total of 17,835 establishments. As a result, we estimate that more than 90 percent of retail pharmacy firms are small businesses (as defined by the SBA size standards).

We do not believe that retail pharmacies would be significantly impacted by the requirement for Part D sponsors to include all drugs in protected classes or categories specified by CMS. While the number of brand name drugs dispensed in these categories may increase, we do not think there will be a substantial increase in overall retail pharmacy profits. Retail pharmacies may incur some limited costs relative to this provision, since they may need to inventory more drugs within these classes given that Part D sponsors may not be able to concentrate volume on lower cost salts, esters and active moieties.

As previously discussed, the other change contained in this interim final rule is not expected to affect small businesses in a significant manner, if at all. For example, section 182 of the MIPPA requires modification to the definition of a medically accepted indication for purposes of a Part D drug. While Part D sponsors will be expected to implement this new definition through their drug utilization management programs, small

businesses, such as retail pharmacies or physicians, will not require any changes to their existing operations. The application of drug utilization management is common in the commercial market, and small businesses already have processes (that is, administrative staff or pharmacy technicians) to supply the necessary information to address drug utilization management requirements. As a result, we do not anticipate any additional costs or burdens to be placed on other small businesses.

Section 1102(b) of the Social Security Act requires us to prepare a regulatory flexibility impact analysis if a rule may have a significant impact on the operations of a substantial number of small rural hospitals. This analysis must conform to the provisions of section 604 of the RFA. For purposes of section 1102(b) of the Act, we define a small rural hospital as a hospital that is located outside of a Metropolitan Statistical Area and has fewer than 100 beds. This interim final rule will not affect small rural hospitals since the program will be directed at outpatient prescription drugs, not drugs provided during a hospital stay. As required by law, prescription drugs provided during hospital stays are covered under a separate Medicare payment system. Therefore, we are not providing an analysis in this rule.

Section 202 of the Unfunded Mandates Reform Act of 1995 (UMRA) requires that agencies assess anticipated costs and benefits and take certain other actions before issuing a final rule that includes any Federal mandate that may result in expenditure in any one year by State, local, or tribal governments, in the aggregate, or by the private sector, of $100 million. That threshold, updated for inflation, is currently approximately $130 million. We anticipate that this interim final rule will not impose costs above the $130 million UMRA threshold on State, local, tribal governments, in the aggregate, or by the private sector.

Executive Order 13132 establishes certain requirements that an agency must meet when it issues a final rule that imposes substantial direct requirement costs on State and local governments, preempts State law, or otherwise has Federalism implications. The changes and additions contained in this interim final rule do not impose new costs on states or local governments.

There are no anticipated Federalism implications because none of the provisions contained in this interim final rule place any requirements on States.

B. Anticipated Effects on Health Plans and Pharmacy Benefit Managers (PBMs)

Part D sponsors will be significantly impacted by this IFC rule. For example, we believe that the new provision relative to the establishment of certain protected classes and categories of Part D drugs will have a significant impact on Part D sponsors, a class of beneficiaries and the Federal Government. This new provision requires that Part D sponsors include all drugs in protected classes and categories of drugs that CMS specifies as meeting both of the following conditions:

1. Restricted access to drugs in the category or class would have a major or life threatening clinical consequence.
2. A significant clinical need exists for individuals to have access to multiple drugs within a category or class due to unique chemical actions and pharmacological effects.

We expect these conditions will likely expand access to drugs for certain classes or categories and provide greater inclusion of manufacturers' drugs associated with those classes or categories in the Part D program. If additional drug classes and categories are required to be included on Part D sponsor formularies, Part D sponsors' costs could increase, since more drugs could need to be covered. Conversely, if fewer classes and categories are required to be included on Part D sponsors' formularies, Part D sponsors' costs could decrease, since less drugs could require coverage. Since we are only now beginning our examination of widely used treatment guidelines in order to establish the protected classes or categories that meet the aforementioned requirements, we estimate that this provision will add an additional $160 million to the cost of the Part D program in CY 2011. We believe this will increase to $800 million in CY 2018, with total costs of approximately $4.2 billion dollars for the period CY 2010 through CY 2018.

To arrive at the cost estimate for the implementation of the protected categories and classes, we began by putting drug spending into 3 groupings: (1) Drugs that were already included in the six classes of clinical concern; (2) drugs with a greater likelihood of being affected by this statutory change; and (3) drugs with a lesser likelihood of being affected by this statutory change. For each of these categories, we estimated the likelihood that they would ultimately be included in the protected categories and classes. A very preliminary review of commonly used classification systems revealed that additional categories and classes of drugs may be included in the protected categories and classes based upon the statutory requirements in section 1860D–4(b)(3)(G)(i) of the Act. We assumed that it would take several years for the full impact of this policy to take effect as new formulary requirements are fully implemented and manufacturers discover their new negotiating positions. Finally, we estimated the impact on drug expenditures for those drugs that could potentially be moved into protected categories or classes of drugs based on the statutory requirements. These impacts reflect our best estimates of a range of possibilities that cannot be more accurately projected until actual decisions are made.

There is a large amount of uncertainty in the cost impact presented above. As described above, the cost impact is calculated based on making a series of assumptions regarding potential classes that may become protected. It is possible that the actual number of classes that would be protected will be different than we've estimated. For example, if no classes beyond the current six become protected, there would be no cost impact at all. Alternatively, if a greater number of classes than we estimate become protected, the actual cost impact will be greater than presented above. Moreover, if this process only resulted in the elimination of the existing six classes, savings could accrue.

If additional categories and classes are included on Part D sponsor formularies as a result of the new statutory provisions, we expect sponsors' negotiating power to be diminished. If this were to occur, Part D sponsors could incur higher drug costs and could be forced to raise their bids, which could result in higher premiums and co-pays to offset these increases. We also anticipate that Part D sponsors could have additional costs associated with managing a larger overall formulary—for example, increased Pharmacy and Therapeutics Committee oversight and increased expenses in marketing more products on comprehensive formularies. Alternatively, however, the number of protected classes and categories meeting the MIPPA requirement could decline relative to the current six protected under the MMA authority. If this were the case, we expect Part D sponsors' negotiating power to increase. As a result, Part D sponsors could incur lower drug costs and could lower their bids, which could result in lower premiums and co-pays.

We are also uncertain at this time what exceptions to the requirement that Part D sponsor formularies include all

drugs in the protected categories and classes of drugs will be established by CMS. We anticipate establishing exceptions similar to those available under our existing six classes of clinical concern policy. It is possible we will establish fewer exceptions, and Part D sponsors may have to include more drugs on their formularies than current policy. However, it is also possible that we may establish more exceptions than current policy. We are also uncertain how Part D sponsors will be permitted to apply drug utilization management to drugs in the protected classes until we finalize the exceptions to the protected categories and classes requirement. We believe that if we are unable to permit Part D sponsors to apply meaningful utilization management to these drugs—even if only for beneficiaries initiating therapy in these categories or classes—the result could be an increased use of brand-name or higher cost drugs and an increase in costs overall. These costs could be reflected in bids submitted to CMS by Part D sponsors and could result in increased premiums for Medicare beneficiaries. We plan on working closely with all of our Part D sponsors as our guidance in this area develops to ensure they have the information they need to negotiate as efficiently as possible and continue to provide high quality prescription drug coverage at the most economical price.

Except for the potential impact of increased or decreased costs (that is, increased or decreased copayments and premiums) on beneficiaries, we do not believe that the implementation of the protected classes and categories requirement will negatively impact enrollment in Part D plans. We also do not believe that the provisions of this rule will lead to greater beneficiary confusion or any increased difficulty in making enrollment decisions. While increased copayments and premiums may dissuade some beneficiaries from enrolling in particular Part D plans, we continue to believe that overall enrollment will increase given demographic trends and the increasing cash prices for drugs. Accordingly, we believe Medicare beneficiaries will continue to find Part D to be a cost efficient method of obtaining robust drug coverage at a range of acceptable costs.

We also believe that PBMs could experience higher administrative costs as a result of the provisions contained in this rule. The protected classes provision may increase a number of formulary maintenance expenses ranging from managing a larger formulary to increased support of technical call centers to address requests for assistance in processing a wider range of covered drugs. As a result, PBMs may increase their fees to Part D sponsors to offset these increased costs. We do not believe these additional costs will negatively impact the PBM industry given its ability to pass these onto the Part D sponsors. Similar to our ongoing communications with our Part D sponsors, we intend to work closely with the PBM industry to ensure as much efficiency as possible and minimize any resulting increases in beneficiary costs.

C. Alternatives Considered

All of the provisions in this interim final rule are a result of the recent passage of the MIPPA and are largely self-implementing. With the publication of this interim final rule, we desire to make our implementing regulations available to industry and the public as soon as possible to facilitate continued, efficient operation of the Parts C and D programs.

D. Accounting Statement

As required by OMB Circular A–4 (available at *http://www.whitehouse.gov/omb/circulars/index.html*), Table 2 below provides an accounting statement showing the classification of the expenditures associated with the provisions of this IFC rule. This table provides our best estimate of the increase in costs as a result of the changes presented in this final rule. All costs, including increases and reductions, are classified as transfers by the Federal Government to Part D plans or MAOs.

TABLE 2—ACCOUNTING STATEMENT: CLASSIFICATION OF ESTIMATED EXPENDITURES

Category	Transfers ($ millions)
Formulary requirements with respect to certain categories or classes of drugs, CYs 2010–2018:	
Undiscounted Annualized Monetized Transfers	466.7.
Annualized Monetized Transfers Using 7% Discount Rate	424.5.
Annualized Monetized Transfers Using 3% Discount Rate	448.3.
From Whom to Whom?	Federal Government to Part D Plans.

D. Conclusion

Given that we expect the cost of implementing a number of the provisions contained in this IFC rule, as specified in Table 1, will exceed the $100 million threshold within a single year between CY 2010 and CY 2018, we conducted an economic impact analysis with regard to those entities potentially impacted by these provisions. As we stated previously in this preamble, we expect that entities such as pharmacies will benefit from these changes, whereas other entities, such as Part D sponsors, will experience additional costs which they will pass on to CMS through direct subsidy payments and to beneficiaries through additional premiums as reflected in their bids. In accordance with the provisions of Executive Order 12866, this final rule was reviewed by the Office of Management and Budget.

List of Subjects in 42 CFR Part 423

Administrative practice and procedure, Emergency medical services, Health facilities, Health maintenance organizations (HMO), Medicare, Penalties, Privacy, Reporting and recordkeeping.

■ For the reasons set forth in the preamble, the Centers for Medicare & Medicaid Services amends 42 CFR chapter IV as set forth below:

PART 423—VOLUNTARY MEDICARE PRESCRIPTION DRUG BENEFIT

Subpart C—Benefits and Beneficiary Protections

■ 1. The authority citation for part 423 continues to read as follows:

Authority: Secs. 1102, 1106, 1860D–1 through 1860D–42, and 1871 of the Social Security Act (42 U.S.C. 1302, 1306, 1395w–101 through 1395w–152, and 1395hh).

■ 2. Amend § 423.100 by revising the introductory text of paragraph (1) under the definition of ''Part D drug'' to read as follows:

§ 423.100 Definitions.

* * * * *

Part D drug means—

(1) Unless excluded under paragraph (2) of this definition, any of the following if used for a medically accepted indication (as defined in section 1860D–2(e)(4) of the Act)—

* * * * *

■ 3. Amend § 423.120 by—

■ A. Revising (b)(2) introductory text.

■ B. Revising (b)(2)(i).

■ C. Adding (b)(2)(v).

The revisions and additions to read as follows:

§ 423.120 Access to covered Part D drugs.

* * * * *

(b) * * *

(2) Provision of an Adequate Formulary. A Part D plan's formulary must—

(i) Except as provided in paragraphs (b)(2)(ii) and (v) of this section, include within each therapeutic category and class of Part D drugs at least two Part D drugs that are not therapeutically equivalent and bioequivalent, with different strengths and dosage forms available for each of those drugs, except that only one Part D drug must be included in a particular category or class of covered Part D drugs if the category or class includes only one Part D drug.

* * * * *

(v) Effective contract year 2010, a Part D Sponsor's formulary will include all Part D drugs in a category or class that CMS has identified as meeting the two conditions set forth in section 1860D–4(b)(3)(G)(i) of the Act. CMS may establish certain exceptions, which may include the application of drug utilization management under certain circumstances, through a process that provides for public notice and comment, and ensures that any exception to such requirements is based upon scientific evidence and medical standards of practice (and, in the case of antiretroviral medications, is consistent with the Department of Health and Human Services Guidelines for the Use of Antiretroviral Agents in HIV–1–Infected Adults and Adolescents).

* * * * *

(Catalog of Federal Domestic Assistance Program No. 93.778, Medical Assistance Program)

(Catalog of Federal Domestic Assistance Program No. 93.773, Medicare—Hospital Insurance; and Program No. 93.774, Medicare—Supplementary Medical Insurance Program)

Dated: September 12, 2008.

Kerry Weems,

Acting Administrator, Centers for Medicare & Medicaid Services.

Approved: January 9, 2009.

Michael O. Leavitt,

Secretary.

[FR Doc. E9–783 Filed 1–15–09; 8:45 am]

BILLING CODE 4120–01–P

DEPARTMENT OF HEALTH AND HUMAN SERVICES

45 CFR Parts 88 and 89

RIN 0991–AB46

Office of Global Health Affairs: Regulation on the Organizational Integrity of Entities That Are Implementing Programs and Activities Under the Leadership Act; Correction

OFFICE: Office of Global Health Affairs, HHS.

ACTION: Rule; Correction.

SUMMARY: This document corrects technical errors that appeared in the final rule published in the **Federal Register** on December 24, 2008, entitled ''Regulation on the Organizational Integrity of Entities That Are Implementing Programs and Activities Under the Leadership Act'' (73 FR 78997).

DATES: Effective January 20, 2009.

FOR FURTHER INFORMATION CONTACT: Jeanne Monahan, Office of Global Health Affairs, Hubert H. Humphrey Building, Room 639H, 200 Independence Avenue, SW., Washington, DC 20201, Tel: 202–690–6174, e-mail: *Jeanne.monahan@hhs.gov*.

SUPPLEMENTARY INFORMATION:

I. Background

In FR Doc. E8–30686, published on December 24, 2008 (73 FR 78997), there were technical errors that are identified and corrected in the Correction of Errors section below. The correction of errors identified in this correction notice do not change any policies contained in the final rule published December 24, 2008, and thus are effective as if they had been included in the final rule.

II. Summary of Errors

HHS published a final rule entitled ''Regulation on the Organizational Integrity of Entities That Are Implementing Programs and Activities Under the Leadership Act.'' This final rule provided for creation of a new Part 88 of 45 CFR. A final rule published on December 19, 2008 (73 FR 78071), entitled ''Ensuring That Department of Health and Human Services Funds Do Not Support Coercive or Discriminatory Policies or Practices in Violation of Federal Law,'' however, also purported to create a new Part 88. We are correcting this error by creating a new Part 89 and moving the regulatory text from the final rule published on December 24, 2008 (73 FR 78997) to Part 89. We are correcting text throughout the preamble and regulatory text to reflect this move.

III. Correction of Errors

In FR Doc. E8–30686, published on December 24, 2008 (73 FR 78997), make the following corrections:

[Corrections to the preamble]

1. On page 78997, in the heading, third line, ''45 CFR Part 88'' is corrected to read ''45 CFR Part 89.''

2. On page 78998, in the first column, following the sixth full paragraph, the heading ''Section 88.1 Definitions'' is corrected to ''Section 89.1 Definitions.''

3. On page 78998, in the second column, following the fifth paragraph, the heading ''Section 88.2 Objective Integrity of Recipients'' is corrected to ''Section 89.2 Objective Integrity of Recipients.''

4. On page 78998, in the third column, in the first full paragraph, line 6, ''section 88.3'' is corrected to ''section 89.3.''

5. On page 78998, in the third column, following the first full paragraph, the heading ''Section 88.3 Certifications'' is corrected to ''Section 89.3 Certifications.''

6. On page 78998, in the third column, third full paragraph, line 3, ''section 88.3(d)(1)'' is corrected to ''section 89.3(d)(1).''

7. On page 78998, in the third column, fourth full paragraph, lines 3–4, ''section 88.3(d)(2) and (3)'' is corrected to ''section 89.3(d)(2) and (3).''

8. On page 79001, in the first column, following the second full paragraph, the heading ''List of Subjects in the 45 CFR Part 88'' is corrected to ''List of Subjects in the 45 CFR Part 89.''

[Corrections to the regulatory text]

9. On page 79001, in the first column, in the words of issuance, immediately following paragraph captioned ''Editorial Note,'' revise the paragraph to read ''For the reasons stated in the preamble, the Office of Global Health Affairs amends 45 CFR subtitle A to add Part 89 as follows:''

10. On page 79001, in the first column, in the part heading, ''Part 88'' is corrected to ''Part 89.''

11. On page 79001, in the first column, in the table of contents, ''88.1 Definitions'' is corrected to ''89.1 Definitions.''

12. On page 79001, in the first column, in the table of contents, ''88.2 Organizational integrity of recipients'' is corrected to ''89.2 Organizational integrity of recipients.''

13. On page 79001, in the first column, in the table of contents, ''88.3 Certifications'' is corrected to ''89.3 Certifications.''

14. On page 79001, in the first column, the heading ''88.1 Definitions'' is corrected to ''89.1 Definitions.''

15. On page 79001, in the second column, the heading ''88.2 Organizational integrity of recipients'' is corrected to ''89.2 Organizational integrity of recipients.''

16. On page 79001, in the third column, in newly redesignated § 89.2, in paragraph (b), ''required by § 88.3'' is corrected to ''required by § 89.3.''

17. On page 79001, in the third column, the heading ''88.3 Certifications'' is corrected to ''89.3 Certifications.''

Dated: January 12, 2009.

Ann C. Agnew,

Executive Secretary to the Department.

[FR Doc. E9–843 Filed 1–15–09; 8:45 am]

BILLING CODE 4150–28–P

DEPARTMENT OF TRANSPORTATION

Pipeline and Hazardous Materials Safety Administration

49 CFR Parts 190, 191, 192, 193, 194, 195, and 199

RIN 2137–AE29

[Docket No. PHMSA–2007–0033]

Pipeline Safety: Administrative Procedures, Address Updates, and Technical Amendments

AGENCY: Pipeline and Hazardous Materials Safety Administration (PHMSA), U.S. Department of Transportation (DOT).

ACTION: Final rule.

SUMMARY: This final rule adopts, with minor modifications, an interim final rule issued by PHMSA on March 28, 2008, conforming PHMSA's administrative procedures with the Pipeline Inspection, Protection, Enforcement, and Safety Act of 2006 by establishing the procedures PHMSA will follow for issuing safety orders and handling requests for special permits, including emergency special permits. The rule also notifies operators about electronic docket information availability; updates addresses for filing reports, telephone numbers, and routing symbols; and clarifies the time period for processing requests for written interpretations of the regulations. This final rule makes minor amendments and technical corrections to the regulatory text in response to written public comments received after issuance of the interim final rule.

DATES: *Effective Date:* This final rule is effective February 17, 2009.

FOR FURTHER INFORMATION CONTACT: Larry White, PHMSA, Office of Chief Counsel, 202–366–4400, or by e-mail at *lawrence.white@dot.gov*.

SUPPLEMENTARY INFORMATION:

Background

On March 28, 2008, PHMSA issued an interim final rule (73 FR 16562) conforming PHMSA's administrative procedures with the Pipeline Inspection, Protection, Enforcement, and Safety Act of 2006 (PIPES Act) (Pub. L. 109–468) by establishing the procedures PHMSA will follow for issuing safety orders and handling requests for special permits, including emergency special permits. The interim final rule also notified operators about electronic docket information availability; updated addresses, telephone numbers, and routing symbols; and clarified the time period for processing requests for written interpretations of the regulations. Because we considered these amendments to be procedural and ministerial in nature, PHMSA made them effective immediately, while inviting public comment on any and all terms. Having since received and considered written comments in response to our March 28, 2008, notice, PHMSA now is issuing this final rule, incorporating minor amendments and technical corrections to the regulatory text.

Safety Orders. Pursuant to section 13 of the PIPES Act, the interim final rule established the process by which PHMSA will initiate safety order proceedings to address identified pipeline integrity risks that may not rise to the level of a hazardous condition requiring immediate corrective action under 49 U.S.C. 60112, but should be addressed over time to prevent failures. The rule requires PHMSA to provide operators with notice and an opportunity for a hearing before issuing a safety order and expressly authorizes informal consultation in advance of an administrative hearing. In the absence of consent, a safety order must be based on a finding by the Associate Administrator for Pipeline Safety that a pipeline facility has a condition that poses a risk to public safety, property, or the environment. In making the required finding, the Associate Administrator considers all relevant information, including the nine considerations expressly enumerated in 49 U.S.C. 60117(l)(2). PHMSA expects the majority of safety order proceedings to be resolved by consent agreement between the operator and PHMSA. The safety order process established in the interim final rule is largely unchanged in this final rule.

Special Permits. To clarify the procedures governing special permits, and to establish new procedures for exercise of the agency's emergency authority, the interim final rule added a new section, entitled ''Special permits,'' to our administrative procedures in 49 CFR Part 190. The rule outlines the procedures under which pipeline operators (and prospective operators) may request special permits. It specifies the information that must be provided in each application and, in accordance with 49 U.S.C. 60118(c)(1)(B), provides for public notice and hearing on applications for (non-emergency) special permits. Section 10 of the PIPES Act provided PHMSA with the authority to issue an emergency waiver of a pipeline safety regulation without prior notice and hearing if necessary to address an emergency involving pipeline transportation, and the rule outlines the procedures for operators to request such emergency special permits. The special permit process established in the interim final rule is largely unchanged in this final rule.

Other Amendments. The interim final rule also amended part 190 by adding a new paragraph notifying operators that all materials they submit in response to administrative enforcement actions may be placed on publicly accessible websites. The rule sets forth the procedure for seeking confidential treatment, along with other information concerning the agency's new enforcement transparency website. The rule also reflects the recent relocation of DOT Headquarters and the transition from the Department's electronic docket management system to the government-wide electronic docket system (found at regulations.gov), enabling electronic service of enforcement documents. This final rule also amends 49 CFR Parts 191–199 to correct the address for filing annual, accident, and safety-related condition reports for hazardous liquid pipelines (which was inadvertently omitted from the interim final rule) and corrects addresses, telephone numbers, and routing symbols in the regulations for filing various other forms and reports.

Comments on the Interim Final Rule

The interim final rule conformed agency practice and procedures to current public law and reflected the relocation of PHMSA headquarters; it did not impose any new substantive requirements on operators or the public. Accordingly, we determined that it was unnecessary to precede it with a notice of proposed rulemaking. Nevertheless, we encouraged interested persons to participate in this rulemaking proceeding by submitting comments containing relevant information, data, or views and indicated that we may later amend the rule based on comments received.

PHMSA received comments on the interim final rule from ten organizations, including industry associations, individual pipeline operators, and a state pipeline safety representative. Most comments expressed strong support for the rulemaking action itself or for particular aspects of the interim final rule. For example, one commenter stated that it ''applauds and supports the Interim Rule as an important new tool to proactively address pipeline safety issues before they become imminent hazards.'' Another commenter praised the informal consultation process set forth in the rule as a ''forward thinking and cost-effective alternative for examining and addressing safety concerns.''

These and other commenters also questioned certain aspects of the interim rule, in some cases suggesting modifications to the regulatory text. PHMSA reviewed these comments and used them in developing this final rule. The following is a discussion of the comments by issue.

I. Address Updates and Form Filing Instructions

One commenter representing a state pipeline safety program pointed out that the interim final rule left various discrepancies in address-updates and form filing instructions in parts 191–199.

Response: PHMSA appreciates the commenter's careful review and agrees that the address and form filing modifications identified by the commenter should have been made in the interim rule. These remaining address corrections and other modifications are included in this final rule.

II. Safety Orders

Need for Prior Notice and Comment on Proposed Actions Not Expressly Set Forth in the Statute

Several commenters pointed out that the interim rule (§ 190.239(a)) identifies among the corrective actions that PHMSA may prescribe in a safety order certain activities (specifically, ''risk assessment'', ''risk control'', ''data integration'', and ''information management'') that are not expressly authorized in the statute (49 U.S.C. 60117(l)(1)). These commenters contend that full notice and comment proceedings would be needed to include these terms in the regulatory text. The Association of Oil Pipelines and American Petroleum Institute express concern that including these actions ''opens operators to potentially significant and unbounded actions with no certainty of beneficial outcome, limitations on scope, or time frames.'' They suggest ''keeping to the language in the statute'' by striking these terms from the paragraph.

Response: PHMSA is revising the regulatory text in order to minimize unnecessary concern over the exercise of its new statutory authority. Although we included terms that are not in the underlying statutory language, we have no intention of imposing requirements beyond what the law allows. PHMSA understands the need to ensure a strong linkage between identified risk conditions and any mandated corrective actions, and we are committed to tailoring any mandatory actions to the nature and scope of the threat. Consistent with PHMSA's regulatory approach, we consider the acquisition and use of information key elements in the design and implementation of safety controls.

When appropriately framed and implemented, such activities can support more flexible and adaptive measures, as opposed to prescriptive remedial requirements. Accordingly, we anticipate that initial actions proposed in a Notice of Proposed Safety Order (NOPSO) will typically be diagnostic and performance-oriented, requiring the operator to evaluate conditions, conduct testing, and, on the basis of these activities, develop a work plan. Far from exceeding PHMSA's jurisdiction, we believe this approach, and the inclusion of risk assessment and related measures in specific cases, generally will tend to protect operator interests and ensure a direct nexus between risk conditions and required safety controls. As we regularly do in other enforcement actions, PHMSA will be prepared to work closely with the operator in the resolution of technical issues and development and review of work plans.

It remains our view that Congress intended PHMSA to have broad discretion to address identified pipeline risks. By its terms, the statute authorizes PHMSA, in addition to ordering physical inspection, testing, and repair, to require ''other appropriate action to remedy the identified risk condition.'' This language is broad enough to cover risk assessment, data integration and the other actions listed actions if justified in the specific circumstances. By the same token, we acknowledge that including the challenged terminology in the regulatory text is not necessary in order to preserve the full scope of PHMSA's statutory authority and that we need not consider the propriety of any particular remedial actions in this rulemaking proceeding. Accordingly, we are striking the challenged regulatory text and will address the scope of PHMSA's authority to prescribe remedial actions under § 60117(l)(1)) should the issue arise in the context of a specific enforcement case.

1. *Including Initial Proposed Actions in Notice of Proposed Safety Order.*

One commenter contended that the NOPSO should not include any proposed actions at all. The commenter stated that it believed the informal consultation was the appropriate time for the corrective actions to be determined by both parties.

Response: As we have discussed, the informal consultation process will provide an opportunity for reaching a mutually agreeable outcome, which may or may not include the specific corrective measures initially proposed by PHMSA. As a process matter, however, we must specify proposed measures in the NOPSO, in order to put the operator on due notice of the proceeding and potential adjudicatory outcome. The corrective measures proposed in the NOPSO limit the initial actions that PHMSA may order unilaterally in the event that the operator does not respond at all to a NOPSO, or if a consent agreement is not reached. As discussed above, we anticipate that actions proposed in the initial notice will typically be diagnostic- and performance-oriented, requiring the operator to evaluate conditions, conduct testing, and develop a work plan. Because the details of a work plan must be tied to the results of diagnostic evaluation and testing, we anticipate that most safety orders will require or contemplate consultation with PHMSA in the development of a specific work plan.

2. *Extent of PHMSA's Discretion to Use Safety Orders.*

Several commenters noted that under § 60117(l), PHMSA has broad discretion concerning when to use a safety order as an enforcement tool. These commenters express concern that PHMSA might use a safety order for inappropriate purposes and suggest that PHMSA coordinate detailed criteria for the use of safety orders with industry groups or advisory committees.

Response: PHMSA understands the importance of working cooperatively with operators in carrying out our shared responsibility for pipeline safety. The safety order process was carefully designed to provide for maximum cooperation between PHMSA and the affected operator. A safety order, however, is only one of several enforcement tools PHMSA may use to address a safety problem. Selections among available enforcement tools in particular cases are discretionary decisions for which PHMSA is responsible and are not coordinated with industry groups or advisory committees. PHMSA has previously outlined the basic circumstances in which it will consider use of a safety order. As we explained in the March 28, 2008, notice, PHMSA will consider initiating safety order proceedings to address identified long-term risks before they become acute and result in a hazardous condition or imminent failure. PHMSA will consider use of a safety order when it is appropriate to this purpose and will continue to use its other enforcement tools (*i.e.*, notices of probable violation, civil penalty assessments, compliance orders, corrective action orders, etc.) when their use is deemed appropriate. PHMSA does not frequently encounter situations in which a safety order would be appropriate and is unlikely to initiate more than a very few safety order proceedings per year.

It should also be emphasized that safety orders will be highly case-specific and dependent on detailed facts and circumstances in each case. Each safety order used in a given instance must be based on a finding that the pipeline facility involved has a condition that poses a pipeline integrity risk to public safety, property, or the environment and the basis for that finding must be explained in the order itself. Therefore, generic discussions about when a safety order is appropriate may not be very useful; nor is it feasible to list all types of scenarios in which we would or would not use one. Nevertheless, PHMSA is always open to hearing from operators and other stakeholders about their views on when a safety order should be used, and operators are encouraged to communicate their views to PHMSA at any time and by any means they find convenient. If an operator is aware of a long-term risk condition on its pipeline that would be suitable for a cooperative resolution with PHMSA, we encourage the operator to come forward and inform us about the situation so a determination can be made if a safety order proceeding would be appropriate.

3. *Transcription of Hearings.*

One commenter representing natural gas pipeline operators contended that, in the event a safety order proceeding was not resolved through a consent agreement and a hearing was held, a transcript should be made of all hearings, presumably at PHMSA's expense. Another industry commenter disagreed, stating that hearings should not be transcribed.

Response: An operator participating in any pipeline safety enforcement hearing may arrange for the hearing to be transcribed at its own expense. Requesting that PHMSA provide a transcript of every hearing at government expense would be a resource and budget issue for PHMSA and would have to be revisited at a later time. Accordingly, no change to this effect will be made in this final rule.

4. *Ensuring Unbiased Hearing Officers.*

One commenter acknowledged that the rule ensured that hearing officers would have ''no significant prior involvement'' in the case, but argued that the rule should be amended to prohibit hearing officers from having any prior involvement whatsoever. PHMSA is committed to ensuring that its informal enforcement hearings are fair for all concerned. Hearing officers must be unbiased and are expected to provide a full opportunity for the operator to present all information it contends is relevant to the issue(s). PHMSA's hearing officers have expertise in due process requirements, evidentiary matters, and construing laws and regulations and have consistently executed their responsibilities in a fair and professional manner. We would not disqualify a hearing officer merely because he or she heard the case mentioned or otherwise gained some general awareness of the matter. Hearing officers are trained to identify and avoid conflicts of interest, including recusal from hearing a case if a conflict of interest is present or an issue of bias has arisen for any reason. Accordingly, no change was made in the rule on this issue.

5. *Availability of Informal Consultation/Consent Agreement Option in Other Types of PHMSA Enforcement Actions.*

One commenter suggested that the rule be amended to make the informal consultation/consent agreement process established by the rule for safety order proceedings available in other PHMSA enforcement actions such as a Notice of Probable Violation (NOPV), Proposed Compliance Order, or Proposed Civil Penalty. This commenter also suggested that with respect to an operator's response options for a NOPV with a Proposed Compliance Order, an operator must choose between either objecting and providing an explanation or requesting a hearing.

Response: PHMSA's existing regulations expressly authorize consent agreement discussions in enforcement cases involving only a Proposed Compliance Order (see § 190.219(a)). The proposal to adopt a similar provision for enforcement cases involving a Proposed Civil Penalty (with or without a Proposed Compliance Order), however, is beyond the scope of this rulemaking proceeding but may be considered as part of future policy and/or rule change(s).

Although the options for responding to a NOPV were not the subject of the interim final rule, in the interests of clarity, we note that the following options are available:

- An operator that chooses not to contest any of the violations may still submit written explanations or other information it contends may warrant mitigation of the penalty or may reduce the need to order compliance actions;
- An operator that chooses to contest one or more of the violations but not request an oral hearing may still submit a written response to the allegation(s) and/or seek mitigation of any proposed penalty;
- An operator may request an oral hearing to contest the allegation(s) and/or proposed assessment of a civil penalty; or
- An operator may submit a written response to the allegation(s) and also request an oral hearing.

We appreciate the comment and have recently clarified this point in the ''Response Options'' enclosure which is sent out with enforcement notices. If the opportunity arises, we may also make a minor amendment reflecting this clarification in a future rulemaking involving § 190.209.

6. *Miscellaneous Comments on Safety Orders.*

One commenter suggested that PHMSA should consider using safety orders to address mining subsidence concerns.

Response: PHMSA is aware that in certain parts of the country, mining subsidence is a serious issue and would not rule out use of a safety order to address it. However, this involves no change in the rule.

Finally, we are making a minor change to § 190.239(b) to clarify that an operator's response to a NOPSO should be addressed to the PHMSA official who issued the NOPSO (typically the Regional Director); that the Regional Director may sign a consent agreement for PHMSA; and that a consent order must be signed by the Associate Administrator.

III. Special Permits

1. *Modification of Special Permits on an Emergency Basis.*

One commenter noted that modification or revocation of a special permit without prior notice and hearing should only be done in the event of a true safety problem or emergency.

Response: PHMSA agrees and believes that this is clearly reflected in the rule. Accordingly, no change was necessary in the rule on this issue.

2. *Modification or Revocation of a Special Permit for Non-Compliance with a Term or Condition.*

One commenter expressed concern that the word ''material'' does not precede the words ''term or condition'' in § 190.341(h)(1)(v) and, accordingly, that the interim final rule could be read to permit revocation of a special permit based on a clerical error.

Response: PHMSA understands that pipeline infrastructure projects involve major investment decisions based to some degree on reliance on special permits and that modification or revocation is a serious matter. PHMSA has no history of modifying or revoking special permits for clerical errors or other immaterial or frivolous reasons, and nothing in the rule suggested a change in policy. However, in order to prevent any conceivable misunderstanding, and for the sake of consistency with subparagraph (ii) of this section, we are adding the word ''material'' in this final rule. Moreover, it is worth noting that PHMSA's enforcement remedies for noncompliance with a special permit are not limited to modification or revocation of the permit under the final rule. A special permit is a form of agency order, the violation of which may subject the operator to civil penalties and other remedies pursuant to 49 CFR 190.221. Because a holder of a special permit is not operating under the rule that was waived, it is obligated to adhere to all of the terms and conditions of its special permit.

This commenter also stated its view that modification or revocation of a special permit for non-compliance with a term or condition should be limited to the affected pipeline segment as opposed to the entire line.

Response: PHMSA considers such issues on a case-by-case basis and makes a determination concerning the proper scope of any revocation or modification based on the nature and severity of the non-compliance and PHMSA's assessment of the actions necessary to ensure safe operation. If an operator contends that PHMSA's enforcement action should be confined to a smaller portion of its line, with the exception of emergencies, under § 190.341(h)(2), the operator will have the opportunity to show cause for narrower relief. Accordingly, no change was made in the rule on this issue.

3. *Handling of Confidential Materials.*

One commenter suggested that materials submitted to PHMSA, that the applicant designates as confidential, should be protected pending PHMSA's decision whether the materials qualify for confidential treatment.

Response: This reflects current practice, and nothing in the rule suggests that PHMSA would do otherwise. PHMSA intends to continue this practice to the extent consistent with DOT policy and applicable law. Accordingly, no change was made in the rule on this issue.

4. *Compliance Enforcement While Special Permit Application Is Pending.*

One commenter suggested that PHMSA should include a ''safe harbor'' or ''permit shield'' that would prohibit PHMSA from citing an operator for non-compliance with a regulation pending review and consideration of a related special permit application.

Response: We understand that an operator who has come forward with a special permit application might be concerned about being cited for non-compliance while its application is pending. Likewise, we acknowledge that specific circumstances might warrant forbearance of enforcement action pending consideration of a special permit application, as where the operator has in good faith implemented alternative safety controls and when strict compliance with an otherwise applicable requirement would be unduly burdensome or unreasonable. However, operators must recognize that failure to comply with an applicable regulatory requirement is not itself a basis for seeking a special permit and necessarily exposes an operator to some risk of enforcement. PHMSA reviews these circumstances on a case-by-case basis and has the discretion to conduct enforcement or refrain from doing so. PHMSA will not enact a blanket prohibition on its exercise of enforcement authority based on the pendency of a special permit application. Accordingly, no change was made in the rule on this issue.

5. *Special Permits Without an End Date.*

One commenter sought clarification that renewal does not apply to special permits without an end date.

Response: PHMSA agrees, and nothing in the rule would suggest otherwise. Accordingly, no change was necessary in the rule on this issue.

6. *Availability of Informal Consultation/Hearing Option in Special Permit Proceedings.*

One commenter suggested that the informal consultation and hearing process used for safety orders should also be used for special permit proceedings.

Response: PHMSA recognizes the importance of working closely with special permit applicants and communicates extensively with applicants about information that may be needed by PHMSA to process the application and about the kinds of alternative measures that would be needed to ensure an adequate level of safety. Since special permits already involve extensive informal (technical) consultations between PHMSA and the applicant and because there is also an opportunity for (paper) hearing in the special permit process, it is unnecessary to make any changes to the rule on this issue.

7. *Miscellaneous Comments on Special Permits.*

One commenter representing local gas distribution companies (LDCs) voiced concern about the length of time it has historically taken to obtain special permits for gas utilities from the responsible State agencies and commissions. The commenter also suggested that PHMSA should work with the LDC trade associations and State regulators to develop guidance for issuing emergency special permits for predictable situations such as severe winter conditions. Another commenter pointed out that gas LDCs often develop long-term remedial plans with the State commissions.

Response: States handle special permits for gas distribution systems, and State proceedings are not part of this rule. PHMSA has been working with the States to help them develop guidance for issuing emergency special permits and will continue to assist the States on these issues. Nothing in the rule affects the ability of LDCs to develop long-term

remedial plans with the State commissions.

Finally, we are making a minor change to § 190.341(c) to clarify that the information needed by PHMSA to process a special permit application may include environmental information where necessary.

Rulemaking Analyses and Notices

A. Executive Order 12866 and DOT Regulatory Policies and Procedures

This final rule is not considered a significant regulatory action under section 3(f) of Executive Order 12866 and, therefore, was not subject to review by the Office of Management and Budget (OMB). This final rule is not significant under DOT Regulatory Policies and Procedures (44 FR 11034; Feb. 26, 1979). Because this rule conforms agency practice and procedure to reflect current public law and does not impose any new substantive requirements on operators or the public, it has no significant economic impact on regulated entities, and preparation of a regulatory impact analysis was not warranted.

B. Executive Order 13132

This final rule has been analyzed in accordance with the principles and criteria contained in Executive Order 13132 (''Federalism''). This rule does not introduce any regulation that: (1) Has substantial direct effects on the States, the relationship between the national government and the States, or the distribution of power and responsibilities among the various levels of government; (2) imposes substantial direct compliance costs on State and local governments; or (3) preempts State law. Therefore, the consultation and funding requirements of Executive Order 13132 do not apply. Further, this rule does not have impacts on federalism sufficient to warrant the preparation of a federalism assessment.

C. Executive Order 13175

This final rule has been analyzed in accordance with the principles and criteria contained in Executive Order 13175 (''Consultation and Coordination With Indian Tribal Governments''). Because this rule does not significantly or uniquely affect the communities of the Indian tribal governments, the funding and consultation requirements of Executive Order 13175 do not apply.

D. Executive Order 13211

This final rule is not a significant energy action under Executive Order 13211. It is not a significant regulatory action under Executive Order 12866 and is not likely to have a significant adverse effect on the supply, distribution, or use of energy. Further, this rule has not been designated by the Administrator of the Office of Information and Regulatory Affairs as a significant energy action.

E. Regulatory Flexibility Act

Because this final rule conforms 49 CFR part 190 to the PIPES Act, updates the part 190 procedures to reflect current public law, and reflects the relocation of PHMSA headquarters, and will have no direct or indirect economic impacts for government units, businesses, or other organizations, I certify that this rule will not have a significant economic impact on a substantial number of small entities.

F. Paperwork Reduction Act

This final rule contains no new information collection requirements and imposes no additional paperwork burdens. Therefore, submitting an analysis of the burdens to OMB pursuant to the Paperwork Reduction Act was unnecessary.

G. Unfunded Mandates Reform Act

This final rule does not impose unfunded mandates under the Unfunded Mandates Reform Act of 1995. It does not result in costs of $100 million or more, as adjusted for inflation, to either State, local or tribal governments, in the aggregate, or to the private sector, and is the least burdensome alternative that achieves the objectives of the rule.

H. Environmental Assessment

Because it imposes no new substantive requirements on operators or the public, no significant environmental impacts are associated with this final rule.

List of Subjects

49 CFR Part 190

Administrative practice and procedure, Penalties.

49 CFR Part 191

Pipeline safety, Reporting and recordkeeping requirements.

49 CFR Part 192

Pipeline safety, Fire prevention, Security measures.

49 CFR Part 193

Pipeline safety, Fire prevention, Security measures, and Reporting and recordkeeping requirements.

49 CFR Part 194

Oil pollution, Pipeline safety, Reporting and recordkeeping requirements.

49 CFR Part 195

Ammonia, Carbon dioxide, Incorporation by reference, Petroleum, Pipeline safety, Reporting and recordkeeping requirements.

49 CFR Part 199

Drug testing, Pipeline safety, Reporting and recordkeeping requirements, Safety, Transportation.

■ For the reasons discussed in the preamble, the interim rule amending 49 CFR parts 190, 191, 192, 193, 194, 195, and 199 which was published at 73 FR 16562 on March 28, 2008, is adopted as a final rule with the following amendments:

PART 190—PIPELINE SAFETY PROGRAMS AND RULEMAKING PROCEDURES

■ 1. The authority citation for part 190 continues to read as follows:

Authority: 33 U.S.C. 1321; 49 U.S.C. 5101–5127, 60101 *et seq.*; 49 CFR 1.53.

§ 190.239 [Amended]

■ 2. Section 190.239 is amended as follows:

■ a. Paragraph (a) is amended by removing the phrase ''risk assessment, risk control, data integration, information management,'' from the last sentence.

■ b. Paragraph (b)(1) is amended by revising the last sentence to read as set forth below.

■ c. Paragraph (b)(2) is amended by replacing the word PHMSA the third time it appears with the words ''Regional Director'' and replacing the word ''PHMSA'' the fourth time it appears with the words ''Associate Administrator.''

§ 190.239 Safety orders.

(b) * * *

(1) * * * An operator receiving a notice will have 30 days to respond to the PHMSA official who issued the notice.

§ 190.341 [Amended]

■ 3. Section 190.341 is amended as follows:

■ a. Remove the word ''and'' at the end of paragraph (c)(7) and add the word ''and'' to the end of paragraph (c)(8).

■ b. Add paragraph (c)(9) and revise paragraph (h)(1)(v) to read as follows:

§ 190.341 Special permits.

* * * * *

(c) * * *

(9) Any other information PHMSA may need to process the application including environmental analysis where necessary.

* * * * *

(h) * * *

(1) * * *

(v) The holder has failed to comply with any material term or condition of the special permit.

* * * * *

PART 191—TRANSPORTATION OF NATURAL AND OTHER GAS BY PIPELINE: ANNUAL REPORTS, AND SAFETY-RELATED CONDITION REPORTS

■ 4. The authority citation for part 191 continues to read as follows:

Authority: 49 U.S.C. 5121, 60102, 60103, 60104, 60108, 60117, 60118, and 60124; and 49 CFR 1.53.

§ 191.7 [Amended]

■ 5. The first sentence of § 191.7 is amended by adding the words ''the Information Resources Manager,'' before ''PHP–10,'' and by adding ''–0001'' to the zip code ''20590''. and the first sentence of 191.7 is also amended by inserting a comma after the word ''Avenue.''

§ 191.27 [Amended]

■ 6. In § 191.27, paragraph (b) is amended by: adding the words ''Office of Pipeline Safety,'' before the words ''Pipeline and Hazardous Materials Safety Administration'', adding the words ''Information Resources Manager,'' before ''PHP–10,''; and adding ''–0001'' to the zip code ''20590''.

PART 192—TRANSPORTATION OF NATURAL AND OTHER GAS BY PIPELINE: MINIMUM FEDERAL SAFETY STANDARDS

■ 7. The authority citation for part 192 continues to read as follows:

Authority: 49 U.S.C. 5103, 60102, 60104, 60108, 60109, 60110, 60113, and 60118; and 49 CFR 1.53.

§ 192.7 [Amended]

■ 8. In § 192.7, paragraph (b) is amended by adding the words ''Office of Pipeline Safety,'' before the words ''Pipeline and Hazardous Materials Safety Administration,'' and adding ''20590–0001'' after the words ''Washington, DC.''

§ 192.727 [Amended]

■ 9. In § 192.727, paragraph (g)(1) is amended by:

■ a. Adding the words ''Office of Pipeline Safety,'' before the words ''Pipeline and Hazardous Materials Safety Administration,'';

■ b. Adding ''Information Resources Manager,'' before ''PHP–10,'';

■ c. Adding ''–0001'' to the zip code ''20590''.

§ 192.949 [Amended]

■ 10. In § 192.949, paragraph (a) is amended by moving the words ''Information Resources Manager,'' from their current position and placing them before ''PHP–10,'' and by adding ''–0001'' to the zip code ''20590''.

§ 192.951 [Amended]

■ 11. In § 192.951, paragraph (a) is amended by adding the words ''Information Resources Manager,'' before ''PHP–10,'' and by adding ''–0001'' to the zip code ''20590''.

PART 193—LIQUIFIED NATURAL GAS FACILITIES: FEDERAL SAFETY STANDARDS

■ 12. The authority citation for part 193 continues to read as follows:

Authority: 49 U.S.C. 5103, 60102, 60104, 60108, 60109, 60110, 60113, and 60118; and 49 CFR 1.53.

§ 193.2013 [Amended]

■ 13. In § 193.2013, paragraph (b) is amended by adding ''20590–0001'' after the words ''Washington, DC.''

PART 194—RESPONSE PLANS FOR ONSHORE OIL PIPELINES

■ 14. The authority citation for part 194 continues to read as follows:

Authority: 33 U.S.C. 1231, 1321(j)(1)(C), (j)(5) and (j)(6); sec. 2, E.O. 12777, 56 FR 54757, 3 CFR, 1991 Comp., p. 351; 49 CFR 1.53.

§ 194.119 [Amended]

■ 15. In § 194.119, paragraph (a) is amended by adding the words ''Office of Pipeline Safety'' before the words ''Pipeline and Hazardous Materials Safety Administration.''

PART 195—TRANSPORTATION OF HAZARDOUS LIQUIDS BY PIPELINE

■ 16. The authority citation for part 195 continues to read as follows:

Authority: 49 U.S.C. 5103, 60102, 60104, 60108, 60109, 60118; and 49 CFR 1.53.

§ 195.3 [Amended]

■ 17. In § 195.3, paragraph (b) is amended by adding the words ''Office of Pipeline Safety,'' before the words ''Pipeline and Hazardous Materials Safety Administration,'' by adding the words ''U.S. Department of Transportation'' following the words ''Pipeline and Hazardous Materials Safety Administration'' and by adding the zip code ''20590–0001'' following the words ''Washington, DC.''

§ 195.52 [Amended]

■ 18. In § 195.52, paragraph (b) is amended by removing the words ''267–2675,'' and adding in their place ''(202) 372–2428,'' and by adding the zip code ''20590–0001'' after ''Washington, DC''.

§ 195.57 [Amended]

■ 19. In § 195.57, paragraph (b) is amended by adding the words ''Office of Pipeline Safety'' before ''Pipeline and Hazardous Materials Safety Administration,'' and by adding ''Information Resources Manager'' before ''PHP–10.''

§ 195.58 [Amended]

■ 20. Section 195.58 is amended by removing the words ''the Information Resources Manager,''; removing the words ''Room 7128, 400 Seventh Street, SW.,'' and adding in their place ''Information Resources Manager, PHP–10, 1200 New Jersey Avenue, SE.,''; and by adding ''–0001'' to the zip code ''20590''.

§ 195.59 [Amended]

■ 21. In § 195.59, paragraph (a) is amended by adding the words ''Office of Pipeline Safety,'' before ''Pipeline and Hazardous Materials Safety Administration,''; adding the words ''Information Resources Manager,'' before ''PHP–10,''; and adding ''–0001'' to the zip code ''20590''.

§ 195.62 [Amended]

■ 22. Section 195.62 is amended by removing the words ''Information Resources Manager, Office of Pipeline Safety, Department of Transportation, Washington, DC 20590.'' and adding the words ''Office of Pipeline Safety, Pipeline and Hazardous Materials Safety Administration, U.S. Department of Transportation, Information Resources Manager, PHP–10, 1200 New Jersey Avenue, SE., Washington, DC 20590–0001.'' in their place.

PART 199—DRUG AND ALCOHOL TESTING

■ 23. The authority citation for part 199 continues to read as follows:

Authority: 49 U.S.C. 5103, 60102, 60104, 60108, 60117, and 60118; 49 CFR 1.53.

§ 199.7 [Amended]

■ 24. In § 199.7, paragraph (a) is amended by: adding ''U.S.'' before

''Department of Transportation,''; adding ''1200 New Jersey Avenue, SE'' before ''Washington, DC''; and adding ''–0001'' to the zip code ''20590''.

§ 199.229 [Amended]

■ 25. Section 199.229(c) is amended by adding ''–0001'' to the zip code.

Authority: 49 U.S.C. 60101 *et seq.*

Issued in Washington, DC on January 9, 2009.

Carl T. Johnson,

Administrator.

[FR Doc. E9–628 Filed 1–15–09; 8:45 am]

BILLING CODE 4910–60–P

DEPARTMENT OF TRANSPORTATION

Federal Motor Carrier Safety Administration

49 CFR Parts 356, 365, and 374

[Docket No. FMCSA–2008–0235]

RIN 2126–AB16

Elimination of Route Designation Requirement for Motor Carriers Transporting Passengers Over Regular Routes

AGENCY: Federal Motor Carrier Safety Administration (FMCSA), DOT.

ACTION: Final rule.

SUMMARY: FMCSA discontinues the administrative requirement that applicants seeking for-hire authority to transport passengers over regular routes submit a detailed description and a map of the route(s) over which they propose to operate. The Agency will register such carriers as regular-route carriers without requiring the designation of specific regular routes and fixed end-points. Once motor carriers have obtained regular-route, for-hire operating authority from FMCSA, they will no longer need to seek additional FMCSA approval in order to change or add routes. Each registered regular-route motor carrier of passengers will continue to be subject to the full safety oversight and enforcement programs of FMCSA and its State and local partners.

DATES: This rule is effective March 17, 2009. The compliance date for this rule is July 15, 2009.

FOR FURTHER INFORMATION CONTACT: Mr. David Miller, Regulatory Development Division, (202) 366–5370 or by e-mail at: *FMCSAregs@dot.gov*.

SUPPLEMENTARY INFORMATION:

I. Description of the Rulemaking

FMCSA is discontinuing the administrative requirement that motor carriers must describe specific routes and provide maps of these routes when seeking authority to provide regular-route, for-hire transportation of passengers in interstate commerce. Except for carriers who are public recipients of governmental assistance, regular-route passenger carriers will be issued motor carrier certificates of registration that are not route specific.

Designation of regular routes in motor carrier operating authority is not currently required by statute and administratively discontinuing this requirement will streamline the registration process by eliminating the need for motor carriers to file new applications when seeking to change or expand their routes. It will also benefit new entrants by simplifying the OP–1(P) application for operating authority. Designation of regular routes is an administrative requirement associated with the economic regulation of the passenger carrier industry. With the elimination of certain economic regulations beginning in 1980, the Agency believes continuing the practice of approving applications for changing and adding routes is unnecessary and offers no additional safety benefits to the public or the commercial passenger carrier community.

However, the Agency will continue to require public recipients of governmental assistance to designate specific routes when applying for regular-route authority because 49 U.S.C. 13902(b)(2)(B) permits persons to challenge specific regular-route transportation service provided by public entities on the ground that authorizing such service is not consistent with the public interest. Eliminating the route designation requirement in these circumstances would prevent the Agency from evaluating proposed transportation services under the public interest standard, in violation of its statutory mandate.

This final rule amends several FMCSA regulations that reference authorized routes or points of service in order to make them consistent with the Agency's discontinuation of the route designation requirement. The OP–1(P) application form will also be changed to eliminate the current route-designation and mapping requirements. Because changes to the OP–1(P) form must be approved by the Office of Management and Budget (OMB), and FMCSA plans to seek approval of additional modifications to the form in response to recent legislative changes unrelated to route designation requirements, the OMB approval process is expected to take several months. As a result, FMCSA will not implement the new procedures until 180 days after publication of this final rule.

II. Legal Basis for the Rulemaking

The Motor Carrier Act of 1935 (MCA) (Pub. L. 74–255, 49 Stat. 543, Aug. 9, 1935) authorized the Interstate Commerce Commission (ICC) to regulate motor carriers by, among other things, issuing certificates of operating authority to motor carriers of property and passengers operating in interstate commerce. Section 207(a) of the MCA stated that ''no certificate shall be issued to any common carrier of passengers for operations over other than a regular route or regular routes, and between fixed termini [end-points], except as such carriers may be authorized to engage in special or charter operations.'' Section 208(a) of the MCA required that certificates issued to regular-route passenger carriers specify the routes, end-points, and intermediate points to be served under the certificate. Section 208(b) permitted occasional deviations from authorized routes, if permitted by ICC regulations.

These MCA provisions were subsequently recodified without substantive change as 49 U.S.C. 10922(f)(1)–(3). However, they were repealed by the ICC Termination Act of 1995 (ICCTA) (Pub. L. 104–88, 109 Stat. 888, Dec. 29, 1995). The statutory registration requirements specific to passenger carriers are now codified at 49 U.S.C. 13902(b). Section 103 of the ICCTA retained some of the former registration requirements of section 10922 applicable to regular-route passenger carriers but eliminated many others, including 49 U.S.C. 10922(f)(1)–(3).

The ICCTA also transferred the ICC's authority to issue for-hire motor carrier operating authority to the Secretary of Transportation (Secretary). Section 101 of the Motor Carrier Safety Improvement Act of 1999 (Pub. L. 106–159, 113 Stat. 1750, Dec. 9, 1999) (MCSIA) created the FMCSA and directed the Administrator of the FMCSA to carry out the duties and powers vested in the Secretary by Title 49 United States Code, Chapters 133 through 149. These powers include the authority of the Secretary, under 49 U.S.C. 13301(a), to prescribe regulations governing registration requirements for motor carriers transporting passengers in interstate commerce for compensation. In addition to the statutory delegation, the Secretary has administratively delegated this authority to the FMCSA Administrator under 49 CFR 1.73(a).

III. Notice of Proposed Rulemaking

Although the ICCTA no longer required regular-route operating authority to specify routes and fixed end-points, FMCSA continued to require applicants seeking such authority to submit maps and a detailed description of proposed operating route(s) as attachments to the Form OP–1(P) application. Carriers proposing to add routes to their operating systems were required to file new applications in order to do so. Pursuant to Part 365 of Title 49, Code of Federal Regulations (CFR), the route descriptions submitted by an applicant were published in the *FMCSA Register* and subject to protests by interested parties. The number of protests received has been very small, an average of one protest per year between 2003 and 2007.

On August 7, 2008, FMCSA published a Notice of Proposed Rulemaking (NPRM) (73 FR 45929) requesting public comment on its proposal to discontinue the route designation requirement and make conforming changes to its regulations. FMCSA proposed to henceforth issue motor carrier certificates of registration authorizing service as a regular-route passenger carrier without designating specific regular routes or fixed end-points. As a result of this proposal, registered regular-route passenger carriers would no longer need to submit a new application to FMCSA in order to add new routes or change existing routes. The Agency asserted that the paperwork and administrative burden on both the industry and the Agency would be reduced as a result of eliminating the need to file and process multiple applications containing detailed routes.

FMCSA proposed to modify existing certificates of regular-route authority to make them consistent with the broader authority that would be issued to new entrants pursuant to the final rule in this proceeding. Such certificates would supersede any route-specific authority issued by FMCSA or its predecessor agencies.

In order to implement this proposal, FMCSA proposed to amend various sections of Title 49 CFR to make them consistent with the Agency's proposed registration procedures. These amendments included: (1) Removing 49 CFR 356.3, which prescribes the extent to which passenger carriers may serve points not located on their ''authorized routes''; (2) modifying 49 CFR 365.101, which identifies the types of operating authority applications filed with the Agency, to reflect that the Agency would no longer grant authority to passenger carriers to operate over specific routes; (3) eliminating references to ''authorized points'' or ''authorized routes'' in 49 CFR 374.303(f) and 374.311(a); and (4) amending 49 CFR 374.311(b) by removing the requirement that carriers file notices of schedule and route changes with FMCSA. Regular-route motor passenger carriers would still be required to post notices of schedule changes in each affected bus and carrier facility for the convenience of their passengers.

The basis for the NPRM was FMCSA's belief that the route designation requirement no longer serves a useful purpose. The requirement was enacted primarily to protect existing carriers serving particular routes from competition. Subsequent legislative changes limited the ability of existing carriers to protest applications based on economic grounds and there was no measurable nexus between the route designation requirement and motor carrier safety.

In the NPRM, FMCSA noted that the proposal would result in uniform treatment of regular-route motor passenger carriers and passenger carriers that provide charter and special transportation (as well as property carriers), who need only file a single application in order to provide nationwide interstate transportation. Applicants would remain subject to the applicable statutory fitness standards in 49 U.S.C. 13902(a) and potential safety problems would be addressed through new entrant safety audits, compliance reviews, or vehicle inspections. The Agency believed there was no justification for treating regular-route passenger carriers differently from other carriers to ensure their compliance with the Federal Motor Carrier Safety Regulations.

In summary, the Agency concluded that the current route designation requirement, and the related requirement that existing registered carriers file new applications when adding or changing routes, had no discernible safety benefit, yet burdened the industry and the Agency with unnecessary paperwork.

IV. Discussion of Comments to the NPRM

FMCSA received eight comments in response to the NPRM. Commenters included three transportation companies—Greyhound Lines, Inc., Coach USA, Inc., and Peter Pan Bus Lines, Inc; two labor organizations—the Amalgamated Transit Union (ATU) and the Transportation Trades Department, AFL-CIO (TTD); one trade association—the American Bus Association (ABA); one State regulatory agency—the Missouri Department of Transportation, Motor Carrier Services Division (MoDOT); and one public interest advocacy group—the Disability Rights Education and Defense Fund (DREDF). The commenters opposed the Agency's proposal. The three primary objections regarding the proposal were: (1) It would adversely impact motor carrier safety; (2) it would prevent meaningful implementation of the recently enacted Over-the-Road Bus Transportation Accessibility Act of 2007; and (3) it would create serious problems in determining the scope of Federal preemption of State authority to regulate the intrastate regular-route transportation of passengers.

A. Impact on Motor Carrier Safety

The six transportation industry-related commenters raised concerns regarding motor carrier safety issues. Greyhound urged FMCSA to propose procedures that would enable the Agency to conduct a meaningful assessment of a passenger carrier's fitness to comply with regulatory requirements before allowing it to operate or expand its interstate operations. Greyhound agreed there was little need for route descriptions under the current system, where applications are rarely protested and grants of operating authority are virtually automatic. However, Greyhound believed that if FMCSA decides to ''reinstitute'' a system where it conducts a thorough investigation of a bus carrier's fitness prior to granting operating authority, route descriptions would be essential. According to Greyhound, FMCSA must know the specific route(s) over which an applicant will operate in order to determine whether the applicant has a sufficient number of qualified drivers and vehicles, as well as adequate safety management controls, to operate safely over these routes. It contended that such an analysis is mandated by 49 U.S.C. 13902(a)(1), which requires FMCSA to register a person to provide transportation as a motor carrier only if it finds the person willing and able to comply with the applicable regulations and safety fitness requirements. The ABA and other commenters echoed Greyhound's views.

Along similar lines, Coach USA believed that the application process is an important tool in monitoring and enhancing safety compliance because it provides an additional incentive for existing carriers to maintain compliance. This incentive would be lost if carriers are no longer required to file new applications to expand their

operations. Coach USA also believed that FMCSA will have difficulty assessing the adequacy of a regular-route carrier's safety program during a new entrant safety audit or compliance review unless it knows whether the carrier plans to operate in a large geographic area or a small one.

Peter Pan believed that the minimal cost of the route designation requirement is outweighed by the benefits of continuing existing procedures, which allow knowledgeable parties to raise safety compliance concerns by protesting new applications. Peter Pan interpreted the NPRM as suggesting that the States will oversee safety compliance issues connected with expanded service, and questioned the ability of the States to do so adequately. Peter Pan claimed FMCSA has not offered any meaningful justification for the proposed change.

ATU and TTD agreed with Greyhound that disclosure of route designations can play a crucial role in enforcing and ensuring compliance with safety regulations, since the requirements to operate a limited route differ from those necessary to run a nationwide network. ATU believed route designations can also assist inspectors in locating operators for additional safety audits, inspections and compliance reviews, while TTD contended that FMCSA must know the routes of cross-border bus operations to ensure such carriers comply with safety regulations and do not engage in cabotage.

FMCSA Response:

FMCSA acknowledges the commenters' concerns about highway safety. However, this rulemaking does not affect the applicability of any of the Agency's safety regulations intended to prevent crashes and save lives. Neither FMCSA nor its predecessor agencies have considered the routes over which a passenger carrier proposes to operate when investigating the carrier's fitness prior to granting operating authority. The fitness standard set forth in 49 U.S.C. 13902(a)(1) pertains to a carrier's overall willingness and ability to comply with safety and other applicable regulations, not whether the carrier has sufficient drivers or equipment to operate over a particular route. Accordingly, the statute does not mandate a route-specific safety fitness analysis, as claimed by Greyhound. If Congress had intended to mandate such an analysis, it presumably would have not eliminated the statutory requirement that operating authority specify routes and end points. Moreover, although the commenters contend that scrutiny of particular routes is important for safety reasons, they do not point to a single protest filed with FMCSA or its predecessor agencies alleging that an applicant would be unable to operate safely over a specific route based on the length or other characteristics of the route.

While FMCSA recognizes the need to continue to give closer scrutiny to passenger carrier applications, it has focused its efforts on carriers that try to reinvent themselves as new entities, after demonstrating serious safety compliance problems identified through compliance reviews, new entrant safety audits and vehicle inspections. The Agency believes its resources are more effectively and efficiently directed to identifying and taking appropriate action against such problem carriers rather than scrutinizing the specific routes carriers propose to serve and speculating about their ability to safely operate over those routes.

While the multiple application requirement can theoretically provide an incentive for existing carriers to maintain compliance, the very small number of applications that are protested indicates that it does not serve this purpose in actual practice. Contrary to claims that operating authority is granted automatically through a computer-driven system, FMCSA provides public notice of all applications and considers all legitimate protests.

While Greyhound claimed, inaccurately, that the Agency's system ignored a protest and granted an application, that claim does not reflect what actually happened. In that case—No MC–405969, Fung Wah Bus Transportation, Inc.—there was a lengthy delay in delivering the protest to FMCSA. As a result, the Agency did not learn about the protest until after the authority was issued. The Agency considered the protest after it was discovered, but rejected it because it raised issues that the Agency believed at the time it could not lawfully consider in evaluating the applicant's fitness to receive new operating authority.

Regular-route passenger carriers are the only motor carriers regulated by FMCSA that must file multiple applications to expand their interstate operations. Passenger carriers providing charter or other non-regular route services, as well as property carriers, are required to file only a single application covering all potential operations in interstate commerce. Safety compliance monitoring for these carriers is carried out through new entrant safety audits, compliance reviews and vehicle inspections. These monitoring activities provide ample incentives to maintain compliance with the Federal Motor Carrier Safety Regulations, because problem carriers may be placed out of service for lack of safety fitness or be assessed civil penalties for regulatory noncompliance. The commenters have not shown that requiring regular-route carriers to file new applications when expanding their operations has any discernible impact on motor carrier safety.

Contrary to the statement by Peter Pan, FMCSA did not suggest in the NPRM that States would be responsible for overseeing compliance issues connected with potential expansion of regular-route service. Rather, the Agency was soliciting comment on the potential impact of its proposal on the statutory preemption of State regulation of intrastate transportation, which is discussed in more detail below.

Coach USA's comment that FMCSA will have difficulty assessing the adequacy of a regular-route carrier's safety program during a new entrant safety audit or compliance review unless it knows the size of the geographic area in which the carrier plans to operate misconstrues the nature of these safety assurance processes. New entrant safety audits and compliance reviews are designed to provide a snapshot of the carrier's basic safety management controls and regulatory compliance at the time of the audit or compliance review. During the safety audit or compliance review, the auditor or investigator can readily determine the scope of the carrier's existing operations by asking carrier officials or reviewing the carrier's records. Such reviews are not intended to speculate about future safety compliance based on potential future expansion or contraction of a carrier's operations, regardless of whether the carrier transports passengers or property. For example, a new property carrier may only operate a small number of trucks at the time of the new entrant safety audit, but may plan to expand its service territory and lease or purchase a significant number of additional vehicles in the future. The safety audit determines the carrier's compliance based on its existing operations, not future plans that may never come to fruition. In the event the carrier eventually follows through on its expansion plans, vehicle inspections would identify potential safety problems that warrant closer scrutiny of the carrier through a compliance review. Contrary to ATU's comments, route designations are not needed to locate carriers for additional safety audits, inspections and compliance reviews. Safety audits and compliance reviews are generally conducted at the carrier's principal place of business and vehicle

inspections are not scheduled to coincide with a carrier's designated route system.

Finally, TTD's comment that FMCSA must know the routes of cross-border bus operations to ensure such carriers comply with safety regulations and do not engage in cabotage fails to take into account that FMCSA is not issuing operating authority to regular-route passenger carriers domiciled in Mexico. If the Agency does so in the future, there is an extensive safety monitoring system in place, which includes pre-authorization safety audits, mandated safety inspection decals and compliance reviews designed to ensure compliance with the applicable safety regulations (see 49 CFR Part 365, Subpart E, and 49 CFR Part 385, Subpart B).

Cabotage is generally defined as the prohibited point-to-point transportation of property or passengers within the United States by foreign-domiciled motor carriers. Identifying routes in a foreign motor carrier's operating authority would not ensure that the carrier does not engage in cabotage. If a carrier were issued broad general regular-route operating authority in accordance with the final rule, it would still need to publish schedules listing pickup and drop-off locations along the route to make the operation financially viable. Such schedules would be more useful to enforcement officials in identifying potential cabotage violations than a route described in the carrier's operating certificate, which would not indicate pickup and drop-off times and locations.

B. The Over-the-Road Bus Transportation Accessibility Act of 2007

The Over-the-Road Bus Transportation Accessibility Act of 2007 (OTRB Act), Public Law 110–291, 122 Stat. 2915, became law on July 30, 2008. This legislation was enacted in response to the Fung Wah case mentioned in the previous section of this preamble. In that case, FMCSA determined that it lacked statutory authority to consider compliance with the Department of Transportation's (DOT) Americans With Disabilities Act (ADA) accessibility regulations in determining whether a passenger carrier should be granted interstate operating authority. The OTRB Act directed FMCSA to determine: (1) An over-the-road bus (OTRB) company's willingness and ability to comply with DOT's ADA accessibility requirements in 49 CFR Part 37, Subpart H, before granting new operating authority to provide interstate passenger transportation; and (2) an OTRB company's compliance with 49 CFR Part 37, Subpart H, in determining whether to suspend or revoke existing operating authority. The Act also required DOT and the U.S. Department of Justice to enter into a Memorandum of Understanding delineating their respective roles and responsibilities in enforcing the DOT ADA regulations.

Most of the commenters expressed concern that the Agency's proposal would prevent meaningful implementation of the OTRB Act. The commenters noted that without route designations, FMCSA would be unable to assess whether an applicant for new operating authority has adequate equipment and systems to comply with the ADA. Moreover, eliminating the need for existing carriers to seek new authority before expanding their operations would eliminate FMCSA's ability to assess ADA compliance before allowing route expansion. DREDF supported an ABA proposal that would have FMCSA: (1) Investigate all bus applications that are protested on ADA grounds and issue a written decision setting forth the grounds for approval or denial of the application; (2) include ADA compliance as a pass/fail factor in the new entrant safety audit because noncompliance with ADA regulations is indicative of breakdowns in a carrier's management controls; (3) make clear that a bus company's failure to comply with DOT's ADA regulations is grounds for revocation of operating authority; and (4) establish procedures for investigating ADA compliance and determining whether revocation is appropriate.

FMCSA Response:

The OTRB Act requires that FMCSA determine compliance with DOT's ADA accessibility regulations as an additional element to consider in determining an applicant's fitness to receive new operating authority. Other statutory fitness criteria include compliance with FMCSA's commercial and safety regulations, the Agency's safety fitness standards, and the applicable financial responsibility regulations. In amending 49 U.S.C. 13902(a), Congress placed compliance with the ADA regulations on the same footing as compliance with the commercial and safety regulations. Therefore, the Agency will consider ADA compliance (as it does with compliance issues regarding the other applicable regulations) when protesting parties allege that an applicant's failure to comply with the ADA regulations requires the Agency to withhold new operating authority, or when the Agency otherwise has reason to believe the applicant may not be ADA-compliant. The Agency's decision to withhold operating authority will be based on its evaluation of whether the applicant is willing and able to prospectively comply with the regulations and is not intended to be a sanction for past noncompliance. Accordingly, although past noncompliance with regulatory requirements is certainly an important factor in evaluating a carrier's fitness, it does not automatically bar an applicant from receiving new operating authority.

This change in the Agency's application procedures will not prevent meaningful implementation of the OTRB Act. The Act amended 49 U.S.C. 13905 to permit FMCSA to suspend or revoke a carrier's operating authority based on willful noncompliance with the DOT ADA regulations. Consequently, it is unnecessary to wait for a carrier to file a new application before filing a complaint with the Agency requesting suspension or revocation of the carrier's operating authority. FMCSA also has the authority to initiate a suspension or revocation proceeding based on findings of willful noncompliance discovered during compliance reviews, new entrant safety audits or other means. Unlike denial of an application for new authority based on ADA noncompliance, suspension or revocation can be more comprehensive, affecting the carrier's ability to operate over all of its existing routes, not just the new routes proposed in the application. Moreover, the Agency is in the process of implementing the Act's requirement to enter into a Memorandum of Understanding (MOU) with the U.S. Department of Justice to more effectively coordinate enforcement of DOT's ADA accessibility regulations.

DREDF's comment supporting ABA's proposal to include ADA compliance as a pass/fail factor in the new entrant safety audit raises issues that are beyond the scope of this rulemaking proceeding, which is limited to modifying the Agency's regulations to correspond with its removal of the route-designation requirement.

C. State Preemption Issues

As was noted in the NPRM, 49 U.S.C. 13902(b)(3) preempts States from regulating intrastate service provided by interstate regular-route passenger carriers over interstate routes. If a regular-route passenger carrier obtains operating authority from FMCSA, a State is prohibited from requiring the carrier to obtain operating authority to provide intrastate service on an interstate route operated by the carrier. Because the preemption is limited to operations over specific routes, FMCSA requested comment on whether elimination of route designations in FMCSA operating certificates would make this preemption provision more

difficult to enforce and perhaps result in increased State regulation of intrastate regular-route transportation.

Under 49 U.S.C. 14501(a)(1)(A), States are also preempted from regulating the scheduling of interstate or intrastate transportation (including discontinuance of or reduction in the level of service) on an interstate route. FMCSA requested comment on whether elimination of route designations will affect this preemption provision.

Greyhound contended that section 13902(b)(3) clearly shows that Congress intended for Federal operating authority to be issued on a route-specific basis. It claimed that without specific route designations, preemption would be impossible to administer because, on the one hand, States could argue that the lack of a specific route designation would permit them to license all regular-route intrastate service within their borders while, on the other hand, interstate carriers could argue that the broad scope of their interstate authority prohibits the States from licensing any intrastate service they provide. Greyhound argued that elimination of route designations would also encourage States to regulate schedules and rates on all intrastate bus routes, thus vitiating the section 14501(a)(1)(A) preemption.

Coach USA pointed out that a route-specific certificate issued by FMCSA is important evidence of the interstate service provided by the carrier which makes it easier to preempt States from regulating intrastate transportation provided over a carrier's designated interstate routes. Removal of route designations, it claims, would make it more difficult to administer the statutory preemption.

MoDOT submitted the lengthiest comment regarding this issue. Contrary to Greyhound and Coach USA, who indicated that removal of the route designation requirement could encourage the States to significantly increase their regulatory presence, MoDOT argued that FMCSA's proposal would radically expand the Federal preemption of State and local laws regulating wholly intrastate commerce in excess of the statutory limits intended by Congress and would unlawfully deregulate market entry into the intrastate passenger transportation industry.

MoDOT asserted that elimination of the route designation requirement would negate any meaningful distinction between regular-route and irregular-route service since irregular-route service, at least under Missouri law, includes transportation not restricted to any specific route or routes within the carrier's authorized service area. Consequently, MoDOT believed that the FMCSA proposal would effectively preempt State and local entry regulations with reference to all intrastate transportation of passengers provided by federally-authorized motor carriers within any State.

FMCSA Response:

We do not agree with Greyhound that section 13902(b)(3) requires FMCSA regular-route operating authority to be route specific. That provision authorizes federally-registered carriers to provide regular-route transportation entirely in one State if such intrastate transportation is to be provided on a route over which the carrier provides interstate transportation of passengers. There is no reference to authorized routes in section 13902(b)(3), as there was in former 49 U.S.C. 10922(d)(2), which authorized the ICC to issue interstate operating authority that would allow interstate carriers to provide intrastate transportation on a route over which a carrier has, or will be granted, Federal authority. The ICCTA, the same statute that eliminated the route designation requirements of 49 U.S.C. 10922(f)(1)–(3), also eliminated the authorized route language that appeared in former section 10922(d)(2). Therefore, an FMCSA-licensed passenger carrier need only provide interstate transportation of passengers over a regular route in order to provide intrastate transportation along that route. There is no requirement that the route be specified in the motor carrier's FMCSA operating authority certificate in order to qualify as an interstate route for purposes of implementing section 13902(b)(3).

FMCSA also disagrees with MoDOT's assertion that elimination of the route designation requirement effectively eliminates the distinction between regular-route and irregular-route service. Passenger carriers will continue to receive operating authority based on the type of service being provided—regular-route or charter and special operations. Carriers registered to provide regular-route service are required by 49 CFR 374.305(c) to provide printed schedules to the traveling public at all facilities where tickets are sold. Such schedules must show for each route operated by the carrier: (a) The points along the route where facilities are located or where the bus trips originate or terminate; and (b) the arrival or departure time for each such point. Even without these regulatory requirements, regular-route carriers would need to provide such schedules out of business necessity in order to attract ridership along their routes.

In the absence of route designations in a carrier's operating certificate, the States can readily obtain copies of schedules from carriers to determine which routes they are operating over. After obtaining these schedules, the States would still have to show a lack of sufficient nexus between intrastate transportation provided over the route and legitimate interstate service over the route in order to legally regulate the intrastate transportation. Accordingly, we believe the most significant difficulties in implementing section 13902(b)(3) would result from establishing the presence or absence of legitimate interstate transportation along the route, not the elimination of the route designation requirement. Based on the comments, the precise impact of eliminating the route designation requirement on Federal preemption of State regulation of intrastate regular-route transportation is still uncertain.

In conclusion, FMCSA adopts its proposal to discontinue the requirement that applicants seeking for-hire operating authority to transport passengers over regular routes submit a detailed description and a map of the route(s) over which they propose to operate. The Agency will continue to require public recipients of governmental assistance to designate specific routes when applying for regular-route authority because eliminating the route designation requirement in these circumstances would prevent the Agency from evaluating proposed transportation services under the public interest standard, in violation of its statutory mandate.

In order to implement the Agency's new policy, FMCSA removes 49 CFR 356.3, which prescribes the extent to which passenger carriers may serve points not located on their ''authorized routes.'' The final rule also amends: (1) 49 CFR 365.101 to reflect that the Agency will no longer be granting authority to passenger carriers to operate over specific routes; (2) 49 CFR 374.303(f) and 374.311(a) by removing language indicating that the Agency grants authority to operate over specific routes; and (3) 49 CFR 374.311(b) by removing the requirement that carriers must file with FMCSA notices of schedule and route changes. FMCSA will continue to require regular-route motor passenger carriers to post notices of schedule changes in each affected bus and carrier facility for the convenience of their passengers.

V. Regulatory Analyses and Notices

Executive Order 12866 (Regulatory Planning and Review); DOT Regulatory Policies and Procedures

FMCSA has determined that this action is not significant under Executive Order 12866. This rule does not have an annual effect on the economy of $100 million or more and does not adversely affect in a material way the economy, a sector of the economy, productivity, competition, jobs, the environment, public health or safety, or State, local, or tribal governments or communities. The rule does not create a serious inconsistency or otherwise interfere with an action taken or planned by another agency, does not materially alter the budgetary impact of entitlements, grants, user fees, or loan programs or the rights and obligations of recipients, and does not raise novel legal or policy issues arising out of legal mandates or the Administration's priorities. FMCSA prepared a regulatory impact assessment for this rule as required by Executive Order 12866, but the final rule and the regulatory impact assessment have not been reviewed by OMB because it was determined to be not significant under the Executive Order.

The Agency prepared a regulatory impact assessment for the NPRM, which evaluated route deregulation options under three industry growth/change scenarios. Based on these scenarios, FMCSA estimated annual net benefits to the industry of $36,000 to $44,000 from avoided costs related to the elimination of the route designation application requirement. Evaluated over a 10-year period, the estimated net present value of the industry cost savings ranged from $222,000 to $341,000 based on discount rates of 3 to 7 percent depending on whether one uses a 3-year average, 5-year average, or 5-year median. No comments were received disputing these figures.

Regulatory Flexibility Act, as Amended by the Small Business Regulatory Enforcement Fairness Act of 1996

The Regulatory Flexibility Act (RFA) (5 U.S.C. 601–612), as amended by the Small Business Regulatory Enforcement Fairness Act of 1996 (Pub. L. 104–121, 110 Stat. 857), requires Federal agencies, as a part of each rulemaking, to consider regulatory alternatives that minimize the impact on small entities while achieving the objectives of the rulemaking. FMCSA evaluated the effects of this proposed rule on small entities as required by the RFA.

All new entrant regular-route carriers are affected by the proposed rulemaking action because all such carriers must file an OP–1(P) application to obtain regular-route authority. Existing regular-route carriers are affected only if they seek to expand their routes. New entrants and existing carriers submitted an average of 92 regular-route authority applications each year between 2003 and 2005. Currently, there are 272 active regular route authority carriers. The Small Business Administration (SBA) Small Business Size Standard for Interurban and Rural Bus Transportation is no more than $6.5 million in gross annual revenue. Based on U.S. industry statistics for 2002 provided by the SBA Office of Advocacy, 279 out of 323 firms in the interurban and rural bus transportation industry (roughly 86 percent) reported annual receipts of less than $5 million. Additionally, carriers with annual gross revenues between $5 million and $6.5 million would also be classified as small businesses, though FMCSA is unable to quantify the number of carriers within this range. Absent more current detailed data, the Initial Regulatory Flexibility Analysis prepared for the NPRM assumed that approximately 86 percent of regular route authority carriers are small entities. Comments received on the NPRM did not dispute these figures or provide additional data.

This rule is a deregulatory action implementing a policy change intended to provide relief to industry. There are no additional costs specific to these entities as a result of this rulemaking, and the underlying policy change provides applicants with a cost saving of approximately $300 for each application. Therefore, FMCSA certifies this action will have no significant economic impact on a substantial number of small entities.

Unfunded Mandates Reform Act

The Unfunded Mandates Reform Act of 1995 (2 U.S.C. 1531 *et seq.*) requires each agency to assess the effects of its regulatory actions on State, local, and tribal governments and the private sector. Any agency promulgating a final rule likely to result in a Federal mandate requiring expenditures by State, local, or tribal governments, in the aggregate, or by the private sector, of $136.1 million or more in any 1 year must prepare a written statement incorporating various assessments, estimates, and descriptions that are delineated in the Act. FMCSA determined that this rule would not have an impact of $136.1 million or more in any 1 year.

Environmental Impacts

The Agency analyzed this rule for the purpose of the National Environmental Policy Act of 1969 (NEPA) (42 U.S.C. 4321 *et seq.*), the Council on Environmental Quality regulations implementing NEPA (40 CFR 1500–1508), and FMCSA's NEPA Implementation Order 5610.1 published March 1, 2004 (69 FR 9680). This action is categorically excluded under Appendix 2, paragraph 6.d of the Order (regulations governing applications for operating authority) from further environmental documentation. The Agency believes that the action includes no extraordinary circumstances that would have any effect on the quality of the environment. Thus, the action does not require an environmental assessment or an environmental impact statement.

FMCSA also analyzed this rule under the Clean Air Act, as amended (CAA) section 176(c), (42 U.S.C. 7401 *et seq.*) and implementing regulations promulgated by the Environmental Protection Agency. Approval of this action is exempt from the CAA's general conformity requirement since it involves rulemaking and policy development and issuance. (See 40 CFR 93.153(c)(2).) It would not result in any emissions increase nor would it have any potential to result in emissions that are above the general conformity rule's *de minimis* emission threshold levels. Moreover, it is reasonably foreseeable that the rule would not increase total CMV mileage, how CMVs operate, or the CMV fleet-mix of motor carriers. This action merely allows passenger carriers to make changes to their regular routes without FMCSA approval. Such alterations are routinely approved under current Agency procedures.

Environmental Justice

The FMCSA evaluated the environmental effects of this rule in accordance with Executive Order 12898 and determined that there are no environmental justice issues associated with its provisions nor any collective environmental impact resulting from its promulgation. Environmental justice issues would be raised if there were ''disproportionate'' and ''high and adverse impact'' on minority or low-income populations. None of the alternatives analyzed in the Agency's categorical exclusion determination, discussed under National Environmental Policy Act, would result in high and adverse environmental impacts.

Paperwork Reduction Act

Under the Paperwork Reduction Act of 1995 (PRA) (44 U.S.C. 3501–3520), a Federal agency must obtain approval from OMB for each collection of

information it conducts, sponsors, or requires. This rulemaking would affect a currently-approved information collection request (ICR) covered by OMB Control Number 2126–0016, entitled ''Licensing Applications for Motor Carrier Operating Authority.'' This ICR has an annual burden of 55,738 burden hours, and will expire on January 31, 2009.

FMCSA is authorized to register for-hire motor passenger carriers under the provisions of 49 U.S.C. 13902. The form used to apply for operating authority with FMCSA is Form OP–1(P) for motor passenger carriers. This form requests information on the applicant's identity, location, familiarity with safety requirements, and type of proposed operations. The OP-1(P) application form will be changed to eliminate the current route-designation and mapping requirements. Changes to the OP-1(P) form must be approved by the Office of Management and Budget (OMB); consequently, FMCSA will seek OMB approval of this change, as well as other modifications to the form in response to recent legislative changes unrelated to route designation requirements.

The Agency's discontinuation of its current requirement that motor carriers seeking authority to transport passengers over regular routes submit to FMCSA a detailed description and map of the proposed route(s) for approval would reduce the currently approved ICR annual burden by 180 hours [2 hours to provide description and map of regular routes in Form OP–1(P) × 90 regular route applications per year = 180 hours]. The estimated annual burden for this ICR would decrease to 55,558 hours [55,738 currently approved annual burden hours − 180 hours less time to complete Form OP-1(P) regular route applications = 55,558]. No comments were received regarding Paperwork Reduction Act issues.

Executive Order 12988 (Civil Justice Reform)

This rulemaking meets applicable standards in sections 3(a) and 3(b)(2) of Executive Order 12988, entitled ''Civil Justice Reform,'' to minimize litigation, eliminate ambiguity, and reduce burden.

Executive Order 12630 (Taking of Private Property)

FMCSA has analyzed this rule under Executive Order 12630, entitled ''Governmental Actions and Interference with Constitutionally Protected Property Rights.'' We do not anticipate that this action would effect a taking of private property or otherwise have taking implications under Executive Order 12630.

Executive Order 13132 (Federalism)

This action has been analyzed in accordance with the principles and criteria contained in Executive Order 13132, and FMCSA has determined that this rulemaking would not warrant the preparation of a Federalism assessment. We have determined that this proposed action would not affect the States' ability to discharge traditional State government functions.

Executive Order 13211 (Energy Effects)

FMCSA has analyzed this action under Executive Order 13211, entitled ''Actions Concerning Regulations That Significantly Affect Energy Supply, Distribution, or Use.'' The Agency has determined that it is not a significant energy action within the meaning of section 4(b) of the Executive Order and is not likely to have a significant adverse effect on the supply, distribution, or use of energy. Therefore, a Statement of Energy Effects is not required.

Executive Order 12372 (Intergovernmental Review)

The regulations implementing Executive Order 12372 regarding intergovernmental consultation on Federal programs and activities do not apply to this rule.

Executive Order 13175 (Tribal Consultation)

FMCSA has analyzed this action under Executive Order 13175, dated November 6, 2000, and believes that it would not have substantial direct effects on one or more Indian tribes; would not impose substantial compliance costs on Indian tribal governments; and would not preempt tribal law. Therefore, a tribal summary impact statement is not required.

List of Subjects

49 CFR Part 356

Administrative practice and procedure, Routing, Motor carriers.

49 CFR Part 365

Administrative practice and procedure, Brokers, Buses, Freight forwarders, Motor carriers, Moving of household goods, Reporting and recordkeeping requirements.

49 CFR Part 374

Aged, Blind, Buses, Civil rights, Freight, Individuals with disabilities, Motor carriers, Smoking.

■ For the reasons discussed above, FMCSA amends title 49, Code of Federal Regulations, chapter III, subchapter B, as set forth below:

PART 356—MOTOR CARRIER ROUTING REGULATIONS

■ 1. The authority citation for part 356 continues to read as follows:

Authority: 5 U.S.C. 553; 49 U.S.C. 13301 and 13902; and 49 CFR 1.73.

§ 356.3 [Removed and Reserved].

■ 2. Remove and reserve § 356.3.

PART 365—RULES GOVERNING APPLICATIONS FOR OPERATING AUTHORITY

■ 3. The authority citation for part 365 continues to read as follows:

Authority: 5 U.S.C. 553 and 559; 16 U.S.C. 1456; 49 U.S.C. 13101, 13301, 13901–13906, 14708, 31138, and 31144; 49 CFR 1.73.

■ 4. Amend § 365.101 by removing and reserving paragraph (f) and revising paragraph (e) to read as follows:

§ 365.101 Applications governed by these rules.

* * * * *

(e) Applications for certificates under 49 U.S.C. 13902(b)(3) to operate as a motor carrier of passengers in intrastate commerce over regular routes if such intrastate transportation is to be provided on a route over which the carrier provides interstate transportation of passengers.

(f) [Reserved].

* * * * *

PART 374—PASSENGER CARRIER REGULATIONS

■ 5. The authority citation for part 374 continues to read as follows:

Authority: 49 U.S.C. 13301 and 14101; and 49 CFR 1.73.

■ 6. Amend § 374.303 by revising paragraph (f) to read as follows:

§ 374.303 Definitions.

* * * * *

(f) *Service* means passenger transportation by bus over regular routes.

* * * * *

■ 7. Amend § 374.311 by revising paragraphs (a) and (b) to read as follows:

§ 374.311 Service responsibility.

(a) *Schedules.* Carriers shall establish schedules that can be reasonably met, including connections at junction points, to serve adequately all points.

(b) *Continuity of service.* No carrier shall change an existing regular-route schedule without first displaying

conspicuously a notice in each facility and on each bus affected. Such notice shall be displayed for a reasonable time before it becomes effective and shall contain the carrier's name, a description of the proposed schedule change, the effective date thereof, the reasons for the change, the availability of alternate service, and the name and address of the carrier representative passengers may contact.

* * * * *

Issued on: January 6, 2009.

John H. Hill,

Administrator.

[FR Doc. E9–363 Filed 1–15–09; 8:45 am]

BILLING CODE 4910–EX–P

DEPARTMENT OF COMMERCE

National Oceanic and Atmospheric Administration

50 CFR Part 679

[Docket No. 071106671–8010–02]

RIN 0648–XM71

Fisheries of the Exclusive Economic Zone Off Alaska; Pacific Cod by Non–American Fisheries Act Crab Vessels Catching Pacific Cod for Processing by the Inshore Component in the Central Regulatory Area of the Gulf of Alaska

AGENCY: National Marine Fisheries Service (NMFS), National Oceanic and Atmospheric Administration (NOAA), Commerce.

ACTION: Temporary rule; closure.

SUMMARY: NMFS is prohibiting directed fishing for the A season allowance of the 2009 Pacific cod sideboard limits apportioned to non–American Fisheries Act (AFA) crab vessels catching Pacific cod for processing by the inshore component in the Central Regulatory Area of the Gulf of Alaska (GOA). This action is necessary to prevent exceeding the A season allowance of the 2009 Pacific cod sideboard limits apportioned to non–AFA crab vessels catching Pacific cod for processing by the inshore component in the Central Regulatory Area of the GOA.

DATES: Effective 1200 hrs, Alaska local time (A.l.t.), January 13, 2009, until 1200 hrs, A.l.t., September 1, 2009.

FOR FURTHER INFORMATION CONTACT: Josh Keaton, 907–586–7228.

SUPPLEMENTARY INFORMATION: NMFS manages the groundfish fishery in the GOA exclusive economic zone according to the Fishery Management Plan for Groundfish of the Gulf of Alaska (FMP) prepared by the North Pacific Fishery Management Council under authority of the Magnuson–Stevens Fishery Conservation and Management Act. Regulations governing fishing by U.S. vessels in accordance with the FMP appear at subpart H of 50 CFR part 600 and 50 CFR part 679.

The A season allowance of 2009 Pacific cod sideboard limits apportioned to non–AFA crab vessels catching Pacific cod for processing by the inshore component in the Central Regulatory Area of the GOA is 588 metric tons (mt) for the GOA, as established by the 2008 and 2009 harvest specifications for groundfish of the GOA (73 FR 10562, February 27, 2008).

In accordance with § 680.22(e)(2)(i), the Regional Administrator, has determined that the A season allowance of the 2009 Pacific cod sideboard limits apportioned to non–AFA crab vessels catching Pacific cod for processing by the inshore component in the Central Regulatory Area of the GOA will soon be reached. Therefore, the Regional Administrator is establishing a sideboard directed fishing allowance for Pacific cod as 550 mt in the inshore component in the Central Regulatory Area of the GOA. The remaining 38 mt in the inshore component in the Central Regulatory Area of the GOA will be set aside as bycatch to support other anticipated groundfish fisheries. In accordance with § 680.22(e)(3), the Regional Administrator finds that this sideboard directed fishing allowance has been reached. Consequently, NMFS is prohibiting directed fishing for Pacific cod by non–AFA crab vessels catching Pacific cod for processing by the inshore component in the Central Regulatory Area of the GOA.

After the effective date of this closure the maximum retainable amounts at § 679.20(e) and (f) apply at any time during a trip.

Classification

This action responds to the best available information recently obtained from the fishery. The Assistant Administrator for Fisheries, NOAA (AA), finds good cause to waive the requirement to provide prior notice and opportunity for public comment pursuant to the authority set forth at 5 U.S.C. 553(b)(B) as such requirement is impracticable and contrary to the public interest. This requirement is impracticable and contrary to the public interest as it would prevent NMFS from responding to the most recent fisheries data in a timely fashion and would delay the sideboard directed fishing closure of Pacific cod apportioned to non–AFA crab vessels catching Pacific cod for processing by the inshore component in the Central Regulatory Area of the GOA. NMFS was unable to publish a notice providing time for public comment because the most recent, relevant data only became available as of January 12, 2009.

The AA also finds good cause to waive the 30-day delay in the effective date of this action under 5 U.S.C. 553(d)(3). This finding is based upon the reasons provided above for waiver of prior notice and opportunity for public comment.

This action is required by § 680.22 and is exempt from review under Executive Order 12866.

Authority: 16 U.S.C. 1801 *et seq.*

Dated: January 13, 2009.

Emily H. Menashes,

Acting Director, Office of Sustainable Fisheries, National Marine Fisheries Service.

[FR Doc. E9–917 Filed 1–13–09; 4:15 pm]

BILLING CODE 3510–22–S

Proposed Rules

Federal Register
Vol. 74, No. 11
Friday, January 16, 2009

This section of the FEDERAL REGISTER contains notices to the public of the proposed issuance of rules and regulations. The purpose of these notices is to give interested persons an opportunity to participate in the rule making prior to the adoption of the final rules.

DEPARTMENT OF HOMELAND SECURITY

Office of the Secretary

6 CFR Part 5

[Docket No. DHS–2008–0164]

Privacy Act of 1974: Department of Homeland Security—025 Law Enforcement Authority in Support of the Protection of Property Owned or Occupied by the Department of Homeland Security

AGENCY: Privacy Office, DHS.

ACTION: Notice of proposed rulemaking.

SUMMARY: The Department of Homeland Security (DHS) is giving concurrent notice of a revised and updated system of records pursuant to the Privacy Act of 1974 for the Department of Homeland Security Law Enforcement Authority in Support of the Protection of Property Owned or Occupied by the Department of Homeland Security system of records and this proposed rulemaking. In this proposed rulemaking, the Department proposes to exempt portions of the system of records from one or more provisions of the Privacy Act because of criminal, civil, and administrative enforcement requirements.

DATES: Comments must be received on or before February 17, 2009.

ADDRESSES: You may submit comments, identified by docket number DHS–2008–0164, by one of the following methods:

- *Federal e-Rulemaking Portal: http://www.regulations.gov.* Follow the instructions for submitting comments.
- *Fax:* 703–483–2999.
- *Mail:* Hugo Teufel III, Chief Privacy Officer, Department of Homeland Security, Washington DC 20528.

Instructions: All submissions received must include the agency name and docket number for this notice. All comments received will be posted without change to *http://www.regulations.gov,* including any personal information provided.

Docket: For access to the docket to read background documents or comments received, go to *http://www.regulations.gov.*

FOR FURTHER INFORMATION CONTACT: For general questions and privacy issues, please contact: Hugo Teufel III (703–235–0780), Chief Privacy Officer, Privacy Office, Department of Homeland Security, Washington, DC 20528.

SUPPLEMENTARY INFORMATION:

Background: Pursuant to the savings clause in the Homeland Security Act of 2002, Public Law 107–296, Section 1512, 116 Stat. 2310 (November 25, 2002), the Department of Homeland Security (DHS) and its components and offices have relied on preexisting Privacy Act systems of records notices for the collection and maintenance of records that pertain to Law Enforcement Authority in Support of the Protection of Property Owned or Occupied by the Department of Homeland Security activities.

As part of its efforts to streamline and consolidate its Privacy Act record systems, DHS is establishing a new agency-wide system of records under the Privacy Act (5 U.S.C. 552a) for DHS Law Enforcement Authority in Support of the Protection of Property Owned or Occupied by the Department of Homeland Security records. The Law Enforcement Authority in Support of the Protection of Property Owned or Occupied by the Department of Homeland Security system of records is the baseline system for investigative activities. This will ensure that all components of DHS follow the same privacy rules for collecting and handling Law Enforcement Authority in Support of the Protection of Property Owned or Occupied by the Department of Homeland Security records.

In this notice of proposed rulemaking, DHS now is proposing to exempt Law Enforcement Authority in Support of the Protection of Property Owned or Occupied by the Department of Homeland Security, in part, from certain provisions of the Privacy Act.

The Privacy Act embodies fair information principles in a statutory framework governing the means by which the United States Government collects, maintains, uses, and disseminates personally identifiable information. The Privacy Act applies to information that is maintained in a ''system of records.'' A ''system of records'' is a group of any records under the control of an agency from which information is retrieved by the name of the individual or by some identifying number, symbol, or other identifying particular assigned to the individual. Individuals may request their own records that are maintained in a system of records in the possession or under the control of DHS by complying with DHS Privacy Act regulations, 6 CFR part 5.

The Privacy Act requires each agency to publish in the **Federal Register** a description of the type and character of each system of records that the agency maintains, and the routine uses that are contained in each system in order to make agency recordkeeping practices transparent, to notify individuals regarding the uses to which personally identifiable information is put, and to assist individuals in finding such files within the agency.

The Privacy Act allows Government agencies to exempt certain records from the access and amendment provisions. If an agency claims an exemption, however, it must issue a Notice of Proposed Rulemaking to make clear to the public the reasons why a particular exemption is claimed.

DHS is claiming exemptions from certain requirements of the Privacy Act for Law Enforcement Authority in Support of the Protection of Property Owned or Occupied by the Department of Homeland Security. Some information in Law Enforcement Authority in Support of the Protection of Property Owned or Occupied by the Department of Homeland Security relates to official DHS national security, law enforcement, immigration, and intelligence activities. These exemptions are needed to protect information relating to DHS activities from disclosure to subjects or others related to these activities. Specifically, the exemptions are required to preclude subjects of these activities from frustrating these processes; to avoid disclosure of activity techniques; to protect the identities and physical safety of confidential informants and law enforcement personnel; to ensure DHS' ability to obtain information from third parties and other sources; to protect the privacy of third parties; and to safeguard classified information. Disclosure of information to the subject of the inquiry could also permit the subject to avoid detection or apprehension.

The exemptions proposed here are standard law enforcement and national security exemptions exercised by a large number of Federal law enforcement and intelligence agencies. In appropriate circumstances, where compliance would not appear to interfere with or adversely affect the law enforcement purposes of this system and the overall law enforcement process, the applicable exemptions may be waived on a case by case basis.

A notice of system of records for Law Enforcement Authority in Support of the Protection of Property Owned or Occupied by the Department of Homeland Security is also published in this issue of the **Federal Register**.

List of Subjects in 6 CFR Part 5

Freedom of information; Privacy.

For the reasons stated in the preamble, DHS proposes to amend Chapter I of Title 6, Code of Federal Regulations, as follows:

PART 5—DISCLOSURE OF RECORDS AND INFORMATION

1. The authority citation for Part 5 continues to read as follows:

Authority: 6 U.S.C. 101 *et seq.*; Pub. L. 107–296, 116 Stat. 2135; 5 U.S.C. 301. Subpart A also issued under 5 U.S.C. 552. Subpart B also issued under 5 U.S.C. 552a.

2. Add at the end of Appendix C to Part 5, the following new paragraph ''14'':

Appendix C to Part 5—DHS Systems of Records Exempt From the Privacy Act

* * * * *

14. The Department of Homeland Security—025 Law Enforcement Authority in Support of the Protection of Property Owned or Occupied by the Department of Homeland Security system of records consists of electronic and paper records and will be used by DHS and its components. DHS/All—025 Law Enforcement Authority in Support of the Protection of Property Owned or Occupied by the Department of Homeland Security is a repository of information held by DHS in connection with its several and varied missions and functions, including, but not limited to: The enforcement of civil and criminal laws; investigations, inquiries, and proceedings there under; and national security and intelligence activities. DHS/All—025 Law Enforcement Authority in Support of the Protection of Property Owned or Occupied by the Department of Homeland Security contains information that is collected by, on behalf of, in support of, or in cooperation with DHS and its components and may contain personally identifiable information collected by other Federal, State, local, tribal, foreign, or international government agencies. Pursuant to 5 U.S.C. 552a(k)(1), (2), and (5), this system is exempt from the following provisions of the Privacy Act, subject to the limitations set forth in those subsections: 5 U.S.C. 552a (c)(3), (d), (e)(1), (e)(4)(G), (e)(4)(H), (e)(4)(I), and (f). Exemptions from these particular subsections are justified, on a case-by-case basis to be determined at the time a request is made, for the following reasons:

(a) From subsection (c)(3) (Accounting for Disclosures) because release of the accounting of disclosures could alert the subject of an investigation of an actual or potential criminal, civil, or regulatory violation to the existence of the investigation, and reveal investigative interest on the part of DHS as well as the recipient agency. Disclosure of the accounting would therefore present a serious impediment to law enforcement efforts and/or efforts to preserve national security. Disclosure of the accounting would also permit the individual who is the subject of a record to impede the investigation, to tamper with witnesses or evidence, and to avoid detection or apprehension, which would undermine the entire investigative process.

(b) From subsection (d) (Access to Records) because access to the records contained in this system of records could inform the subject of an investigation of an actual or potential criminal, civil, or regulatory violation, to the existence of the investigation, and reveal investigative interest on the part of DHS or another agency. Access to the records could permit the individual who is the subject of a record to impede the investigation, to tamper with witnesses or evidence, and to avoid detection or apprehension. Amendment of the records could interfere with ongoing investigations and law enforcement activities and would impose an impossible administrative burden by requiring investigations to be continuously reinvestigated. In addition, permitting access and amendment to such information could disclose security-sensitive information that could be detrimental to homeland security.

(c) From subsection (e)(1) (Relevancy and Necessity of Information) because in the course of investigations into potential violations of Federal law, the accuracy of information obtained or introduced occasionally may be unclear or the information may not be strictly relevant or necessary to a specific investigation. In the interests of effective law enforcement, it is appropriate to retain all information that may aid in establishing patterns of unlawful activity.

(d) From subsections (e)(4)(G), (e)(4)(H), and (e)(4)(I) (Agency Requirements), and (f) (Agency Rules) because portions of this system are exempt from the individual access provisions of subsection (d) for the reasons noted above, and therefore DHS is not required to establish requirements, rules, or procedures with respect to such access. Providing notice to individuals with respect to existence of records pertaining to them in the system of records or otherwise setting up procedures pursuant to which individuals may access and view records pertaining to themselves in the system would undermine investigative efforts and reveal the identities of witnesses, and potential witnesses, and confidential informants.

Dated: December 22, 2008.

Hugo Teufel III,

Chief Privacy Officer, Department of Homeland Security.

[FR Doc. E9–926 Filed 1–15–09; 8:45 am]

BILLING CODE 4410–10–P

DEPARTMENT OF HOMELAND SECURITY

Office of the Secretary

6 CFR Part 5

[Docket No. DHS–2008–0151]

Privacy Act of 1974: Department of Homeland Security—023 Personnel Security Management

AGENCY: Privacy Office, DHS.

ACTION: Notice of proposed rulemaking.

SUMMARY: The Department of Homeland Security (DHS) is giving concurrent notice of a revised and updated system of records pursuant to the Privacy Act of 1974 for the Department of Homeland Security—023 Personnel Security Management system of records and this proposed rulemaking. In this proposed rulemaking, the Department proposes to exempt portions of the system of records from one or more provisions of the Privacy Act because of criminal, civil, and administrative enforcement requirements.

DATES: Comments must be received on or before February 17, 2009.

ADDRESSES: You may submit comments, identified by docket number DHS–2008–0151, by one of the following methods:

- *Federal e-Rulemaking Portal: http://www.regulations.gov.* Follow the instructions for submitting comments.
- *Fax:* 703–483–2999.
- *Mail:* Hugo Teufel III, Chief Privacy Officer, Department of Homeland Security, Washington, DC 20528.

Instructions: All submissions received must include the agency name and docket number for this notice. All comments received will be posted without change to *http://www.regulations.gov,* including any personal information provided.

Docket: For access to the docket to read background documents or comments received, go to *http://www.regulations.gov.*

FOR FURTHER INFORMATION CONTACT: For general questions and privacy issues, please contact: Hugo Teufel III (703–235–0780), Chief Privacy Officer, Privacy Office, Department of Homeland Security, Washington, DC 20528.

SUPPLEMENTARY INFORMATION:

Background: Pursuant to the savings clause in the Homeland Security Act of 2002, Public Law 107–296, Section 1512, 116 Stat. 2310 (November 25, 2002), the Department of Homeland Security (DHS) and its components and offices have relied on preexisting Privacy Act systems of records notices for the collection and maintenance of records that pertain to personnel security management.

As part of its efforts to streamline and consolidate its Privacy Act record systems, DHS is establishing a new agency-wide system of records under the Privacy Act (5 U.S.C. 552a) for DHS personnel security management records. The personnel security management system of records is the baseline system for personnel security activities, as led by the DHS Office of the Chief Security Officer, for the Department. This will ensure that all DHS components follow the same privacy rules for collecting and handling personnel security management records. In this notice of proposed rulemaking, DHS now is proposing to exempt Personnel Security Management, in part, from certain provisions of the Privacy Act.

The Privacy Act embodies fair information principles in a statutory framework governing the means by which the United States Government collects, maintains, uses, and disseminates personally identifiable information. The Privacy Act applies to information that is maintained in a ''system of records.'' A ''system of records'' is a group of any records under the control of an agency from which information is retrieved by the name of the individual or by some identifying number, symbol, or other identifying particular assigned to the individual. Individuals may request their own records that are maintained in a system of records in the possession or under the control of DHS by complying with DHS Privacy Act regulations, 6 CFR part 5.

The Privacy Act requires each agency to publish in the **Federal Register** a description of the type and character of each system of records that the agency maintains, and the routine uses that are contained in each system in order to make agency recordkeeping practices transparent, to notify individuals regarding the uses to which personally identifiable information is put, and to assist individuals in finding such files within the agency.

The Privacy Act allows Government agencies to exempt certain records from the access and amendment provisions. If an agency claims an exemption, however, it must issue a Notice of Proposed Rulemaking to make clear to the public the reasons why a particular exemption is claimed.

DHS is claiming exemptions from certain requirements of the Privacy Act for Personnel Security Management. Some information in Personnel Security Management relates to official DHS national security, law enforcement, immigration, intelligence activities, and protective services to the President of the United States or other individuals pursuant to Section 3056 and 3056A of Title 18. These exemptions are needed to protect information relating to DHS activities from disclosure to subjects or others related to these activities. Specifically, the exemptions are required to preclude subjects of these activities from frustrating these processes; to avoid disclosure of activity techniques; to protect the identities and physical safety of confidential informants and law enforcement personnel; to ensure DHS' ability to obtain information from third parties and other sources; to protect the privacy of third parties; to safeguard classified information; and to safeguard records in connection with providing protective services to the President of the United States or other individuals pursuant to Section 3056 and 3056A of Title 18. Disclosure of information to the subject of the inquiry could also permit the subject to avoid detection or apprehension.

The exemptions proposed here are standard law enforcement and national security exemptions exercised by a large number of Federal law enforcement and intelligence agencies. In appropriate circumstances, where compliance would not appear to interfere with or adversely affect the law enforcement purposes of this system and the overall law enforcement process, the applicable exemptions may be waived on a case by case basis.

A notice of system of records for Personnel Security Management is also published in this issue of the **Federal Register**.

List of Subjects in 6 CFR Part 5

Freedom of information; Privacy.

For the reasons stated in the preamble, DHS proposes to amend Chapter I of Title 6, Code of Federal Regulations, as follows:

PART 5—DISCLOSURE OF RECORDS AND INFORMATION

1. The authority citation for Part 5 continues to read as follows:

Authority: 6 U.S.C. 101 *et seq.*; Pub. L. 107–296, 116 Stat. 2135; 5 U.S.C. 301. Subpart A also issued under 5 U.S.C. 552. Subpart B also issued under 5 U.S.C. 552a.

2. Add at the end of Appendix C to Part 5, the following new paragraph ''14'':

Appendix C to Part 5—DHS Systems of Records Exempt From the Privacy Act

* * * * *

14. The Department of Homeland Security—023 Personnel Security Management system of records consists of electronic and paper records and will be used by DHS and its components. DHS/All—023 Personnel Security Management is a repository of information held by DHS in connection with its several and varied missions and functions, including, but not limited to: The enforcement of civil and criminal laws; investigations, inquiries, and proceedings there under; national security and intelligence activities; and protection of the President of the United States or other individuals pursuant to Section 3056 and 3056A of Title 18. Personnel Security Management contains information that is collected by, on behalf of, in support of, or in cooperation with DHS and its components and may contain personally identifiable information collected by other Federal, State, local, tribal, foreign, or international government agencies. Pursuant to 5 U.S.C. 552a(k)(1), (2), (3), and (5), this system is exempt from the following provisions of the Privacy Act, subject to the limitations set forth in those subsections: 5 U.S.C. 552a(c)(3), (d), (e)(1), (e)(4)(G), (e)(4)(H), (e)(4)(I), and (f). Exemptions from these particular subsections are justified, on a case-by-case basis to be determined at the time a request is made, for the following reasons:

(a) From subsection (c)(3) (Accounting for Disclosures) because release of the accounting of disclosures could alert the subject of an investigation of an actual or potential criminal, civil, or regulatory violation to the existence of the investigation, and reveal investigative interest on the part of DHS as well as the recipient agency. Disclosure of the accounting would therefore present a serious impediment to law enforcement efforts and/or efforts to preserve national security. Disclosure of the accounting would also permit the individual who is the subject of a record to impede the investigation, to tamper with witnesses or evidence, and to avoid detection or apprehension, which would undermine the entire investigative process.

(b) From subsection (d) (Access to Records) because access to the records contained in this system of records could inform the subject of an investigation of an actual or potential criminal, civil, or regulatory violation, to the existence of the investigation, and reveal investigative interest on the part of DHS or another agency. Access to the records could permit the individual who is the subject of a record to impede the investigation, to tamper with witnesses or evidence, and to avoid detection or apprehension. Amendment of the records could interfere with ongoing investigations and law enforcement activities and would impose an impossible administrative burden by requiring investigations to be continuously reinvestigated. In addition, permitting access and amendment to such

information could disclose security-sensitive information that could be detrimental to homeland security.

(c) From subsection (e)(1) (Relevancy and Necessity of Information) because in the course of investigations into potential violations of Federal law, the accuracy of information obtained or introduced occasionally may be unclear or the information may not be strictly relevant or necessary to a specific investigation. In the interests of effective law enforcement, it is appropriate to retain all information that may aid in establishing patterns of unlawful activity.

(d) From subsections (e)(4)(G), (H), and (I) (Agency Requirements), and (f) (Agency Rules) because portions of this system are exempt from the individual access provisions of subsection (d) for the reasons noted above, and therefore DHS is not required to establish requirements, rules, or procedures with respect to such access. Providing notice to individuals with respect to existence of records pertaining to them in the system of records or otherwise setting up procedures pursuant to which individuals may access and view records pertaining to themselves in the system would undermine investigative efforts and reveal the identities of witnesses, and potential witnesses, and confidential informants.

Dated: December 22, 2008.

Hugo Teufel III,

Chief Privacy Officer, Department of Homeland Security.

[FR Doc. E9–925 Filed 1–15–09; 8:45 am]

BILLING CODE 4410–10–P

DEPARTMENT OF HOMELAND SECURITY

Office of the Secretary

6 CFR Part 5

[Docket No. DHS–2008–0152]

Privacy Act of 1974: Department of Homeland Security—024 Facility and Perimeter Access Control and Visitor Management.

AGENCY: Privacy Office, DHS.

ACTION: Notice of proposed rulemaking.

SUMMARY: The Department of Homeland Security (DHS) is giving concurrent notice of a revised and updated system of records pursuant to the Privacy Act of 1974 for the Department of Homeland Security—024 Facility and Perimeter Access Control and Visitor Management system of records and this proposed rulemaking. In this proposed rulemaking, the Department proposes to exempt portions of the system of records from one or more provisions of the Privacy Act because of criminal, civil, and administrative enforcement requirements.

DATES: Comments must be received on or before February 17, 2009.

ADDRESSES: You may submit comments, identified by docket number DHS–2008–0152, by one of the following methods:

- *Federal e-Rulemaking Portal: http://www.regulations.gov.* Follow the instructions for submitting comments.
- *Fax:* 703–483–2999.
- *Mail:* Hugo Teufel III, Chief Privacy Officer, Department of Homeland Security, Washington, DC 20528.

Instructions: All submissions received must include the agency name and docket number for this notice. All comments received will be posted without change to *http://www.regulations.gov,* including any personal information provided.

Docket: For access to the docket to read background documents or comments received, go to *http://www.regulations.gov.*

FOR FURTHER INFORMATION CONTACT: For general questions and privacy issues, please contact: Hugo Teufel III (703–235–0780), Chief Privacy Officer, Privacy Office, Department of Homeland Security, Washington, DC 20528.

SUPPLEMENTARY INFORMATION:

Background: Pursuant to the savings clause in the Homeland Security Act of 2002, Public Law 107–296, Section 1512, 116 Stat. 2310 (November 25, 2002), the Department of Homeland Security (DHS) and its components and offices have relied on preexisting Privacy Act systems of records notices for the collection and maintenance of records that pertain to facility and perimeter access control and visitor management.

As part of its efforts to streamline and consolidate its Privacy Act record systems, DHS is establishing a new agency-wide system of records under the Privacy Act (5 U.S.C. 552a) for DHS facility and perimeter access control and visitor management records. The access control and visitor management system of records is the baseline system for facility and perimeter access control and visitor management, as led by the DHS Office of the Chief Security Officer. This will ensure that all components of DHS follow the same privacy rules for collecting and handling access control and visitor management records.

The Privacy Act embodies fair information principles in a statutory framework governing the means by which the United States Government collects, maintains, uses, and disseminates personally identifiable information. The Privacy Act applies to information that is maintained in a ''system of records.'' A ''system of records'' is a group of any records under the control of an agency from which information is retrieved by the name of the individual or by some identifying number, symbol, or other identifying particular assigned to the individual. Individuals may request their own records that are maintained in a system of records in the possession or under the control of DHS by complying with DHS Privacy Act regulations, 6 CFR part 5.

The Privacy Act requires each agency to publish in the **Federal Register** a description of the type and character of each system of records that the agency maintains, and the routine uses that are contained in each system in order to make agency recordkeeping practices transparent, to notify individuals regarding the uses to which personally identifiable information is put, and to assist individuals in finding such files within the agency.

The Privacy Act allows Government agencies to exempt certain records from the access and amendment provisions. If an agency claims an exemption, however, it must issue a Notice of Proposed Rulemaking to make clear to the public the reasons why a particular exemption is claimed.

DHS is claiming exemptions from certain requirements of the Privacy Act for Facility and Perimeter Access Control and Visitor Management. Some information in Facility and Perimeter Access Control and Visitor Management relates to official DHS national security, law enforcement, immigration, and intelligence activities. These exemptions are needed to protect information relating to DHS activities from disclosure to subjects or others related to these activities. Specifically, the exemptions are required to preclude subjects of these activities from frustrating these processes; to avoid disclosure of activity techniques; to protect the identities and physical safety of confidential informants and law enforcement personnel; to ensure DHS' ability to obtain information from third parties and other sources; to protect the privacy of third parties; and to safeguard classified information. Disclosure of information to the subject of the inquiry could also permit the subject to avoid detection or apprehension.

The exemptions proposed here are standard law enforcement and national security exemptions exercised by a large number of Federal law enforcement and intelligence agencies. In appropriate circumstances, where compliance would not appear to interfere with or adversely affect the law enforcement purposes of this system and the overall law enforcement process, the applicable

exemptions may be waived on a case by case basis.

A notice of system of records for Facility and Perimeter Access Control and Visitor Management is also published in this issue of the **Federal Register**.

List of Subjects in 6 CFR Part 5

Freedom of information; Privacy.

For the reasons stated in the preamble, DHS proposes to amend Chapter I of Title 6, Code of Federal Regulations, as follows:

PART 5—DISCLOSURE OF RECORDS AND INFORMATION

1. The authority citation for Part 5 continues to read as follows:

Authority: 6 U.S.C. 101 *et seq.*; Pub. L. 107–296, 116 Stat. 2135; 5 U.S.C. 301. Subpart A also issued under 5 U.S.C. 552. Subpart B also issued under 5 U.S.C. 552a.

2. Add at the end of Appendix C to Part 5, the following new paragraph ''14'':

Appendix C to Part 5—DHS Systems of Records Exempt From the Privacy Act

* * * * *

14. The Department of Homeland Security—024 Facility and Perimeter Access Control and Visitor Management system of records consists of electronic and paper records and will be used by DHS and its components. DHS/All—024 Facility and Perimeter Access Control and Visitor Management is a repository of information held by DHS in connection with its several and varied missions and functions, including, but not limited to: The enforcement of civil and criminal laws; investigations, inquiries, and proceedings thereunder; and national security and intelligence activities. Facility and Perimeter Access Control and Visitor Management contains information that is collected by, on behalf of, in support of, or in cooperation with DHS and its components and may contain personally identifiable information collected by other Federal, State, local, tribal, foreign, or international government agencies. Pursuant to 5 U.S.C. 552a(k)(1), (2), and (5), this system is exempt from the following provisions of the Privacy Act, subject to the limitations set forth in those subsections: 5 U.S.C. 552a(c)(3), (d), (e)(1), (e)(4)(G), (e)(4)(H), (e)(4)(I), and (f). Exemptions from these particular subsections are justified, on a case-by-case basis to be determined at the time a request is made, for the following reasons:

(a) From subsection (c)(3) (Accounting for Disclosures) because release of the accounting of disclosures could alert the subject of an investigation of an actual or potential criminal, civil, or regulatory violation to the existence of the investigation, and reveal investigative interest on the part of DHS as well as the recipient agency. Disclosure of the accounting would therefore present a serious impediment to law enforcement efforts and/or efforts to preserve national security. Disclosure of the accounting would also permit the individual who is the subject of a record to impede the investigation, to tamper with witnesses or evidence, and to avoid detection or apprehension, which would undermine the entire investigative process.

(b) From subsection (d) (Access to Records) because access to the records contained in this system of records could inform the subject of an investigation of an actual or potential criminal, civil, or regulatory violation, to the existence of the investigation, and reveal investigative interest on the part of DHS or another agency. Access to the records could permit the individual who is the subject of a record to impede the investigation, to tamper with witnesses or evidence, and to avoid detection or apprehension. Amendment of the records could interfere with ongoing investigations and law enforcement activities and would impose an impossible administrative burden by requiring investigations to be continuously reinvestigated. In addition, permitting access and amendment to such information could disclose security-sensitive information that could be detrimental to homeland security.

(c) From subsection (e)(1) (Relevancy and Necessity of Information) because in the course of investigations into potential violations of Federal law, the accuracy of information obtained or introduced occasionally may be unclear or the information may not be strictly relevant or necessary to a specific investigation. In the interests of effective law enforcement, it is appropriate to retain all information that may aid in establishing patterns of unlawful activity.

(d) From subsections (e)(4)(G), (e)(4)(H), and (e)(4)(I) (Agency Requirements), and (f) (Agency Rules) because portions of this system are exempt from the individual access provisions of subsection (d) for the reasons noted above, and therefore DHS is not required to establish requirements, rules, or procedures with respect to such access. Providing notice to individuals with respect to existence of records pertaining to them in the system of records or otherwise setting up procedures pursuant to which individuals may access and view records pertaining to themselves in the system would undermine investigative efforts and reveal the identities of witnesses, and potential witnesses, and confidential informants.

Dated: December 22, 2008.

Hugo Teufel III,

Chief Privacy Officer, Department of Homeland Security.

[FR Doc. E9–935 Filed 1–15–09; 8:45 am]

BILLING CODE 4410–10–P

DEPARTMENT OF AGRICULTURE

Animal and Plant Health Inspection Service

7 CFR Part 340

[Docket No. APHIS–2008–0023]

RIN 0579–AC31

Importation, Interstate Movement, and Release Into the Environment of Certain Genetically Engineered Organisms

AGENCY: Animal and Plant Health Inspection Service, USDA.

ACTION: Proposed rule; reopening of comment period.

SUMMARY: We are reopening the comment period for our proposed rule that would revise our regulations regarding the importation, interstate movement, and environmental release of certain genetically engineered organisms. This action will allow interested persons additional time to prepare and submit comments.

DATES: We will consider all comments that we receive on or before March 17, 2009.

ADDRESSES: You may submit comments by any of the following methods:

- *Federal eRulemaking Portal:* Go to *http://www.regulations.gov/fdmspublic/component/main?main=DocketDetail&d=APHIS-2008-0023* to submit or view comments and to view supporting and related materials available electronically.
- *Postal Mail/Commercial Delivery:* Please send two copies of your comment to Docket No. APHIS–2008–0023, Regulatory Analysis and Development, PPD, APHIS, Station 3A–03.8, 4700 River Road Unit 118, Riverdale, MD 20737–1238. Please state that your comment refers to Docket No. APHIS–2008–0023.
- *Public Forum:* Written and oral comment will be accepted at a public forum held during the comment period. See Public Forums below.

Reading Room: You may read any comments that we receive on this docket in our reading room. The reading room is located in room 1141 of the USDA South Building, 14th Street and Independence Avenue, SW., Washington, DC. Normal reading room hours are 8 a.m. to 4:30 p.m., Monday through Friday, except holidays. To be sure someone is there to help you, please call (202) 690–2817 before coming.

Other Information: Additional information about APHIS and its programs is available on the Internet at *http://www.aphis.usda.gov.*

FOR FURTHER INFORMATION CONTACT: Biotechnology Regulatory Services, APHIS, 4700 River Road Unit 147, Riverdale, MD 20737–1236; (301) 734–5710.

SUPPLEMENTARY INFORMATION: On October 9, 2008, we published in the **Federal Register** (73 FR 60007–60048, Docket No. APHIS–2008–0023) a proposal [1] to revise our regulations regarding the importation, interstate movement, and environmental release of certain genetically engineered (GE) organisms. The proposed revisions would bring the regulations into alignment with provisions of the Plant Protection Act (PPA, 7 U.S.C. 7701 *et seq.*) and update the regulations in response to advances in genetic science and technology and our accumulated experience in implementing the current regulations.

By the time the public comment period closed on November 24, 2008, we had received over 15,000 comments, including requests for APHIS to extend the public comment period. We are currently evaluating all the comments, and it is apparent that additional time for public comment is warranted and that it would be particularly helpful to receive additional comments on a variety of specific issues that have been raised thus far on the proposed rule.

Therefore, we are reopening the comment period on Docket No. APHIS–2008–0023 for an additional 60 days. We will also consider all comments received between November 25, 2008 (the date following the close of the original comment period), and the date of this notice. This action will allow interested persons additional time to prepare and submit comments. While all aspects of the proposal may be addressed by the public, we are particularly seeking additional comments on the issues listed below. In some cases commenters identified concerns about these issues, but did not provide specific suggestions as to how the proposed rule could be modified to address these concerns. By reopening the comment period, we hope to elicit more specific information and detailed suggestions regarding these issues.

Issue 1: Scope of the regulation and which GE organisms should be regulated. Section 340.0 of the proposed rule lists a number of criteria or factors to consider to identify those GE organisms which would be subject to the regulations. The proposal stated that in many cases a person could correctly apply the criteria to determine whether a specific GE organism is subject to the regulations, and stated that consultation with APHIS would be available in cases where it was not readily apparent whether or not a GE organism is regulated. Some commenters questioned whether the proposed scope could be interpreted with reasonable certainty. Some commenters thought the scope was effectively too broad and would regulate too many harmless GE organisms, while others thought it was too narrow and would exempt GE organisms that should be regulated. Some commenters stated that all GE plants should be subject to the regulations. We welcome additional comments on these subjects, including suggestions on what the criteria should be for determining the scope and applicability of the regulations and suggestions on which specific GE organisms should be included or excluded from the regulations based upon the potential risks consistent with the authorities provided in the PPA.

Issue 2: Incorporation of the Plant Protection Act noxious weed provisions. The proposed rule included APHIS evaluating certain GE organisms as a noxious weed risk pursuant to the PPA definition of ''noxious weed'' including consideration of noxious weed attributes in the scope of the regulation and in the decision making standards proposed in the regulations. Some comments suggested that this aspect of the proposal overestimates the likelihood that the use of GE techniques will create a noxious weed, whereas other comments suggested that the proposal did not pay enough attention to noxious weed attributes. Other comments broadly discussed the utility of the noxious weed authority of the PPA and how APHIS should apply it in these regulations. We welcome additional comments on how APHIS should include and apply the PPA's noxious weed provisions in the regulations in order to provide an appropriate level of protection based upon the potential risks consistent with the authorities provided in the PPA.

Issue 3: Elimination of notification procedure and revision of the permit procedure. The proposed rule would eliminate the notification procedure for authorizing importations, interstate movements, and releases into the environment, and instead use the permitting procedure for these activities. The proposal provided categories that APHIS would use for environmental release permits. Commenters raised many questions about the consequences of eliminating notifications. They also raised questions about the clarity of the requirements associated with the proposed permit categories. Some commenters expressed concern that the proposal would remove from the regulations firm timeframes for APHIS administrative action on applications, and that the proposed generalized timeframes were much longer than the timeframes under the current notification procedure. Several commenters saw this proposed change as detrimental to planning activities, especially for conducting field tests. Some commenters raised concerns that the proposed changes would substantially increase the data collection and recordkeeping burden on all applicants and responsible persons, whereas the current recordkeeping requirements for notifications are less than the requirements for permits. We welcome additional comments on these issues, including specific suggestions on how the regulations could achieve the necessary level of protection against the introduction and dissemination of plant pests or noxious weeds while minimizing any additional compliance burden for applicants or delay in processing applications.

Issue 4: Environmental release permit categories and regulation of GE crops that produce pharmaceutical and industrial compounds. In the proposal, the categories for environmental release permits would be an initial administrative sorting done by APHIS prior to a full evaluation and determination of appropriate permit conditions for that particular permit. Most of the comments focused on the four categories APHIS proposed for GE plants. The two primary factors APHIS identified as most relevant to define its initial sorting system for environmental release permits were (1) the ability of the unmodified recipient plant species to persist in the wild and (2) the potential of the engineered trait to cause harm, injury, or damage, as described in the definitions of plant pest and noxious weed. The categories in the proposal were not based on intended use of the GE plant, but rather its properties. Many commenters, however, stated that they wanted APHIS to act on the intended use of the GE plant and ban all environmental releases of GE plants that are intended to produce compounds to be used in pharmaceutical or industrial uses, especially if that plant species is also used for the production of food or feed. We are seeking further comment on whether or how an intended use to produce pharmaceutical or industrial compounds contributes to an increase in plant pest or noxious weed risks. We

[1] To view the proposed rule, supporting documents, and any comments we have received, go to *http://www.regulations.gov/fdmspublic/component/main?main=DocketDetail&d=APHIS-2008-0023.*

welcome additional comments on all these issues, including specific suggestions on how the regulations could best provide the appropriate level of protection based upon the potential risks consistent with the authorities provided in the PPA.

Public Forums

In order to provide additional opportunities for the public to comment on the proposed rule, APHIS held public forums on the proposal in Davis, CA, on October 28, 2008; in Kansas City, MO, on October 30, 2008; and Riverdale, MD, on November 13, 2008. APHIS intends to hold one additional public forum on the proposed rule during the extended public comment period. The time and place of the public forum will be announced in the **Federal Register**.

Authority: 7 U.S.C. 7701–7772 and 7781–7786; 31 U.S.C. 9701; 7 CFR 2.22, 2.80, and 371.3.

Done in Washington, DC, this 13th day of January 2009.

Cindy J. Smith,

Administrator, Animal and Plant Health Inspection Service.

[FR Doc. E9–905 Filed 1–15–09; 8:45 am]

BILLING CODE 3410–34–P

DEPARTMENT OF TRANSPORTATION

Federal Aviation Administration

14 CFR Part 71

[Docket No. FAA–2008–1229; Airspace Docket No. 08–ASW–26]

Proposed Amendment of Class E Airspace; Natchitoches, LA

AGENCY: Federal Aviation Administration (FAA), DOT.

ACTION: Notice of proposed rulemaking (NPRM).

SUMMARY: This action proposes to amend Class E airspace at Natchitoches, LA. Additional controlled airspace is necessary to accommodate new Standard Instrument Approach Procedures (SIAPs) at Natchitoches Regional Airport, Natchitoches, LA. The FAA is taking this action to enhance the safety and management of Instrument Flight Rules (IFR) aircraft operations at Natchitoches Regional Airport.

DATES: 0901 UTC. Comments must be received on or before March 2, 2009.

ADDRESSES: Send comments on this proposal to the U.S. Department of Transportation, Docket Operations, 1200 New Jersey Avenue, SE., West Building Ground Floor, Room W12–140, Washington, DC 20590–0001. You must identify the docket number FAA–2008–1229/Airspace Docket No. 08–ASW–26, at the beginning of your comments. You may also submit comments on the Internet at *http://www.regulations.gov*. You may review the public docket containing the proposal, any comments received, and any final disposition in person in the Dockets Office between 9 a.m. and 5 p.m., Monday through Friday, except Federal holidays. The Docket Office (telephone 1–800–647–5527), is on the ground floor of the building at the above address.

FOR FURTHER INFORMATION CONTACT: Scott Enander, Central Service Center, Operations Support Group, Federal Aviation Administration, Southwest Region, 2601 Meacham Blvd., Fort Worth, TX 76193–0530; telephone: (817) 222–5582.

SUPPLEMENTARY INFORMATION:

Comments Invited

Interested parties are invited to participate in this proposed rulemaking by submitting such written data, views, or arguments, as they may desire. Comments that provide the factual basis supporting the views and suggestions presented are particularly helpful in developing reasoned regulatory decisions on the proposal. Comments are specifically invited on the overall regulatory, aeronautical, economic, environmental, and energy-related aspects of the proposal. Communications should identify both docket numbers and be submitted in triplicate to the address listed above. Commenters wishing the FAA to acknowledge receipt of their comments on this notice must submit with those comments a self-addressed, stamped postcard on which the following statement is made: ''Comments to Docket No. FAA–2008–1229/Airspace Docket No. 08–ASW–26.'' The postcard will be date/time stamped and returned to the commenter.

Availability of NPRMs

An electronic copy of this document may be downloaded through the Internet at *http://www.regulations.gov*. Recently published rulemaking documents can also be accessed through the FAA's Web page at *http://www.faa.gov/airports_airtraffic/air_traffic/publications/airspace_amendments/*.

Additionally, any person may obtain a copy of this notice by submitting a request to the Federal Aviation Administration (FAA), Office of Air Traffic Airspace Management, ATA–400, 800 Independence Avenue, SW., Washington, DC 20591, or by calling (202) 267–8783. Communications must identify both docket numbers for this notice. Persons interested in being placed on a mailing list for future NPRMs should contact the FAA's Office of Rulemaking (202) 267–9677, to request a copy of Advisory Circular No. 11–2A, Notice of Proposed Rulemaking Distribution System, which describes the application procedure.

The Proposal

This action proposes to amend Title 14, Code of Federal Regulations (14 CFR), Part 71 by adding additional Class E airspace for SIAPs operations at Natchitoches Regional Airport, Natchitoches, LA. The area would be depicted on appropriate aeronautical charts.

Class E airspace areas are published in Paragraph 6005 of FAA Order 7400.9S, dated October 3, 2008, and effective October 31, 2008, which is incorporated by reference in 14 CFR 71.1. The Class E airspace designation listed in this document would be published subsequently in the Order.

The FAA has determined that this proposed regulation only involves an established body of technical regulations for which frequent and routine amendments are necessary to keep them operationally current. It, therefore, (1) Is not a ''significant regulatory action'' under Executive Order 12866; (2) is not a ''significant rule'' under DOT Regulatory Policies and Procedures (44 FR 11034; February 26, 1979); and (3) does not warrant preparation of a Regulatory Evaluation as the anticipated impact is so minimal. Since this is a routine matter that will only affect air traffic procedures and air navigation, it is certified that this rule, when promulgated, will not have a significant economic impact on a substantial number of small entities under the criteria of the Regulatory Flexibility Act. The FAA's authority to issue rules regarding aviation safety is found in Title 49 of the U.S. Code. Subtitle 1, Section 106 describes the authority of the FAA Administrator. Subtitle VII, Aviation Programs, describes in more detail the scope of the agency's authority. This rulemaking is promulgated under the authority described in Subtitle VII, Part A, Subpart I, Section 40103. Under that section, the FAA is charged with prescribing regulations to assign the use of airspace necessary to ensure the safety of aircraft and the efficient use of airspace. This regulation is within the scope of that authority as it would add additional controlled airspace at

Natchitoches Regional Airport, Natchitoches, LA.

List of Subjects in 14 CFR Part 71

Airspace, Incorporation by reference, Navigation (Air).

The Proposed Amendment

In consideration of the foregoing, the Federal Aviation Administration proposes to amend 14 CFR Part 71 as follows:

PART 71—DESIGNATION OF CLASS A, B, C, D, AND E AIRSPACE AREAS; AIRWAYS; ROUTES; AND REPORTING POINTS

1. The authority citation for Part 71 continues to read as follows:

Authority: 49 U.S.C. 106(g); 40103, 40113, 40120; E.O. 10854, 24 FR 9565, 3 CFR, 1959–1963 Comp., p. 389.

§ 71.1 [Amended]

2. The incorporation by reference in 14 CFR 71.1 of Federal Aviation Administration Order 7400.9S, Airspace Designations and Reporting Points, dated October 3, 2008, and effective October 31, 2008, is amended as follows:

Paragraph 6005 Class E Airspace areas extending upward from 700 feet or more above the surface of the earth.

* * * * *

ASW LA E5 Natchitoches, LA [Amended]

Natchitoches Regional Airport
(Lat. 31°44′09″ N., long. 93°05′57″ W.)

That airspace extending upward from 700 feet above the surface within a 6.6-mile radius of Natchitoches Regional Airport, and within 4 miles each side of the 166° bearing from the airport extending from the 6.6-mile radius to 11.4 miles northeast of the airport.

* * * * *

Issued in Fort Worth, TX, on January 7, 2009.

Walter L. Tweedy,

Acting Manager, Operations Support Group, ATO Central Service Center.

[FR Doc. E9–822 Filed 1–15–09; 8:45 am]

BILLING CODE 4910–13–P

DEPARTMENT OF THE TREASURY

Internal Revenue Service

26 CFR Part 41

[Reg–116699–07]

RIN 1545–BG63

Highway Use Tax; Sold Vehicles and Electronic Filing

AGENCY: Internal Revenue Service (IRS), Treasury.

ACTION: Notice of Proposed Rulemaking.

SUMMARY: This document contains proposed regulations that provide guidance on mandatory electronic filing of Form 2290, ''Heavy Highway Vehicle Use Tax Return,'' for 25 or more vehicles; credits or refunds for sold, destroyed or stolen vehicles; and paying tax on the use of certain second-hand vehicles. The regulations reflect changes to the law made by the American Jobs Creation Act of 2004. The regulations would affect owners and operators of highway motor vehicles with a taxable gross weight of 55,000 pounds or more.

DATES: Written or electronic comments and requests for a public hearing must be received by April 16, 2009.

ADDRESSES: Send submissions to: CC:PA:LPD:PR (REG–116699–07), Room 5203, Internal Revenue Service, PO Box 7604, Ben Franklin Station, Washington, DC 20044. Submissions may be hand-delivered to: CC:PA:LPD:PR Monday through Friday between the hours of 8 a.m. and 4 p.m. to: CC:PA:LPD:PR (REG–116699–07), Courier's Desk, Internal Revenue Service, 1111 Constitution Avenue, NW., Washington, DC, or sent electronically via the Federal eRulemaking Portal at *http:www.regulations.gov* (IRS REG–116699–07).

FOR FURTHER INFORMATION CONTACT: Concerning the proposed regulations, Taylor Cortright, (202) 622–3130; concerning submissions of comments and requests for a public hearing, *Oluwafunmilayo.P.Taylor@irscounsel.treas.gov*, or (202) 622–7180 (not toll-free numbers).

SUPPLEMENTARY INFORMATION:

Background

This document contains proposed amendments to the Excise Tax on Use of Certain Highway Motor Vehicles (26 CFR Part 41) under section 4481 of the Internal Revenue Code (Code). Section 4481 was amended by section 867 of the American Jobs Creation Act of 2004, Public Law 108–357 (118 Stat. 1418) to require electronic filing of a return for 25 or more highway motor vehicles, allow a proration of the tax for vehicles that are sold, and eliminate the ability to pay the tax in installments.

Explanation of Provisions

Section 4481 imposes an annual tax on the use of highway vehicles with a taxable gross weight of 55,000 pounds or more. For this purpose, the tax year is from July 1 to the following June 30. For vehicles used in July, the tax is due on August 31 and is filed on Form 2290, ''Heavy Highway Vehicle Use Tax Return.'' For vehicles first used in later months of the tax year, the tax is prorated. Thus, for example, for a vehicle that is not used in July but is used in August, the tax is 11/12 of the full rate and the return is due September 30. After a return is filed with the IRS, the IRS will return Schedule 1 of Form 2290 to the taxpayer as proof of payment of the tax. Under 23 U.S.C. 141, state governments are required to receive proof of payment of the tax as a condition of registering a vehicle for highway use.

Section 4481(e), as added by the American Jobs Creation Act, provides that any taxpayer that files a highway use tax return for 25 or more vehicles for any taxable period must file the return electronically. The proposed regulations provide that submitting a Form 2290 for 25 or more vehicles on paper rather than electronically constitutes a failure to file for purposes of the penalty under section 6651. In addition, if a Form 2290 for 25 or more vehicles is filed on paper rather than electronically, the regulations provide that the IRS will not return to the taxpayer the Schedule 1 (Form 2290), which is necessary to register the vehicle with the State. The regulations provide guidance on the vehicles that are taken into account in determining whether the ''25 or more'' requirement applies.

The regulations provide guidance for claiming a credit or refund of the statutory overpayment upon the sale of a vehicle. The regulations also clarify that the triggering event for overpayments, and hence the ability to claim a prorated credit or refund of tax paid, is the sale, destruction, or theft of a vehicle.

The regulations clarify that when a vehicle is sold during a tax period, separate and prorated taxes are imposed on the use of the vehicle before the sale and the use after the sale. The regulations provide rules for the computation of these taxes.

Special Analyses

It has been determined that this notice of proposed rulemaking is not a significant regulatory action as defined in Executive Order 12866. Therefore, a regulatory assessment is not required. It has also been determined that section 553(b) of the Administrative Procedure Act (5 U.S.C. chapter 5) does not apply to these regulations.

Pursuant to the Regulatory Flexibility Act (5 U.S.C. chapter 6), it is hereby certified that this regulation will not have a significant economic impact on a substantial number of small entities. The regulations affect owners and

operators of highway motor vehicles with a taxable gross weight of 55,000 pounds or more, some of which may be small entities. Although a number of small entities may be subject to the requirements of this rule, any economic impact is minimal. First, the regulations merely implement the electronic filing requirement under section 4481 and any cost associated with electronic filing is minimal. In addition, the regulations provide guidance for claiming a refund or credit when a vehicle is sold during the tax year. In order to make the claim, the taxpayer must submit Form 2290 or Form 8849, ''Claim for Refund of Excise Taxes.'' The information to complete these forms is readily available to the taxpayer and the forms take little time to complete. Without the claim information, the IRS could not determine taxpayer eligibility or determine the accuracy of the claim. Accordingly, a regulatory flexibility analysis is not required.

Pursuant to section 7805(f) of the Code, this regulation has been submitted to the Chief Counsel for Advocacy of the Small Business Administration for comment on its impact on small entities.

Comments and Requests for a Public Hearing

Before these proposed regulations are adopted as final regulations, consideration will be given to any written (a signed original and eight (8) copies) or electronic comments that are submitted timely to the IRS. The IRS and the Treasury Department request comments on the clarity of the proposed regulations and how they may be made easier to understand. All comments will be available for public inspection and copying. A public hearing will be scheduled if requested in writing by any person that timely submits written comments. If a public hearing is scheduled, notice of the date, time, and place for the hearing will be published in the **Federal Register**.

Drafting Information

The principal author of these regulations is Taylor Cortright, Office of the Associate Chief Counsel (Passthroughs and Special Industries). However, other personnel from the IRS and the Treasury Department participated in their development.

List of Subjects in 26 CFR Part 41

Excise taxes, Motor vehicles, Reporting and recordkeeping requirements.

Proposed Amendments to the Regulations

Accordingly, 26 CFR part 41 is proposed to be amended as follows:

PART 41—EXCISE TAX ON USE OF CERTAIN HIGHWAY MOTOR VEHICLES

Paragraph 1. The authority citation for part 41 is revised to read as follows:

Authority: 26 U.S.C. 7805.

Section 41.4482(b)–1 also issued under 26 U.S.C. 4482(b).

Section 41.4483–1 also issued under 26 U.S.C. 4483(a).

Section 41.4483–2 also issued under 26 U.S.C. 4483(c).

Section 41.4483–3 also issued under 26 U.S.C. 4483(d).

Section 41.6001–1 also issued under 26 U.S.C. 6001.

Section 41.6001–2 also issued under 26 U.S.C. 6001.

Section 41.6001–3 also issued under sec. 507, Public Law 100–17 (101 Stat. 260).

Section 41.6011(a)–1 also issued under 26 U.S.C. 6011(a).

Section 41.6071(a)–1 also issued under 26 U.S.C. 6071 (a).

Section 41.6091–1 also issued under 26 U.S.C. 6091(a).

Section 41.6101–1 also issued under 26 U.S.C. 6101.

Section 41.6109–1 also issued under 26 U.S.C. 6109(a).

Section 41.6151(a)–1 also issued under 26 U.S.C. 6151(a).

Par. 2. Section 41.4481–1 is amended by:

1. Revising the section heading.
2. Removing the third sentence from paragraph (b).
3. Adding headings to paragraphs (c)(1), (c)(2), and (c)(3).
4. Revising paragraphs (c)(4) and (c)(5).
5. Removing paragraphs (c)(6) and (d).
6. Redesignating paragraph (e) as paragraph (d) and revising the introductory text.
7. In newly-redesignated paragraph (d), revising *Example (3)* and adding *Example (4)*.
8. Adding paragraph (e).

The additions and revisions read as follows:

§ 41.4481–1 Imposition and computation of tax.

* * * * *

(c) * * *

(1) In general. * * *

(2) Certain prorated taxable periods. * * *

(3) *Increase in taxable gross weight during the taxable period.* * * *

(4) *Prorated taxable period for sold, destroyed, or stolen vehicles*—(i) *In general.* The tax on a taxpayer's use of a highway vehicle for a taxable period is determined under paragraph (c)(4)(ii) of this section if—

(A) The vehicle is destroyed or stolen before the first day of the last month in the taxable period and is not subsequently used during the period; or

(B) The taxpayer sells the vehicle before the first day of the last month in the taxable period and does not subsequently use the vehicle during the period.

(ii) *Computation of tax.* If the tax on a taxpayer's use of a highway vehicle for a taxable period is determined under this paragraph (c)(4)(ii), the tax is calculated proportionately from the first day of the month in the period in which the first use of the highway motor vehicle occurs to and including the last day of the month in which the highway motor vehicle was sold, destroyed or stolen.

(iii) *Overpayment.* If a taxpayer's liability for the tax on the use of a highway vehicle for a taxable period is determined under paragraph (c)(4)(ii) of this section, any tax the taxpayer paid under section 4481(a) on the use of the vehicle for such period in excess of the tax calculated under paragraph (c)(4)(ii) of this section is an overpayment of tax.

(iv) *Definition of destroyed vehicle.* For purposes of this paragraph (c)(4), a highway motor vehicle is destroyed if the vehicle is damaged due to an accident or other casualty to such an extent that it is not economical to rebuild.

(v) *Form and content of claim.* A claim for refund of an overpayment described in paragraph (c)(4)(iii) of this section must be made on Form 8849, ''Claim for Refund of Excise Taxes'' (or such other form as the Commissioner may designate) in accordance with the instructions for that form. A claim for a credit must be made on Form 2290, ''Heavy Highway Vehicle Use Tax Return,'' (or such other form as the Commissioner may designate) in accordance with the instructions for that form. A claim for refund or credit for any vehicle must include—

(A) The Vehicle Identification Number (VIN) and taxable gross weight of the vehicle;

(B) The date of the sale, destruction or theft of the vehicle; and

(C) If the vehicle was sold, the name and address of the purchaser of the vehicle.

(vi) *Tax on use of second-hand vehicles.* If a vehicle is sold during the taxable period and a credit or refund of the tax imposed by section 4481 is allowable upon the sale under paragraph (c)(4)(iii) of this section, tax is imposed on the use of the vehicle after the sale and before the end of the taxable period.

(vii) *Computation of tax on second-hand vehicles.* The tax under paragraph (c)(4)(vi) of this section on the use of a vehicle after a sale upon which a credit or refund is allowable is computed by multiplying the amount of tax that would be due for a full taxable period as computed under paragraph (c)(1) of this section by a fraction. This fraction shall have as its numerator the number of months in the period from the month of the first taxable use of the vehicle after the sale (the month after such month if the first taxable use after the sale occurs in the month of the sale) through the end of the taxable period and as its denominator the number of months in the entire taxable period. For purposes of determining the fraction, any part of a month is counted as a full month. (*See* example (3) of paragraph (d) of this section.)

(5) *Decrease in taxable gross weight, discontinued use, or converted use.* The computation of the tax is not affected, and no right to a credit or refund of any tax paid under section 4481 arises, if in any taxable period—

(i) The taxable gross weight of a highway motor vehicle is decreased;

(ii) The use of a highway motor vehicle is discontinued (for reasons other than sale, destruction, or theft as described in paragraph (c)(4) of this section); or

(iii) The highway motor vehicle is converted to a use which is exempt from the tax imposed by section 4481(a).

(d) *Examples.* The application of §§ 41.4481–1, 41.4481–2 and 41.4482(c)–1(c) may be illustrated by the following examples:

* * * * *

Example (3). (i) In July 2008, X uses a vehicle with a taxable gross weight of 70,000 pounds. The vehicle is not a logging vehicle. The vehicle is registered in X's name so X pays the tax imposed by section 4481 of $430 for the taxable period ending June 30, 2009. On January 2, 2009, X sells the vehicle to Y. X's tax for the taxable period is determined under this paragraph (c)(4) and is based on the number of months in the period from the beginning of July 2008 (the month of first use in the taxable period) through the end of January 2009 (the month of the sale). Thus, X's tax for the period is $250.83 (7/12 of $430) and X may claim a refund of $179.17 ($430.00 − $250.83) immediately after X sells the vehicle.

(ii) On January 23, 2009, Y uses the vehicle. Y is liable for tax on the use of the vehicle during the taxable period ending June 30, 2009. Y's first use of the vehicle occurs in the month of the sale. Accordingly, Y's tax is based on the number of months in the period from February (the month following the month of the first taxable use) through June, and Y owes a section 4481 tax of $179.17 (5/12 of $430) for the taxable period ending June 30, 2009.

Example (4). Assume the same facts as in Example (3) except that on January 2, 2009, X sells the vehicle to Dealer, a dealer in highway motor vehicles. X may claim a refund of $179.17. Dealer operates the vehicle exclusively for the purpose of demonstration, which is not a ''use'' of the vehicle under § 41.4482(c)–1(c). On May 2, 2009, Dealer sells the vehicle to Y. Dealer does not owe a section 4481 tax and may not claim a refund. Y's first taxable use of the vehicle occurs on May 3, 2009. Y's first taxable use of the vehicle does not occur in the month of a sale upon which a credit or refund is allowable. Accordingly, Y's tax is based on the number of months in the period from May (the month of the first taxable use after the sale) through June, and Y owes a section 4481 tax of $71.67 (2/12 of $430) for the taxable period ending June 30, 2009.

(e) *Effective/Applicability date.* This section applies on and after the date of publication of the Treasury decision adopting these rules as final regulations in the **Federal Register**. For rules applicable before that date, *see* 26 CFR § 41.4481–1 (revised as of April 1, 2008).

Par. 3. Section 41.4481–2 is amended by:

1. Removing the language ''or any installment payment of the tax'' in paragraph (a)(1)(i)(D).

2. Revising paragraph (a)(2).

3. Adding paragraphs (a)(3) and (a)(4).

4. Removing paragraph (c).

The addition and revisions read as follows:

§ 41.4481–2 Persons liable for tax.

(a) * * *

(2) If a vehicle is sold during the taxable period and a credit or refund is allowable upon the sale under § 41.4481–1(c)(4)(iii), paragraph (a)(1) of this section is applied with the following modifications:

(i) For purposes of determining the person liable for the tax determined under § 41.4481–1(c)(4)(ii), each reference to a taxable period in paragraph (a)(1) of this section is treated as a reference to the period that begins on the first day of the taxable period in which the vehicle is sold and ends on the date of the sale.

(ii) For purposes of determining the person liable for the tax determined under § 41.4481–1(c)(4)(vi), each reference to a taxable period in paragraph (a)(1) of this section is treated as a reference to the period that begins on the date of the sale and ends on the last day of the taxable period in which the vehicle is sold.

(3) The application of this section may be illustrated by *Example (3)* in § 41.4481–1(d).

(4) Effective/Applicability date. This section applies on and after the date of publication of the Treasury decision adopting these rules as final regulations in the **Federal Register**. For rules applicable before that date, *see* 26 CFR 41.4481–2 (revised as of April 1, 2008).

* * * * *

Par. 4. Section 41.4483–3(f), fourth sentence, is amended by removing the language ''to the extent that the tax or an installment payment of the tax has'' and adding ''(determined in the case of a transfer described in § 41.4481–1(c)(4)(i) under § 41.4481–1(c)(4)(ii)) to the extent that the tax has'' in its place.

§ 41.4483–7 [Removed]

Par. 5. Section 41.4483–7 is removed.

Par. 6. Section 41.6001–1 is amended to read as follows:

1. In the first sentence of paragraph (a), the language ''district director'' is removed and ''Commissioner'' is added in its place.

2. In paragraph (a)(3), the language ''In the case of any such vehicle acquired after June 30, 1956, the date'' is removed and ''The date'' is added in its place.

Par. 7. Section 41.6001–2 is amended as follows:

1. In paragraph (a), the third and fourth sentences are removed.

2. Paragraph (c)(1) is revised.

3. In paragraph (c)(2), the third sentence is revised.

4. Paragraph (e) is added.

The revisions and addition read as follows:

§ 41.6001–2 Proof of payment for State registration purposes.

* * * * *

(c) * * *

(1) *In general.* The proof of payment required in paragraph (b) of this section shall consist of a receipted Schedule 1 (Form 2290 ''Heavy Highway Vehicle Use Tax Return'') that is returned by the Internal Revenue Service, by mail or electronically, to a taxpayer that files a return of tax under section 4481(a), meets the requirements of § 41.6011(a)–1, and pays the amount of tax due with such return. A photocopy of such receipted Schedule 1 shall also serve as proof of payment. Such Schedule 1 shall serve as proof of suspension of such tax under § 41.4483–3 for the number of vehicles entered in that part of the Schedule 1 designated for vehicles for which tax has been suspended. The vehicle identification number of the vehicle being registered must appear on the Schedule 1 (or an attached page) in order for the Schedule 1 to be a valid proof of payment for such vehicle.

(2) * * * However, a State shall not accept any substitute proof of payment if 25 or more vehicles are reported for

purposes of § 41.6011(a)–1(c) on the Form 2290, ''Heavy Highway Vehicle Use Tax Return,'' for the vehicle being registered.

* * * * *

(e) *Effective/Applicability date.* This section applies to registrations of highway motor vehicles pursuant to applications that are received by a State on or after the date of publication of the Treasury decision adopting these rules as final regulations in the **Federal Register**. For this purpose, an application for registration that is mailed will be considered to be received by a State on the date on which it is postmarked. For rules applicable with respect to applications received before that date, see 26 CFR 41.6001–2 (revised as of April 1, 2008).

Par. 8. Section 41.6011(a)–1 is amended by adding paragraphs (a)(4) and (c) to read as follows:

§ 41.6011(a)–1 Returns.

(a) * * *

(4) A person that is liable for tax under § 41.4481–2(a)(1)(i)(A), (B), (C), or (D), after taking into account the modification required under § 41.4481–2(a)(2), is treated as liable for tax by the same provision of § 41.4481–2(a)(1)(i) for purposes of this section and must file a return.

* * * * *

(c) *Required use of electronic filing*—(1) *Rule for 25 or more vehicles.* A person that files any return reporting 25 or more vehicles must file the return electronically, as prescribed by the Commissioner. For this purpose, the number of vehicles reported on a return is the total number of vehicles for which tax is reported and does not include vehicles for which a suspension from tax is claimed.

(2) *Effect of failure to file.* If a person fails to file a return electronically when required to do so by this section, the person has failed to file the return. In such a case, the Internal Revenue Service (IRS) will not return a receipted Schedule 1 (Form 2290 ''Heavy Highway Vehicle Use Tax Return'') as proof of payment as defined in § 41.6001–2(c). See section 6651 for the addition to tax for failure to file a tax return.

(3) *Examples.* The application of this paragraph (c) may be illustrated by the following examples:

Example 1. A has 100 vehicles registered in its name, all of which have a taxable gross weight in excess of 55,000 pounds. Seventy-five of the vehicles are in use on July 1, 2009. Twenty-five are in dead storage as described in 41.4482(c)–1(c). The vehicles in dead storage are not in use and they are not listed on the Schedule 1. A files Form 2290 electronically for the 75 vehicles in use on July 1 and receives a receipted Schedule 1. On August 23, 2009, A uses the remaining 25 vehicles. A does not file Form 2290 electronically but uses a paper Form 2290. A has failed to file a return as required by section 4481(e) for the remaining 25 vehicles. Accordingly, the IRS does not return the receipted Schedule 1 (Form 2290) for those vehicles, and A may be liable for additions to tax under section 6651.

Example 2. Assume the same facts as in Example (1) except that on August 23, 2009, A uses 15 of the vehicles that were not used in July. The remaining 10 vehicles are not used in August. A does not file Form 2290 electronically but uses a paper Form 2290. A has correctly filed and the IRS returns the receipted Schedule 1 (Form 2290) to A for 15 vehicles.

(4) Effective/Applicability date. This paragraph (c) applies to returns filed after the date of publication of the Treasury decision adopting these rules as final regulations in the **Federal Register**.

Par. 9. Section 41.6071(a)–1 is amended by adding paragraph (c) to read as follows:

§ 41.6071(a)-1 Time for filing returns.

* * * * *

(c) *Effect of sale during taxable period.* A person that is liable for tax under § 41.4481–2(a)(1)(i)(A), (B), (C), or (D) after taking into account the modification required under § 41.4481–2(a)(2) is treated as liable for tax under the same provision of § 41.4481–2(a)(1)(i) for purposes of this section.

§ 41.6156–1 [Removed]

Par. 10. Section 41.6156–1 is removed.

Linda E. Stiff,

Deputy Commissioner for Services and Enforcement.

[FR Doc. E9–857 Filed 1–15–09; 8:45 am]

BILLING CODE 4830–01–P

DEPARTMENT OF JUSTICE

Bureau of Prisons

28 CFR Part 548

[BOP–1150–P]

RIN 1120–AB

Religious Beliefs and Practices: Chapel Library Materials

AGENCY: Bureau of Prisons, Justice.

ACTION: Proposed rule.

SUMMARY: The Bureau of Prisons (Bureau) amends its regulations on religious beliefs and practices to add a new regulation regarding chapel library materials. The regulations are necessary to notify inmates that certain materials that could incite, promote, or otherwise suggest the commission of violence or criminal activity may be excluded from chapel libraries. This change is also being made in connection with passage of the Second Chance Act.

DATES: Comments are due by March 17, 2009.

ADDRESSES: Written comments should be submitted to the Rules Unit, Office of General Counsel, Bureau of Prisons, 320 First Street, NW., Washington, DC 20534. You may view an electronic version of this regulation at *http://www.regulations.gov.* You may also comment by using the *http://www.regulations.gov* comment form for this regulation. When submitting comments electronically you must include the BOP Docket No. in the subject box.

FOR FURTHER INFORMATION CONTACT: Sarah Qureshi, Office of General Counsel, Bureau of Prisons, phone (202) 307–2105.

SUPPLEMENTARY INFORMATION:

Posting of Public Comments

Please note that all comments received are considered part of the public record and made available for public inspection online at *http://www.regulations.gov.* Such information includes personal identifying information (such as your name, address, etc.) voluntarily submitted by the commenter.

If you want to submit personal identifying information (such as your name, address, etc.) as part of your comment, but do not want it to be posted online, you must include the phrase ''PERSONAL IDENTIFYING INFORMATION'' in the first paragraph of your comment. You must also locate all the personal identifying information you do not want posted online in the first paragraph of your comment and identify what information you want redacted.

If you want to submit confidential business information as part of your comment but do not want it to be posted online, you must include the phrase ''CONFIDENTIAL BUSINESS INFORMATION'' in the first paragraph of your comment. You must also prominently identify confidential business information to be redacted within the comment. If a comment has so much confidential business information that it cannot be effectively redacted, all or part of that comment may not be posted on *http://www.regulations.gov.*

Personal identifying information identified and located as set forth above will be placed in the agency's public docket file, but not posted online. Confidential business information identified and located as set forth above will not be placed in the public docket file. If you wish to inspect the agency's public docket file in person by appointment, please see the **FOR FURTHER INFORMATION CONTACT** paragraph.

Chapel Library Materials

The Bureau amends its regulations on religious beliefs and practices to add a new regulation (Section 548.21) regarding chapel library materials. The regulations are necessary to notify inmates that certain materials that could incite, promote, or otherwise suggest the commission of violence or criminal activity may be excluded from chapel libraries. This change is also being made in connection with section 214 of the Second Chance Act of 2007, approved April 9, 2008, (Pub. L. 110–199; 122 Stat. 657) (''Second Chance Act'').

In addition to the Second Chance Act, concerns related to chapel libraries were also raised in an April 2004 report from the Office of the Inspector General (OIG) examining Bureau religious services. The OIG report stated that exclusions of material from Bureau chapel libraries are necessary to prevent criminal activity and radicalization of inmates. The OIG report indicated that terrorist groups are likely to attempt to radicalize and recruit inmates in the United States ''because they may be predisposed to violence, feel disenfranchised from society, desire power and influence, seek revenge against those who incarcerated them, be hostile towards authority and the United States, or cling to a radical or extremist religious 'family.' '' (OIG Report, April 2004, page 7.)

As a matter of correctional security and management, it is essential that the Bureau be cognizant of the risks of unrest within prisons. Violence among particular inmates or groups of inmates, who must live together, jeopardizes the safety of inmates and staff, as well as potentially involving the destruction of government property. Under 18 U.S.C. 4042(a) the Bureau is specifically charged with providing for the safekeeping and protection of inmates. In carrying out this duty the Bureau must ensure that materials provided to inmates will not promote violence or criminal activity, thereby endangering the safety, security, and good order of Bureau facilities, and the protection of the public. In addition, under 28 CFR 548.15, no one may ''disparage the religious beliefs of an inmate * * *'' The Bureau is very aware of the sensitivity related to religious issues and the real possibility for strife to be fostered in this context.

Section 548.21(a) of the proposed rule states that the Bureau maintains chapel library materials for inmates to pursue religious beliefs and practices while in Bureau custody consistent with ensuring that such materials do not jeopardize the safety, security, or orderly operation of Bureau facilities, or protection of the public. The Bureau maintains custody of more than 200,000 inmates in 114 facilities nationwide. All Bureau facilities maintain chapels for inmate religious activities and chapel libraries that provide inmates with access to religious books, audiotapes, and videos relating to many different religions. The Bureau recognizes the importance of providing inmates with materials necessary to support their pursuit of religious interests. However, the Bureau must evaluate chapel library materials to ensure that the safety of inmates, staff, and the public are not adversely affected.

Therefore, based on the criteria listed in the Second Chance Act, subparagraph (b) of the proposed rule lists possible reasons for excluding chapel library material. Generally, materials may be excluded from the chapel library if the material could incite, promote, or otherwise suggest the commission of violence or criminal activity. This language derives from section 214 of the Second Chance Act, which states that ''the Bureau of Prisons may restrict access to * * * (1) Any materials in a chapel library that seek to incite, promote, or otherwise suggest the commission of violence or criminal activity; and (2) any other materials prohibited by any other law or regulation.'' Section 214 also states that ''[n]othing in this section shall be construed to impact policies of the Bureau of Prisons related to access by specific prisoners to materials for security, safety, sanitation, or disciplinary reasons.''

Subparagraph (c) explains that inciting, promoting, or otherwise suggesting the commission of violence or criminal activity includes: (1) Advocating or fostering violence, vengeance, or hatred toward particular religious, racial, or ethnic groups; or (2) urging the overthrow or destruction of the United States.

Therefore, to implement the provisions of the Second Chance Act, as well as the Bureau's statutory and regulatory duties, the Bureau proposes this addition to its regulations regarding religious beliefs and practices.

Executive Order 13132

This regulation will not have substantial direct effects on the States, on the relationship between the national government and the States, or on distribution of power and responsibilities among the various levels of government. Therefore, under Executive Order 13132, we determine that this regulation does not have sufficient Federalism implications to warrant the preparation of a Federalism Assessment.

Regulatory Flexibility Act

The Director of the Bureau of Prisons, under the Regulatory Flexibility Act (5 U.S.C. 605(b)), reviewed this regulation and by approving it certifies that it will not have a significant economic impact upon a substantial number of small entities for the following reasons: This regulation pertains to the correctional management of offenders and immigration detainees committed to the custody of the Attorney General or the Director of the Bureau of Prisons, and its economic impact is limited to the Bureau's appropriated funds.

Unfunded Mandates Reform Act of 1995

This regulation will not result in the expenditure by State, local and tribal governments, in the aggregate, or by the private sector, of $100,000,000 or more in any one year, and it will not significantly or uniquely affect small governments. Therefore, no actions were deemed necessary under the provisions of the Unfunded Mandates Reform Act of 1995.

Small Business Regulatory Enforcement Fairness Act of 1996

This regulation is not a major rule as defined by Section 804 of the Small Business Regulatory Enforcement Fairness Act of 1996. This regulation will not result in an annual effect on the economy of $100,000,000 or more; a major increase in costs or prices; or significant adverse effects on competition, employment, investment, productivity, innovation, or on the ability of United States-based companies to compete with foreign-based companies in domestic and export markets.

List of Subjects in 28 CFR Part 548

Prisoners.

Harley G. Lappin,

Director, Bureau of Prisons.

Under rulemaking authority vested in the Attorney General in 5 U.S.C. 301; 28 U.S.C. 509, 510 and delegated to the Director, Bureau of Prisons in 28 CFR

0.96, we amend 28 CFR part 548 as follows.

Subchapter C—Institutional Management

PART 548—RELIGIOUS PROGRAMS

1. The authority citation for 28 CFR part 548 continues to read as follows:

Authority: 5 U.S.C. 301; 18 U.S.C. 3621, 3622, 3624, 4001, 4042, 4081, 4082 (Repealed in part as to offenses committed on or after November 1, 1987), 5006–5024 (Repealed October 12, 1984 as to offenses committed after that date), 5039; 28 U.S.C. 509, 510; 42 U.S.C. 1996; 28 CFR 0.95–0.99.

2. Add a new § 548.21 to read as follows:

§ 548.21 Chapel library materials.

(a) The Bureau maintains chapel library materials for inmates to pursue religious beliefs and practices while in Bureau custody consistent with ensuring that such materials do not jeopardize the safety, security, or orderly operation of Bureau facilities, or protection of the public.

(b) Material may be excluded from the chapel library if it is determined that such material could incite, promote, or otherwise suggest the commission of violence or criminal activity.

(c) For purposes of this subpart, inciting, promoting, or otherwise suggesting the commission of violence or criminal activity may include, but is not limited to:

(1) Advocating or fostering violence, vengeance, or hatred toward particular religious, racial, or ethnic groups; or

(2) Urging the overthrow or destruction of the United States.

[FR Doc. E9–550 Filed 1–15–09; 8:45 am]

BILLING CODE 4410–05–P

DEPARTMENT OF LABOR

Mine Safety and Health Adminisration

30 CFR Part 74

RIN 1219–AB61

Coal Mine Dust Personal Monitors

AGENCY: Mine Safety and Health Administration (MSHA), Labor.

ACTION: Proposed rule and close of comment period.

SUMMARY: This proposed rule would revise requirements that the Mine Safety and Health Administration (MSHA) and the National Institute for Occupational Safety and Health (NIOSH) apply to approve sampling devices that monitor miner exposure to respirable coal mine dust. The proposal would establish criteria for approval of a new type of technology, the ''continuous personal dust monitor,'' which would be worn by the miner and would report exposure to dust levels continuously during the shift. In addition, the proposal would update application requirements for the existing ''coal mine dust personal sampler unit'' to reflect improvements in this sampler over the past 15 years. This rulemaking is limited to approval requirements and does not address requirements concerning how sampling devices must be used to determine compliance, *e.g.*, who and when to sample. Those requirements are addressed in existing 30 CFR parts 70, 71, and 90.

DATES: MSHA and NIOSH invite comments on this proposed rule from interested parties. All comments must be received by midnight Eastern Standard Time on March 17, 2009.

ADDRESSES: Comments must clearly be identified with ''RIN 1219–AB61'' and may be submitted to MSHA by any of the following methods:

(1) *Federal e-Rulemaking Portal: http://www.regulations.gov.* Follow the instructions for submitting comments.

(2) *Electronic mail: zzMSHA-Comments@dol.gov.* Include ''RIN 1219–AB61'' in the subject line of the message.

(3) *Facsimile:* (202) 693–9441. Include ''RIN 1219–AB61'' in the subject line of the message.

(4) *Regular Mail:* MSHA, Office of Standards, Regulations, and Variances, 1100 Wilson Blvd., Room 2350, Arlington, Virginia 22209–3939.

(5) *Hand Delivery or Courier:* MSHA, Office of Standards, Regulations, and Variances, 1100 Wilson Blvd., Room 2350, Arlington, Virginia 22209–3939. Sign in at the receptionist's desk on the 21st floor.

Comments can be accessed electronically at *http://www.msha.gov* under the ''*Rules and Regs*'' link. MSHA will post all comments on the Internet without change, including any personal information provided. Comments may also be reviewed at the Office of Standards, Regulations, and Variances, 1100 Wilson Blvd., Room 2350, Arlington, Virginia. Sign in at the receptionist's desk on the 21st floor.

MSHA maintains a list that enables subscribers to receive e-mail notification when rulemaking documents are published in the **Federal Register**. To subscribe to the list, go to *http://www.msha.gov/subscriptions/subscribe.aspx.*

Information Collection Requirements: Comments concerning the information collection requirements of this proposed rule must be clearly identified with ''RIN 1219–AB61'' and sent to both the Office of Management and Budget (OMB) and MSHA. Comments to OMB may be sent by mail addressed to the Office of Information and Regulatory Affairs, Office of Management and Budget, New Executive Office Building, 725 17th Street, NW., Washington, DC 20503, Attn: Desk Officer for MSHA. Comments to MSHA may be transmitted either electronically to *zzMSHA-Comments@dol.gov,* by facsimile to (202) 693–9441, or by regular mail, hand delivery, or courier to MSHA, Office of Standards, Regulations, and Variances, 1100 Wilson Blvd., Room 2350, Arlington, Virginia 22209–3939.

FOR FURTHER INFORMATION CONTACT: Patricia W. Silvey, Director, Office of Standards, Regulations, and Variances, MSHA, at *silvey.patricia@dol.gov* (e-mail), (202) 693–9440 (voice), or (202) 693–9441 (facsimile).

SUPPLEMENTARY INFORMATION: The outline of this proposal is as follows:

I. Background
  A. Introduction
  B. Need for Rulemaking
  C. Public Hearings
II. Summary of Proposed Rule
III. Section-by-Section Analysis
  A. Section 74.1 Purpose
  B. Section 74.2 Definitions
  C. Section 74.3 Sampler unit
  D. Section 74.4 Specifications of sampler unit
  E. Section 74.5 Tests of coal mine dust personal sampler units
  F. Section 74.6 Quality control
  G. Section 74.7 Design and construction requirements
  H. Section 74.8 Measurement, accuracy, and reliability requirements
  I. Section 74.9 Quality assurance
  J. Section 74.10 Operating and maintenance instructions
  K. Section 74.11 Tests of the Continuous Personal Dust Monitor
  L. Section 74.12 Conduct of tests; demonstrations
  M. Section 74.13 Applications
  N. Section 74.14 Certificate of approval
  O. Section 74.15 Approval labels
  P. Section 74.16 Material required for record
  Q. Section 74.17 Changes after certification
  R. Section 74.18 Withdrawal of certification
IV. Regulatory Economic Analysis
  A. Executive Order 12866
  B. Benefits
  C. Compliance Costs
  D. Economic and Technological Feasibility
V. Regulatory Flexibility Act and Small Business Regulatory Enforcement Fairness Act
VI. Paperwork Reduction Act of 1995
VII. Other Regulatory Considerations
  A. The Unfunded Mandates Reform Act of 1995
  B. The Treasury and General Government Appropriations Act of 1999: Assessment

of Federal Regulations and Policies on Families
C. Executive Order 12630: Government Actions and Interference With Constitutionally Protected Property Rights
D. Executive Order 12988: Civil Justice Reform
E. Executive Order 13045: Protection of Children From Environmental Health Risks and Safety Risks
F. Executive Order 13132: Federalism
G. Executive Order 13175: Consultation and Coordination With Indian Tribal Governments
H. Executive Order 13211: Actions Concerning Regulations That Significantly Affect Energy Supply, Distribution, or Use
I. Executive Order 13272: Proper Consideration of Small Entities in Agency Rulemaking

I. Background

A. Introduction

The Coal Mine Health and Safety Act of 1969, the predecessor to the Federal Mine Safety and Health Act of 1977, specified that the average concentration of respirable coal mine dust be measured by a device approved by the Secretary of Interior and the Secretary of Health Education and Welfare (Secretaries). In 1972, the Secretary of Interior promulgated 30 CFR part 74—Coal Mine Dust Personal Sampler Units. That rulemaking established the requirements for joint approval of the device by both Secretaries and specified that MSHA's role was to determine if the unit was intrinsically safe. NIOSH would determine if the unit met the requirements of part 74.[1]

Since 1970, coal mine operators and MSHA have used approved coal mine dust personal sampler units (CMDPSUs) to determine the concentration of respirable dust in coal mine atmospheres. These devices sample the mine atmosphere by drawing mine air through a filter cassette that collects respirable coal mine dust. At the end of a full shift or 8 hours, whichever time is less, the cassette is sent to MSHA for processing. Each cassette is precisely weighed under controlled conditions to determine the average concentration of respirable coal mine dust to which the miner was exposed.

In the 1990s, NIOSH began research and development to produce a prototype technology for a new type of personal dust monitor that could provide readings of dust levels in the mine immediately during the shift and at the end of the shift. This would eliminate the delay of obtaining an offsite laboratory analysis which requires days before the results are made available to the mine operator and MSHA. The promise of the new technology, which is referred to generically as a ''continuous personal dust monitor'' (CPDM), was that it would allow mine operators to identify and immediately respond to high dust exposures. Operators would evaluate causes of over exposures, implement solutions to reduce exposures, and adjust them as necessary.

In 2003, a private sector monitoring technology company, Rupprecht and Patashnick Co., Inc., now Thermo Fisher Scientific, developed an initial prototype CPDM under contract with NIOSH. The prototype incorporates a unique mechanical mass sensor system called Tapered Element Oscillating Microbalance (TEOM®). The TEOM mass sensor is made up of a hollow tapered tube, which is clamped at its base and free to oscillate at its narrow or free end on which the collection filter is mounted. Electronics positioned around the sensor cause the tube to oscillate (or resonate) at its natural frequency. When dust particles are deposited on the collection filter, the mass of the collection filter increases, causing the natural oscillating frequency of the tapered element to decrease. Because of the direct relationship between mass and frequency change, the amount of respirable dust deposited on the filter can be determined by measuring the frequency change. The concentration of respirable dust in the mine atmosphere is then determined by a computer internal to the monitor, which divides the mass of dust collected by the volume of mine air that passed through the system during the time period sampled. The result is reported on the monitor's digital display. The cumulative average dust concentration is calculated and reported continuously over the duration of the shift and at the end of the shift. The data are also retained by the computer for downloading onto any personal computer with a Microsoft Windows® operating system using accompanying software. The prototype also projects the end-of-shift average dust concentration continuously during the shift. These projections can serve as a warning system to mine operators, assisting them in recognizing exposure levels that, if not reduced, would result in full-shift exposures exceeding regulatory limits.[2]

In 2006, NIOSH, in collaboration with MSHA and stakeholders representing the mining industry and labor, completed extensive testing to evaluate the accuracy of the pre-commercial unit and its suitability for use in the coal mine in terms of ergonomics and durability. The testing verified that the device achieved with 95 percent confidence end-of-shift measurements within ±25 percent of reference measurements[3] taken in a variety of coal mines. The testing also demonstrated that the device was acceptable to miners from an ergonomics standpoint, and was sufficiently durable to withstand the conditions of transportation and use in the mines. Thus, the testing demonstrated to MSHA and NIOSH that it is technically feasible to introduce the CPDM as an innovative new measurement tool for the protection of coal miners.[4]

B. Need for Rulemaking

Existing 30 CFR part 74, ''Coal Mine Dust Personal Sampler Units,'' specifies procedures and requirements by which MSHA and NIOSH[5] jointly approve the design, construction, performance, and manufacturing quality of the CMDPSU. These regulatory requirements, which were issued in 1972, are design-specific and do not permit the approval of any monitoring device of a different design. The CMDPSU is currently the only personal dust monitor approved for use in coal mines to monitor miners' exposure to respirable coal mine dust.

As discussed above, NIOSH, in collaboration with a private technology firm, MSHA, and representatives of industry and labor, has developed and evaluated a prototype for a new type of personal monitoring device, the ''continuous personal dust

[1] In 1978, responsibility for mine safety and health was transferred from the Department of Interior to the Department of Labor. In 1980 the Department of Health Education and Welfare became the Department of Health and Human Services (HHS).

[2] For a more complete description of the technology, see: Volkwein, J.C., Vinson, R.P., S.J. Page, L.J. McWilliams, G.J. Joy, S.E. Mischler, and D.P. Tuchman. Laboratory and field performance of a continuously measuring personal respirable dust monitor. CDC RI 9669. September 2006. 47 pp. and Volkwein, J.C., R.P. Vinson, L.J. McWilliams, D.P. Tuchman, and S.E. Mischler, Performance of a New Personal Respirable Dust Monitor for Mine Use. CDC RI 9663. June 2004.

[3] Reference measurements were established using multiple gravimetric samplers in dust exposure chambers for laboratory testing and using CMDPSUs in a variety of coal mines for field testing.

[4] See: Volkwein, J.C., R.P. Vinson, S.J. Page, L.J. McWilliams, G.J. Joy, S.E. Mischler, and D.P. Tuchman. Laboratory and field performance of a continuously measuring personal respirable dust monitor. CDC RI 9669. September 2006. 47 pp. and Volkwein, J.C., R.P. Vinson, L.J. McWilliams, D.P. Tuchman, and S.E. Mischler. Performance of a New Personal Respirable Dust Monitor for Mine Use. CDC RI 9663. June 2004.

[5] MSHA's role is to approve the ''intrinsic safety'' of the device, which assures that the device could be operated safely in the potentially explosive atmosphere of an underground coal mine.

monitor''(CPDM). The unit is capable of continuously monitoring and immediately displaying concentrations of respirable coal mine dust during the shift and also provides the end-of-shift summary measurements.

MSHA and NIOSH recognize that the ability to measure in real time the amount of respirable coal mine dust to which a miner is exposed offers the best solution for protecting miners from occupational lung disease. Knowing the actual respirable dust level and being able to project the end-of-shift dust exposure continuously during the shift will enable mine operators to take immediate action to prevent overexposure. This new technology can be a critical element in the strategy used by mine operators and MSHA to control respirable dust exposure.

The 1995 Advisory Committee on the Elimination of Pneumoconiosis Among Coal Mine Workers, which was established by the Secretary of Labor to make recommendations for improving the program to control respirable coal mine dust, also supported the use of continuous monitoring devices. That committee, which included representatives from the mining industry, the United Mine Workers of America and technical experts with no economic interests in mining, unanimously concluded that continuous monitors have the potential to improve monitoring of the work environment significantly and to contribute to the effective control of exposure.

However, existing MSHA standards and procedures for operator and agency monitoring of respirable coal mine dust specify that sampling must be conducted with an approved sampling device. The new CPDM technology cannot be approved under the existing part 74 requirements. MSHA and NIOSH are proposing to revise part 74 to accommodate this new technology.

While the proposed requirements under part 74 would allow the Secretaries to approve new types of sampling devices, existing standards under 30 CFR parts 70, 71 and 90 would need to be revised prior to using any new monitoring technology in coal mines for compliance purposes. Compliance issues are not within the scope of this rulemaking.

The proposed part 74 addresses performance-based and other requirements by which MSHA and NIOSH would approve CPDM devices for use in coal mines. The performance-based approach would allow for continued innovation in CPDM designs, which would accommodate improvements or alternative designs in the technology to be introduced in the future.

MSHA and NIOSH are also proposing in this rulemaking to revise the existing requirements in part 74 applicable to the approval of CMDPSUs. This proposed revision reflects improvements incorporated voluntarily by the manufacturer into the sampler design since the mid-1990s.

C. Public Hearings

MSHA and NIOSH will hold two hearings to provide the public with an opportunity to present oral statements, written comments, and other data on this rulemaking. One of the hearings will be held in the eastern part of the United States and the other will be held in the west. The hearings will be announced in a separate **Federal Register** notice. As indicated above, the nature of this rulemaking involves establishing performance-based approval requirements for manufacturers of monitoring devices. MSHA and NIOSH anticipate that two hearings will allow for full public input to the proposed rule.

II. Summary of Proposed Rule

This proposed rule would revise requirements for the approval of personal dust monitoring devices in 30 CFR part 74, currently titled ''Coal Mine Dust Personal Sampler Units,'' and would retitle the part ''Coal Mine Dust Personal Monitors.'' This rulemaking would establish performance-based and other requirements for approval of the new CPDMs. The requirements would facilitate innovation among direct-reading device manufacturers for the continued improvement of this technology.

The proposal also updates the existing design-based requirements for CMDPSUs. It is not the intent of this rulemaking to require changes in the current technology of CMDPSUs, although MSHA and NIOSH invite the public to comment on any aspect of this rulemaking.

Part 74 would be renumbered in this rulemaking as follows:

Subpart A—Introduction—Purpose and definitions.

Subpart B—Requirements for Coal Mine Dust Personal Sampler Unit—specifications for existing technology.

Subpart C—Requirements for Continuous Personal Dust Monitors—specifications for new technology.

Subpart D—General Requirements for All Devices—administrative provisions applicable to both the CMDPSU and CPDM.

III. Section-by-Section Analysis

The section-by-section analysis below describes and explains the proposed provisions of part 74. The proposed regulatory text is provided in the last section of this notice.

Subpart A—Introduction would be a new section which would cover the purpose and definitions.

A. Section 74.1 Purpose

Proposed § 74.1 describes the purpose of the rule and would be essentially unchanged from the existing provision. The scope has been expanded to include both CPDMSU and CPDM technology.

B. Section 74.2 Definitions

Proposed § 74.2 would be a new section to define key terms in the proposal.

Proposed paragraphs (a) and (b) would define the concepts of accuracy and bias as they apply to measurement devices such as the CPDM. They are key performance parameters for testing and approving of the CPDM.

Proposed paragraphs (c) and (d) would define the two types of sampling devices covered by this proposal, the CMDPSU and the CPDM. The definitions are included to distinguish between the two types of dust monitoring technology.

Proposed paragraph (e) would define the International Organization for Standardization (ISO), a voluntary consensus standards-setting organization. An ISO standard is relied on in this proposal (see § 74.9).

Proposed paragraph (f) would define the concept of precision as it applies to the CPDM. Precision is the third key performance parameter for the testing and approval of CPDMs.

Subpart B contains the requirements that apply to the CMDPSU.

C. Section 74.3 Sampler Unit

Proposed § 74.3 would renumber existing § 74.2, which specifies the major components of a CMDPSU and would be substantially unchanged from the existing provisions.

D. Section 74.4 Specifications of Sampler Unit

Proposed § 74.4 would renumber existing § 74.3 and update the requirements of the existing provision to reflect the sampling technology approved for use in coal mines today.

Existing paragraph (a) would update the existing design requirements for the pump unit of the CMPDSU.

Proposed paragraph (a)(1) would update pump dimensions to reflect the smaller size of the device used today: 4 inches (10 centimeters) in height; 4

inches (10 centimeters) in width; and 2 inches (5 centimeters) in thickness. The existing specifications allow for dimensions of up to 8 inches (20 centimeters), 6 inches (15 centimeters), and 4 inches (10 centimeters), respectively.

Proposed paragraph (a)(2), which specifies the maximum pump weight, would be updated to reflect the reduction in the weight of these units, from 4 pounds (1.814 kilograms) to 20 ounces (567 grams).

Proposed paragraph (a)(3), which specifies the characteristics of the construction of the pump case and pump components, would be updated to add the requirement that they must protect against radio frequency interference and electromagnetic interference. This improvement, implemented in the 1990s, is necessary to prevent potential instrument error or malfunction due to exposure to electromagnetic fields and various radio frequency ranges and signal strengths encountered in coal mines from power stations, electric motors and remote control transmitters. The proposal would retain the existing requirement that the case and components of the pump unit must be of durable construction and tight-fitting.

Proposed paragraphs (a)(4) and (a)(5) would be unchanged from the existing provisions. These paragraphs require that the pump exhaust into the pump case to maintain a slight positive pressure and the pump unit be equipped with an ON/OFF switch to protect against accidental operation during use.

Existing paragraph (a)(6), which specifies pump design characteristics for flow rate adjustment, would be revised to provide more flexibility in the design to avoid inadvertent changes in the flow rate. The existing specification requires the use of a flow rate adjusting ''tool'' to prevent inadvertent changes in the flow rate. This specific requirement would be deleted.

Proposed paragraph (a)(7), like the existing provision, would require that the power supply for the pump be a suitable battery located in the pump case or in a separate case which is attached by a permissible electrical connection.

Existing paragraph (a)(8), which concerns regulating the effect of pulsation on the flow rate of the pump, would be revised to delete the reference to the expired date (July 1, 1974) in paragraph (ii).

Proposed paragraphs (9) and (10), like the existing provisions, would require that the pump unit be equipped with a belt clip and that a suitable connection be provided to allow the battery to be recharged without removing it from the pump case or battery case.

Existing paragraph (a)(11), which requires a visual indication of the flow rate and specifies the calibration of the flow rate indicator, would be updated to require that it be calibrated within ±5 percent at 2.2, 2.0, and 1.7 liters per minute, versus at 2.0, 1.8, and 1.6 liters per minute as required under the existing rule. The proposed higher flow rates better reflect the operating flow rate range specified in proposed paragraph (a)(12).

Proposed paragraph (a)(12), like the existing provision, would require that the pump operate within a range from 1.5 to 2.5 liters per minute and be adjustable over this range.

Existing paragraph (a)(13), which requires the flow rate to remain consistent or stable during sampling, would be revised to require that the consistency be sustained over at least a 10-hour period, versus an 8-hour period under the existing provision. This change reflects the operating performance of these devices today and the prevalence of 10-hour shifts in coal mining. The existing requirements for readjustment of the flow rate would be deleted since all units currently in use have constant flow pumps and do not require readjustment.

Proposed paragraph (a)(14) would be a new provision that would require a flow restriction indicator. This new requirement would reflect current technology and would be incorporated to prevent the shutdown of a pump and loss of a sample if the flow restriction is not corrected. This helps assure that the mine atmosphere is accurately sampled. The requirements in existing paragraph (a)(14), which address duration of operation of the pump unit, would be transferred to new proposed paragraph (a)(15).

Existing paragraph (a)(14) would be redesignated as paragraph (a)(15). This provision would specify the required maximum expected operating time that the pump with a fully charged battery pack must be capable of operating at specific flow rates and sampling device loading. This paragraph would be revised to reflect the extended and higher level of performance achieved by existing technology. This increased capacity is necessary to enable the sampling of work shifts longer than 8 hours, which are prevalent today. The existing resistance requirement for 8 hours of operation at a flow rate of 2 liters per minute would be increased from 4 inches (10 centimeters) of water to 25 inches (64 centimeters) of water, as measured at the inlet of the pump. The proposal adds a new provision that reflects existing technology by requiring the pump to operate for not less than 10 hours at a flow rate of 2.5 liters per minute against a resistance of 15 inches (38 centimeters) of water.

Proposed paragraph (a)(16) is a new provision which would require the pump unit to be equipped with a low battery indicator. This provision reflects existing technology and is an important feature for ensuring the successful sampling of the mine atmosphere. Failure of the battery during sampling results in invalidation of the sample and the inability to determine the respirable coal mine dust concentration measured by the CMDPSU.

Proposed paragraph (a)(17) is a new provision which would require the pump unit to be equipped with an elapsed time indicator displaying the actual pump run time after the pump is shut down due to a flow restriction or low battery power, or at the end of the sampling shift. This proposal reflects existing technology and is necessary to determine if sampling was conducted for the required duration, which is essential for the accurate measurement of the respirable coal mine dust concentration that occurred during the work shift.

Proposed paragraph (b) addresses requirements for the sampling head assembly of the CMDPSU.

Proposed paragraphs (b)(1) and (b)(2)(i), retain the requirements of the existing provisions for the cyclone and the filter (with a minor wording change).

Proposed paragraph (b)(2)(ii), which specifies characteristics of the capsule enclosing the filter, would be revised to require that the capsule prevent visual inspection of the filter surface or filter loading. This reflects existing technology and is intended to safeguard the accuracy, integrity, and validity of the sample.

Existing paragraph (b)(2)(iii), which specifies characteristics of the cassette enclosing the capsule, would be revised to add the requirement that the cassette be designed to prevent intentional or inadvertent alteration of the dust deposited on the filter. The proposal would also add a requirement that the capsule covers be designed to prevent reversal of the air flow through the capsule or other means of removing dust collected on the filter. These provisions would reflect existing technology and are intended to safeguard the accuracy, integrity, and validity of the sample.

Proposed paragraphs (b)(3) and (b)(4) are the same as the existing provisions. Proposed paragraph (b)(3) relates to the connections between the cyclone vortex

finder and the capsule and between the capsule and hose. Proposed paragraph (b)(4) requires that the clamping and positioning of the cyclone-cassette assembly be firmly in contact, airtight and be attached firmly to a backing plate.

Existing paragraph (b)(5), which specifies the characteristics of the hose connecting the sampler pump and the filter assembly, would be revised to require that the hose be clear plastic. This proposed revision would reflect existing technology and allow the examination of the external tubing to assure that it is clean and free of leaks, as accumulations or leaks could affect the accuracy of the sampling results.

Proposed paragraph (c) would address requirements for the battery charger of the CMDPSU.

Existing paragraph (c)(1), which specifies the voltage and frequency requirements for the battery charger, would be updated to reflect currently used power supply voltage of 110 (VAC) (nominal), versus 117 volt in the existing standard.

Proposed paragraphs (c)(2) and (c)(3) are identical to existing (c)(2) and (c)(3), which require that the battery charger be provided with a cord and polarized connector and that it be fused and have a grounded power plug.

Existing paragraph (c)(4), which specifies the recharging rate of the battery charger, would be revised to reflect current technology, which fully recharges the battery in the pump unit within 16 hours.

E. Section 74.5 Tests of Coal Mine Dust Personal Sampler Units

Proposed § 74.5 renumbers existing § 74.4 and would provide authority for NIOSH and MSHA testing to evaluate whether the CMDPSU meets the requirements of this rule. This section has not been substantively changed.

F. Section 74.6 Quality Control

Proposed § 74.6 is derived from existing § 74.6(d) regarding applications. The proposal makes only clarifying changes by referencing proposed § 74.13 (filing applications).

Subpart C—Requirements for Continuous Personal Dust Monitors (CPDMs)

G. Section 74.7 Design and Construction Requirements

Proposed § 74.7 would provide design and construction requirements for the CPDM. The requirements would be performance oriented to the extent possible to allow manufacturers flexibility for continued innovation in this new technology. Design-specific requirements are proposed when necessary and appropriate for assuring miner safety or accommodating mining conditions.

Proposed paragraph (a) would require that the CPDM be designed and constructed to allow miners to work safely and be suited to work requirements and working conditions of coal mining.

Proposed paragraph (b) addresses ergonomic design and would require that, prior to filing an application under proposed § 74.13, the applicant must develop a testing protocol to determine if coal miners can wear the CPDM safely and without discomfort or impairment in the performance of their work duties throughout a full work shift. The protocol would be required to include provisions for testing in one or more active mines under routine operating conditions. NIOSH would approve the protocol prior to testing and would review the written results as a component of the application for approval. NIOSH would advise and assist the applicant in developing an adequate testing protocol and arranging for adequate and competent testing resources, including but not limited to identifying testing experts and facilitating the cooperation of coal operators and miners. NIOSH would reserve the authority to waive the requirement for the applicant to conduct such testing when it is apparent ''that the device can be worn safely, without discomfort, and without impairing a coal miner in the performance of duties throughout a full work shift.''

Proposed paragraph (c) would require that the weight of a CPDM add no more than 2 kg to the total weight carried by the miner. However, a CPDM combined with other functions, such as communications or illumination, could weigh more than 2 kg if offset by other means. The result should be that the total extra weight is no more than 2 kg more than the weight normally carried by miners without the CPDMs. The 2-kg limit is proposed based on the professional judgment of MSHA and NIOSH field staff that the added load to miners needs to be minimized, considering that the safety gear and equipment currently worn and carried by underground coal miners can weigh up to approximately 16 kg. The proposed limit accommodates the weight of the prototype CPDM, which in NIOSH testing was worn and used by miners for full shifts and proved to be acceptable. The prototype weighed approximately 3 kg, but served to power the cap lamp as well, so that a separate battery was not required for the cap lamp. In combination, the prototype with its dual-use battery increased the personal equipment load of the miners by less than 2 kg.

Proposed paragraph (d) would require that the CPDM provide accurate measurements of respirable coal mine dust concentrations within the range of 10% to 2 times the permissible exposure limit (PEL) for respirable coal mine dust (currently 2.0 mg/m^3 when quartz content does not exceed 5%) for an end-of-shift average measurement, and provide a reliable indication when the concentration exceeds 2 times the PEL.

Proposed paragraph (e) would require that the CPDM operate reliably and accurately within the full range of environmental conditions encountered in coal mines. It would require that the CPDM operate reliably and accurately at any ambient temperature and varying temperatures ranging from minus 30 to plus 40 degrees centigrade; at any atmospheric pressure from 700 to 1000 millibars; at any ambient humidity from 10 to 100 percent relative humidity; and while exposed to water mists generated for dust suppression and while monitoring atmospheres including such water mists. These proposed parameters, in addition to those in proposed paragraphs (f) and (g) of this section, would address the full range of environmental conditions found in coal mines. MSHA and NIOSH specifically solicit comments on these parameters, as well as any others that might be appropriate.

Proposed paragraph (f) would require that the CPDM meet standards for the control of and protection from electromagnetic interference established by the American National Standards Institute (ANSI), the Federal Communications Commission (FCC), and the International Electrotechnical Commission (IEC). The FCC is an independent federal agency that regulates radiofrequency emitting devices. ANSI and IEC are voluntary standards-setting organizations, the former covering a wide array of technical and management fields and the latter specializing in electrotechnology. The use of these standards would address the potential for interference associated with the increasing use of radiofrequency controls for mining machinery and mine communication systems.

Proposed paragraph (g) would require that the CPDM be designed and constructed to remain intrinsically safe and accurate after undergoing vibration and shock tests representative of conditions of use in the mine. In testing for vibration, NIOSH proposes to use Military Standard 810F, 514.5. This test

would measure the degree of vibration expected while the device is worn by miners on and operating mining equipment and during transport in and out of the mine. The shock test that NIOSH would apply would involve three 3-foot drops onto a bare concrete surface (one drop testing each axis of the device). This test would represent the occasional drops and knocking of the device expected during use of the device by miners. NIOSH would conduct the testing regime on test units prior to further testing by the applicant under § 74.8 and intrinsic safety testing by MSHA under § 74.11(d).

Proposed paragraphs (h)(1) and (2) would require adequate legibility or audibility of monitoring results, computer (*i.e.*, digital) recording of results in a form compatible with widely available computer technology, and reporting of results as cumulative mass concentration in units of mass per volume of air (mg/m^3). The proposed visibility requirement for a minimum digital character height of 6 millimeters is based on testing during CPDM prototype development. All other proposed requirements in this provision allow flexibility for new innovative designs that would provide timely, reliable, and appropriately quantified information.

Proposed paragraph (i) would require that the power source for the CPDM have sufficient capacity to enable continuous sampling for 12 hours in a coal mine dust atmosphere of 2 times the PEL. This requirement would provide reasonable assurance that the power supply would be sufficient to enable accurate measurement of respirable dust concentrations for 12 hour work shifts, which are the longest current work shifts in U.S. coal mines. If the dust concentrations in a mine exceeded 4 mg/m^3 continuously for 12 hours, a power supply meeting this proposed standard might not be sufficient to sustain monitoring for the complete shift, since a higher dust concentration would place higher power demands on certain types of filtering technology. Nevertheless, this proposed standard would be sufficient to assure that the CPDM would have the power capacity to measure high dust concentrations during the shift, and to cumulatively document that they substantially exceeded the PEL for the full shift. These are the essential performance considerations for the CPDM for continuous and end-of-shift monitoring.

Proposed paragraph (i) also would require that a CPDM that uses a rechargeable battery must be recharged using the standard power supplies in mines (110 VAC).

Proposed paragraph (j) would require that if a CPDM uses a pump to sample the atmosphere, it must perform with a flow stability within ± five percent of the calibrated flow for a continuous duration of 12 hours.[6] This requirement is integral to achieving representative, accurate measurements of respirable coal mine dust concentrations. The paragraph would also require that the applicant specify in the calibration instructions for the device the flow calibration maintenance interval required to achieve this level of flow stability.

Proposed paragraph (k) would require that a CPDM using a rechargeable battery have a feature to indicate to the user that the unit is adequately recharged to provide accurate measurements for an entire shift of 12 hours. This feature is necessary to avoid monitoring failures due to power deficiency. The requirement of ''* * * under normal conditions of use'' is included to account for the possibility that exceptionally high dust concentrations, exceeding 4 mg/m^3, which normally should not occur, might deplete the battery power before the end of the shift. CPDM battery power does not have to be sufficient to continue accurate monitoring under such excessive exposure conditions for an entire 12-hour shift, since the non-compliant exposure would be measured and documented within the initial portion of the shift during which the device would operate with adequate battery power.

Proposed paragraph (l) sets forth requirements for CPDMs that share components with other personal equipment carried by an underground miner, such as cap lamps.

Proposed paragraph (l)(1) would require that the applicant obtain any necessary approvals required for the non-CPDM equipment prior to receiving final certification of the CPDM from NIOSH. This provision will enable NIOSH to assure that all approvals for devices not approved by NIOSH are obtained, as appropriate.

Proposed paragraph (l)(2) would require that the CPDM operate effectively with the integrated function or functions. This provision would assure that the CPDM is not compromised by integration of functions and provide reasonable assurance that the integrated non-CPDM functions operate as intended.

[6] NIOSH Manual of Analytic Methods, Method 0600, Issue 3, Fourth Edition, January 15, 1998.

Proposed paragraph (m) would specify performance requirements that would help assure that CPDMs are designed to prevent intentional tampering and limit inadvertent altering of monitoring results. It would require that the CPDM have a safeguard or indicator which either prevents altering the measuring or reporting function of the device or indicates if these functions have been altered.

This proposed provision is intended to direct manufacturers to design tampering safeguards and indicators that address foreseeable actions by users. In addition, the provision would allow NIOSH to require, to the extent feasible, changes in the design of an already approved device, following the discovery of tampering methods or inadvertent actions that can alter monitoring results.

Proposed paragraph (n) would require that the CPDM be designed to assure it can be properly cleaned and maintained to perform accurately and reliably for the duration of its service life. The infiltration and accumulation of dust and moisture in components might adversely affect the operability and monitoring accuracy of a CPDM.

H. Section 74.8 Measurement, Accuracy, and Reliability Requirements

Proposed § 74.8 is new and would establish the performance requirements for CPDMs. These proposed requirements reflect current evaluation methods regarding the assessment of direct reading monitors. These methods have been summarized and issued as general guidelines by NIOSH (Components for the Evaluation of Direct-Reading Monitors for Gases and Vapors).[7] The proposed requirements also reflect the state-of-the-art technology of the CPDM prototype. Accordingly, this proposed rulemaking establishes a science-based, feasible baseline for the performance of this new CPDM technology. Upon request, NIOSH will provide a report on the performance of the prototype CPDMs, which are partially summarized in several peer-reviewed journal articles.[8]

Proposed paragraph (a) would require that the CPDM be capable of measuring

[7] Kennedy, E. R., T.J. Fischbach, R. Song, P.M. Eller, and S.A. Shulman, 1995. Guidelines for air sampling and analytical method development and evaluation, DHHS (NIOSH) Publication No. 95–117.

[8] Volkwein, J.C., R.P. Vinson, S.J. Page, L.J. McWilliams, G.J. Joy, S.E. Mischler and D.P. Tuchman. Laboratory and field performance of a continuously measuring personal respirable dust monitor. CDC RI 9669. September 2006. 47 pp. and Volkwein, J.C., R.P. Vinson, L.J. McWilliams, D.P. Tuchman, and S.E. Mischler. Performance of a New Personal Respirable Dust Monitor for Mine Use. CDC RI 9663. June 2004.

respirable dust within the personal breathing zone of the miner whose exposure is being monitored. The breathing zone is generally considered to be the area surrounding the worker's nose and mouth. This zone is pictured by drawing a sphere with a 10-inch radius which is centered on the nose. Current industrial hygiene principles accept breathing zone samples as most representative of the atmosphere to which workers are exposed.[9] The proposed rule provides a reasonably specific definition of the breathing zone to guide applicants.

Proposed paragraph (b) would provide requirements for the measurement accuracy of the CPDM.

Proposed paragraph (b)(1) would require for full-shift measurements of 8 hours or more, a 95 percent confidence that the recorded measurements are within ±25 percent of the true dust concentration, as determined by CMDPSU reference measurements, over a concentration range of 10% to 2 times the PEL. The specific quantified degree of accuracy proposed is based on the current state of the technology of direct reading monitors and on the need for reasonable accuracy in industrial hygiene assessments to assure worker protection. NIOSH has demonstrated the feasibility of this accuracy requirement through testing of the CPDM prototype.[10]

The proposed measurement range over which the CPDM must be accurate is also based on the current CPDM technology, as represented by the pre-commercial unit. This technology requires a minimum quantity of filter loading on the microbalance filter before the CPDM can measure accurately, distinguishing actual exposure quantities from small measurement variations due to imperfections of the CPDM equipment. The lower bound assures that accuracy is maintained for situations where silica is present and the permitted levels of respirable dust are reduced. Similarly, there is an upper bound of loading, which is likely to exceed the specified 4.0 mg/m^3 level,[11] after which current CPDM technology may lose sensitivity as a result of the heavily loaded filter on the microbalance. Nonetheless, the proposed standard would assure that the range of average, full-shift dust concentrations over which the CPDM would perform accurately would be adequate to quantify full shift exposures that range from exceptionally low to exceptionally high, allowing for identification of overexposures.

For intra-shift measurements of less than 8 hours, proposed paragraph (b)(2) would require a 95 percent confidence that the recorded measurements are within ±25 percent of the true dust concentration, as determined by CMDPSU reference measurements, over the dust concentration of 10% to 2 times the PEL for an 8-hour period. The proposal includes a formula for calculating the equivalent dust concentration range for assessing the accuracy of intra-shift measurements.

Proposed paragraph (c) would require the CPDM to meet the accuracy requirements regardless of the variation in density, composition, size distribution of respirable coal mine dust particles, or presence of spray mist found in U.S. coal mines. Some monitoring devices, such as light scattering detectors, use technologies that have potential for monitoring aerosol dust concentrations. These devices currently lack the ability to distinguish differences in density and composition of coal mine dust particles and other aerosols in the mine, or to accommodate variation in the coal mine dust particle distribution. To be effective, the CPDM must produce accurate measurements for any coal mine atmosphere.

Proposed paragraph (d) would establish a requirement for the CPDM to monitor with sufficient precision, meaning the degree to which it is able to closely replicate its measurement result, when monitoring identical dust concentrations. The proposed precision requirement is a relative standard deviation of less than 0.1275 without bias for multiple measurements. The proposed precision requirement will enable MSHA and mine operators to monitor changes in dust concentrations with reasonable confidence.

Proposed paragraph (e) would require the bias of CPDM measurements to be limited such that the uncorrectable discrepancy between the mean of the distribution of measurements and the true dust concentration being measured during testing shall be no greater than 10 percent. The proposal requires that measurement bias be constant over the range of dust concentration levels tested, between 10% and 2 times the PEL, for an 8-hour sampling period. The proposed bias requirement is sufficient to assure that the CPDM does not consistently either overestimate or underestimate respirable coal mine dust concentrations to a substantial degree. This provides further assurance of the accuracy of the CPDM with respect to multiple measurements and would also provide useful information to MSHA in support of compliance determinations and actions.

Proposed paragraph (f) would require that applicants use the NIOSH testing procedure ''Continuous Personal Dust Monitor Testing Procedures'' to evaluate the accuracy (including reliability, precision, and bias) of a CPDM. The procedure is available at the NIOSH Web site: *http://www.cdc.gov/niosh/mining.* The protocol would assure that all CPDMs are evaluated consistently. NIOSH will provide assistance to applicants, as necessary, to make the arrangement of such testing feasible.

I. Section 74.9 Quality Assurance

Proposed § 74.9 is new and would establish quality assurance requirements for CPDM manufacturers.

Proposed paragraph (a) would require that the applicant establish and maintain a quality control system that assures devices produced under the applicant's certificate of approval meet the specifications to which they are certified under this part and are reliable, safe, effective, and otherwise fit for their intended use. The proposed quality control system must be compliant with ISO Q9001–2000 standard established by the ISO.[12] The ISO standard is incorporated by reference. This consensus standard for quality management is in widespread use in U.S. and international manufacturing and service industries. It requires a comprehensive quality management system, which is essential for the manufacture of sophisticated technical equipment used in worker safety and health.

Proposed paragraph (a) would also require the applicant to submit a copy of the most recent registration under ISO Q9001–2000 to NIOSH, together with the application and, subsequent to

[9] Guffy, S.E., M.E. Flanagan, G. VanBelle. Air Sampling at the chest and ear as representative of the breathing zone. AIHAJ, 62:416–427, 2001, show that ear locations are preferred and that dust sources relative to sample position are important. A NIOSH study on miners shows that the chest and cap lamp positions are representative of exposures at the miner's nose (Vinson, R.P. and J.C. Volkwein, Determining the Spatial Variability of Personal Sampler Inlet Locations (in press) JOEH, 2007).

[10] Volkwein, J.C., R.P. Vinson, L.J. McWilliams, D.P. Tuchman, and S.E. Mischler. Performance of a New Personal Respirable Dust Monitor for Mine Use. CDC RI 9663. June 2004.

[11] NIOSH testing of the CPDM prototype used 4.0 mg/m^3 dust concentrations as the upper limit in challenging the device for accuracy. NIOSH did not conduct testing to identify the upper bound at which the accuracy of the prototype would be degraded below the testing standard, although the ultimate occurrence of such degradation is predictable based on engineering principles.

[12] ISO Q9001:2000 is the International Standard: *Quality management systems—Requirements, 3rd edition,* approved on December 15, 2000 and available from the International Organization for Standardization and the American National Standards Institute.

an approval, upon request. Registration under any updated version of ISO Q9001–2000 would be considered evidence of compliance with the ISO Q9001–2000 standard. Registration under the ISO quality management standard would represent evidence that the applicant has established a sound quality assurance program, and allow for the use of existing and widely available independent auditing services.

Proposed paragraph (b) would require applicants or approval holders to allow NIOSH to conduct quality management audits when requested or in response to quality-related complaints. NIOSH has similar authority under its respirator certification program (42 CFR part 84), which has been used to assure product quality in the respirator market. This authority is essential in the event of substantial quality management problems in the manufacture of CPDMs.

Proposed paragraph (c) would require a manufacturer to remedy a quality management deficiency identified by NIOSH or an independent audit within a reasonable time as determined by NIOSH. Refusal by the manufacturer would potentially result in the disapproval of a pending application or revocation of an approval until such time as NIOSH has determined that the deficiency is remedied. NIOSH has similar authority under its respirator certification program, although NIOSH has rarely had to employ it.

J. Section 74.10 Operating and Maintenance Instructions

Proposed § 74.10(a) is new and would require the manufacturer to include operating and maintenance instructions with each new CPDM unit sold.

Proposed paragraph (b) would require the manufacturer to submit the instructions to NIOSH with the application for approval. It would also require that revised instructions be submitted if any substantive changes are made to the unit or the approved instructions after initial approval. Adequate instructions must be provided to facilitate effective use of sophisticated monitoring equipment. NIOSH review and approval of instructions would serve an important final quality control function for the manufacturer and assure that instructions are clearly written and easily understood. NIOSH has similar authority under its respirator certification program (42 CFR part 84).

K. Section 74.11 Tests of the Continuous Personal Dust Monitor

This section is new and would establish testing requirements and services for the evaluation of CPDMs.

Proposed paragraph (a) would require the applicant to conduct all testing regarding design, construction, and measurement accuracy requirements specified in §§ 74.7–74.8 of this part, with the exception of durability testing under § 74.7(g). It would further require that the testing be performed by an independent testing entity approved by NIOSH. This requirement would reduce concerns about conflicts of interest and would provide reasonable assurance of the quality of the testing and the reliability of the results.

NIOSH considered the alternative of developing an in-house testing program for the evaluation of CPDMs. This alternative is not being proposed because NIOSH does not expect a substantial number of CPDM applications.

Proposed paragraph (b) would provide for NIOSH to assist the applicant in identifying appropriate testing services and in assuring that testing protocols used by the independent testing entity are adequate. Applicants would be required to submit testing protocols to NIOSH prior to testing. It is unlikely that a manufacturer would be familiar with testing resources capable of addressing every element of the proposed requirements. NIOSH would be able to provide the applicant with information on private and university laboratories available for testing. In addition, NIOSH review of testing protocols would minimize the possibility of inadequate testing, which might result in the applicant incurring unnecessary delay and costs.

Proposed paragraph (c) would require the applicant to arrange for the independent testing entity to report testing protocols and results directly to NIOSH. This direct reporting relationship between the testing entity and NIOSH would further establish the independence of the testing from the applicant.

Under proposed paragraph (d) MSHA would evaluate and determine the intrinsic safety of a CPDM submitted for approval. MSHA conducts all intrinsic safety testing for mining equipment used in underground coal mines. A CPDM that does not pass such testing would not be approved for use in U.S. coal mines.

Subpart D—General Requirements for All Devices

L. Section 74.12 Conduct of Tests; Demonstrations

Proposed § 74.12, concerning the conduct of tests, renumbers existing § 74.5 and would make clarifying changes to the existing provision. This section, which concerns the management of testing information prior to and after the issuance of a certificate of approval, would clarify that MSHA and NIOSH may reveal test protocols and results considered for approval of the device.

M. Section 74.13 Applications

Proposed § 74.13 would renumber existing § 74.6 and add requirements necessary for filing an application for CPDMs. The application requirements for CMDPSUs remain substantively unchanged.

Proposed paragraph (a) would require that a written application in duplicate be submitted to NIOSH and MSHA for approval of a CMDPSU (*i.e.*, a total of four applications). Also, 10 complete units must be submitted to NIOSH with the application and one pump must be sent to MSHA. This is the same as the existing requirement for the CMDPSU.

Proposed paragraph (b) would require the submission of an application in duplicate and 4 complete CPDM units, 3 to NIOSH and one to MSHA. The 4 units would allow MSHA to conduct intrinsic safety testing and NIOSH to evaluate compliance with the ''Design and Construction Requirements'' (See § 74.7), verify any testing results, evaluate the use and maintenance instructions, and address quality assurance matters.

Proposed paragraph (c) would require that drawings and specifications provided in the application identify the design, dimension, and materials of the CMDPSU or CPDM. This information is necessary for a complete evaluation of compliance with design and construction requirements proposed under this part.

N. Section 74.14 Certificate of Approval

Proposed § 74.14 renumbers existing § 74.7 and would specify procedures by which NIOSH and MSHA would approve or disapprove an application for either a CMDPSU or CPDM. Proposed § 74.14 is unchanged from the existing provision, except to expand the scope to include the CPDM.

O. Section 74.15 Approval Labels

Proposed § 74.15 renumbers existing § 74.8 and would specify labeling procedures, requirements, and related obligations of the applicant. Proposed § 74.15 is unchanged from the existing provision, except to expand the scope to include the CPDM.

P. Section 74.16 Material Required for Record

Proposed § 74.16 renumbers existing § 74.9 and would provide for adequate records on each application, the return of CMDPSU or CPDM test units to the applicant, and the delivery of a commercially produced unit to NIOSH. Proposed § 74.16 is unchanged from the existing provision, except to expand the scope to include the CPDM.

Q. Section 74.17 Changes After Certification

Proposed § 74.17 renumbers § 74.10 and would specify procedures by which the applicant could seek to change features of an approved CMDPSU or CPDM. This section requires the manufacturer to file an application to change any feature and to test the modified device if NIOSH determines that testing is required. Proposed § 74.17 is unchanged from the existing provision, except to expand the scope to include the CPDM.

R. Section 74.18 Withdrawal of Certification

Proposed § 74.18 renumbers § 74.11 and would authorize NIOSH or MSHA to revoke for cause any certification of approval for a CMDPSU or CPDM. Proposed § 74.18 is unchanged from the existing provision, except to expand the scope to include the CPDM.

IV. Regulatory Economic Analysis

A. Executive Order 12866

Under Executive Order (E.O.) 12866 (58 FR 51735), as amended by Executive Order 13258 (amending Executive Order 12866 on Regulatory Planning and Review (67 FR 9385), the Agency must determine whether a regulatory action is ''significant'' and subject to review by the Office of Management and Budget (OMB) and the requirements of the Executive Order. Under section 3(f), the order defines a ''significant regulatory action'' as an action that is likely to result in a rule (1) Having an annual effect on the economy of $100 million or more, or adversely and materially affecting a sector of the economy, productivity, competition, jobs, the environment, public health or safety, or state, local, or tribal governments or communities (also referred to as ''economically significant''); (2) creating serious inconsistency or otherwise interfering with an action taken or planned by another agency; (3) materially altering the budgetary impacts of entitlements, grants, user fees, or loan programs or the rights and obligations of recipients thereof; or (4) raising novel legal or policy issues arising out of legal mandates, the President's priorities, or the principles set forth in this Executive Order. MSHA has determined that the proposed rule would not have annual effect of $100 million or more on the economy and, therefore, it is not an economically ''significant regulatory action'' pursuant to section 3(f) of Executive Order 12866. MSHA, however, has concluded that the proposed rule is otherwise significant under Executive Order 12866 because it raises novel legal or policy issues.

This proposed rule would update existing requirements for the approval of a CMPDSU to reflect the current state of this technology. The current approval holder of this device has voluntarily incorporated these improved requirements into the device. The proposal would also provide procedures and requirements by which NIOSH and MSHA could approve a new monitoring technology, CPDM devices, for use in coal mines.

Providing requirements to allow the approval of a new monitoring technology, the CPDM, for use in coal mines, does not have any potential for adversely impacting the economy. No such device has been commercialized for the mining industry. This proposal does not establish compliance requirements. It addresses the approval of dust monitoring devices.

B. Benefits

Coal mine dust is produced when material is extracted from the coal seam by drilling, blasting, and cutting, and during loading and transporting of that material from the mine. Respirable coal mine dust consists of a mixture of very small particles of coal, silica, and other mineral and organic materials found in the mine environment that can be inhaled and deposited in the lungs. It presents a significant health hazard if not adequately controlled. Long-term exposure to excessive levels of respirable coal mine dust causes coal workers' pneumoconiosis (CWP), commonly known as ''black lung.'' Overexposure to respirable silica dust can lead to silicosis. These occupational lung diseases can devastate a miner's quality of life, create a heavy burden on the victim and the victim's family, and in some cases lead to premature death. While significant progress has been made over the years in reducing respirable dust levels, coal miners continue to be at risk of developing CWP and silicosis, including progressive massive fibrosis (PMF), the most disabling and potentially fatal form of CWP. While there is no cure for these disabling lung diseases, they are entirely preventable.

According to the U.S. Department of Labor's (DOL) Office of Workers' Compensation Programs, which administers the Black Lung benefits program to compensate victims of dust exposure in mines and certain eligible survivors of deceased miners, black lung benefits (monthly wage replacement and medical benefits) totaled $676 million in FY 2005.[13]

Under the Federal Coal Mine Health and Safety Act of 1969 (Pub. L. 91–173), the predecessor to the Federal Mine Safety and Health Act of 1977 (Pub. L. 95–164), the dust sampling technology used to measure miners' exposure to respirable coal mine dust has basically remained unchanged since 1970. The existing approved dust sampler used by coal mine operators and MSHA consists of a person-wearable battery-powered pump that draws mine air through a cyclone that separates respirable dust that can enter the inner lung and deposits it on a filter that is then weighed by MSHA. The dust concentration is calculated based on the volume of air sampled and the mass of dust collected. Usually, this procedure takes several days before mine operators and MSHA receive the results. By that time, the mining workplace has moved and conditions may have changed substantially. Under the existing sampling method, it may be difficult for a mine operator to identify conditions of high dust exposure as they occur, often preventing necessary and timely intervention to reduce the exposures.

CPDMs represent an innovative technology that provides real-time and continuous accurate measurement of respirable coal mine dust during a working shift. Continuous exposure readings enable mine management to be proactive and take immediate preventive action to avoid potentially excessive exposures. The devices can also be used as an engineering tool to permit the operator to rapidly evaluate the effectiveness of various dust control strategies.

MSHA and NIOSH recognize that the major benefits to be derived from real-time continuous monitoring will occur when monitoring devices with this new technology and strategies for their use are developed and implemented. However, before CPDMs can be introduced in coal mines, they must be approved for use by MSHA and NIOSH. The existing regulations limit approval to dust sampling devices of the current design and do not permit the Agencies

[13] U.S. DOL Employment Standards Administration, Office of Workers' Compensation Programs, Annual Report to Congress FY 2005, Submitted to Congress 2008.

to approve other technologically advanced sampling devices that are capable of monitoring dust concentrations on a real-time and continuous basis.

MSHA and NIOSH have developed new procedures that would allow manufacturers to apply for approval of the new CPDM technology. This proposal would require manufacturers to demonstrate that devices using continuous monitoring technology are durable and can withstand the mine environment; can be worn by miners performing normal tasks for an entire work shift; provide accurate and precise measurements; and can be safely used in mine atmospheres where explosive mixtures of gases may occur.

This proposed revision to the approval regulations is an important initial step to permit the introduction of the new continuous monitoring technology in coal mines. The use of real-time monitoring devices in the future would allow mine management to take immediate action to prevent miner overexposure and thereby reduce occupational lung disease.

This proposed rule would assure that existing health benefits associated with the CMDPSU are maintained by updating existing requirements for the approval of a CMDPSU to reflect the current state of this technology.

The introduction of the CPDM likely would establish some degree of competition in the broader market of personal monitoring technology for coal mining, since the CPDM is likely to evolve as a potential substitute for the existing CMDPSU, which is currently unique to this broader market and produced by a single manufacturer. Moreover, the proposed requirements for the approval of the CPDM, which are essentially performance-oriented, would provide incentives for continued innovation of this technology.

C. Compliance Costs

There is only one manufacturer of the existing sampler technology, CMDPSU. No new applications for approval have been received in over 30 years. The proposed revisions to the design requirements for the CMDPSU would not require this manufacturer to submit an application for a new approval or any additional information to MSHA and NIOSH. The CMDPSU approved under existing requirements already meets the proposed updated requirements since the requirements have been integrated by policy into existing approvals.

MSHA and NIOSH are aware of only one prospective manufacturer capable of mass producing a CPDM that could be submitted for approval under this proposal. The Agencies believe that very few instrument manufacturers have the capacity or interest to develop technology suitable for directly and continuously measuring concentrations of respirable coal mine dust in mine atmospheres. The current pre-commercial CPDM required a federal investment of approximately $5.3 million, an additional private investment of approximately $750,000, and more than four years of development before a suitable device could be produced that could accurately measure respirable dust concentrations in coal mine atmospheres. It is likely that few, if any, firms would undertake this substantial level of research and development given the limited market for such a product.

Consequently, MSHA and NIOSH expect that in the first year under the proposed rule, there would be one manufacturer filing an application seeking approval of a CPDM. The cost of the proposed rule in the first year is estimated to be $293,000. The first year approval costs are annualized over an indefinite time period by using a 7 percent discount factor that results in a cost of approximately $20,500 ($293,000 × 0.07). The $293,000 consists of approximately: $250,000 for the applicant to have tests performed on the CPDM by a third party (under proposed §§ 74.7 and 74.8); $9,500 for MSHA to evaluate and test the CPDM for intrinsic safety (under proposed § 74.11); $3,200 to file an application for approval of the CPDM (under proposed § 74.13); and $30,000 for the cost of the CPDMs provided to NIOSH and MSHA by the applicant (under proposed §§ 74.16(a) and (b)). Derivation of the proposed rule costs are detailed below.

Proposed §§ 74.7 and 74.8 would require tests that the applicant must have performed by a third party. These tests are for: Ergonomic design (under proposed § 74.7(b)); environmental conditions (under proposed § 74.7(e)); electromagnetic interference (under proposed § 74.7(f)); flow stability and calibration of pump (under proposed § 74.7(j)); and accuracy testing which includes reliability measurement, precision, and bias testing (under proposed §§ 74.8(c), (d), and (e)). MSHA estimates that it would cost the applicant approximately $250,000 to conduct the tests that are required by proposed §§ 74.7 and 74.8. The annualized cost is $17,500 ($250,000 × 0.07).

Proposed § 74.11 requires that the applicant submit the CPDM to MSHA for testing and evaluation, pursuant to 30 CFR § 18.68 to determine whether the electronic components of the CPDM unit submitted for approval meet the applicable permissibility provisions. The following tests would be performed by MSHA under § 18.68(a)(1): Current limiting resistor adequacy test; coal dust thermal ignition test; optical isolator test; impact test and force test of encapsulated electrical assemblies; drop testing intrinsically safe apparatus; mechanical test of partitions; piezoelectric device impact test; and dielectric strength test. The battery flash current test would be performed under §§ 18.68(a)(1) and (b)(1). The methane thermal ignition test would be performed under §§ 18.68(a)(1) and (b)(6). The maximum surface temperature test would be performed under § 18.68(a)(1) and (b)(3). The spark ignition test would be performed under §§ 18.68(a)(1), (a)(2), (a)(4), (a)(5), (b)(4), and (b)(5).

The estimated time per application is 45 hours for evaluation and 40 hours for testing. MSHA charges an hourly fee of $84 per hour for evaluation and testing time. In addition, MSHA applies a support factor of 1.617 to cover the administrative, clerical and technical support services involved in evaluating an application. Thus, the cost for MSHA evaluation and testing is approximately $9,500 [(45 hrs. × $84 × 1.617) + (40 hrs. × $84)]. The annualized cost is approximately $700 ($9,500 × 0.07).

Proposed § 74.13(b) requires that a written application for approval be submitted to MSHA and NIOSH in duplicate. MSHA estimates that it would take an engineer, earning $74.32 per hour, a total of 40 hours to prepare and compile the materials needed to accompany an application. MSHA estimates that it would take a clerical employee, earning $26.37 per hour, 0.25 hours (15 minutes) to copy an application, averaging 250 pages, at $0.15 per page. The postage cost per application is estimated to be $5. Thus, the cost to file an application is estimated at $3,200 [(1 application × 40 hrs. x $74.32 per hr.) + (0.25 hrs. × $26.37 per hour × 4 copies) + (250 pages x $0.15 cost per page × 4 copies) + ($5 × 4 copies)]. The annualized cost is approximately $200 ($3,200 × 0.07).

Proposed § 74.16(a) would require that MSHA and NIOSH each retain one CPDM that is submitted with the application. In addition, proposed § 74.16(b) would require that NIOSH receive one commercially produced CPDM free of charge, if it is approved by NIOSH and MSHA. MSHA estimates that the cost of a CPDM would range between $8,000 and $12,000 (for an average of $10,000 per device). Thus, the cost to provide two CPDMs with the application and one subsequent to the

approval of the application is estimated to be $30,000 (3 CPDMs × $10,000 per CPDM). The annualized cost is $2,100 ($30,000 × 0.07).

D. Economic and Technological Feasibility

Although the CPDM is a new type of sampling device, the proposed rule is technologically feasible. The device has been developed and successfully tested in underground coal mines. This proposed rule would put in place the necessary requirements to enable a prospective manufacturer to seek NIOSH and MSHA approval of a CPDM for use in coal mines. The one-time, first year cost to obtain an approval for the CPDM is estimated to be approximately $293,000, which MSHA concludes is economically feasible for a CPDM manufacturer.

V. Regulatory Flexibility Act and Small Business Regulatory Enforcement Fairness Act

Pursuant to the Regulatory Flexibility Act (RFA) of 1980, as amended by the Small Business Regulatory Enforcement Fairness Act (SBREFA), MSHA has analyzed the impact of the proposed rule on small entities. Based on that analysis, MSHA has notified the Chief Counsel for Advocacy, Small Business Administration, and made the certification under the Regulatory Flexibility Act at 5 U.S.C. 605(b) that the proposed rule would not have a significant economic impact on a substantial number of small entities.

The proposed rule establishes procedures and requirements for approving a CPDM for use in coal mines. A manufacturer of a CPDM receiving such an approval would thus be able to market the device to U.S. coal mine operators and MSHA. This U.S. market might also provide a commercial base for marketing the device to coal mine operators internationally.

Currently, such device has not been commercialized because the existing design specifications of 30 CFR Part 74 provide for the approval of only one, substantially different type of technology for monitoring concentrations of respirable dust in coal mine atmospheres. The proposed requirements take into account the design and performance of a prototype CPDM, which was developed with the financial and technical support of MSHA and NIOSH, in collaboration with a private sector monitoring technology company, as discussed under section I(A) of this preamble. NIOSH has carefully evaluated the design and performance of this prototype. This empirical basis assures the feasibility of the proposed requirements.

Accordingly, since this proposed rule would foster rather than inhibit such commercialization, since there is not currently a CPDM commercialized by any entity, and since the proposed rule takes into account the capabilities of the single currently available prototype for such devices, the proposed rule should not have a significant economic impact on a substantial number of small entities.

VI. Paperwork Reduction Act of 1995

The proposed rule will impose estimated information collection requirements of 41 burden hours which are related to filing approval applications required by proposed § 74.13. This burden would occur in the first year that the rule is in effect. MSHA estimates that it would take an engineer 40 hours to compile the material for the application, and a clerical employee 1 hour to prepare and send four copies of the application (0.25 hours per application × 4 copies). Two copies each of the application would need to be sent to MSHA and NIOSH. Based on hourly wage rates of $74.32 for an engineer and $26.37 for a clerical employee, the related burden costs are estimated to be approximately $3,000 (40 hrs. × $74.32) + (0.25 hrs. × $26.37 × 4 copies). The proposed burden will be accounted for in OMB control No. 1219–0066 which contains the burden for applications filed with MSHA that involve intrinsic safety testing.The information collection package has been submitted to the Office of Management and Budget (OMB) for review under 44 U.S.C. 3504(h) of the Paperwork Reduction Act of 1995, as amended. A copy of the information collection package can be obtained from the Department of Labor by e-mail request to *king.darrin@dol.gov* or by phone request at (202) 693–4129.

MSHA requests comments to:

- Evaluate whether the proposed collection of information is necessary for the proper performance of the functions of the agency, including whether the information will have practical utility;
- Evaluate the accuracy of the Agency's estimate of the burden of the proposed collection of information, including the validity of the methodology and assumptions used;
- Enhance the quality, utility, and clarity of the information to be collected; and
- Minimize the burden of the collection of information on those who are to respond, including through the use of appropriate automated, electronic, mechanical, or other technological collection techniques or other forms of information technology, *e.g.*, permitting electronic submission of responses.

Comments regarding the information collection requirements should be sent to both OMB and MSHA. Addresses for both offices can be found in the **ADDRESSES** section of this preamble. The regulated community is not required to respond to any collection of information unless it displays a current, valid, OMB control number. MSHA displays OMB control numbers in 30 CFR part 3.

VII. Other Regulatory Considerations

A. The Unfunded Mandates Reform Act of 1995

MSHA has reviewed the proposed rule under the Unfunded Mandates Reform Act of 1995 (2 U.S.C. 1501 *et seq.*). MSHA has determined that this proposed rule would not include any Federal mandate that may result in increased expenditures by State, local, or tribal governments; nor would it increase private sector expenditures by more than $100 million in any one year or significantly or uniquely affect small governments. Accordingly, the Unfunded Mandates Reform Act of 1995 (2 U.S.C. 1501 *et seq.*) requires no further agency action or analysis.

B. The Treasury and General Government Appropriations Act of 1999: Assessment of Federal Regulations and Policies on Families

This proposed rule would have no effect on family well-being or stability, marital commitment, parental rights or authority, or income or poverty of families and children. Accordingly, section 654 of the Treasury and General Government Appropriations Act of 1999 (5 U.S.C. 601 note) requires no further agency action, analysis, or assessment.

C. Executive Order 12630: Government Actions and Interference With Constitutionally Protected Property Rights

This proposed rule would not implement a policy with takings implications. Accordingly, E.O. 12630 requires no further Agency action or analysis.

D. Executive Order 12988: Civil Justice Reform

This proposed rule was written to provide a clear legal standard for affected conduct and was carefully reviewed to eliminate drafting errors and ambiguities, so as to minimize litigation and undue burden on the Federal court system. Accordingly, this proposed rule meets the applicable

standards provided in section 3 of E.O. 12988.

E. Executive Order 13045: Protection of Children From Environmental Health Risks and Safety Risks

This proposed rule would have no adverse impact on children. Accordingly, E.O. 13045 requires no further Agency action or analysis.

F. Executive Order 13132: Federalism

This proposed rule would not have ''federalism implications'' because it would not ''have substantial direct effects on the States, on the relationship between the national government and the States, or on the distribution of power and responsibilities among the various levels of government.'' Accordingly, E.O. 13132, requires no further Agency action or analysis.

G. Executive Order 13175: Consultation and Coordination With Indian Tribal Governments

This proposed rule would not have ''tribal implications'' because it would not ''have substantial direct effects on one or more Indian tribes, on the relationship between the Federal government and Indian tribes, or on the distribution of power and responsibilities between the Federal government and Indian tribes.'' Accordingly, E.O. 13175 requires, no further Agency action or analysis.

H. Executive Order 13211: Actions Concerning Regulations That Significantly Affect Energy Supply, Distribution, or Use

Executive Order 13211 requires agencies to publish a statement of energy effects when a rule has a significant energy action that adversely affects energy supply, distribution, or use. This proposed rule does not directly affect coal mines, only prospective manufacturers of CPDMs that seek to obtain the Agencies' approval for use of such monitoring devices in coal mines. Accordingly, MSHA has concluded that the proposed rule is not a ''significant energy action'' because it is not ''likely to have a significant adverse effect on the supply, distribution, or use of energy * * * (including a shortfall in supply, price increases and increased use of foreign supplies).'' Accordingly, E.O. 13211 requires no further Agency action or analysis.

I. Executive Order 13272: Proper Consideration of Small Entities in Agency Rulemaking

MSHA has reviewed the proposed rule to assess and take appropriate account of its potential impact on small businesses, small governmental jurisdictions, and small organizations. MSHA has determined and certified that the proposed rule would not have a significant economic impact on a substantial number of small entities.

List of Subjects in 30 CFR Part 74

Mine safety and health, Incorporation by reference, Occupational safety and health, Direct reading devices, Monitoring technology.

Dated: January 8, 2009.

Richard E. Stickler,

Acting Assistant Secretary for Mine Safety and Health.

For the reasons set out in the preamble, and under the authority of the Federal Mine Safety and Health Act of 1977 as amended by the Mine Improvement and New Emergency Response Act of 2006, MSHA proposes to amending chapter I of title 30 of the Code of Federal Regulations by revising part 74 to read as follows:

PART 74—COAL MINE DUST PERSONAL MONITORS

Subpart A—Introduction

Sec.
74.1 Purpose.
74.2 Definitions.

Subpart B—Requirements for Coal Mine Dust Personal Sampler Unit

74.3 Sampler unit.
74.4 Specifications of sampler unit.
74.5 Tests of coal mine dust personal sampler units.
74.6 Quality control.

Subpart C—Requirements for Continuous Personal Dust Monitors (CPDMs)

74.7 Design and construction requirements.
74.8 Measurement, accuracy, and reliability requirements.
74.9 Quality assurance.
74.10 Operating and maintenance instructions.
74.11 Tests of the CPDM.

Subpart D—General Requirements for All Devices

74.12 Conduct of tests; demonstrations.
74.13 Applications.
74.14 Certificate of approval.
74.15 Approval labels.
74.16 Material required for record.
74.17 Changes after certification.
74.18 Withdrawal of certification.

Authority: 30 U.S.C. 957.

Subpart A—Introduction

§ 74.1 Purpose.

The regulations in this part set forth the requirements for approval of coal mine dust measurement units designed to determine the concentrations of respirable dust in coal mine atmospheres; procedures for applying for such approval; test procedures; and labeling.

§ 74.2 Definitions.

(a) *Accuracy:* The ability of a monitor to determine the ''true'' concentration of the environment sampled. Accuracy describes the closeness of a typical measurement to the quantity measured, although it is defined and expressed in terms of the relative discrepancy of a typical measurement from the quantity measured. The accuracy of a monitor is the theoretical maximum error of measurement, expressed as the proportion or percentage of the amount being measured, without regard for the direction of the error, which is achieved with a 0.95 probability by the method.

(b) *Bias:* the uncorrectable relative discrepancy between the mean of the distribution of measurements from a monitor and the true concentration being measured.

(c) *Coal mine dust personal sampler unit (CMDPSU):* a personal device for measuring concentrations of respirable dust in coal mine atmospheres that meets the requirements specified under Subpart B of this part.

(d) *Continuous personal dust monitor (CPDM):* a personal device for continuously measuring concentrations of respirable dust in coal mine atmospheres that reports within-shift and end-of shift measurements of dust concentrations immediately upon the completion of the period of exposure that was monitored and that meets the requirements specified under Subpart C of this part.

(e) *ISO:* the International Organization for Standardization, an international standard-setting organization composed of representatives from various national standards-setting organizations. ISO produces industrial and commercial voluntary consensus standards used worldwide.

(f) *Precision:* the relative variability of measurements from a homogeneous atmosphere about the mean of the population of measurements, divided by the mean at a given concentration. It reflects the ability of a monitor to replicate measurement results.

Subpart B—Requirements for Coal Mine Dust Personal Sampler Unit

§ 74.3 Sampler unit.

A CMDPSU shall consist of (a) a pump unit, (b) a sampling head assembly, and (c) if rechargeable batteries are used in the pump unit, a battery charger.

§ 74.4 Specifications of sampler unit.

(a) *Pump unit:*

(1) *Dimensions*. The overall dimensions of the pump unit, hose connections, and valve or switch covers shall not exceed 4 inches (10 centimeters) in height, 4 inches (10 centimeters) in width, and 2 inches (5 centimeters) in thickness.

(2) *Weight*. The pump unit shall not weigh more than 20 ounces (567 grams).

(3) *Construction*. The case and all components of the pump unit shall be of sufficiently durable construction to endure the wear of use in a coal mine, shall be tight fitting to minimize the amount of dust entering the pump case, and shall be designed to protect against radio frequency interference and electromagnetic interference.

(4) *Exhaust*. The pump shall exhaust into the pump case, maintaining a slight positive pressure which will reduce the entry of dust into the pump case.

(5) *Switch*. The pump unit shall be equipped with an ON/OFF switch or equivalent device on the outside of the pump case. This switch shall be protected against accidental operation during use and protected to keep dust from entering the mechanisms.

(6) *Flow rate adjustment*. Except as provided in the last sentence of this paragraph, the pump unit shall be equipped with a suitable means of flow rate adjustment accessible from outside the case. The flow rate adjuster shall be recessed in the pump case and protected against accidental adjustment. If the pump is capable of maintaining the flow rate consistency required in this part without adjustment, an external flow rate adjuster is not required.

(7) *Battery*. The power supply for the pump shall be a suitable battery located in the pump case or in a separate case which attaches to the pump case by a permissible electrical connection.

(8) *Pulsation*. (i) The irregularity in flow rate due to pulsation shall have a fundamental frequency of not less than 20 Hz.

(ii) The quantity of respirable dust collected with a sampler unit shall be within ±5 percent of that collected with a sampling head assembly operated with nonpulsating flow.

(9) *Belt clips*. The pump unit shall be provided with a belt clip which will hold the pump securely on a coal miner's belt.

(10) *Recharging connection*. A suitable connection shall be provided so that the battery may be recharged without removing the battery from the pump case or from the battery case if a separate battery case is used.

(11) *Flow rate indicator*. A visual indicator of flow rate shall be provided either as an integral part of the pump unit or of the sampling head assembly. The flow rate indicator shall be calibrated within ±5 percent at 2.2, 2.0, and 1.7 liters per minute to indicate the rate of air passing through the accompanying sampling head assembly.

(12) *Flow rate range*. The pump shall be capable of operating within a range of from 1.5 to 2.5 liters per minute and shall be adjustable over this range.

(13) *Flow rate consistency*. The flow shall remain within ±0.1 liters per minute over at least a 10-hour period when the pump is operated at 2 liters per minute with a standard sampling head assembly.

(14) *Flow restriction indicator*. The pump shall be capable of detecting restricted flow and providing a visual indication if it occurs. The flow restriction indicator shall remain activated until the cause is corrected. The pump shall shut down automatically if flow is restricted for one minute.

(15) *Duration of operation*. The pump with a fully charged battery pack shall be capable of operating for (i) not less than 8 hours at a flow rate of 2 liters per minute against a resistance of 25 inches (64 centimeters) of water measured at the inlet of the pump; and (ii) for not less than 10 hours at a flow rate of 2 liters per minute against a resistance of 15 inches (38 centimeters) of water measured at the inlet of the pump.

(16) *Low battery indicator*. The pump unit shall be equipped with a visual indicator of low battery power.

(17) *Elapsed time indicator*. The pump unit shall be capable of (i) displaying the actual pump run time in minutes (up to 999 minutes) and (ii) retaining the last reading after the pump is shut down due to either a flow restriction described in paragraph (a)(14) or low battery power described in paragraph (a)(16) or at the end of the sampling shift.

(b) *Sampling head assembly*. The sampling head assembly shall consist of a cyclone and a filter assembly as follows:

(1) *Cyclone*. The cyclone shall consist of a cyclone body with removable grit cap and a vortex finder and shall be constructed of nylon or a material equivalent in performance. The dimensions of the components, with the exception of the grit cap, shall be identical to those of a Door-Oliver 10 millimeter cyclone body, part No. 28541/4A or 01B11476–01 and vortex finder, part No. 28541/4B.

(2) *Filter assembly*. The filter assembly shall meet the following requirements:

(i) *Filter*. The filter shall be a membrane filter type with a nominal pore size not over 5 micrometers. It shall be nonhydroscopic and shall not dissolve or decompose when immersed in ethyl or isopropyl alcohol. The strength and surface characteristics of the filter shall be such that dust deposited on its surface may be removed by ultrasonic methods without tearing the filter. The filter resistance shall not exceed 2 inches (0.5 centimeters) of water at an airflow rate of 2 liters per minute.

(ii) *Capsule*. The capsule enclosing the filter shall not permit sample air to leak around the filter and shall prevent visual inspection of the filter surface or filter loading. The capsule shall be made of nonhydroscopic material. Its weight, including the enclosed filter, shall not exceed 5 grams and it shall be pre-weighed by the manufacturer with a precision of ± 0.001 milligrams. Impact to the capsule shall not dislodge any dust from the capsule, which might then be lost to the weight measurement.

(iii) *Cassette*. The cassette shall enclose the capsule so as to prevent contamination and the intentional or inadvertent alteration of the dust deposited on the filter. The cassette must be easily removable without causing a loss or gain of capsule weight. Covers enclosing the capsule shall be designed to prevent contaminants from entering or dust from leaving the capsule when it is not in use, and to prevent the reversal of airflow through the capsule and other means of removing dust collected on the filter.

(3) *Arrangement of components*. The connections between the cyclone vortex finder and the capsule and between the capsule and the ¼-inch (0.64 centimeters) (inside diameter) hose mentioned in paragraph (b)(5) of this section shall be mechanically firm and shall not leak at a rate of more than 0.1 liters per hour under a vacuum of 4 inches (10 centimeters) of water.

(4) *Clamping of components*. The clamping and positioning of the cyclone body, vortex finder, and cassette shall be rigid, remain in alignment, be firmly in contact and airtight. The cyclone-cassette assembly shall be attached firmly to a backing plate or other means of holding the sampling head in position. The cyclone shall be held in position so that the inlet opening of the cyclone is pointing perpendicular to, and away from, the backing plate.

(5) *Hose*. A 3-foot (91 centimeter) long, ¼-inch (0.64 centimeters) (inside diameter) clear plastic hose shall be provided to form an airtight connection between the inlet of the sampler pump and the outlet of the filter assembly. A device, capable of sliding along the hose and attaching to the miner's outer garment, shall be provided.

(c) *Battery charger.*

(1) *Power supply.* The battery charger shall be operated from a 110 (VAC)(nominal), 60 Hz power line.

(2) *Connection.* The battery charger shall be provided with a cord and polarized connector so that it may be connected to the charge socket on the pump or battery case.

(3) *Protection.* The battery charger shall be fused, shall have a grounded power plug, and shall not be susceptible to damage by being operated without a battery on charge.

(4) *Charge rates.* The battery charger shall be capable of fully recharging the battery in the pump unit within 16 hours.

§ 74.5 Tests of coal mine dust personal sampler units.

(a) The National Institute for Occupational Safety and Health (NIOSH), Department of Health and Human Services, shall conduct tests to determine whether a CMDPSU that is submitted for approval under these regulations meets the requirements set forth in § 74.4.

(b) The Mine Safety and Health Administration (MSHA), Department of Labor, will conduct tests and evaluations to determine whether the pump unit of a CMDPSU that is submitted for approval under these regulations complies with the applicable permissibility provisions of this 30 CFR part 18.68.

§ 74.6 Quality control.

The applicant shall describe the way in which each lot of components will be sampled and tested to maintain its quality prior to assembly of each sampler unit. In order to assure that the quality of the CMDPSU will be maintained in production through adequate quality control procedures, MSHA and NIOSH reserve the right to have their qualified personnel inspect each applicant's control-test equipment procedures and records and to interview the employees who conduct the control tests. Two copies of the results of any tests made by the applicant on the CMDPSU or the pump unit thereof shall accompany an application provided under § 74.13 of this part.

Subpart C—Requirements for Continuous Personal Dust Monitors

§ 74.7 Design and construction requirements.

(a) *General requirement.* Continuous Personal Dust Monitors (CPDMs) shall be designed and constructed for coal miners to wear and operate without impeding their ability to perform their work safely and effectively, and shall be sufficiently durable to perform reliably in the normal working conditions of coal mines.

(b) *Ergonomic design testing.* Prior to submitting an application under § 74.13, the applicant shall develop a testing protocol and test the CPDM to assure that the device can be worn safely, without discomfort, and without impairing a coal miner in the performance of duties throughout a full work shift. The results of the test or tests shall also demonstrate that the device will operate consistently throughout a full work shift under representative working conditions of underground coal miners, including representative types and durations of physical activity, tasks, and changes in body orientation.

(1) The testing protocol shall specify that the tests be conducted in one or more active mines under routine operating conditions during production shifts.

(2) The applicant shall submit the testing protocol, in writing, to NIOSH for approval prior to conducting such testing.

(3) The applicant shall include the testing protocol and written test results in the application submitted to NIOSH as specified in § 74.13.

(4) NIOSH will advise and assist the applicant, as necessary, to develop a testing protocol and arrange for the conduct of testing specified in this paragraph.

(5) NIOSH may further inspect the device or conduct such tests as it deems necessary to assure the safety, comfort, practicality, and operability of the device when it is worn by coal miners in the performance of their duties.

(6) NIOSH may waive the requirement for the applicant to conduct testing under paragraph (b) of this section if NIOSH determines that such testing is unnecessary to assure the safety, comfort, practicality, and operability of the device when it is worn by coal miners in the performance of their duties.

(c) *Maximum weight.* A CPDM shall not add more than 2 kg to the total weight carried by the miner. CPDMs that are combined with other functions, such as communication or illumination, may exceed 2 kg provided that the resulting total added weight carried by the miner by such combination does not exceed 2 kg.

(d) *Dust concentration range.* The CPDM shall measure respirable coal mine dust concentrations accurately, as specified under § 74.8, for an end-of-shift average measurement, for concentrations within the range from 10% to 2 times the PEL for respirable coal mine dust. For end-of-shift average concentrations exceeding 2 times the PEL, the CPDM shall, at minimum, provide a reliable indication that the concentration exceeded 2 times the PEL.

(e) *Environmental conditions.* The CPDM shall operate reliably and measure respirable coal mine dust concentrations accurately, as specified under § 74.8, under the following environmental conditions:

(1) At any ambient temperature and varying temperatures from minus 30 to plus 40 degrees centigrade;

(2) At any atmospheric pressure from 700 to 1000 millibars;

(3) At any ambient humidity from 10 to 100 percent relative humidity; and

(4) While exposed to water mists generated for dust suppression and while monitoring atmospheres including such water mists.

(f) *Electromagnetic interference.* The CPDM shall meet the following standards for the control of and protection from electromagnetic interference.

(1) Emissions: ANSI C95.1–1982 (Standard for Safety Levels with Respect to Human Exposure to Radio Frequency Electromagnetic Fields) and 47 CFR part 15 (FCC Radio Frequency Devices). Persons must proceed in accordance with ANSI C95.1–1982. The Director of the Federal Register approves this incorporation by reference in accordance with 5 U.S.C. 552(a) and 1 CFR part 51. Persons may obtain a copy from American National Standards Institute (ANSI), 25 West 43rd Street, New York, NY 10036, *http://www.ansi.org.*

Persons may inspect a copy at MSHA, Office of Standards, Regulations, and Variances, 1100 Wilson Boulevard, Room 2350, Arlington, Virginia 22209–3939 or at the National Archives and Records Administration (NARA). For information on the availability of this material at NARA, call 202–741–6030, or go to: *http://www.archives.gov/federal_register/code_of_federal_regulations/ibr_locations.html.*

(2) Immunity/Susceptibility: IEC 61000–4 and –6 (Electromagnetic compatibility—Part 4–6: Testing and measurement techniques—Immunity to conducted disturbances, induced by radio-frequency fields). Persons must proceed in accordance with IEC 61000–4 and 6. The Director of the Federal Register approves this incorporation by reference in accordance with 5 U.S.C. 552(a) and 1 CFR part 51. Persons may obtain a copy from the International Electrotechnical Commission at the address provided below. International Electrotechnical Commission, IEC Central Office, 3, rue de Varembé, P.O.

Box 131, CH–1211 GENEVA 20, Switzerland, *http://www.standardsinfo.net*.

Persons may inspect a copy at MSHA, Office of Standards, Regulations, and Variances, 1100 Wilson Boulevard, Room 2350, Arlington, Virginia 22209–3939 or at the National Archives and Records Administration (NARA). For information on the availability of this material at NARA, call 202–741–6030, or go to: *http://www.archives.gov/federal_register/code_of_federal_regulations/ibr_locations.html*.

(g) *Durability testing.* The CPDM shall be designed and constructed to remain safe and measure respirable coal mine dust concentrations accurately, as specified under § 74.8 of this part, after undergoing the following durability tests, which NIOSH will apply to test units prior to their use in further testing under § 74.8 of this subpart:

Vibration	Mil-Std-810F, 514.5	US Highway vibration, restrained figure 514.5C–1	1 Hours/axis, 3 axis; total duration = 3 hrs, equivalent to 1,000 miles
Drop	3-foot drop onto bare concrete surface	In standard in-use configuration	1 drop per axis (3 total).

Persons must proceed in accordance with Mil-Std-810F, 514.5. The Director of the Federal Register approves this incorporation by reference in accordance with 5 U.S.C. 552(a) and 1 CFR part 51. Persons may obtain a copy from the U.S. Department of Defense at the address provided below. ASC/ENOI, Bldg. 560, 2530 Loop Road West, Wright-Patterson AFB OH 45433–7101, *http://www.dtc.army.mil/navigator/*.

Persons may inspect a copy at MSHA, Office of Standards, Regulations, and Variances, 1100 Wilson Boulevard, Room 2350, Arlington, Virginia 22209–3939 or at the National Archives and Records Administration (NARA). For information on the availability of this material at NARA, call 202–741–6030, or go to: *http://www.archives.gov/federal_register/code_of_federal_regulations/ibr_locations.html*.

(h) *Reporting of monitoring results.*

(1) The CPDM shall report continuous monitoring results legibly and/or audibly during use. A digital display, if used, shall be illuminated and shall provide a minimum character height of 6 millimeters. Other forms of display (*e.g.*, analogue) must provide comparable visibility. Auditory reporting, if used, shall be clear, have adjustable volume, and provide means for the user to obtain data reports repetitively. The CPDM shall also report end-of-shift results using computer software compatible with current, commonly used personal computer technology.

(2) The CPDM shall report results as cumulative mass concentration in units of mass per volume of air (mg/m^3).

(i) *Power requirements.*

The power source of the CPDM shall have sufficient capacity to enable continuous sampling for 12 hours in a coal mine dust atmosphere of 4.0 mg/m^3. If the CPDM uses a rechargeable battery, the battery charger shall be operated from a 110 (VAC) (nominal), 60 Hz power line.

(j) *Flow stability and calibration of pump.* If a pump is used, the flow shall not vary more than ±5 percent from the calibrated flow for 95 percent of samples taken of any continuous duration for up to 12 hours. The flow calibration maintenance interval to assure such performance shall be specified in the calibration instructions for the device.

(k) *Battery check.* If the CPDM uses a rechargeable battery, the CPDM shall have a feature to indicate to the user that the unit is adequately charged to provide accurate measurements for an entire shift of 12 hours under normal conditions of use.

(l) *Integration with other personal mining equipment.*

(1) If the CPDM is integrated or shares functions with any other devices used in mines, such as cap lights or power sources, then the applicant shall obtain approvals for such other devices, as might be required under federal regulations, prior to receiving final certification of the CPDM under this part.

(2) A CPDM that is integrated with another device shall be tested, pursuant to all the requirements under this part, with the other device coupled to the CPDM and operating.

(m) *Tampering safeguards or indicators.* The CPDM shall include a safeguard or indicator which either prevents intentional or inadvertent altering of the measuring or reporting functions or provides an indication that the measuring or reporting functions have been altered.

(n) *Maintenance features.* The CPDM shall be designed to assure that the device can be cleaned and maintained to perform accurately and reliably for the duration of its service life.

§ 74.8 Measurement, accuracy, and reliability requirements.

(a) *Breathing zone measurement requirement.* The CPDM shall be capable of measuring respirable dust within the personal breathing zone of the miner whose exposure is being monitored.

(b) *Accuracy.* The ability of a CPDM to determine the true concentration of respirable coal mine dust at the end of a shift shall be established through testing that demonstrates the following:

(1) For full-shift measurements of 8 hours or more, a 95 percent confidence that the recorded measurements are within ±25 percent of the true respirable dust concentration, as determined by CMDPSU reference measurements, over a concentration range of 10% to 2 times the PEL; and

(2) For intra-shift measurements of less than 8 hours, a 95 percent confidence that the recorded measurements are within ± 25 percent of the true respirable dust concentration, as determined by CMDPSU reference measurements, over the concentration range equating to 10% to 2 times the PEL for an 8-hour period.[1]

(c) *Reliability of measurements.* The CPDM shall meet the accuracy requirements under paragraph (b) of this section, regardless of the variation in density, composition, or size distribution of respirable coal mine dust particles, or the presence of spray mist.

(d) *Precision.* The precision of the CPDM shall be established through testing to determine the variability of multiple measurements of the same dust concentration, as defined by the relative standard deviation of the distribution of measurements. The relative standard

[1] The equivalent dust concentration range to the 8-hour range of 10% to 2 times the PEL (currently 0.2 − 4 mg/m^3) is calculated by multiplying this 8-hour range by the dividend of eight hours divided by the duration of the intrashift measurement specified in units of hours. For example, for a measurement taken at exactly one hour into the shift, the 8-hour equivalent dust concentration range would be a one-hour average concentration range of: 8 hours/1 hour × (0.2 − 4 mg/m^3) = *1.6 − 32 mg/m^3*; for a two-hour measurement, the applicable concentration range would be calculated as: 8 hours/2 hours × (0.2 − 4 mg/m^3) = *0.8 − 16 mg/m^3*; for a 4-hours measurement, the equivalent range would be: *0.4 − 8 mg/m^3*; * * * etc. A CPDM must perform accurately, as specified, for intrashift measurements within such equivalent concentration ranges.

deviation shall be less than 0.1275 without bias for both full-shift measurements of 8 hours or more, and for intra-shift measurements of less than 8 hours within the dust concentration range equating to 10% to 2 times the PEL for an 8-hour period, as specified under paragraph (b)(2) of this section.

(e) *Bias.* The bias of the CPDM measurements shall be limited such that the uncorrectable discrepancy between the mean of the distribution of measurements and the true dust concentration being measured during testing shall be no greater than 10 percent. Bias must be constant over the range of dust concentration levels tested, between 10% and 2 times the PEL for an 8-hour sampling period.

(f) *Testing conditions.* Laboratory and mine testing of the CPDM for accuracy, precision, bias, and reliability under diverse environmental conditions (as defined under § 74.7(e) and (g)) shall be determined using the NIOSH testing procedure: ''Continuous Personal Dust Monitor Testing Procedures'' available at: *http://www.cdc.gov/niosh/mining*. All testing results shall be submitted to NIOSH in writing on the application filed under § 74.13.

§ 74.9 Quality assurance.

(a) *General requirements.* The applicant shall be responsible for the establishment and maintenance of a quality control system that assures that devices produced under the applicant's certificate of approval meet the specifications to which they are certified under this part and are reliable, safe, effective, and otherwise fit for their intended use. To establish and to maintain an approval under this part, the applicant shall:

Submit a copy of the most recent registration under ISO Q9001–2000, or under any updated version of this quality management standard published by ISO:

(i) With the application for approval under § 74.13 of this part; and

(ii) Upon request by NIOSH, subsequent to the approval of a CPDM under this part.

Persons must proceed in accordance with Q9001–2000. The Director of the Federal Register approves this incorporation by reference in accordance with 5 U.S.C. 552(a) and 1 CFR part 51. Persons may obtain a copy from the International Organization for Standardization at the address provided below. International Organization for Standardization, ISO Central Secretariat, 1, ch. de la Voie-Creuse, Case Postale 56, CH–1211 GENEVA 20, Switzerland, *http://www.standardsinfo.net*.

Persons may inspect a copy at MSHA, Office of Standards, Regulations, and Variances, 1100 Wilson Boulevard, Room 2350, Arlington, Virginia 22209–3939 or at the National Archives and Records Administration (NARA). For information on the availability of this material at NARA, call 202–741–6030, or go to: *http://www.archives.gov/federal_register/code_of_federal_regulations/ibr_locations.html*.

(b) *Quality management audits.* Upon request, applicants or approval holders must allow NIOSH to inspect the quality management procedures and records, and to interview any employees who may be knowledgeable of quality management processes associated with the production of the CPDM. Audits may be conducted either on an occasional or periodic basis or in response to quality-related complaints or concerns.

(c) *Applicant remediation of quality management deficiencies.*

An applicant or approval holder must correct any quality management deficiency identified by an audit within a reasonable time as determined by NIOSH. Failure to correct a deficiency may result in NIOSH disapproving the pending application or, in the case of an approved device, revoking the approval of the device, until such time as NIOSH has determined that the deficiency is remedied.

§ 74.10 Operating and maintenance instructions.

(a) *Contents.* The manufacturer must include operating instructions and a maintenance and service life plan with each new CPDM unit sold. These documents must be clearly written.

(1) Operating and storage instructions must address the following topics and elements:

(i) An explanation of how the CPDM works;

(ii) A schematic diagram of the CPDM;

(iii) Procedures for wearing and use of the CPDM;

(iv) Procedures for calibration of the CPDM;

(v) Procedures for inspecting the operating condition of the CPDM;

(vi) Procedures and conditions for storage, including the identification of any storage conditions that would likely impair the effective functioning of the CPDM; and

(vii) Procedures and conditions of use, including identification of any conditions of use that would likely impair the effective functioning of the CPDM.

(2) The maintenance and service life plan must completely address the following topics:

(i) Any conditions that should govern the removal from service of the CPDM; and

(ii) Any procedures by which a user or others should inspect the CPDM, perform any maintenance and calibration procedures, and determine when the CPDM should be removed from service.

(b) *Submission to NIOSH for approval.* A copy of the instructions and plan under paragraph (a) of this section shall be submitted to NIOSH for approval with the application for approval of the device and resubmitted to NIOSH if substantive changes are made to the approved unit or approved instructions.

§ 74.11 Tests of the continuous personal dust monitor.

(a) *Applicant testing.* The applicant shall conduct tests to determine whether a CPDM that is submitted for approval under these regulations meets the requirements specified in §§ 74.7–74.8 of this part, with the exception of durability testing, which shall be conducted by NIOSH as specified in § 74.7(g) of this part. Applicant testing shall be performed by an independent testing entity approved by NIOSH.

(b) *NIOSH testing assistance.* NIOSH will provide consultation to the applicant to identify and secure necessary testing services for meeting the requirements specified in §§ 74.7–74.8 of this part. Applicants must submit testing protocols to NIOSH prior to the conduct of testing to verify that protocols are adequate to address the requirements.

(c) *Reporting of applicant testing results.* The applicant shall arrange for the protocols and results from testing specified under paragraph (a) of this section to be reported by the independent testing entity directly to NIOSH when submitting the application under § 74.13 of this part.

(d) *Intrinsic safety testing.* The applicant shall submit the CPDM to MSHA for testing and evaluation, pursuant to 30 CFR 18.68, to determine whether the electronic components of the CPDM submitted for approval meet the applicable permissibility provisions.

Subpart D—General Requirements for All Devices

§ 74.12 Conduct of tests; demonstrations.

(a) Prior to the issuance of a certificate of approval, only personnel of MSHA and NIOSH, representatives of the applicant, and such other persons as may be mutually agreed upon may observe the tests conducted. MSHA and NIOSH shall hold as confidential, and

shall not disclose, principles of patentable features, nor shall MSHA or NIOSH disclose any details of the applicant's drawings or specifications or other related material.

(b) After the issuance of a certificate of approval, MSHA or NIOSH will conduct such public demonstrations and tests of the approved device as MSHA or NIOSH deem appropriate, and may reveal the protocols and results of testing considered for the approval of the device. The conduct of any additional investigations, tests, and demonstrations shall be under the sole direction of MSHA and NIOSH and any other persons shall be present only as observers. The Freedom of Information Act governs disclosure of applicant materials requested by the public.

§ 74.13 Applications.

(a) Testing of a CMDPSU will be undertaken by NIOSH, and testing of the pump unit of such a sampler unit will be undertaken by MSHA, only pursuant to a written application in duplicate. Each copy of the application must be accompanied by complete scale drawings, specifications, and a description of materials. Ten complete CMDPSUs must be submitted to NIOSH with the application, and one pump unit must be sent to MSHA.

(b) Testing of a CPDM will be undertaken by the applicant as specified under § 74.11 and by MSHA only pursuant to a written application in duplicate. Each copy of the application must be accompanied by complete scale drawings, specifications, a description of materials, and a copy of the testing protocol and test results which were provided directly to NIOSH by the independent testing entity, as specified under § 74.11. Three complete CPDM units must be sent to NIOSH with the application, and one CPDM unit must be sent to MSHA.

(c) Complete drawings and specifications shall be adequate in number and fully detailed to identify the design of the CMDPSU or pump unit thereof or of the CPDM and to disclose the dimensions and materials of all component parts.

§ 74.14 Certificate of approval.

(a) Upon completion of the testing of a CMDPSU or the pump unit thereof, or after review of testing protocols and testing results for the CPDM, NIOSH or MSHA, as appropriate, shall issue to the applicant either a certificate of approval or a written notice of disapproval, as the case may require. NIOSH shall not issue a certificate of approval unless MSHA has first issued a certificate of approval for either the pump unit of a CMDPSU or for the CPDM. No informal notification of approval will be issued. If a certificate of approval is issued, no test data or detailed results of tests will accompany such approval. If a notice of disapproval is issued, it will be accompanied by details of the defects, resulting in disapproval, with a view to possible correction.

(b) A certificate of approval will be accompanied by a list of the drawings and specifications covering the details of design and construction of the CMDPSU and the pump unit thereof, or of the CPDM, as appropriate, upon which the certificate of approval is based. The applicant shall keep exact duplicates of the drawings and specifications submitted to NIOSH and to MSHA relating to the CMDPSU, the pump unit thereof, or the CPDM, which has received a certificate of approval. The approved drawings and specifications shall be adhered to exactly in the production of the certified CMDPSU, including the pump unit thereof, or of the CPDM, for commercial purposes. In addition, the applicant shall observe such procedures for, and keep such records of, the control of component parts as either MSHA or NIOSH may in writing require as a condition of certification.

§ 74.15 Approval labels.

(a) Certificates of approval will be accompanied by photographs of designs for the approval labels to be affixed to each CMDPSU or CPDM, as appropriate.

(b) The labels showing approval by NIOSH and by MSHA shall contain such information as MSHA or NIOSH may require and shall be reproduced legibly on the outside of a CMDPSU or CPDM, as appropriate, as directed by NIOSH or MSHA.

(c) The applicant shall submit full-scale designs or reproductions of approval labels and a sketch or description of the position of the labels on each unit.

(d) Use of the approval labels obligates the applicant to whom the certificates of approval were issued to maintain the quality of the complete CMDPSU or CPDM, as appropriate, and to guarantee that the complete CMDPSU or CPDM, as appropriate, is manufactured or assembled according to the drawings and specifications upon which the certificates of approval were based. Use of the approval labels is authorized only on CMDPSUs or CPDMs, as appropriate, that conform strictly to the drawings and specifications upon which the certificates of approval were based.

§ 74.16 Material required for record.

(a) As part of the permanent record of the investigation, NIOSH will retain a complete CMDPSU or CPDM, as appropriate, and MSHA will retain a CMDPSU or CPDM, as appropriate, that has been tested and certified. Material not required for record purposes will be returned to the applicant at the applicant's request and expense upon receipt of written shipping instructions by MSHA or NIOSH.

(b) As soon as a CMDPSU or CPDM, as appropriate, is commercially available, the applicant shall deliver a complete unit free of charge to NIOSH at the address specified on the NIOSH Web page: *http://www.cdc.gov/niosh/mining*.

§ 74.17 Changes after certification.

(a) If the applicant desires to change any feature of a certified CMDPSU or a certified CPDM, the applicant shall first obtain the approval of NIOSH pursuant to the following procedures:

(1) Application shall be made as for an original certificate of approval, requesting that the existing certification be extended to encompass the proposed change. The application shall be accompanied by drawings, specifications, and related material, as in the case of an original application.

(2) The application and accompanying material will be examined by NIOSH to determine whether testing of the modified CMDPSU or CPDM or components will be required. Testing will be necessary if there is a possibility that the modification may adversely affect the performance of the CMDPSU or CPDM. NIOSH will inform the applicant whether such testing is required.

(3) If the proposed modification meets the pertinent requirements of these regulations, a formal extension of certification will be issued, accompanied by a list of new and revised drawings and specifications to be added to those already on file as the basis for the extension of certification.

(b) If a change is proposed in a pump unit of a certified CMDPSU or in electrical components of a CPDM, the approval of MSHA with respect to intrinsic safety shall be obtained in accordance with the procedures set forth in § 74.11(d).

§ 74.18 Withdrawal of certification.

Any certificate of approval issued under the regulations in this part may be revoked for cause by NIOSH or MSHA which issued the certificate.

[FR Doc. E9–534 Filed 1–15–09; 8:45 am]

BILLING CODE 4510–43–P

DEPARTMENT OF DEFENSE

Office of the Secretary

[DoD–2008–OS–0009; RIN 0790–AH77]

32 CFR Part 260

Vending Facility Program for the Blind on DoD-Controlled Federal Property

AGENCY: Department of Defense.

ACTION: Proposed rule.

SUMMARY: This proposed rule would reinstate Department of Defense regulations related to the vending facility program for the blind on DoD-controlled Federal property. This rule will not apply to military dining facilities that are subject to and defined in section 856 of the John Warner National Defense Authorization Act for Fiscal Year 2007.

DATES: Comments must be received by March 17, 2009.

ADDRESSES: You may submit comments, identified by docket number and/or RIN number and title, by any of the following methods:

- *Federal Rulemaking Portal: http://www.regulations.gov.* Follow the instructions for submitting comments.
- *Mail:* Federal Docket Management System Office, 1160 Defense Pentagon, Washington, DC 20301–1160.

Instructions: All submissions received must include the agency name and docket number or Regulatory Information Number (RIN) for this **Federal Register** document. The general policy for comments and other submissions from members of the public is to make these submissions available for public viewing on the Internet at *http://www.regulations.gov* as they are received without change, including any personal identifiers or contact information.

FOR FURTHER INFORMATION CONTACT: Priscilla Pazzano, 703–602–4601.

SUPPLEMENTARY INFORMATION: This proposed rule would reinstate 32 CFR Part 260 which was removed from the Code of Federal Regulations in 2004 and excepts from applicability military dining facilities that are subject to and defined in section 856 of the John Warner National Defense Authorization Act for Fiscal Year 2007 (Pub. L. 109–364).

Executive Order 12866, ''Regulatory Planning and Review''

It has been certified that proposed 32 CFR part 260 does not:

(1) Have an annual effect on the economy of $100 million or more or adversely affect in a material way the economy; a section of the economy; productivity; competition; jobs; the environment; public health or safety; or State, local, or tribunal governments or communities;

(2) Create a serious inconsistency or otherwise interfere with an action taken or planned by another Agency;

(3) Materially alter the budgetary impact of entitlements, grants, user fees, or loan programs, or the rights and obligations of recipients thereof; or

(4) Raise novel legal or policy issues arising out of legal mandates, the President's priorities, or the principles set forth in this Executive Order.

Section 202, Public Law 104–4, ''Unfunded Mandates Reform Act''

It has been certified that proposed 32 CFR part 260 does not contain a Federal mandate that may result in the expenditure by State, local and tribunal governments, in aggregate, or by the private sector, of $100 million or more in any 1 year.

Public Law 96–354, ''Regulatory Flexibility Act'' (5 U.S.C. 601)

It has been certified that proposed 32 CFR part 260 is not subject to the Regulatory Flexibility Act (5 U.S.C. 601) because it would not, if promulgated, have a significant economic impact on a substantial number of small entities. This proposed rule is consistent with the Randolph-Sheppard Act (20 U.S.C. 107), the implementing regulations of the U.S. Department of Education (34 CFR part 395), and Section 856 of the John Warner National Defense Authorization Act for Fiscal Year 2007.

Public Law 96–511, ''Paperwork Reduction Act'' (44 U.S.C. Chapter 35)

It has been certified that proposed 32 CFR part 260 does not impose reporting or recordkeeping requirements under the Paperwork Reduction Act of 1995.

Executive Order 13132, ''Federalism''

It has been certified that proposed 32 CFR part 260 does not have federalism implications, as set forth in Executive Order 13132. This rule does not have substantial direct effects on:

(1) The States;

(2) The relationship between the National Government and the States; or

(3) The distribution of power and responsibilities among the various levels of Government.

List of Subjects in 32 CFR Part 260

Persons with disabilities, Blind, Vending.

Accordingly, 32 CFR part 260 would be added to read as follows:

PART 260—VENDING FACILITY PROGRAM FOR THE BLIND ON DOD-CONTROLLED FEDERAL PROPERTY

Sec.
260.1 Purpose.
260.2 Applicability.
260.3 Definitions.
260.4 Policy.
260.5 Responsibilities.
260.6 Procedures.
260.7 Information requirements.

Authority: 20 U.S.C. 107.

§ 260.1 Purpose.

This part:

(a) Assigns responsibilities in compliance with 20 U.S.C. 107 *et seq.* and 34 CFR part 395 and establishes the following policies within the Department of Defense:

(1) Uniform policies for application of priority accorded the blind to operate vending facilities;

(2) Requirements for satisfactory vending facility sites on DoD-controlled property; and

(3) Vending machine income-sharing requirements on DoD-controlled property

(b) Prescribes requirements and operating procedures for the vending facility program for the blind on DoD-controlled property.

(c) Does not apply to full food services, mess attendant services, or services supporting the operation of a military dining facility.

§ 260.2 Applicability.

This part applies to:

(a) Office of the Secretary of Defense, the Military Departments, the Office of the Chairman of the Joint Chiefs of Staff and the Joint Staff, the Combatant Commands, the Office of the Inspector General of the Department of Defense, the Defense Agencies, the Department of Defense Field Activities, and all other organizational entities in the Department of Defense (hereafter referred to collectively as the ''DoD Components'').

(b) Vending facility sites on DoD-controlled property.

§ 260.3 Definitions.

Blind licensee. A blind person licensed by the State licensing agency to operate a vending facility on DoD-controlled property.

Cafeteria. A food dispensing facility capable of providing a broad variety of prepared foods and beverages (including hot meals) primarily through the use of a line where the customer serves himself or herself from displayed selections. A cafeteria may be fully automatic, or some limited waiter or waitress service may be available and

provided within a cafeteria and table or booth seating facilities are always provided. The DoD Component food dispensing facilities that conduct cafeteria-type operations during part of their normal operating day and full table-service operations during the remainder of their normal operating day are not ''cafeterias'' if they engage primarily in full table service operations.

Direct competition. The presence and operation of a DoD Component vending machine or a vending facility on the same DoD-controlled property as a vending facility operated by a blind vendor. Vending machines or vending facilities operated in areas serving employees, the majority of whom normally do not have access (in terms of uninterrupted ease of approach and the amount of time required to patronize the vending facility) to the vending facility operated by a blind vendor, shall not be considered to be in direct competition with the vending facility operated by a blind vendor.

DoD-controlled property. Federal property that is owned, leased, or occupied by DoD.

Federal employees. Civilian-appropriated fund and nonappropriated fund employees of the United States.

Federal property. Any building, land, or other real property owned, leased, or occupied by DoD in the United States.

Individual location, installation, or facility. A single building or a self-contained group of buildings. A self-contained group of buildings refers to two or more buildings that must be located in close proximity to each other and between which a majority of the Federal employees working in such buildings regularly move from one building to another in the normal course of their official business during a normal working day.

License. A written instrument issued by a State licensing agency to a blind person, authorizing that person to operate a vending facility on DoD-controlled property.

Military dining facility. A facility owned, operated, or leased and wholly controlled by DoD and used to provide dining services to members of the Armed Forces, including a cafeteria, military mess hall, military troop dining facility, or any similar dining facility operated for the purpose of providing meals to members of the Armed Forces.

Normal working hours. An 8-hour work period between the approximate hours of 0800 and 1800, Monday through Friday.

On-site official. The individual in command of an installation or separate facility or location. For the Pentagon Reservation only, the Washington Headquarters Services (WHS) Director of the Defense Facilities Directorate, is designated as the on-site official.

Permit. The official approval given a State licensing agency by a department, agency, or instrumentality responsible for DoD &-controlled property whereby the State licensing agency is authorized to establish a vending facility.

Satisfactory site. An area fully accessible to vending facility patrons and having sufficient electrical, plumbing, heating, and ventilation outlets for the location and operation of a vending facility in compliance with applicable health laws and building requirements. A ''satisfactory site'' shall have a minimum of 250 square feet available for sale of items and for storage of articles necessary for the operation of a vending facility.

State. A state, the District of Columbia, the Commonwealth of Puerto Rico, a territory, or possession of the United States.

State licensing agency. The State agency designated by the Secretary of Education, to issue licenses to blind persons for the operation of vending facilities on Federal and other property.

Substantial alteration or renovation. A permanent material change in the floor area of a building that would render it appropriate for the location and operation of a vending facility by a blind vendor.

United States. The several States, the District of Columbia, the Commonwealth of Puerto Rico, and the territories and possessions of the United States.

Vending facility. Automatic vending machines, cafeterias, snack bars, cart service, shelters, counters, and such other appropriate auxiliary equipment that may be operated by blind licensees and that are necessary for the sale of newspapers, periodicals, confections, tobacco products, foods, beverages, and other articles and services to be dispensed automatically or manually and that are prepared on or off the premises according to applicable health laws. Also includes facilities providing the vending or exchange of chances for any lottery authorized by State law and conducted by an agency of a State within such State.

Vending machine. For the purposes of assigning vending machine income, a coin or currency operated machine that dispenses articles or services except that those machines operated by the United States Postal Service for the sale of postage stamps or other postal products and services, machines providing services of a recreational nature, and telephones shall not be considered to be vending machines.

Vending machine income.

(1) DoD Component receipts from the DoD Component vending machine operations on DoD-controlled property, where the machines are operated by any DoD Component activity, less costs incurred; or

(2) Commissions received by any DoD Component activity from a commercial vending firm that provides vending machines on DoD-controlled property.

(3) ''Costs incurred'' include costs of goods, including reasonable service and maintenance costs in accordance with customary business practices of commercial vending concerns, repair, cleaning, depreciation, supervisory and administrative personnel, normal accounting, and accounting for income-sharing.

Vendor. A blind licensee who is operating a vending facility on DoD-controlled property.

§ 260.4 Policy.

It is DoD policy that a DoD Component having accountability for real property shall extend priority on such property to the blind when implementing the Randolph-Sheppard Act, as set out in the following paragraphs:

(a) The blind shall be given priority in the establishment and operation of vending facilities.

(b) The blind shall be given priority in the award of contracts to operate cafeterias pursuant to Section 856 of the John Warner National Defense Authorization Act for Fiscal Year 2007 (Pub. L. 109–364).

(c) In conjunction with acquisition or substantial alteration or renovation of a building, satisfactory sites shall be provided for operation of blind vending facilities.

(d) Specified income from vending machines operated on DoD controlled property by a DoD Component either directly or by contract shall be given to State licensing agencies.

§ 260.5 Responsibilities.

(a) The Principal Deputy Under Secretary of Defense for Personnel and Readiness (PDUSD (P&R)), under the Under Secretary of Defense for Personnel and Readiness, shall establish policies and procedures and monitor the Vending Facility Program

(b) The Head of the DoD Components, in monitoring their respective programs, shall:

(1) Approve or disapprove State licensing agency applications for permits and the provision of satisfactory sites;

(2) Issue policies and procedures to designate and establish responsibilities of the on-site official;

(3) Suspend or terminate a permit to operate a vending facility after consulting with the PDUSD(P&R) where circumstances warrant.

(4) Ensure appropriate real property outgrants are accomplished in accordance with DoDI 4165.70 [1] and consistent with the Randolph-Sheppard Act (20 U.S.C. 107) and the implementing regulations (34 CFR part 395).

(5) The On-Site Official shall be the point of contact with State licensing agencies and shall:

(i) Consult with State licensing agencies on articles and services to be provided;

(ii) Establish appropriate limitations on the location or operation of a vending facility upon finding that the granting of a priority under the Act would adversely affect the interests of the United States. The On-Site Official shall justify this limitation in writing through the Head of the DoD Component and the PDUSD(P&R) to the Secretary of Education for determination of whether the limitation is warranted.

(iii) Notify State licensing agencies of acquisition or substantial alteration or renovation of property;

(iv) Negotiate with State licensing agencies on other matters and adhere to guidance provided in § 260.6 of this part.

§ 260.6 Procedures.

The DoD Components in control of the maintenance, operation, and protection of Federal property shall take necessary action to ensure the requirements set forth in this Section are implemented for these properties.

(a) The blind have a priority to operate vending facilities on DoD property, whenever feasible, in light of appropriate space and potential patronage. Implementation of this priority is not required when:

(1) The number of people using the property is or will be insufficient to support a vending facility; or

(2) The Secretary of Education determines that the limitation on the placement or operation of a vending facility is warranted pursuant to 260.5(b)(5)(ii), which is binding on the DoD Component. Notice of the Secretary of Education's determination will be published in the **Federal Register**.

(b) Applications for permits by the State licensing agency to operate vending facilities (except cafeterias) on DoD-controlled property must be submitted in writing to the Head of the DoD Component through the on-site official. When an application is not approved, the Head of the DoD Component shall advise the State licensing agency in writing and shall indicate the reasons for the disapproval. Permits shall describe the location of the vending facility and shall be subject to the following requirements:

(1) The permit shall be issued in the name of the State licensing agency.

(2) The permit shall be issued for an indefinite period of time subject to suspension or termination upon failure to comply with agreed-upon terms. It shall be subject to termination by either party on 60 days written notice to the other party, in cases of:

(i) Inactivation of the installation or activity.

(ii) Loss of use of a building or other facility housing the vending facility.

(iii) Change in the DoD Component's requirements for service.

(iv) Inability of the State licensing agency to continue to operate the vending facility.

(3) The permit shall provide:

(i) No charge shall be made by the DoD Component to the State licensing agency for normal repair and maintenance of the building, cleaning areas adjacent to the designated vending facility boundaries, or trash removal from a designated collection point (not to include any hazardous waste).

(ii) The State licensing agency shall be responsible for cleaning and maintaining the vending facility appearance and its security within the designated boundaries of such facility and for all costs of every kind in conjunction with vending facility equipment, merchandise, and other products to be sold, except as provided in paragraph (b)(3)(v) of this section. Neither party shall be responsible for loss or damage to the other's property, unless caused by its acts or omissions. The State licensing agency shall also be responsible for the acts or omissions of the blind vendor, the vendor's employees, or agents.

(iii) Articles sold at such vending facilities may consist of newspapers, periodicals, publications, confections, tobacco products, foods, beverages, chances for any lottery authorized by State law and conducted by an agency of a State within such State, and other articles or services traditionally found in blind-operated vending facilities operated under 20 U.S.C. 107 *et seq.*, as determined by the State licensing agency, in consultation with the on-site official, to be suitable for a particular location. Articles and services may be automatically or manually dispensed.

(iv) Vending facilities shall be operated in compliance with applicable Federal, state, interstate and local laws and regulations, including those concerning health and sanitation, the environment, and building codes.

(v) Installation, modification, relocation, removal, and renovation of vending facilities shall be subject to the prior approval of the on-site official and the State licensing agency. The initiating party shall pay the costs of installation, modification, removal, relocation, or renovation. In any case of suspension or termination of a permit to operate a vending facility on the basis of noncompliance by either party, the costs of removal from the building shall be borne by the non-complying party.

(4) The permit shall also contain appropriate provisions for reimbursement or direct payment for support services such as utilities and telephone service.

(5) In the event the blind licensee fails to provide satisfactory service or otherwise fails to comply with the requirements of the permit issued to the State licensing agency, the on-site official shall, after coordinating with the Head of the DoD Component, notify the State licensing agency of this deficiency in writing and request corrective action within a specified reasonable time. The notice shall indicate that failure to correct the deficiency shall result in temporary suspension or termination of the permit, as appropriate. Suspension or termination action shall be taken by the Head of the DoD Component after consultation with the PDUSD(P&R).

(c) Any DoD Component-acquired (purchased, rented, leased, or constructed), substantially altered, or renovated building is required to have one or more satisfactory sites for a blind-operated vending facility, except as provided in paragraph (d)(1) of this section.

(1) A determination that a building contains a satisfactory site or sites is presumed if the State licensing agency and the on-site official consult and agree that the site or sites provided are satisfactory.

(i) The Heads of the DoD Components shall notify the appropriate State-licensing agency [2] by certified or registered mail, return receipt requested, of buildings to be acquired or substantially altered or renovated. This notification shall be provided at least 60 days in advance of the intended

[1] Available from *http://www.dtic.mil/whs/directives/corres/html/416570.htm.*

[2] See the U.S. Department of Education Web site, Office of Special Education and Rehabilitative Services at *http://www.ed.gov.*

acquisition date or the initiation of actual construction, alteration, or renovation.

As a practical matter, the State licensing agency should be contacted early in the planning or design stage of a project. This notification shall:

(A) State that a satisfactory site(s) for the location and operation of a blind vending facility is (are) included in the plans for the building.

(B) Include a copy of a single line drawing indicating the proposed location of such site(s).

(C) Advise the State licensing agency that, subject to the approval of the DoD Component, it shall be offered the opportunity to select the location and type of vending facility to be operated by a blind vendor prior to completion of the final space layout of the building.

(ii) Advise that the State licensing agency must respond within 30 days to the DoD Component, acknowledging receipt of the correspondence from the DoD Component and indicating whether it is interested in establishing a vending facility and, if interested, signifying its agreement or alternate selection of a location and its selection of type of vending facility. A copy of the written notice to the State licensing agency and the State licensing agency's response, if any, shall be provided to the Secretary of Education.

(iii) If the State licensing agency's response to the DoD Component indicates it does not desire to establish and operate a vending facility and sets forth any specific basis other than the insufficiency of patrons to support a vending facility, or if the State licensing agency does not respond within 30 days, then a site meeting the anticipated needs of the DoD Component shall be incorporated. Each such site shall have a minimum of 250 square feet for sale of items and for storage of articles necessary for the operation of a vending facility.

(iv) If the State licensing agency indicates that the number of persons using the property is or will be insufficient to support a vending facility, then a satisfactory site to be operated under the auspices of the State licensing agency shall not be incorporated. The On-Site Official shall, through the Head of the DoD component, notify the Secretary of Education of the State licensing agency's response.

(2) The requirement to provide a satisfactory site shall not apply:

(i) When fewer than 100 Federal employees (as defined in § 260.3 of this part) are located in the building during normal working hours; or

(ii) When the building contains less than 15,000 square feet to be used for Federal Government purposes, and the Federal Government space is used to provide services to the general public.

(iii) The provisions of paragraphs (d)(iv)(2)(i) and (d)(iv)(2)(ii) of this section do not preclude arrangements under which blind vending facilities may be established in buildings of a size or with an employee population less than that specified. For example, if a building is to be constructed that will contain only 30 Federal employees, upon agreement of the on-site official and the State licensing agency, the DoD Component may decide to provide a satisfactory site for a blind vending facility.

(3) When a DoD Component is leasing all or part of a privately owned building in which the lessor or any of its tenants have an existing restaurant or other food facility in a part of the building not covered by the lease, and operation of a vending facility would be in substantial direct competition with such restaurant or other food operation, the requirement to provide a satisfactory site does not apply.

(e) Vending machine income generated by the Department of Defense shall be shared with State licensing agencies as prescribed in paragraph (e)(1) of this section. The on-site official is responsible for collecting and accounting for such vending machine income (as defined in § 260.3 of this part) and for ensuring compliance with the requirements of this paragraph.

(1) The vending machine income-sharing requirements are as follows:

(i) One hundred percent of the vending machine income from vending machines in direct competition with blind-operated vending facilities shall be provided to the State licensing agency.

(ii) Fifty percent of the vending machine income from vending machines not in direct competition with blind-operated vending facilities shall be provided to the State licensing agency.

(iii) Notwithstanding paragraph (e)(1)(ii) of this section, thirty percent of the vending machine income from vending machines not in direct competition with blind-operated vending facilities and located where at least fifty percent of the total hours worked on the premises occurs during other than normal working hours (as defined in § 260.3 of this part) shall be provided to the State licensing agency.

(2) The determination of whether a vending machine is in direct competition with the blind-operated vending facility is the responsibility of the on-site official subject to the concurrence of the State licensing agency.

(3) These vending machine income-sharing requirements do not apply to:

(i) Income from vending machines operated by or for the military exchanges or ships' store systems; or

(ii) Income from vending machines, not in direct competition with a blind-operated vending facility, at any individual location, installation, or facility where the total of the vending machine income from all such machines at such location, installation, or facility does not exceed $3,000 annually.

(4) The payment to State licensing agencies under these income-sharing requirements must be made quarterly on a fiscal year basis.

(f) Pursuant to 34 CFR 395.37, whenever any State licensing agency for the blind determines that any DoD activity is failing to comply with the provisions of 20 U.S.C. 107 *et seq.* and all informal attempts to resolve the issues have been unsuccessful, the State licensing agency may file a complaint with the Secretary of Education.

§ 260.7 Information requirements.

Within 90 days after the end of each fiscal year, the DoD Components shall forward to the PDUSD (P&R) the total number of applications for vending facility locations received from State licensing agencies, the number accepted, the number denied, the number still pending, the total amount of vending machine income collected (as defined in § 260.3 of this part, excluding income exempt from the income sharing requirements by § 260.6(e)(3) of this part), and the amount of such vending machine income disbursed to State licensing agencies in each State. These reporting requirements have been assigned Report Control Symbol DD–P&R(A)2210, according to DoD 8910.1–M.[3]

Dated: January 8, 2009.

Patricia L. Toppings,

OSD Federal Register, Liaison Officer, Department of Defense.

[FR Doc. E9–460 Filed 1–15–09; 8:45 am]

BILLING CODE 5001–06–P

[3] Available from *http://www.dtic.mil/whs/directives/corres/pdf/891001m.pdf.*

ENVIRONMENTAL PROTECTION AGENCY

40 CFR Parts 50 and 51

[EPA–HQ–OAR–2007–0956, FRL–8762–5]

RIN 2060–AO96

Proposed Rule To Implement the 1997 8-Hour Ozone National Ambient Air Quality Standard: Revision on Subpart 1 Area Reclassification and Anti-Backsliding Provisions Under Former 1-Hour Ozone Standard; Proposed Deletion of Obsolete 1-Hour Ozone Standard Provision

AGENCY: Environmental Protection Agency (EPA).

ACTION: Proposed rule.

SUMMARY: The EPA proposes to revise the rule for implementing the 1997 8-hour ozone national ambient air quality standard (NAAQS) for several of the limited portions of the rule vacated by the U.S. Circuit Court of Appeals for the District of Columbia. The proposal addresses the classification system for the subset of initial 8-hour ozone nonattainment areas that the implementation rule originally covered under Clean Air Act (CAA or Act) title I, part D, subpart 1. The proposal also addresses how 1-hour ozone contingency measures that apply for failure to attain or make reasonable progress toward attainment of the 1-hour standard should apply under the anti-backsliding provisions of the implementation rule. In addition, the proposal removes language relating to the vacated provisions of the rule that provided exemptions from the requirements of nonattainment new source review (NSR) and CAA section 185 penalty fees under the 1-hour standard. The EPA plans to issue a separate proposed rule providing additional guidance as to how these two requirements (185 fees and NSR) now apply.

In addition, this proposal includes the deletion of an obsolete provision in the 1-hour ozone standard itself.

DATES: *Comments.* Comments must be received on or before February 17, 2009.

Public Hearing. If anyone contacts us requesting a public hearing by January 26, 2009, we will hold a public hearing approximately 30 days after publication in the **Federal Register**. Additional information about the hearing would be published in a subsequent **Federal Register** notice.

ADDRESSES: Submit your comments, identified by Docket ID No. EPA–HQ–OAR–2007–0956, by one of the following methods:

- *www.regulations.gov:* Follow the on-line instructions for submitting comments.
- *E-mail: a-and-r-docket@epa.gov.*
- *Fax:* (202) 566–9744.
- *Mail:* Air and Radiation Docket and Information Center, Attention Docket ID No. EPA–HQ–OAR–2007–0956, Environmental Protection Agency, 1301 Constitution Ave., NW., Washington, DC 20460. *Mail Code:* 2822T. Please include two copies if possible.
- *Hand Delivery:* Air and Radiation Docket and Information Center, Attention Docket ID No. EPA–HQ–OAR–2007–0956, Environmental Protection Agency in the EPA Headquarters Library, Room Number 3334 in the EPA West Building, located at 1301 Constitution Ave., NW., Washington, DC. The EPA/DC Public Reading Room hours of operation will be 8:30 a.m. to 4:30 p.m. Eastern Standard Time (EST), Monday through Friday, Air and Radiation Docket and Information Center.

Instructions: Direct your comments to Docket ID No. EPA–HQ–OAR–2007–0956. The EPA's policy is that all comments received will be included in the public docket without change and may be made available on-line at *www.regulations.gov*, including any personal information provided, unless the comment includes information claimed to be confidential business information (CBI) or other information whose disclosure is restricted by statute. Do not submit information that you consider to be CBI or otherwise protected through *www.regulations.gov*, or e-mail. The *www.regulations.gov* Web site is an ''anonymous access'' system, which means EPA will not know your identity or contact information unless you provide it in the body of your comment. If you send an e-mail comment directly to EPA without going through *www.regulations.gov*, your e-mail address will be automatically captured and included as part of the comment that is placed in the public docket and made available on the Internet. If you submit an electronic comment, EPA recommends that you include your name and other contact information in the body of your comment and with any disk or CD–ROM you submit. If EPA cannot read your comment due to technical difficulties and cannot contact you for clarification, EPA may not be able to consider your comment. Electronic files should avoid the use of special characters, any form of encryption, and be free of any defects or viruses. For additional information about EPA's public docket, visit the EPA Docket Center homepage at *http://www.epa.gov/epahome/dockets.htm*. For additional instructions on submitting comments, go to the **SUPPLEMENTARY INFORMATION** section of this document.

Docket: All documents in the docket are listed in *www.regulations.gov*. Although listed in the index, some information is not publicly available, i.e., CBI or other information whose disclosure is restricted by statute. Certain other material, such as copyrighted material, is not placed on the Internet and will be publicly available only in hard copy form. Publicly available docket materials are available either electronically in *www.regulations.gov* or in hard copy at the Air and Radiation Docket and Information Center in the EPA Headquarters Library, Room Number 3334 in the EPA West Building, located at 1301 Constitution Ave., NW., Washington, DC. The Public Reading Room is open from 8:30 a.m. to 4:30 p.m., Monday through Friday, excluding legal holidays. The telephone number for the Public Reading Room is (202) 566–1744.

Public Hearing: If a hearing is held, it will be held at the U.S. Environmental Protection Agency, 109 TW Alexander Drive, Research Triangle Park, North Carolina 27709, Building C.

FOR FURTHER INFORMATION CONTACT: For further general information or information on the issue of reclassification of subpart 1 areas, contact Mr. John Silvasi, Office of Air Quality Planning and Standards, U.S. Environmental Protection Agency, (C539–01), Research Triangle Park, NC 27711, phone number (919) 541–5666, fax number (919) 541–0824 or by e-mail at *silvasi.john@epa.gov*. For information on the 1-hour contingency measures issue discussed in this notice, contact Ms. Denise Gerth, Office of Air Quality Planning and Standards, (C504–03), U.S. EPA, Research Triangle Park, North Carolina 27711, phone number (919) 541–5550 or by e-mail at *gerth.denise@epa.gov*, fax number (919) 541–0824. To request a public hearing, contact Mrs. Pamela Long, Office of Air Quality Planning and Standards, (C504–03), U.S. EPA, Research Triangle Park, North Carolina 27711, telephone number (919) 541–0641 or by e-mail at *long.pam@epa.gov*, fax number (919) 541–5509.

SUPPLEMENTARY INFORMATION:

I. General Information

A. Does This Action Apply to Me?

Entities potentially affected directly by the subject rule for this action include state, local, and Tribal governments. Entities potentially

affected indirectly by this action include owners and operators of sources of emissions (volatile organic compounds (VOCs) and nitrogen oxides (NO_X)) that contribute to ground-level ozone concentrations.

B. What Should I Consider as I Prepare My Comments for EPA?

1. *Submitting CBI.* Do not submit this information to EPA through *www.regulations.gov* or e-mail. Clearly mark the part or all of the information that you claim to be CBI. For CBI information on a disk or CD–ROM that you mail to EPA, mark the outside of the disk or CD–ROM as CBI and then identify electronically within the disk or CD–ROM the specific information that is claimed as CBI. In addition to one complete version of the comment that includes information claimed as CBI, a copy of the comment that does not contain the information claimed to be CBI must be submitted for inclusion in the public docket. Information so marked will not be disclosed except in accordance with procedures set forth in 40 CFR part 2.

2. *Tips for Preparing Your Comments.* When submitting comments, remember to:

- Identify the rulemaking by docket number and other identifying information (subject heading, **Federal Register** date and page number).
- Follow directions—The agency may ask you to respond to specific questions or organize comments by referencing a Code of Federal Regulations (CFR) part or section number.
- Explain why you agree or disagree; suggest alternatives and substitute language for your requested changes.
- Describe any assumptions and provide any technical information and/or data that you used.
- If you estimate potential costs or burdens, explain how you arrived at your estimate in sufficient detail to allow for it to be reproduced.
- Provide specific examples to illustrate your concerns, and suggest alternatives.
- Explain your views as clearly as possible, avoiding the use of profanity or personal threats.
- Make sure to submit your comments by the comment period deadline identified.

C. Where Can I Get a Copy of This Document and Other Related Information?

In addition to being available in the docket, an electronic copy of this notice is also available on the World Wide Web. A copy of this notice will be posted at *http://www.epa.gov/ttn/naaqs/ozone/o3imp8hr/*.

D. What Information Should I Know About the Public Hearing?

EPA will hold a hearing only if a party notifies EPA by January 26, 2009, expressing its interest in presenting oral testimony on issues addressed in this notice. Any person may request a hearing by calling Mrs. Pamela Long at (919) 541–0641 before 5 p.m. by January 26, 2009. Persons interested in presenting oral testimony should contact Mrs. Pamela Long at (919) 541–0641. Any person who plans to attend the hearing should also contact Mrs. Pamela S. Long at (919) 541–0641 or visit the EPA's Web site at *http://www.epa.gov/ttn/naaqs/ozone/o3imp8hr/* and to learn if a hearing will be held.

If a public hearing is held on this notice, it will be held at the EPA, Building C, 109 T.W. Alexander Drive, Research Triangle Park, NC 27709. Because the hearing will be held at a U.S. Government facility, everyone planning to attend should be prepared to show valid picture identification to the security staff in order to gain access to the meeting room. Please check our Web site at *http://www.epa.gov/ttn/naaqs/ozone/o3imp8hr/* for information and updates concerning the public hearing.

If held, the public hearing will begin at 10 a.m. and end 1 hour after the last registered speaker has spoken. The hearing will be limited to the subject matter of this document. Oral testimony will be limited to 5 minutes. The EPA encourages commenters to provide written versions of their oral testimony either electronically (on computer disk or CD–ROM) or in paper copy. The list of speakers will be posted on EPA's Web site at *http://www.epa.gov/ttn/naaqs/ozone/o3imp8hr/*. Verbatim transcripts and written statements will be included in the rulemaking docket.

A public hearing would provide interested parties the opportunity to present data, views, or arguments concerning issues addressed in this notice. The EPA may ask clarifying questions during the oral presentations, but would not respond to the presentations or comments at that time. Written statements and supporting information submitted during the comment period will be considered with the same weight as any oral comments and supporting information presented at a public hearing.

E. How Is This Document Organized?

The Information Presented in This Document is Organized as Follows

I. General Information
A. Does This Action Apply to Me?
B. What Should I Consider as I Prepare My Comments for EPA?
C. Where Can I Get a Copy of This Document and Other Related Information?
D. What Information Should I Know About the Public Hearing?
E. How Is This Document Organized?
II. What Is the Background for This Proposal?
A. Litigation on EPA's 8-Hour Ozone NAAQS Implementation Rule (40 CFR Part 51, Sections 51.900 Through 51.918 (Collectively Subpart X))
B. Obsolete Provision in 1-Hour Ozone Standard (40 CFR Part 50)
III. This Action
A. Reclassification of Subpart 1 8-Hour Ozone Nonattainment Areas
1. Current Rule
2. Effect of Court Ruling
3. Proposed Rule
4. Consequences of Proposed Rule
B. Anti-Backsliding Under 1-Hour Ozone Standard—In General (Also Discussing NSR and Section 185 Penalty Fees)
C. Contingency Measures
1. Phase 1 Rule
2. Effect of Court Ruling
3. Proposed Rule
D. Deletion of Obsolete 1-Hour Ozone Standard Provision
IV. Statutory and Executive Order Reviews
A. Executive Order 12866: Regulatory Planning and Review
B. Paperwork Reduction Act
C. Regulatory Flexibility Act
D. Unfunded Mandates Reform Act
E. Executive Order 13132—Federalism
F. Executive Order 13175—Consultation and Coordination With Indian Tribal Governments
G. Executive Order 13045: Protection of Children From Environmental Health and Safety Risks
H. Executive Order 13211: Actions That Significantly Affect Energy Supply, Distribution, or Use
I. National Technology Transfer Advancement Act
J. Executive Order 12898: Federal Actions To Address Environmental Justice in Minority Populations and Low-Income Populations
K. Determination Under Section 307(d)
Appendix A to Preamble. Application of the Proposed Classification Scheme

II. What Is the Background for This Proposal?

A. Litigation on EPA's 8-Hour Ozone NAAQS Implementation Rule (40 CFR Part 51, Sections 51.900 Through 51.918 (Collectively Subpart X))

On April 30, 2004 (69 FR 23951), EPA published Phase 1 of a final rule that addressed the following key elements for implementing the 1997 8-hour ozone NAAQS: Classifications for the 1997 8-hour NAAQS; revocation of the 1-hour NAAQS (i.e., when the 1-hour NAAQS will no longer apply); anti-backsliding principles for 1-hour ozone

requirements to ensure continued progress toward attainment of the 1997 8-hour ozone NAAQS; attainment dates; and the timing of emissions reductions needed for attainment.

Following publication of the April 30, 2004 final Phase 1 Rule, the Administrator received three petitions, pursuant to section 307(b)(7)(B) of the CAA requesting reconsideration of a number of aspects of the final rule.[1] In final rulemaking on one of these petitions, EPA further clarified the implementation rule in two respects: (a) Section 185 penalty fees under the 1-hour standard would no longer be applicable after revocation of the 1-hour standard, and (b) the effective date of designations under the 1997 8-hour standard (i.e., for almost all areas, June 15, 2004) is the date for determining which 1-hour control measures continue to apply in an area once the 1-hour standard is revoked.[2] Additionally, EPA clarified that the requirement to have 1-hour contingency measures for failure to make progress or failure to attain would no longer apply once the 1-hour standard was revoked. On April 4, 2005 (70 FR 17018), we published a proposed rule to take comment on the issue of whether we should interpret the Act to require areas to retain major NSR requirements that apply to certain 1-hour ozone nonattainment areas in implementing the 1997 8-hour standard. We took final action on the NSR issues on June 30, 2005 (70 FR 39413; July 8, 2005), to interpret the CAA to not require NSR under the 1-hour standard once the 1-hour standard was revoked.

Several parties challenged EPA's Phase 1 Rule and the two reconsideration rules, and on December 22, 2006, the Court upheld certain challenges and rejected others, but purported to vacate the Phase 1 Implementation Rule in its entirety. *South Coast Air Quality Management District, et al.*, v. *EPA,* 472 F.3d 882 (D.C. Cir. 2006) *reh'g denied 489 F.3d 1245 (clarifying that the vacatur was limited to the issues on which the court granted the petitions for review).*

The EPA requested rehearing and clarification of the ruling and on June 8, 2007, the Court clarified that it was vacating the rule only to the extent that it had upheld petitioners' challenges. Thus, the following provisions of the Phase 1 rule were vacated:

- The provisions that placed 8-hour ozone nonattainment areas under subpart 1, part D, title I of the CAA instead of subpart 2.
- The provisions that waived obligations under the revoked 1-hour standard for NSR, section 185 penalty fees, and contingency measures for failure to attain or to make reasonable progress toward attainment of the 1-hour standard.[3]

B. Obsolete Provision in 1-Hour Ozone Standard (40 CFR Part 50)

When EPA promulgated the 8-hour ozone standard on July 18, 1997 (62 FR 38856), EPA initially revised 40 CFR 50.9 to revoke the 1-hour ozone standard once EPA determined that an area had air quality meeting the 1-hour standard. Subsequently, because the pending litigation over the 8-hour NAAQS created uncertainty regarding the 8-hour NAAQS and our implementation strategy, we revised 40 CFR 50.9 to place two limitations on our authority to apply the revocation rule: (1) The 8-hour NAAQS must no longer be subject to legal challenge, and (2) it must be fully enforceable.[4] (65 FR 45182, July 20, 2000). These limitations were codified as § 50.9(c). In the final Phase 1 Rule, we again revised § 50.9, this time to revise § 50.9(b) to provide for revocation of the 1-hour standard one year after designation of areas under the 1997 8-hour ozone standard. However, we neglected to remove paragraph (c) which was no longer necessary as the 8-hour standard was no longer subject to legal challenge and the standard had been upheld and was enforceable. *American Trucking Assoc.* v. *EPA* 283 F.3d 355 (DC Cir. 2002) (resolving all remaining legal challenges to the 8-hour ozone standard and upholding EPA's rule establishing that standard.)

III. This Action

A. Reclassification of Subpart 1 8-Hour Ozone Nonattainment Areas

1. Current Rule

In the Phase 1 implementation rule, EPA established which planning requirements of part D of title I of the Act would apply to areas for purposes of implementing the 8-hour ozone standard. 40 CFR 51.902. (''Which classification and nonattainment area planning provisions of the CAA shall apply to areas designated nonattainment for the 8-hour NAAQS?'') Paragraph (a) provided that areas with a 1-hour ozone design value equal to or greater than 0.121 parts per million (ppm) at the time of 8-hour NAAQS nonattainment designation (April 2004) would be classified in accordance with CAA title I, part D, section 181 of the CAA as interpreted in 40 CFR 51.903(a) for purposes of the 8-hour NAAQS, and would be subject to the requirements of CAA title I, part D, subpart 2 that apply for the area's classification. 40 CFR 51.903(a) set forth a translation into 8-hour design values of the CAA section 181 classification table, which is written in terms of 1-hour ozone design values. The preamble to the Phase 1 Rule provides the rationale and procedure for that translation. (*See* 69 FR 23958 *et seq.*) Section 181 in subpart 2 provides for specific classifications of each area by the magnitude of the ozone problem, providing shorter time periods for attainment for lower classifications and longer time periods for higher classifications. Higher classified areas also face additional specified control requirements than lower classified areas. A summary listing of the subpart 2 requirements by classification compared to subpart 1 requirements appeared in the proposed 8-hour ozone implementation rule. (*See* 68 FR 32864, Appendix A; June 2, 2003.)

Paragraph (b) of § 51.902 provided that 1997 8-hour ozone nonattainment areas with a 1-hour design value less than 0.121 ppm at the time of 8-hour NAAQS nonattainment designation would be covered under section 172(a)(1) of the CAA and would be subject to the requirements of CAA title I, part D, subpart 1 and not those of subpart 2.

The EPA designated areas for the 1997 8-hour standard on April 30, 2004 (69 FR 23858), and in accordance with section 181(a), the areas subject to subpart 2 under the Phase 1 Rule were classified by operation of law at that time. Of the 126 areas designated nonattainment, 84 were classified as under subpart 1, and the remaining 42 as under subpart 2.[5]

[1] Three petitions for reconsideration of the Phase 1 Rule were filed by: (1) Earthjustice on behalf of the American Lung Association, Environmental Defense, Natural Resources Defense Council, Sierra Club, Clean Air Task Force, Conservation Law Foundation, and Southern Alliance for Clean Energy; (2) the National Petrochemical and Refiners Association and the National Association of Manufacturers; and (3) the American Petroleum Institute, American Chemistry Council, American Iron and Steel Institute, National Association of Manufacturers and the U.S. Chamber of Commerce.

[2] 70 FR 30592 (May 26, 2005).

[3] The Court's June clarification confirmed that the December 2006 decision was not intended to establish a requirement that areas continue to demonstrate conformity for the 1-hour ozone standard for anti-backsliding purposes.

[4] In addition, in June 2003, we stayed our authority to apply the revocation rule pending our reconsideration in this rulemaking of the basis for revocation. (68 FR 38160, June 26, 2003).

[5] 13 of the 84 subpart 1 areas and one subpart 2 area were designated as ''Early Action Compact Areas'' with a deferred effective date for their nonattainment designation.

2. Effect of Court Ruling

In its decisions on the Phase 1 rule, the Court vacated the provisions that subjected any 8-hour ozone nonattainment areas to coverage under subpart 1. As the basis for its decision, the Court first agreed that Congress mandated that certain areas be subject to subpart 2, but ruled that our use of 0.121 ppm 1-hour design value as a dividing line was incorrect, holding that the Supreme Court had required use of 0.09 ppm on the 8-hour scale as the level for determining which areas Congress mandated would be subject to subpart 2.[6] Furthermore, although recognizing that Congress did not mandate that areas with an 8-hour design value be subject to subpart 2, the Court rejected as unreasonable our rationale for placing certain areas in subpart 1 instead of subpart 2. The Court vacated the Phase 1 rule to the extent it placed certain areas solely under the implementation provisions of subpart 1. Thus, a rule revision is necessary to address which provisions of the Act—only subpart 1 or subpart 2 [7]—should apply to those areas that were placed solely under subpart 1 in the Phase 1 Rule.

3. Proposed Rule

We are proposing that all areas designated nonattainment for the 1997 8-hour ozone standard will be classified under and subject to the nonattainment planning requirements of subpart 2. We would modify the regulatory text to remove current § 51.902(b) (which was vacated by the Court), which placed certain areas only under subpart 1. We considered the possibility of proposing to place areas with design values below 0.09 ppm 8-hour design value under subpart 1, but are not proposing this option in the interest of not further delaying implementation of the 8-hour ozone NAAQS that was established over 10 years ago.[8] However, we solicit comment on this part of this proposal.

Because these are the initial classifications for these areas for the 1997 ozone standard, the EPA further proposes to use the 8-hour ozone design values (from 2001–2003 air quality data) that were used to designate these areas nonattainment initially as the basis for classification and that the classification table in 40 CFR 51.903 (established by the Phase 1 Rule) be used for the classification. CAA section 181(a) provides that ''at the time'' areas are designated for a NAAQS, they will be classified ''by operation of law'' based on the ''design value'' of the areas and in accordance with table 1 of that section. Thus, this language specifies that the area will be classified based on the design value that existed for the area ''at the time'' of designation. Areas were designated nonattainment in 2004, based on design values derived from data from 2001–2003. We are soliciting comment on the approach of classifying these areas based on the same data that was used for designation.

Also, since the classification under this proposal would be the initial one under the 1997 8-hour standard for these areas after court vacatur of the method EPA used to treat these areas under subpart 1 only, EPA proposes that the provision of CAA section 181(a)(4) would apply to these areas, which would allow the Administrator in his discretion to adjust the classification—within 90 days after the initial classification—to a higher or lower classification ''* * * if the design value were 5 percent greater or 5 percent less than the level on which such classification was based.'' The EPA proposes to address requests for such classification adjustments for the newly-classified areas that were originally covered under subpart 1 in a manner similar to the way described for the original round of subpart 2 classifications.[9] This process is described at 69 FR 23863 *et seq.* (April 30, 2004).

Of the original 84 subpart 1 areas designated in the April 30, 2004 rulemaking, 13 areas successfully completed participation in the Early Action Compacts (EAC) program. As a result, these areas received deferred designations and classifications for as long as they continued to meet program requirements. These requirements were designed to ensure early reductions of ozone and progress toward attainment of the 1997 NAAQS. At the completion of the program, these areas were designated attainment for the 8-hour ozone NAAQS effective April 15, 2008.[10]

Despite the proposal to implement the 1997 8-hour standard by classifying nonattainment areas under title I, part D, subpart 2 at this time, EPA reserves the right to propose to cover future ozone nonattainment areas under title I, part D, subpart 1, in accordance with the constraints outlined in the Court's rulings. The EPA may in the future examine the appropriate role for subpart 1 in classifying nonattainment areas and in flexible, efficient, enforceable implementation of an ozone NAAQS.

Note that CAA section 182(h) (''Rural Transport Areas'') would be available for any nonattainment area that qualifies as a rural transport area under that section. A Rural Transport Area would have to only meet requirements of a marginal area.

4. Consequences of Proposed Rule

Areas originally covered under subpart 1 that have already been redesignated to attainment will not be affected by this rule, including the 13 EAC areas noted above.[11] Appendix A provides a listing of the former subpart 1 areas that are still designated nonattainment and that would be classified under subpart 2 under this proposed rule and provides the subpart 2 classification for the area based on the air quality data initially used to designate the area in the 2004 designation rule. All of these areas would be classified as either marginal or moderate.[12] The classification table of 40 CFR 51.903 provides an outside attainment date based on a number of years after the effective date of the

[6] ''* * * the gap identified in Whitman affords EPA discretion only to the extent that an area is nonattaining but its air quality is not as dangerous as the level addressed by the 1990 Amendments, which now translates to 0.09 ppm on the 8 hour scale. Thus, the gap extends only to the extent that the standard was strengthened and not to the extent that the measurement technique merely changed * * * We therefore hold that the 2004 Rule violates the Act insofar as it subjects areas with 8-hour ozone in excess of 0.09 ppm to Subpart 1. We further hold that EPA's interpretation of the Act in a manner to maximize its own discretion is unreasonable because the clear intent of Congress in enacting the 1990 Amendments was to the contrary.''

[7] We note that areas subject to subpart 2 are also subject to subpart 1 to the extent subpart 1 specifies requirements that are not superseded by more specific obligations under subpart 2.

[8] As the court made clear in its decision on rehearing, the CAA does not mandate coverage under subpart 2 of all areas designated nonattainment for an ozone NAAQS. As EPA moves forward to develop an implementation strategy for the new 2007 ozone NAAQS, we will consider whether subpart 1 alone might apply in some areas for purposes of implementing that NAAQS.

[9] Note, however, that if a State requests a reclassification from moderate to marginal and the attainment date for marginal areas has passed and the area is violating the standard, EPA would not grant the request for the reclassification.

[10] One area (Denver, CO) that was originally part of the EAC program did not successfully complete all milestones and was subsequently designated nonattainment under subpart 1. Thus, this area would be treated the same as all areas classified under subpart 1 under the original provisions of the Phase 1 Rule.

[11] *See,* e.g., 73 FR 11558 (col. 2) (March 4, 2008), together with e.g., 73 FR 1166 (col 3) (January 8, 2008).

[12] Note that Essex Co (the top of Whiteface Mtn), NY, and Door County, WI would be eligible for consideration under CAA section 182(h) as a Rural Transport Area. This is based on the 1999 definition of Metropolitan Statistical Areas; neither of the above two areas is in or adjacent to an MSA as defined by the Office of Management and Budget (OMB) in 1999 (June 30, 1999; 64 FR 35548).

nonattainment designation (3 years for marginal and 6 years for moderate). For all areas other than Denver, the effective date of designation for the 8-hour standard was June 15, 2004. Thus, marginal nonattainment areas would have a maximum statutory attainment date of June 15, 2007 and moderate areas a maximum date of June 15, 2010. Since the marginal area attainment date has passed, EPA proposes that any area that would be classified under the proposal as marginal, and that did not attain by June 15, 2007, or that does not meet the criteria for an attainment date extension under CAA section 181(a)(5)(B) and 40 CFR 51.907, would be reclassified immediately as moderate under this rule.

Areas classified marginal or moderate would be required to meet the marginal or moderate area requirements of CAA section 182(a) and/or (b). Moderate area requirements include the requirements for the marginal classification. Briefly, these requirements are depicted in Table 1:

TABLE 1

Element	Subpart 2 [a]	
	Classification	Requirement
Attainment Dates	Marginal	3 years from CAA Amendments enactment.
For all areas, attainment should occur as expeditiously as practicable, but no later than specified timeframe.		
	Moderate	6 years from CAA Amendments enactment.
Reasonable Further Progress (RFP)	Marginal	None.
	Moderate	15% VOC reduction from baseline within 6 years of enactment.
Attainment demonstration submission	Marginal	None.
	Moderate	Due 3 years after CAA Amendments enactment.
NSR and Reasonable Achievable Technology (RACT) major source applicability.	Marginal	100 tons per year (TPY).
	Moderate	100 TPY.
NSR offsets	Marginal	1.1 to 1.
	Moderate	1.15 to 1.
Bump-up to higher classification	All except severe & extreme.	Required to bump up to higher classification if area doesn't meet attainment date.
NO_X control for RACT	Moderate & above; all areas in Ozone Transport Commission.	Requirements under this subpart for major stationary VOC sources (NSR & RACT) also apply to all major NO_X sources, unless EPA approves NO_X waiver.
Emission inventory	All	Comprehensive emissions inventory within 2 years of enactment; update every 3 years (until area attains). Provision for submission to state of annual emissions statements from VOC and NO_X stationary sources.
RACT	Marginal & above	Pre-1990 RACT fix-up.
	Moderate & above	RACT for all Control Techniques Guidelines sources and all other major sources.
Inspection and Maintenance (I/M)	Marginal	Pre-1990 corrections to previously required I&M programs.
	Moderate	Basic I/M.
Consequences of failure to attain	Marginal, moderate	Bump-up for failure to attain.
Contingency measures	All	Required for failure to meet the Rate of Progress milestones or attain.

[a] Note that subpart 1 requirements also apply to subpart 2 areas to the extent that the CAA does not provide an exemption (*e.g.*, 182(a) (last paragraph, which exempts marginal areas from the requirement to submit an attainment demonstration)) or such requirements are not superseded by more specific obligations under subpart 2 (*e.g.*, where subpart 2 specifies specific increments of progress for moderate and above areas in place of the more general requirement for "reasonable further progress" under subpart 1). Subpart 1 requirements that are also applicable to subpart 2 areas (but that are not addressed in subpart 2) include reasonably available control measures (RACM) requirement and transportation and general conformity requirements.

With respect to transportation conformity requirements, current transportation plan and transportation improvement program conformity determinations for the 1997 8-hour ozone standard will remain valid, and are not impacted by this action. Areas that would be reclassified under subpart 2 are already satisfying the applicable CAA section 176(c) conformity requirements for the 1997 8-hour ozone standard. In addition, no new conformity deadline would be triggered in the subject areas after their classification under subpart 2. Nonattainment areas that are classified as marginal or moderate under Subpart 2 would continue to make future conformity determinations according to the applicable requirements of 40 CFR 93.109(d) and (e). EPA notes that any new moderate areas that continue to be required to use the interim emissions tests will be required to meet additional test requirements that do not apply to marginal areas (40 CFR 93.119(b)(1)).

The Phase 1 Rule provided that states must submit the major SIP elements for the subpart 1 areas no later than June 15, 2007. For areas classified as moderate, EPA also provided a submission date of June 15, 2007 for most requirements, but required states to submit the reasonably available control technology requirement (RACT) SIP by September 15, 2006. The EPA proposes to require states to submit all required SIP elements for the areas' marginal or moderate classification one year after the effective date of a final rule classifying the areas. The EPA believes this is an appropriate and reasonable amount of time given the attainment dates that will apply to these areas and the fact that the areas should have made significant progress toward meeting these requirements based on the obligations that applied before the

subpart 1 classification provision of the Phase 1 rule was vacated. As subpart 1 areas, these areas should have been well along the path to developing SIPs at the time the Court issued its decision in December 2006. We believe states have already had ample opportunity to complete the technical work to support development of these major SIP elements prior to now. Also, EPA has encouraged states to continue planning for clean air in the prior subpart 1 areas.[13] Therefore, EPA believes one year from the date of final rule should be sufficient time for states to submit these SIPs. However, EPA solicits comment on this aspect of the proposal.

B. Anti-Backsliding Under 1-Hour Ozone Standard—In General (Also Discussing NSR and Section 185 Penalty Fees)

The EPA codified the anti-backsliding provisions governing the transition from the revoked 1-hour ozone NAAQS to the 1997 8-hour ozone NAAQS in 40 CFR 51.905(a). These provisions, as promulgated, retained most of the 1-hour ozone requirements as ''applicable requirements'' (defined in 40 CFR 51.900(f)). The requirements that are retained are those that applied in an area based on the area's 1-hour ozone designation and classification as of the effective date of its 8-hour designation (for most areas, June 15, 2004).

Section 51.905(b) provides that a state remains subject to the listed 1-hour standard obligations until the area attains the 8-hour NAAQS. Furthermore, § 51.905(b) provides that such obligations cannot be removed from a SIP, even if the area is redesignated to attainment for the 8-hour NAAQS, but must remain in the SIP as applicable requirements or as contingency measures, as appropriate.

Section 51.905(e), as promulgated in 2004, indicated that certain 1-hour standard requirements are not part of the list of anti-backsliding requirements. These include 1-hour NSR, section 185 penalty fees, and 1-hour contingency measures for failure to attain or make reasonable progress toward attainment of the 1-hour NAAQS.[14] The Court vacated these exemption provisions, and accordingly EPA is proposing to delete these exemptions from the rule. Thus, this proposal would remove language relating to the vacated provisions of the rule that provided exemptions from the requirements of nonattainment NSR and CAA section 185 penalty fees under the 1-hour standard in addition to the provision for contingency measures. The EPA plans to issue a separate proposed rule providing further guidance on how the section 185 fee provisions and the 1-hour NSR requirements apply as a result of the Court's vacatur.[15]

In the following section, in response to the Court vacatur, EPA proposes the manner in which the 1-hour NAAQS contingency measure requirement applies as an anti-backsliding requirement.

C. Contingency Measures

1. Phase 1 Rule

The Phase 1 Rule did not address anti-backsliding provisions related to sections 172(c)(9) and 182(c)(9) of the CAA, which require nonattainment area SIPs to contain contingency measures that would be implemented if an areas fails to attain or fails to make RFP toward attainment of the 1-hour NAAQS. In the Reconsideration Rule published on May 26, 2005 (70 FR 30592), we determined that these 1-hour contingency measures would no longer be considered required SIP measures once the 1-hour standard was revoked. This meant that after the 1-hour standard was revoked, areas that had not submitted 1-hour attainment demonstrations or a specific 1-hour RFP SIP would no longer be required to submit contingency measures in conjunction with those SIPs. Also, the reconsideration rule stated that areas with approved section 172 and 182 contingency measures in the adopted SIP could submit a revision to remove them from their SIP when the 1-hour standard was revoked.

2. Effect of Court Ruling

The Court concluded that EPA improperly waived the CAA requirements for contingency measures that would apply based on the failure of an area to meet a 1-hour RFP milestone or 1-hour attainment date. The Court vacated the provision of the Phase 1 Rule that waived this requirement for areas once the 1-hour standard was revoked. Consequently, areas remain subject to the obligation to have contingency measures for failure to attain the 1-hour NAAQS or make RFP toward attainment of the 1-hour NAAQS and cannot remove section 172 or 182 contingency measures from their SIPs based on revocation of the 1-hour standard.

3. Proposed Rule

The EPA is proposing that states be required to retain contingency measures in their SIPs that would apply based on a failure to meet a 1-hour RFP milestone or upon a failure to attain the 1-hour standard by the area's attainment date. Consistent with the Court's vacatur of § 51.905(e)(2)(iii), which waived this requirement once the 1-hour standard was revoked, EPA proposes to remove this provision from the regulations. Furthermore, consistent with EPA's proposal to retain these 1-hour contingency measure requirements as anti-backsliding measures, we also propose to list contingency measures under sections 172(c)(9) and 182(c)(9) of the CAA as applicable requirements under § 51.900(f).

In situations where an area attains the 1-hour NAAQS by its applicable attainment date, the area is not subject to the requirement to implement contingency measures for failure to attain the standard by its attainment date. As a result, any area that meets or has met its attainment deadline, even if the area subsequently lapses into nonattainment, would not be required to implement the contingency measures for failure to attain the standard by its attainment date for purposes of anti-backsliding.

In situations where a 1-hour ozone nonattainment area is in attainment based on current air quality (*e.g.*, after the area's attainment date), EPA can

[13] Memorandum of March 19, 2007 from William L. Wehrum to EPA Regional Administrators, re: ''Impacts of the Court Decision on the Phase 1 Ozone Implementation Rule'' (response to Question 2) and memorandum of June 15, 2007 from Robert J. Meyers to Regional Administrators re: ''Decision of the U.S. Court of Appeals for the District of Columbia Circuit on our Petition for Rehearing of the Phase 1 Rule to Implement the 8-Hour Ozone NAAQS'' (Implications for Subpart 1 Areas).

[14] Note that if the area is nonattainment for the 1997 8-hour standard, it is subject to nonattainment NSR, contingency measures and (if severe or extreme) the section 185 penalty fee provision for that 1997 NAAQS.

[15] As noted above in a previous footnote, the Court's June 2007 clarification confirms that the December 2006 decision was not intended to establish a requirement that areas continue to demonstrate conformity under the 1-hour ozone standard for anti-backsliding purposes. Therefore, no revisions are necessary to 40 CFR 51.905(e)(3) of the Phase 1 implementation rule. Section 40 CFR 51.905(e)(3) establishes that conformity determinations for the 1-hour standard are not required beginning 1 year after the effective date of the revocation of the 1-hour standard and any state conformity provisions in an applicable SIP that require 1-hour ozone conformity determinations are no longer federally enforceable. This provision does not require revision in light of the Court's decision and clarification, because the Court did not require conformity determinations for the 1-hour standard, and existing regulations already implement the Court's holding that 8-hour ozone nonattainment and maintenance areas must use 1-hour ozone budgets to determine conformity to the 1997 8-hour standard until such time as 8-hour ozone budgets are approved or found adequate for the area. Therefore, current transportation conformity-related regulations set forth in 40 CFR part 93 and 40 CFR 51.905(e)(3), and the general conformity regulations in 40 CFR part 93 are consistent with the Court's decision and clarification on the Phase 1 8-hour ozone implementation rule and do not require revision.

propose to make a finding of attainment.[16] This finding would be pursuant to the interpretation set forth in the May 10, 1995 memorandum from John S. Seitz, Director, Office of Air Quality Planning and Standards, entitled ''Reasonable Further Progress, Attainment Demonstration, and Related Requirements for Ozone Nonattainment Areas Meeting the Ozone Ambient Air Quality Standard'' (Clean Data Policy). Under this policy, if EPA determines through rulemaking that the area is meeting the 1-hour ozone standard, the requirements for the state to submit an attainment demonstration and related components such as reasonably available control measures (RACM), RFP demonstration, contingency measures for failure to attain or make reasonable further progress and the section 185 fees program are suspended as long as the area continues to attain the 1-hour ozone NAAQS. If the area subsequently violates the ozone NAAQS, EPA would initiate notice-and-comment rulemaking to withdraw the determination of attainment, which would result in reinstatement of the requirement for the state to submit such plans.

The Tenth, Seventh and Ninth Circuits have upheld EPA rulemakings applying the Clean Data Policy. *See Sierra Club* v. *EPA,* 99 F. 3d 1551 (10th Cir. 1996); *Sierra Club* v. *EPA.* 375 F.3d 537 (7th Cir. 2004) and *Our Children's Earth Foundation* v. *EPA,* No. 04–73032 (9th Cir. June 28, 2005) memorandum opinion.[17] See also the discussion and rulemakings cited in EPA's Phase 2, 8-Hour Ozone Implementation Rulemaking, 70 FR 71644–71646 (November 29, 2005), which codified the policy for the 8-hour NAAQS.

Thus if EPA makes a determination of attainment under the Clean Data Policy, EPA would find that the requirement to submit section 172 and 182 contingency measures under the 1-hour anti-backsliding provisions (40 CFR 51.905) would be suspended for so long as the area continues to attain the 1-hour standard.

Under 40 CFR 51.905(b), states remain subject to the obligations under § 51.905(a)(1)(i) and (a)(2) until the area attains the 8-hour NAAQS for purposes of anti-backsliding. After the area attains the 8-hour NAAQS, states may request that these obligations be shifted to contingency measures, consistent with sections 110(l) and 193 of the CAA; however, the state cannot remove the obligations from the SIP.

D. Deletion of Obsolete 1-Hour Ozone Standard Provision

For the reasons stated above in the background section concerning the obsolete nature of 40 CFR 50.9(c), we are proposing to delete that paragraph. This will have no effect on the status of the 1-hour ozone standard,[18] or on the anti-backsliding provisions which set forth how areas must meet 1-hour requirements that applied to the area at the time the area was designated for the 8-hour standard.

IV. Statutory and Executive Order Reviews

A. Executive Order 12866: Regulatory Planning and Review

Under Executive Order 12866 (58 FR 51735, October 4, 1993), this action is a significant regulatory action because it raises novel legal or policy issues arising out of legal mandates. Accordingly, EPA submitted this action to the Office of Management and Budget (OMB) for review under EO 12866 and any changes made in response to OMB recommendations have been documented in the docket for this action.

B. Paperwork Reduction Act

This action does not impose any new information collection burden. This action sets forth EPA's proposed rule for addressing portions of the partial vacatur of EPA's Phase 1 rule for implementation of the 1997 8-hour ozone NAAQS. However, the Office of Management and Budget (OMB) has previously approved the information collection requirements contained in the existing Phase 1 Rule (April 30, 2004; 69 FR 23951) and the Phase 2 Rule (November 29, 2005; 70 FR 71612) regulations and has been assigned OMB Control Number 2060–0594. The OMB control numbers for EPA's regulations in 40 CFR are listed in 40 CFR part 9.

C. Regulatory Flexibility Act

The Regulatory Flexibility Act (RFA) generally requires an Agency to prepare a regulatory flexibility analysis of any regulation subject to notice and comment rulemaking requirements under the Administrative Procedures Act or any other statute unless the Agency certifies the rule will not have a significant economic impact on a substantial number of small entities. Small entities include small businesses, small organizations, and small governmental jurisdictions.

For purposes of assessing the impacts of these proposed regulations revisions on small entities, small entity is defined as: (1) A small business that is a small industrial entity as defined in the U.S. Small Business Administration (SBA) size standards. (See 13 CFR 121.); (2) A governmental jurisdiction that is a government of a city, county, town, school district or special district with a population of less than 50,000; and (3) A small organization that is any not-for-profit enterprise which is independently owned and operated and is not dominant in its field.

After considering the economic impact of these proposed revisions to the regulations on small entities, I certify that this action will not have a significant economic impact on a substantial number of small entities. This proposal will not impose any requirements on small entities.

We continue to be interested in the potential impacts of the proposed rule on small entities and welcome comments on issues related to such impacts.

D. Unfunded Mandates Reform Act

This action contains no Federal mandate under the provisions of Title II of the Unfunded Mandates Reform Act of 1995 (UMRA), 2 U.S.C. 1531–1538 for State, local, or tribal governments or the private sector. The action imposes no enforceable duty on any State, local or tribal governments or the private sector. Therefore, this action is not subject to the requirements of section 202 and 205 of the UMRA.

This action is also not subject to the requirements of section 203 of UMRA because it contains no regulatory requirements that might significantly or uniquely affect small governments. The EPA has determined that these proposed regulation revisions contain no regulatory requirements that may significantly or uniquely affect small governments, including tribal governments because these regulations affect Federal agencies only.

E. Executive Order 13132—Federalism

Executive Order 13132, entitled ''Federalism'' (64 FR 43255, August 10, 1999), requires EPA to develop an accountable process to ensure ''meaningful and timely input by state

[16] This applies even if the area did not attain by its attainment date; however, the CAA requires EPA in these cases to make a finding of failure to attain by the attainment date and either reclassify the area or apply other requirements (such as section 185) as specified for the area's classification.

[17] The Clean Data Policy, as it is embodied in 40 CFR. 51.918, is being challenged in the context of the 8-hour ozone standard in the Phase 2 Rule ozone litigation pending in the DC Circuit, *NRDC* v. *EPA,* No. 06–1045 (DC Cir.).

[18] The 1-hour standard was revoked for most areas on June 15, 2005, the date one-year after the effective date of designation. For the 13 EAC areas designated attainment with an effective date of April 15, 2008, the 1-hour standard will be revoked April 15, 2009, and for the Denver EAC area, which was designated nonattainment effective November 20, 2007, the 1-hour standard will be revoked November 20, 2008.

and local officials in the development of regulatory policies that have Federalism implications.'' Policies that have ''Federalism implications'' are defined in the Executive Order to include regulations that have ''substantial direct effects on the states, on the relationship between the national government and the states, or on the distribution of power and responsibilities among the various levels of government.''

This action does not have Federalism implications. It will not have substantial direct effects on the states, on the relationship between the national government and the states, or on the distribution of power and responsibilities among the various levels of government, as specified in Executive Order 13132. This proposed rule, if made final, would restore provisions that existed under the 1-hour ozone standard and that would have continued under the 1-hour standard had not EPA issued a revised ozone standard. Those provisions were revoked when EPA revoked the 1-hour standard itself. Although a court upheld EPA's right to revoke the 1-hour standard, the court ruled that EPA erroneously revoked several 1-hour NAAQS provisions and vacated those portion of EPA's rule. Thus, the court's own ruling restored the former 1-hour NAAQS provisions. This proposed rule merely proposes a corrective regulatory mechanism for restoring the 1-hour contingency measure provision that the court had already restored. Thus, Executive Order 13132 does not apply to these proposed regulation revisions.

In the spirit of Executive Order 13121 and consistent with EPA policy to promote communications between EPA and state and local governments, EPA is soliciting comments on this proposal from state and local officials.

F. Executive Order 13175—Consultation and Coordination With Indian Tribal Governments

This action does not have Tribal implications as specified in Executive Order 13175. They do not have a substantial direct effect on one or more Indian Tribes, since no Tribe has to develop a SIP under these proposed regulatory revisions. Furthermore, these proposed regulation revisions do not affect the relationship or distribution of power and responsibilities between the Federal government and Indian Tribes. The CAA and the Tribal Air Rule establish the relationship of the Federal government and Tribes in developing plans to attain the NAAQS, and these revisions to the regulations do nothing to modify that relationship. Thus, Executive Order 13175 does not apply.

EPA specifically solicits additional comment on the proposed revisions to the regulations from Tribal officials.

G. Executive Order 13045: Protection of Children From Environmental Health and Safety Risks

EPA interprets EO 13045 (62 FR 19885, April 23, 1997) as applying only to those regulatory actions that concern health or safety risks, such that the analysis required under section 5–501 of the EO has the potential to influence the regulation. This action is not subject to EO 13045 because these proposed rule revisions address whether a SIP will adequately attain and maintain the NAAQS and meet the obligations of the CAA. The NAAQS are promulgated to protect the health and welfare of sensitive population, including children. However, EPA solicits comments on whether the proposed action would result in an adverse environmental effect that would have a disproportionate effect on children.

H. Executive Order 13211: Actions That Significantly Affect Energy Supply, Distribution, or Use

This action is not subject to Executive Order 13211 (66 FR 28355 (May 22, 2001)), because it is not a significant regulatory action under Executive Order 12866.

I. National Technology Transfer Advancement Act

Section 12(d) of the National Technology Transfer and Advancement Act of 1995 (''NTTAA''), Public Law 104–113, 12(d) (15 U.S.C. 272 note) directs EPA to use voluntary consensus standards in its regulatory activities unless to do so would be inconsistent with applicable law or otherwise impractical. Voluntary consensus standards are technical standards (*e.g.*, materials specifications, test methods, sampling procedures, and business practices) that are developed or adopted by voluntary consensus standards bodies. NTTAA directs EPA to provide Congress, through OMB, explanations when the Agency decides not to use available and applicable voluntary consensus standards.

This proposed rulemaking does not involve technical standards. Therefore, EPA is not considering the use of any voluntary consensus standards.

J. Executive Order 12898: Federal Actions To Address Environmental Justice in Minority Populations and Low-Income Populations

Executive Order (EO) 12898 (59 FR 7629 (Feb. 16, 1994)) establishes Federal executive policy on environmental justice. Its main provision directs Federal agencies, to the greatest extent practicable and permitted by law, to make environmental justice part of their mission by identifying and addressing, as appropriate, disproportionately high and adverse human health or environmental effects of their programs, policies, and activities on minority populations and low-income populations in the United States.

EPA has determined that this proposed rule will not have disproportionately high and adverse human health or environmental effects on minority or low-income populations because it does not affect the level of protection provided to human health or the environment. The proposed revisions to the regulations would, if promulgated revise procedures for states to follow in developing SIPs to attain the NAAQS, which are designed to protect all segments of the general populations. As such, they do not adversely affect the health or safety of minority or low income populations and are designed to protect and enhance the health and safety of these and other populations.

K. Determination Under Section 307(d)

Pursuant to sections 307(d)(1)(E) and 307(d)(1)(V) of the CAA, the Administrator determines that this action is subject to the provisions of section 307(d). Section 307(d)(1)(V) provides that the provisions of section 307(d) apply to ''such other actions as the Administrator may determine.''

Appendix A to Preamble. Application of the Proposed Classification Scheme

This appendix lists the proposed new subpart 2 classifications for the areas that were originally covered under subpart 1 in the phase 1 rule (April 30, 2004) and that are currently still designated nonattainment. The geographic boundaries of these nonattainment areas are provided in 40 CFR Part 81, Subpart C.

Current nonattainment areas not classified under phase 1 rule, as vacated by the court [a]	2001–2003 8-hour ozone design value ppm	Proposed subpart 2 classification	2004–2006 8-hour ozone design value ppm	2005–2007 8-hour ozone design value ppm
Albany-Schenectady-Troy, NY [e]	0.087	Marginal	0.078	0.079
Allegan Co, MI	0.097	Moderate	0.088	0.093
Amador and Calaveras Cos (Central Mtn), CA [c]	0.091	Moderate	0.093	0.090
Buffalo-Niagara Falls, NY	0.099	Moderate	0.083	0.086
Chico, CA [e]	0.089	Marginal	0.084	0.084
Cincinnati-Hamilton, OH-KY-IN	0.096	Moderate	0.086	0.088
Clearfield & Indiana Cos, PA [e]	0.09	Marginal	0.077	0.080
Columbus, OH	0.095	Moderate	0.084	0.087
Denver-Boulder-Greeley-Ft. Collins-Love, CO [b]	0.087	Marginal	0.081	0.085
Door Co, WI [d]	0.094	Moderate	0.086	0.090
Essex Co (Whiteface Mtn), NY [d]	0.091	Marginal	NAV	NAV
Greene Co, PA [e]	0.089	Marginal	0.079	0.080
Haywood and Swain Cos (Great Smoky NP), NC [e]	0.085	Marginal	0.076	0.078
Jamestown, NY	0.094	Moderate	0.086	0.086
Kern Co (Eastern Kern), CA	0.098	Moderate	0.086	0.085
Knoxville, TN	0.092	Moderate	0.084	0.088
Las Vegas, NV [e]	0.086	Marginal	0.083	0.086
Manitowoc Co, WI [e]	0.09	Marginal	0.082	0.086
Mariposa and Tuolumne Cos (Southern Mtn),CA [c]	0.091	Moderate	0.086	0.085
Nevada Co. (Western Part), CA	0.098	Moderate	0.096	0.095
Phoenix-Mesa, AZ [e]	0.087	Marginal	0.083	0.083
Pittsburgh-Beaver Valley, PA	0.094	Moderate	0.083	0.087
Rochester, NY [e]	0.088	Marginal	0.072	0.080
San Diego, CA	0.093	Moderate	0.088	0.089
Sutter Co (Sutter Buttes), CA [e]	0.088	Marginal	0.082	0.081

[a] A number of areas that were placed in Subpart 1 under the vacated portion of the Phase 1 Rule have since attained the 8-hour ozone standard and have been redesignated to attainment. Because these areas are now designated attainment for the ozone standard, they are not nonattainment areas subject to classification and thus are not included in this table.

[b] Denver originally participated in the Early Action Compact (EAC) program and was listed in the April 30, 2004 designation action as a nonattainment area under subpart 1; its nonattainment designation was deferred until November 20, 2007, at which time based on a violation of the 1997 8-hour ozone NAAQS, Denver's nonattainment designation became effective. Denver has planning requirements as a former EAC area.

[c] Area would have been marginal but did not have attaining design values by the marginal area attainment date (June 15, 2007) (based on 2004-2006 design values).

[d] Essex Co (the top of Whiteface Mtn), NY, and Door County, WI, would be eligible for consideration under CAA section 182(h) as Rural Transport Areas. This is based on the 1999 definition of Metropolitan Statistical Areas; neither of the above two areas is in or adjacent to an MSA as defined by the Office of Management and Budget (OMB) in 1999 (June 30, 1999; 64 FR 35548). Essex Co does not have a design value for the 2005-2007 period (indicated by NAV (not available)).

[e] These areas had attaining design values as of the marginal area attainment date (June 15, 2007) (based on 2004–2006 design values).

List of Subjects

40 CFR Part 50

Environmental protection, Air pollution control, Carbon monoxide, Lead, Nitrogen dioxide, Ozone, Particulate matter, Sulfur oxides.

40 CFR Part 51

Air pollution control, Intergovernmental relations, Ozone, Particulate matter, Transportation, Volatile organic compounds.

Authority: 42 U.S.C. 7409; 42 U.S.C. 7410; 42 U.S.C. 7511–7511f; 42 U.S.C. 7601(a)(1).

Dated: January 9, 2009.

Stephen L. Johnson,

Administrator.

For the reasons stated in the preamble, title 40, chapter I of the Code of Federal Regulations is proposed to be amended as follows:

PART 50—NATIONAL PRIMARY AND SECONDARY AMBIENT AIR QUALITY STANDARDS

1. The authority citation for part 50 continues to read as follows:

Authority: 42 U.S.C. 7401, *et seq.*

§ 50.9 [Amended]

2. Section 50.9 is amended by removing and reserving paragraph (c).

PART 51—REQUIREMENTS FOR PREPARATION, ADOPTION, AND SUBMITTAL OF IMPLEMENTATION PLANS

3. The authority citation for part 51 continues to read as follows:

Authority: 23 U.S.C. 101; 42 U.S.C. 7401–7671q.

Subpart X—[Amended]

4. Section 51.900 is amended by adding paragraph (f)(14) to read as follows:

§ 51.900 Definitions.

* * * * *

(f) * * *

(14) Contingency measures under CAA sections 172(c)(9) and 182(c)(9) that would be triggered based on a failure to attain the 1-hour NAAQS by the applicable attainment date or to make reasonable further progress toward attainment of the 1-hour NAAQS.

* * * * *

5. Section 51.902 is revised to read as follows:

§ 51.902 Which classification and nonattainment area planning provisions of the CAA shall apply to areas designated nonattainment for the 8-hour NAAQS?

(a) An area designated nonattainment for the 8-hour NAAQS will be classified in accordance with section 181 of the CAA, as interpreted in § 51.903(a), for purposes of the 8-hour NAAQS, and will be subject to the requirements of subpart 2 that apply for that classification.

(b) [Reserved]

6. Section 51.905 is amended as follows:

a. By adding a sentence to the end of paragraph (b).

b. By removing and reserving paragraphs (e)(2)(ii) and (e)(2)(iii).

c. By removing paragraph (e)(4).

§ 51.905 How do areas transition from the 1-hour NAAQS to the 8-hour NAAQS and what are the anti-backsliding provisions?

* * * * *

(b) * * * Once an area attains the 1-hour NAAQS, the section 172 and 182 contingency measures under the 1-hour NAAQS can be shifted to contingency measures for the 8-hour ozone NAAQS and must remain in the SIP until the area is redesignated to attainment for the 8-hour NAAQS.

* * * * *

[FR Doc. E9–806 Filed 1–15–09; 8:45 am]

BILLING CODE 6560–50–P

ENVIRONMENTAL PROTECTION AGENCY

40 CFR Part 52

[EPA–R02–OAR–2008–0497, FRL–8763–4]

Approval and Promulgation of Implementation Plans; New Jersey Reasonable Further Progress Plans, Reasonably Available Control Technology, Reasonably Available Control Measures and Conformity Budgets

AGENCY: Environmental Protection Agency (EPA).

ACTION: Proposed rule.

SUMMARY: The Environmental Protection Agency (EPA) is proposing action on portions of two State Implementation Plan revisions submitted by New Jersey that are intended to meet several Clean Air Act (Act) requirements for attaining the 0.08 part per million (ppm) 8-hour ozone national ambient air quality standards. EPA is proposing approval of: The 2008 reasonable further progress plan and associated 2008 ozone projection year emission inventories, contingency measures for the 2008 reasonable further progress plan, 2008 conformity budgets used for planning purposes, and the reasonably available control measure analysis. In addition, EPA is proposing a conditional approval of New Jersey's efforts to meet the reasonably available control technology requirement. The intended effect of this action is to approve those programs that meet Act requirements and to further achieve emission reductions that will be critical to attainment of the national ambient air quality standard for ozone in New Jersey's two nonattainment areas.

DATES: Comments must be received on or before February 17, 2009.

ADDRESSES: Submit your comments, identified by Docket Number EPA–R02–OAR–2008–0497, by one of the following methods:

- *http://www.regulations.gov*: Follow the on-line instructions for submitting comments.
- *E-mail: Werner.Raymond@epa.gov.*
- *Fax:* 212–637–3901
- *Mail:* Raymond Werner, Chief, Air Programs Branch, Environmental Protection Agency, Region 2 Office, 290 Broadway, 25th Floor, New York, New York 10007–1866.
- *Hand Delivery:* Raymond Werner, Chief, Air Programs Branch, Environmental Protection Agency, Region 2 Office, 290 Broadway, 25th Floor, New York, New York 10007–1866. Such deliveries are only accepted during the Regional Office's normal hours of operation. The Regional Office's official hours of business are Monday through Friday, 8:30 to 4:30 excluding Federal holidays.

Instructions: Direct your comments to Docket No. EPA–R02–OAR–2008–0497. EPA's policy is that all comments received will be included in the public docket without change and may be made available online at *http://www.regulations.gov*, including any personal information provided, unless the comment includes information claimed to be Confidential Business Information (CBI) or other information whose disclosure is restricted by statute. Do not submit information that you consider to be CBI or otherwise protected through *http://www.regulations.gov* or e-mail. The *http://www.regulations.gov* Web site is an ''anonymous access'' system, which means EPA will not know your identity or contact information unless you provide it in the body of your comment. If you send an e-mail comment directly to EPA without going through *http://www.regulations.gov* your e-mail address will be automatically captured and included as part of the comment that is placed in the public docket and made available on the Internet. If you submit an electronic comment, EPA recommends that you include your name and other contact information in the body of your comment and with any disk or CD–ROM you submit. If EPA cannot read your comment due to technical difficulties and cannot contact you for clarification, EPA may not be able to consider your comment. Electronic files should avoid the use of special characters or any form of encryption, and be free of any defects or viruses. For additional information about EPA's public docket visit the EPA Docket Center homepage at *http://www.epa.gov/epahome/dockets.htm.*

Docket: All documents in the docket are listed in the *http://www.regulations.gov* index. Although listed in the index, some information is not publicly available, *e.g.*, CBI or other information whose disclosure is restricted by statute. Certain other material, such as copyrighted material, will be publicly available only in hard copy. Publicly available docket materials are available either electronically in *http://www.regulations.gov* or in hard copy at the Environmental Protection Agency, Region II Office, Air Programs Branch, 290 Broadway, 25th Floor, New York, New York 10007–1866. EPA requests, if at all possible, that you contact the individual listed in the **FOR FURTHER INFORMATION CONTACT** section to view the hard copy of the docket. You may view the hard copy of the docket Monday through Friday, 8 a.m. to 4 p.m., excluding Federal holidays.

FOR FURTHER INFORMATION CONTACT: Raymond Forde (*forde.raymond@epa.gov*) concerning emission inventories and reasonable further progress and Paul Truchan (*truchan.paul@epa.gov*) concerning other portions of the SIP revision, Air Programs Branch, Environmental Protection Agency, 290 Broadway, 25th Floor, New York, New York 10007–1866, (212) 637–4249.

SUPPLEMENTARY INFORMATION:

Table of Contents

I. What Action Is EPA Proposing?
II. Background Information
A. What Are the Act Requirements for a Moderate 8-Hr Ozone Nonattainment Area?
1. History and Time Frame for the State's Attainment Demonstration SIP
2. Moderate Area Requirements
III. What Was Included in New Jersey's SIP Submittals?
IV. EPA's Review and Technical Information
A. Emission Inventories
1. What Are the Act Requirements?
2. What Emission Inventories Were Included in the SIP?
3. What Is EPA's Evaluation?
B. Reasonable Further Progress Plans
1. What are the Act Requirements?
2. What Reasonable Further Progress Plans Were Included in the SIP?
3. What Is EPA's Evaluation?
C. Contingency Measures
1. What Are the Act Requirements?
2. What Contingency Measures Were Included in the SIP?
3. What Is EPA's Evaluation?
D. RACT for Stationary Sources
1. What Are the Act Requirements?
2. How Did New Jersey Perform Its RACT Analysis?
3. What Were the Results of New Jersey's Analysis of RACT for Stationary Sources?
4. What Is EPA's Evaluation?

E. RACM Analysis
1. What Are the Act Requirements?
2. How Did the State Perform the RACM Analysis?
3. What Were the Results of the RACM Analysis?
4. What Is EPA's Evaluation?
F. Conformity Budgets
1. What Are the Act Requirements?
2. What Conformity Budgets Were Included in the SIP?
3. What Is EPA's Evaluation?
V. What Are EPA's Conclusions?
VI. Statutory and Executive Order Reviews

I. What Action Is EPA Proposing?

The Environmental Protection Agency (EPA) has reviewed elements of New Jersey's comprehensive State Implementation Plan (SIP) revision for the 0.08 ppm 8-hour ozone national ambient air quality standards (NAAQS or standard) [1] along with other related Clean Air Act (Act) requirements necessary to ensure attainment of the standard. The EPA is proposing approval of: the 2008 reasonable further progress plan and associated 2008 ozone projection emission inventories, contingency measures for the 2008 reasonable further progress plan, 2008 conformity budgets used for planning purposes, and the reasonably available control measure analysis, because the State of New Jersey's Department of Environmental Protection (NJDEP) has fully addressed the Act's requirements. In addition, while EPA commends New Jersey for its excellent effort to meet the reasonably available control technology (RACT) requirement, EPA is unable to fully approve the State's RACT SIP revision because portions of the submission are deficient. Because the State has committed to correct the deficiencies by April 1, 2009, which is no more than one year from our anticipated final action on the SIP, we are proposing to conditionally approve this component of the SIP submittal. At this time, EPA is continuing to review the other components of the New Jersey submission and plans to address those other components of the SIP submittal in one or more separate proposed actions in the near future.

EPA's analysis and findings are discussed in this proposed rulemaking and a more detailed discussion is contained in the Technical Support Document for this Proposal which is available on line at *http://www.regulations.gov*, Docket number EPA–R02–OAR–2008–0497.

[1] Unless otherwise specifically noted in the action, references to the 8-hour ozone standard are to the 0.08 ppm ozone standard promulgated in 1997.

II. Background Information

A. What Are the Act Requirements for a Moderate 8-Hr Ozone Nonattainment Area?

1. History and Time Frame for the State's Attainment Demonstration SIP

In 1997, EPA revised the health-based NAAQS for ozone, setting it at 0.08 parts per million (ppm) averaged over an 8-hour time frame. EPA set the 8-hour ozone standard based on scientific evidence demonstrating that ozone causes adverse health effects at lower ozone concentrations and over longer periods of time than was understood when the pre-existing 1-hour ozone standard was set. EPA determined that the 8-hour standard would be more protective of human health, especially with regard to children and adults who are active outdoors, and individuals with a pre-existing respiratory disease, such as asthma.

On April 30, 2004 (69 FR 23951), EPA finalized its attainment/nonattainment designations for areas across the country with respect to the 8-hour ozone standard. These actions became effective on June 15, 2004. The entire state of New Jersey is located in two multi-state 8-hour ozone moderate nonattainment areas, the New York-Northern New Jersey-Long Island, NY-NJ-CT nonattainment area, and the Philadelphia-Wilmington-Atlantic City, PA-NJ-MD-DE nonattainment area. The New Jersey portion of the New York-Northern New Jersey-Long Island, NY-NJ-CT nonattainment area consists of the following New Jersey counties: Bergen, Essex, Hudson, Hunterdon, Middlesex, Morris, Monmouth, Passaic, Somerset, Sussex, Union and Warren and will be referred to as the Northern New Jersey Counties. The New Jersey portion of the Philadelphia-Wilmington-Atlantic City, PA-NJ-MD-DE nonattainment area consists of the following New Jersey counties: Atlantic, Burlington, Camden, Cape May, Cumberland, Gloucester, Ocean, Mercer and Salem and will be referred to as the Southern New Jersey Counties.

These designations triggered the Act's requirements under section 182(b) for moderate nonattainment areas, including a requirement to submit an attainment demonstration. EPA's Phase 1 8-hour ozone implementation rule, published on April 30, 2004 (69 FR 23951) (Phase 1 Rule) specifies that states must submit attainment demonstrations for their nonattainment areas to the EPA by no later than three years from the effective date of designation, that is, by June 15, 2007.

2. Moderate Area Requirements

On November 9, 2005, EPA published Phase 2 of the 8-hour ozone implementation rule (70 FR 71612) (Phase 2 Rule) in which it addresses the control obligations that apply to areas designated nonattainment for the 8-hour NAAQS. Among other things, the Phase 1 and Phase 2 Rules outline the SIP requirements and deadlines for various requirements in areas designated as moderate nonattainment. For such areas, reasonably available control technology plans were due by September 2006 (40 CFR 51.912(a)(2)). The rules further require that modeling and attainment demonstrations, reasonable further progress plans, reasonably available control measures, projection year emission inventories, motor vehicle emissions budgets and contingency measures were all due by June 15, 2007 (40 CFR 51.908(a), and (c)).

III. What Was Included in New Jersey's SIP Submittals?

After completing the appropriate public notice and comment procedures, New Jersey made a series of submittals in order to address the Act's 8-hour ozone attainment requirements described in Section II.A.2. On August 1, 2007, New Jersey submitted its RACT rules, which included a determination that many of the RACT rules currently contained in its SIP meet the RACT obligation for the 8-hour standard, and also included commitments to adopt revisions to several regulations where the State identified more stringent emission limitations that it believed should now be considered RACT. On October 29, 2007, New Jersey submitted a comprehensive 8-hour ozone SIP for the New Jersey portions of the New York-Northern New Jersey-Long Island, NY-NJ-CT and the Philadelphia-Wilmington-Atlantic City, PA-NJ-MD-DE nonattainment areas. It included attainment demonstrations, reasonable further progress (RFP) plans for 2008 and 2009, reasonably available control measures analyses for both areas, contingency measures, on-road motor vehicle emission budgets, and general conformity emission budgets for McGuire Air Force Base and Lakehurst Naval Air Station. These SIP revisions were subject to notice and comment by the public and the State addressed the comments received on the proposed SIPs before adopting the plans and submitting them for EPA review and approval into the SIP. Finally, as part of the RACT evaluation, on December 14, 2007, New Jersey submitted to EPA an assessment of how it planned to address

EPA's recently revised Control Technique Guidelines (CTGs).

IV. EPA's Review and Technical Information

A. Emission Inventories

1. What Are the Act Requirements?

An emissions inventory is a comprehensive, accurate, current inventory of actual emissions from all sources and is required by section 172(c)(3) of the Act. For ozone nonattainment areas, the emissions inventory must contain volatile organic compounds (VOC) and nitrogen oxides (NO_X) emissions because these pollutants are precursors to ozone formation.

2. What Emission Inventories Were Included in the SIP?

a. 2002 Base Year

New Jersey submitted its proposed 2002 Base Year emission inventories on February 21, 2006 and final 2002 Base Year emission inventories on May 18, 2006. EPA proposed to approve New Jersey's 2002 Base Year inventories on May 9, 2006 (71 FR 26895) and approved the emission inventories on July 10, 2006 (71 FR 38770). The reader is referred to these rulemakings for additional information concerning the emission inventories and EPA's approval. A summary of the 2002 base year emission inventory is included in Tables 1 and 2 of this action.

b. Projection Years

The 2002 VOC and NO_X anthropogenic emissions are projected to 2008 and 2009 in order to determine the VOC and NO_X reductions needed for the rate of progress plans and for the attainment demonstrations. The 2008 and 2009 projection year emission inventories are calculated by adjusting the 2002 base year inventory using factors that estimate growth from 2002 to 2008 and 2009. EPA requires specific growth factors be considered for each source type in the inventory since sources typically change at different rates. The 2008 and 2009 inventories were also adjusted by the State to reflect the benefits of control measures that were adopted since the 2002 emission inventory and those that are expected to be adopted. Tables 1 and 2 show 2008 and 2009 VOC and NO_X projection emission inventories after applying the appropriate growth indicators/methodologies to the 2002 base year emission inventory for New Jersey's portion of each ozone nonattainment area and to the expected controls.

TABLE 1—NORTHERN NEW JERSEY COUNTIES 2002 BASE YEAR, 2008 AND 2009 PROJECTION YEAR EMISSION INVENTORIES

	Ozone season VOC and NO_X emissions (in tons/day)					
	2002 Base year actual inventory		2008 Projection year inventory controlled		2009 Projection year inventory controlled	
	VOC	NO_X	VOC	NO_X	VOC	NO_X
Point	68.2	152.7	50.5	51.3	48.9	53.8
Area	243.5	24.4	218.7	21.8	210.8	22
Non-Road Mobile	121.6	161	87.9	120.9	82.2	117.2
On-Road Mobile	183	378.9	85.3	143.6	79	133.5
Total	616.3	717	442.4	337.6	420.9	326.5

TABLE 2—SOUTHERN NEW JERSEY COUNTIES 2002 BASE YEAR, 2008 AND 2009 PROJECTION YEAR EMISSION INVENTORIES

	Ozone season VOC and NO_X emissions (in tons/day)					
	2002 Base year actual inventory		2008 Projection year inventory controlled		2009 Projection year inventory controlled	
	VOC	NO_X	VOC	NO_X	VOC	NO_X
Point	45.4	127.7	28	17.5	26	25.9
Area	126.4	11.5	114.8	10.5	110.3	10.6
Non-Road Mobile	99	70.6	80.1	63.18	76.2	62.13
On-Road Mobile	91.8	179.8	48.8	111.3	45.4	105.9
Total	362.6	389.6	271.7	202.48	257.9	204.53

3. What Is EPA's Evaluation?

Based on EPA review, the 2008 and 2009 inventories are determined to be complete and consistent with EPA guidance. A more detailed discussion of how the emission inventories were reviewed and the results of these reviews is provided in the Technical Support Document for this action. Since the 2009 emission inventory is an integral part of the attainment demonstration which EPA is not acting on at this time, EPA is deferring action on the 2009 emission inventory. EPA will act on the 2009 projection year emission inventory when it acts on the attainment demonstration. EPA is proposing to approve the 2008 projection year emission inventories as the State used them in developing the RFP Plans.

B. Reasonable Further Progress Plans

1. What Are the Act Requirements?

Section 182(b)(1) of the Act and EPA's 8-hour ozone implementation rule (40 CFR 51.910) require each 8-hour ozone

nonattainment area designated moderate and above to submit an emissions inventory and RFP Plan, for review and approval into its SIP, that describes how the area will achieve actual emissions reductions of VOC and NO_X from a baseline emissions inventory.

The process for determining the emissions baseline from which the RFP reductions are calculated is described in section 182(b)(1) of the Act and 40 CFR 51.910. This baseline value has been determined to be the 2002 adjusted base year inventory. Sections 182(b)(1)(B) and (D) require the exclusion from the base year inventory of emissions benefits resulting from the Federal Motor Vehicle Control Program (FMVCP) regulations promulgated by January 1, 1990, and the Reid Vapor Pressure (RVP) regulations promulgated June 11, 1990 (55 FR 23666). The FMVCP and RVP emissions reductions are determined by the State using EPA's on-road mobile source emissions modeling software, MOBILE6. The FMVCP and RVP emission reductions are then removed from the base year inventory by the State, resulting in an adjusted base year inventory. The emission reductions needed to satisfy the RFP requirement are then calculated from the adjusted base year inventory. These reductions are then subtracted from the adjusted base year inventory to establish the emissions target for the RFP milestone year (2008).

For moderate areas like New Jersey's, the Act specifies a 15 percent reduction in ozone precursor emissions over an initial six year period. In the Phase 2 Rule, EPA interpreted this requirement for areas that were also designated nonattainment and classified as moderate or higher for the 1-hour ozone standard. In the Phase 2 Rule, EPA provided that an area classified as moderate or higher that has the same boundaries as an area, or is entirely composed of several areas or portions of areas, for which EPA fully approved a 15 percent plan for the 1-hour NAAQS, is considered to have met the requirements of section 182(b)(1) of the Act for the 8-hour NAAQS. In this situation, a moderate nonattainment area is subject to RFP under section 172(c)(2) of the Act and shall submit, no later than 3 years after designation for the 8-hour NAAQS, a SIP revision that meets the requirements of 40 CFR 51.910(b)(2). The RFP SIP must provide for a 15 percent emission reduction (either NO_X and/or VOC) accounting for any growth that occurs during the six year period following the baseline emissions inventory year, that is, 2002–2008. The section 182 and 172 requirements differ in that section 182(b)(1) specifies that it must be a 15 percent VOC reduction where section 172(c)(2) provides that the 15 percent reduction can be either a VOC and/or NO_X reduction.

2. What Reasonable Further Progress Plans Were Included in the SIP?

New Jersey followed EPA's requirements and guidance in calculating the ''adjusted baseline inventory,'' 2008 target level emissions and the RFP emission reductions. The total emission reductions required to meet the 2008 target level in the Northern and Southern New Jersey Counties are 96.65 tons per day (tpd) and 59.96 tpd, respectively. New Jersey's RFP Plans for the Northern and Southern New Jersey Counties are summarized in Table 3. Based on Table 3, New Jersey's VOC control plan for the Northern and Southern New Jersey Counties meets the 15 percent reduction requirements and, in addition, results in a 70.15 tpd reduction surplus in the Northern New Jersey Counties and a 30.64 tpd reduction surplus in the Southern New Jersey Counties.

TABLE 3—VOC MEASURES INCLUDED IN THE NEW JERSEY 2008 RFP PLAN

VOC control measures	Northern NJ counties (tons per day)	Southern NJ counties (tons per day)
Required Reduction In VOC To Meet 2008 Milestone	96.65	59.96
Non-Road Mobile Source:		
Portable Fuel Containers 2005	1	.4
Non-road Mobile Federal Control Measures	45	24.3
On-Road Mobile Source:		
Stage II (Gasoline Transfer Operations)	1.3	.8
Onboard Diagnostic (OBD) I/M	2.9	1.6
Total Federal Control Measures Benefits In Mobile Model	82.5	48.0
Stationary Area Source:		
Autobody (Mobile Equipment Repair and Refinishing)	1.5	.5
Solvent Cleaning (Degreasing)	2.4	.8
Consumer Products 2005	3.6	0
Portable Fuel Containers (2005 and 2009)	2.6	0.6
Stage I (Gasoline Transfer Operations-Balanced Submerged Filling)	5.9	2.9
Total VOC Benefits From All Sources	148.7	79.9
Reduction Surplus	52.05	19.94

3. What Is EPA's Evaluation?

New Jersey determined the required emission reductions for its RFP plan consistent with the Act, as interpreted in EPA's regulations, guidance and policies. All the measures included in the New Jersey RFP Plans have been adopted. New Jersey also generated a significant amount of NO_X reductions that could be used for RFP. The emission reduction benefits from certain measures have been divided between the RFP and the contingency measure requirements, but are not being double counted. Even without these measures, the RFP plans contain sufficient emission reductions to satisfy the RFP requirement, therefore EPA is proposing to approve the RFP Plans.

C. Contingency Measures

1. What Are the Act Requirements?

For ozone nonattainment areas classified as moderate or above, states must include in their submittal contingency measures to be

implemented if the area fails to make RFP or to attain the NAAQS by the applicable attainment date (sections 172(c)(9) and 182(c)(9)). Contingency measures are additional controls to be implemented in the event the area fails to meet an RFP or attainment milestone. They are intended to achieve reductions over and beyond those relied on in the RFP and attainment demonstrations. The Act does not preclude a state from implementing such measures before they are triggered. EPA interprets the Act to require sufficient contingency measures in the submittal, so that upon implementation of such measures, additional emissions reductions of up to three percent of the adjusted base year inventory (or a lesser percentage that will make up for the identified shortfall) would be achieved in the year after the failure has been identified. For more information on contingency measures please see the April 16, 1992 General Preamble (57 FR 13512) and the November 29, 2005 Phase 2 8-hour ozone implementation rule (70 FR 71612).

2. What Contingency Measures Were Included in the SIP?

The New Jersey SIP includes the control measures that will provide additional emission reductions should the State not achieve the 15 percent RFP target in 2008 and/or attainment in 2010. The 2010 contingency measures are not included in the attainment demonstration, but since EPA is not acting on the attainment demonstration in this action, EPA is deferring action on the contingency measures for attainment. EPA will act on these measures when it acts on the attainment demonstration.

Based on the 3 percent reduction needed for RFP contingency, and using only VOC emission reductions in 2008, New Jersey calculated it would need 18.1 tpd of VOC emission reduction in the Northern New Jersey Counties and 10.7 tpd of VOC emission reduction in the Southern New Jersey Counties should New Jersey fail to meet RFP. The measures and associated emission reductions are identified in Table 4 and the emission reductions are not relied on in the RFP or in the attainment demonstration.

TABLE 4—VOC REDUCTIONS FOR REASONABLE FURTHER PROGRESS CONTINGENCY MEASURES FOR 2008

[Ozone season tons per day]

	VOC (TPD)
Northern New Jersey Counties	
Contingency Requirement: 3 percent VOC	18.1
Control Measures:	
Architectural Coatings 2005	15
Consumer Products 2005	3.1
Reductions allocated to RFP contingency	18.1
Southern New Jersey Counties	
Contingency Requirement: 3 percent VOC	10.7
Control Measures:	
Architectural Coatings 2005	7
Consumer Products 2005	3
Portable Fuel Containers 2005 and 2009	0.7
Reductions allocated to RFP contingency	10.7

3. What Is EPA's Evaluation?

New Jersey determined the required emission reductions for its RFP contingency plans consistent with the Act, as interpreted in EPA's regulations, guidance and policies and identified the specific measures needed to achieve them. All the emission reductions included in the RFP contingency plans are from adopted measures. EPA is proposing to approve the State's RFP contingency plans.

D. RACT for Stationary Sources

1. What Are the Act Requirements?

Sections 172(c)(1), 182(b)(2) and 182(f) of the Act require nonattainment areas that are designated as moderate or above for ozone to adopt RACT. All of New Jersey is subject to this requirement since all counties in the State are located in either of two nonattainment areas that are classified as moderate ozone nonattainment areas for the 8-hour NAAQS for ozone (40 CFR 81.331). In accordance with section 182(b), New Jersey must, at a minimum, adopt RACT level controls for sources covered by a Control Techniques Guidelines (CTG) document and for any major non-CTG sources.

Section IV.G of EPA's Phase 2 Rule discusses the RACT requirements. It states, in part, that where a RACT SIP is required, SIPs implementing the 8-hour standard generally must assure that RACT is met, either through a certification that previously required RACT controls represent RACT for 8-hour implementation purposes or, where necessary, through a new RACT determination. The majority of counties in New Jersey were previously classified under the 1-hour ozone NAAQS as severe, while the remaining counties were subject to RACT as part of the Ozone Transport Region. New Jersey chose a uniform applicability level for RACT based on the severe classification which resulted in a statewide requirement for major sources to be defined as those having emissions of 25 tons per year or more for both VOC and NO_X. In areas classified as moderate, the definition for major sources in New Jersey would have been 50 tons per year for VOC and 100 tons per year for NO_X. However, New Jersey chose to retain the original 1-hour ozone limits statewide in New Jersey for purposes of the RACT analysis resulting in a more stringent evaluation of RACT. New Jersey's use of 25 tons per year for RACT is consistent with court decision concerning anti-backsliding. See *South Coast Air Quality Management Dist. (SCAQMD)* v. *EPA*, 472 F.3d 882 (D.C. Cir. 2006).

2. How Did New Jersey Perform Its RACT Analysis?

New Jersey combined the results of three separate information gathering efforts from industry, environmental groups and the general public in order

to get the greatest input on the stringency of the existing requirements and the possibility of new RACT controls. The first effort was the exchange of information and experience through a public forum entitled, ''*Reducing Air Pollution Together*'' (a multi-pollutant effort), the second was through state participation in regional control development efforts, and the third was an internal NJDEP assessment of RACT controls. The internal assessment also included a review of EPA's 56 CTGs and Alternative Control Techniques (ACTs) where the CTG's and ACT's level of control and applicability were compared to New Jersey's regulations. The results of these three efforts were consolidated and presented to the NJDEP Air Quality Management team for its consideration. The Air Quality Management team then discussed and prioritized the recommendations resulting in a list of approximately 60 potential control measures for further evaluation. The NJDEP's engineers and scientists were assigned the task of further investigating and writing white papers for each potential control measure. Each control measure was evaluated based on information collected regarding emission benefits, implementation issues, cost-effectiveness, and existing controls.

The white papers were then made available to the public for its review and comment and the evaluated control measures were added to the other recommended control measures for further evaluation. New Jersey's RACT evaluation, ''Reasonably Available Control Technology (RACT) for the 8-Hour Ozone National Ambient Air Quality Standard (NAAQS) and other Associated State Implementation Plan (SIP) Revisions for the Fine Particulate Matter National Ambient Air Quality Standard (NAAQS), Regional Haze, and the Clean Air Act Requirements on Transport of Air Pollution'' dated August 1, 2007, addressed approximately 115 source categories covering multiple pollutants, as well as New Jersey's commitments to adopt more stringent controls for the 8-hour ozone, PM2.5 and Regional Haze SIPs and was the subject of a public hearing.

3. What Were the Results of New Jersey's Analysis of RACT for Stationary Sources?

a. CTGs and ACTs

New Jersey has implemented RACT controls statewide for the 56 CTGs and ACTs that EPA has issued to meet the requirements of the Act. These RACT controls were promulgated in the New Jersey Administrative Code, Title 7: Chapter 27, Air Pollution Control in:

—Subchapter 16, ''Control and Prohibition of Air Pollution by Volatile Organic Compounds,''
—Subchapter 19, ''Control and Prohibition of Air Pollution from Oxides of Nitrogen,'' and
—Subchapter 23, ''Prevention of Air Pollution From Architectural Coatings.''

The New Jersey RACT SIP contains a table (see Table 4—RACT Determinations Based on Existing USEPA Guidance) listing all the CTG and ACT categories (56 categories in total) and the corresponding Subchapter and section which address the requirements. These have all been approved by EPA and made part of the SIP.

For many source categories, the existing New Jersey rules go beyond the recommendations contained in the CTG/ACT documents in terms of more stringent emission rates and lower thresholds of applicability. New Jersey identified several categories where controls may be more stringent and these are included in Section D.3.d. below. Based on the August 1, 2007 RACT evaluation, New Jersey's existing RACT rules for the remaining CTG and ACT categories met the RACT requirement for the 8-hour ozone NAAQS implementation purposes.

b. Negative Declaration

By comparing the sources covered in the existing CTGs and ACTs with New Jersey's adopted rules, and searching the New Jersey Environmental Management System permitting and emission inventory databases, and emission statements for source categories by Standard Industrial Code (SIC), New Jersey determined that for the following CTGs and ACTs, either no sources exist in New Jersey, or the sources fall below the CTG/ACT applicability thresholds:

(1) Surface Coating of Automobiles and Light-Duty Trucks;
(2) Manufacture of Vegetable Oils;
(3) Manufacture of Pneumatic Rubber Tires;
(4) Aerospace Coatings;
(5) Iron and Steel Mills;
(6) Cement Manufacturing;
(7) Nitric and Adipic Manufacturing Plants;
(8) Flat Wood Paneling Coatings; and
(9) Shipbuilding and Ship Repair Operations.

New Jersey will review all new CTGs issued by EPA since the preparation of this SIP revision and adopt provisions to address any new requirements for those categories for which sources exist in the State. This includes those covered by the present negative declaration.

c. Facility-Specific Emission Limits and Alternative Emission Limits

The requirement to review and update 1-hour ozone RACT SIP limits also applies to any uniquely determined RACT limits for major stationary sources that are located in nonattainment areas. In New Jersey, uniquely determined RACT limits may result from two situations: Where major sources are not regulated by a CTG but are still required to have controls based on its size and on a requirement to perform a case-by-case determination (facility specific emission limit (FSEL)), or where the facility could not reasonably meet the RACT limit because of site specific factors and applied for an alternative emission limit (AEL). In both cases the limits are adopted by the State and approved into the SIP.

As part of the 8-hr ozone RACT determination, New Jersey is including new source categories required to have RACT and tightening emission limits for some source categories that would be applicable to all sources, including some which had a FSEL or AEL. At the same time, New Jersey is requiring all facilities that were previously granted FSELs or AELs to now comply with the new emission requirements were applicable, or obtain a new FSEL if the source category still has no specific RACT limits in the rule. Should any facility not be able to meet the new rule requirements, it could apply for a new AEL that would be based on the facilities abilities to comply with current technology and the present cost of those controls.

d. Source Categories Identified for Further Control

The results of NJDEP's assessment of RACT for the CTG and ACT categories, non-CTG major sources regulated by the State, as well as categories identified by the regional and local workgroups are identified in Table 5. Table 5 lists the RACT source categories for which the State will propose new or revised emission standards along with the targeted pollutants and affected rules and categories which will be the subject of future rule revisions.

TABLE 5—SUMMARY OF NEW JERSEY CANDIDATE SOURCE CATEGORIES AND FUTURE RULE REVISIONS

Candidate source categories	Targeted pollutants				Affected rules
	NO_X	VOC	SO_2	$PM_{2.5}$	
Ozone Transport Commission (OTC)					
Asphalt Paving	.....	X	.....	.....	N.J.A.C.[1] 7:27–16.19.
Asphalt Production	X	.....	.....	.....	N.J.A.C. 7:27–19.9.
Glass Furnaces	X	.....	.....	.....	N.J.A.C. 7:27–19.2, 19.10.
Industrial Adhesives & Sealants	.....	X	.....	.....	N.J.A.C. 7:27–26 (New Rule).
Industrial, Commercial & Institutional Boilers	X	.....	.....	.....	N.J.A.C. 7:27–19.2, 19.7.
Coal-fired EGU[2] Boilers	X	.....	X	X	N.J.A.C. 7:27–4, 10 & 19.4.
EGUs	X	.....	.....	.....	N.J.A.C. 7:27–19.4.
High Electrical Demand Day EGUs	X	.....	.....	.....	N.J.A.C. 7:27–19.4, 19.5, & 19.29.
Mid-Atlantic Regional Air Management Association (MARAMA)					
Petroleum Refineries[4]	X	X	X	.....	N.J.A.C. 7:27–33 (New Rule).
State of New Jersey					
Petroleum and VOC Storage Tanks	.....	X	.....	.....	N.J.A.C. 7:27–16.2.
Facility-Specific Emission Limit & Alternative Emission Limit	X	X	.....	.....	N.J.A.C. 7:27–16.17 & 19.13.
BART[3]-affected Equipment	X	.....	X	X	N.J.A.C. 7:27–33 (New rule).
Municipal Waste Combustors	X	.....	.....	.....	N.J.A.C. 7:27–19.12.
Publicly-owned Treatment Works (sewage sludge incinerators)	X	.....	.....	.....	N.J.A.C. 7:27–19.28.
CTGs issued after 2006[4]	.....	X	.....	.....	N.J.A.C. 7:27–16.7.
Process Heaters & Boilers at Petroleum Refineries[4]	X	.....	.....	.....	N.J.A.C. 7:27–33 (New Rule).

[1] N.J.A.C.—New Jersey Administrative Code.
[2] EGU—Electric Generating Unit.
[3] BART—Best Available Retrofit Technology.
[4] Future Rule Revisions.

4. What Is EPA's Evaluation?

New Jersey submitted a RACT assessment in a SIP revision dated August 1, 2007 and supplemented the submittal on December 14, 2007. New Jersey's RACT analysis included 56 CTG and ACT source categories and over 59 non-CTG source categories.

Of those 115 categories New Jersey has concluded that the RACT rules currently approved into the SIP meet the RACT requirement for 102 categories under the 8-hour ozone standard. New Jersey has identified 13 categories for which it has preliminarily determined that new limits should be proposed. New Jersey has since proposed provisions for all 13 of these categories.

The RACT submission from the State of New Jersey consists of: (1) A certification that previously adopted RACT controls in New Jersey's SIP for 101 source categories that were approved by EPA under the 1-hour ozone NAAQS are based on the currently available technically and economically feasible controls, and that they continue to represent RACT for the 8-hour ozone implementation purposes; (2) a commitment to adopt new or more stringent regulations that represent RACT control levels for both specific source categories and specific sources; and (3) a negative declaration that for certain of CTGs and/or ACTs there are no sources within New Jersey or that there are no sources above the applicability thresholds.

EPA has reviewed the State's RACT analysis and agrees with the State's conclusions. EPA is proposing to conditionally approve the RACT SIP for the 8-hour ozone NAAQS based on New Jersey's commitment to submit adopted RACT rules for 13 source categories by April 1, 2009. We believe that New Jersey will be able to meet this commitment because the State has already proposed RACT provisions for all 13 source categories and has recently adopted a rule for one of the source categories and the comment period for the remaining categories has closed.

E. RACM Analysis

1. What Are the Act Requirements?

Pursuant to section 172(c)(1) of the Act, states are required to implement all Reasonably Available Control Measures (RACM) as expeditiously as practicable. Specifically, section 172(c)(1) states the following: ''In general—Such plan provisions shall provide for the implementation of all reasonably available control measures as expeditiously as practicable (including such reductions in emissions from existing sources in the area as may be obtained through the adoption, at a minimum, of reasonably available control technology) and shall provide for attainment of the national primary ambient air quality standards.''

Furthermore, in EPA's Phase 2 Rule, EPA describes how states must include with their attainment demonstration a RACM analysis (70 FR 71659). The purpose of the RACM analysis is to determine whether or not reasonably available control measures exist that would advance the attainment date for nonattainment areas. Control measures that would advance the attainment date are considered RACM and must be included in the SIP. RACM are necessary to ensure that the attainment date is achieved ''as expeditious as practicable.''

RACM is defined by the EPA as any potential control measure for application to point, area, on-road and non-road emission source categories that meets the following criteria:

- The control measure is technologically feasible
- The control measure is economically feasible
- The control measure does not cause ''substantial widespread and long-term adverse impacts''
- The control measure is not ''absurd, unenforceable, or impracticable''
- The control measure can advance the attainment date by at least one year.

2. How Did the State Perform the RACM Analysis?

New Jersey used four separate efforts to identify measures that might be considered as potential RACM: The transportation control measures (TCMs) for on-road mobile sources effort, the non-TCM measures (point, area and off-road sources) effort, the New Jersey workgroup measures effort, and the OTC measures effort.

a. Transportation Control Measures

The New Jersey Department of Transportation (NJDOT), in consultation with the NJDEP, identified 26 measures to be evaluated as prospective mobile source measures that could be considered reasonably available control measures. After identifying these measures, NJDOT analyzed each measure for its potential emissions reduction benefit, economic impact, practicability and potential adverse impact. NJDOT analyzed each prospective emission control measure for each nonattainment area. Eleven measures advanced to the final stage of the RACM analysis.

b. Non-TCM Measures (Point, Area and Off-Road Sources)

NJDEP reviewed a variety of sources of information, such as, those from regional planning organizations, other state organizations, existing NJDEP documents, EPA regional efforts, and ''Early Action Compact'' plans (plans developed and implemented by some states to avoid being designated nonattainment), to develop a list of 457 potential non-transportation control measures (non-TCMs). After focusing on those measures with significant VOC and NO_X emissions and eliminating those that were already in place in New Jersey and those that are more stringently addressed at the Federal level, a list of 81 potential non-TCMs was advanced to the next phase of the analysis and added to the compiled list.

c. New Jersey Workgroup Measures

New Jersey organized the ''Reducing Air Pollution Together Initiative,'' which brought together over 200 people representing various industries, environmental and civic groups. Six workgroups were formed to develop potential control measures for NJDEP consideration. A list of 250 potential measures was developed and ranked and the workgroups prepared ''White Papers'' for 60 measures that passed the next round of evaluations. A more extensive review followed with 21 measures being added to the compiled list of potential RACM measures.

d. OTC Measures

New Jersey worked with the other states that are part of the Ozone Transport Commission to identify regional control measures that would be of greater benefit if implemented by all the states in the OTC region. Several of these control measures were identified for adoption and the remaining measures were added to the compiled list.

e. Compiled Measures

NJDEP compiled a list of 103 non-TCM measures [81 from the Non-TCM (point, area and off-road sources), 21 from NJDEP workgroup (white papers), and 1 OTC measure] and analyzed these measures using the RACM criterion for technological feasibility. A total of 85 measures passed the technological feasibility criterion. Table F2.1 in Appendix F2 of the State's SIP includes a list of all measures considered and the reasons that they passed or failed each RACM criterion. If sufficient information was not available for a technological feasibility determination to be made for a measure, the measure was evaluated for the remaining criteria, and a ''N/A'' determination was made for technological feasibility. The remaining 85 measures were analyzed for economic feasibility and other local factors, such as whether the measure could be implemented by June 2008.[2] A total of 17 non-TCM measures advanced to the final stage of analysis. A total of 28 measures, 11 TCMs and 17 non-TCMs, passed the technological feasibility, economic feasibility and ''other local considerations'' RACM criteria.

3. What Were the Results of the RACM Analysis?

In order for any measure to advance the attainment date of June 2010 to June 2009, the measures would have to be implemented and achieve the emission reductions by June 2008. The combined emission benefits from VOC and NO_X measures were 15.5 tons/day in the Northern New Jersey Counties and 7.4 tons/day in the Southern New Jersey Counties. The State's analysis demonstrated that none of the RACM's, singularly or in combination, will yield emissions benefits sufficient to advance the 2010 attainment date for the two nonattainment areas in which the New Jersey counties are located. Regardless, the State committed to develop and implement five of these measures as part of its RACT control program and New Jersey has proposed all five of these measures for rulemaking.

4. What Is EPA's Evaluation?

New Jersey evaluated all source categories that could contribute meaningful emission reductions and identified and evaluated an extensive list of potential control measures. The State considered the time needed to develop and adopt regulations and the time it would take to see the benefit from these measures as a further screen of their reasonableness and availability. The State has proceeded with developing several of the measures as part of its RACT control program. EPA has reviewed the RACM analysis and finds that there are no RACM that would advance the moderate area attainment date of 2010 for the two nonattainment areas in which the New Jersey counties are located.

Therefore, EPA is proposing to approve New Jersey's moderate area RACM SIP for the two moderate nonattainment areas in which New Jersey is located.

F. Conformity Budgets

1. What Are the Act Requirements?

The Act requires Federal actions in nonattainment and maintenance areas to ''conform to'' the goals of SIPs. This means that such actions will not: (a) Cause or contribute to violations of a NAAQS; (b) worsen the severity of an existing violation; or (c) delay timely attainment of any NAAQS. Actions involving Federal Highway Administration (FHWA) or Federal Transit Administration (FTA) funding or approval are subject to the transportation conformity rule (40 CFR part 93, subpart A). Under this rule, metropolitan planning organizations (MPOs) in nonattainment and maintenance areas coordinate with state air quality and transportation agencies, EPA, and the FHWA and FTA to demonstrate that their long range transportation plans (''plans'') and transportation improvement programs (TIP) conform to applicable SIPs. This is typically determined by showing that estimated emissions from existing and planned highway and transit projects are less than or equal to the motor vehicle emissions budgets (''budgets'') contained in a SIP. The General Conformity regulation (40 CFR part 93, subpart B) requires actions initiated by other Federal agencies in nonattainment and maintenance areas to also conform

[2] June 2008 was selected as measures would need to be implemented by that time in order to advance the attainment date. Measures relied on for attainment need to be implemented by the beginning of the final full ozone season preceding the attainment date. Thus, to advance attainment to 2009, measures would need to be implemented by the beginning of the 2008 ozone season.

to the SIP. One option for Federal agencies to demonstrate conformity is to meet facility-wide emissions budgets that are specified in the SIP. New Jersey has two major Federal facilities for which it has chosen to establish facility-wide emissions budgets.

2. What Conformity Budgets Were Included in the SIP?

Three MPOs cover New Jersey's two ozone nonattainment areas. New Jersey sets budgets per MPO (called ''sub-area budgets''), allowing each MPO to make a conformity determination independent of the other two on the condition that the other MPOs in the same nonattainment area have conforming plans and TIPs in place when the new determination is made. Both the Delaware Valley Regional Planning Commission (DVRPC) and the South Jersey Transportation Planning Organization (SJTPO) reside within the Southern New Jersey Counties. Twelve of the thirteen counties covered by the North Jersey Transportation Planning Authority (NJTPA) are within the Northern New Jersey Counties, while one county (Ocean County) is within the Southern New Jersey Counties. Since conformity is determined on a nonattainment area basis, New Jersey is designating separate budgets for Ocean County and the remaining 12-county NJTPA area. As these budgets cover separate nonattainment areas, NJTPA may not combine the Ocean County budget with the 12-county budget to make an overall conformity determination in the event that one area is unable to meet its individual budget; however, this does not preclude NJTPA from making a positive conformity finding in the other area. Table 6 lists New Jersey's submitted budgets.

TABLE 6—MOTOR VEHICLE EMISSIONS BUDGETS SUBMITTED BY NEW JERSEY

[Tons per day]

MPO	2008		2009	
	VOC	NO_X	VOC	NO_X
NJTPA (except Ocean County)	85.38	143.60	79.00	133.39
NJTPA (Ocean County only)	6.93	8.69	6.45	12.65
DVRPC	27.75	69.67	25.98	63.66
SJTPO	14.14	32.93	13.04	29.64

Table 7 contains emission budgets for McGuire Air Force Base (AFB) and Lakehurst Naval Air Station (NAS). These budgets were established in consultation with the United States Air Force and the Navy and will provide McGuire AFB and Lakehurst NAS the operational flexibility necessary to meet their missions and future missions of the Department of Defense and allow them to meet the requirements of the General Conformity regulation.

TABLE 7—EMISSION BUDGETS FOR MCGUIRE AFB AND LAKEHURST NAS

Base	Year	VOC (tons/year)	NO_X (tons/year)
McGuire AFB	2008	730	1,534
	2009	730	1,534
	2010	730	1,534
	2011	730	1,534
Lakehurst NAS	2008	109	563
	2009	115	639
	2010	122	716
	2011	129	793

3. What Is EPA's Evaluation?

For budgets to be approvable, they must meet, at a minimum, EPA's adequacy criteria (40 CFR 93.118(e)(4)). EPA made an adequacy determination on New Jersey's 2008 and 2009 budgets on July 17, 2008 (73 FR 41068). In our Notice of Adequacy we found that the budgets were ''clearly identified and precisely quantified'' and were ''consistent with applicable requirements.* * *'' We also found that the budgets were ''consistent with and clearly related to the emissions inventory and the control measures in the submitted control strategy implementation plan revision.'' The budgets are identical to the projected 2008 and 2009 on-road mobile source emission inventories.

When EPA determines that budgets are adequate for transportation conformity, we note that an adequacy finding does not imply that budgets will ultimately be approved. In our adequacy determination EPA found that the 2009 budgets demonstrate additional progress toward attainment, however, since EPA will be taking action on the attainment demonstration at a later date, EPA will at that time take action on the 2009 budgets. Consistent with our adequacy review of New Jersey's submittal, EPA is proposing to approve New Jersey's 2008 budgets associated with the 2008 RFP budgets. EPA is also proposing to approve the general conformity budgets for McGuire AFB and Lakehurst NAS.

V. What Are EPA's Conclusions?

EPA is proposing to approve the following SIP elements required by the Act: 2008 RFP and associated 2008 ozone projection year emission inventories, contingency measures for failure to meet the 2008 RFP milestone, 2008 conformity budgets used for planning purposes, moderate area RACM analysis, and general conformity budgets.

EPA has reviewed the State's RACT analysis and agrees with the State's conclusions. EPA is proposing to conditionally approve the RACT analysis for the 8-hour ozone NAAQS based on New Jersey's commitment to submit adopted RACT rules for 13 source categories by April 1, 2009. We believe that New Jersey will be able to

meet this commitment because the State has proposed RACT rules for all 13 source categories and has recently adopted a rule for one of these source categories.

EPA is proposing to conditionally approve the RACT analysis based on a commitment submitted by New Jersey. Under section 110(k)(4) of the Act, EPA may conditionally approve a plan based on a commitment from the State to adopt specific enforceable measures by a date certain, but not later than 1 year from the date of approval. If EPA conditionally approves the commitment in a final rulemaking action, the State must meet its commitment to adopt the identified regulations. If the State fails to do so, this action will become a disapproval upon the State's failure to meet its commitment. EPA will notify the State by letter that this action has occurred. If the conditional approval converts to a disapproval, the commitment will no longer be a part of the approved New Jersey SIP. Upon notification of the State that the conditional approval has converted to a disapproval, EPA will publish a notice in the **Federal Register** notifying the public that the conditional approval automatically converted to a disapproval. If the State meets its commitment, within the applicable time frame, the conditionally approved submission will remain a part of the SIP until EPA takes final action approving or disapproving the new SIP revision. If EPA disapproves the RACT SIP submittal, such action will start a sanctions and FIP clock. If EPA approves the submittal, the RACT analysis will be fully approved in its entirety and will replace the RACT conditionally approved into the SIP.

EPA is not taking action at this time on New Jersey's attainment demonstrations for the New York-Northern New Jersey-Long Island, NY-NJ-CT and the Philadelphia-Wilmington-Atlantic City, PA-NJ-MD-DE 8-hour ozone moderate nonattainment areas, but will do so in a future rulemaking.

VI. Statutory and Executive Order Reviews

Under the Clean Air Act, the Administrator is required to approve a SIP submission that complies with the provisions of the Act and applicable Federal regulations. 42 U.S.C. 7410(k); 40 CFR 52.02(a). Thus, in reviewing SIP submissions, EPA's role is to approve state choices, provided that they meet the criteria of the Clean Air Act. Accordingly, this proposed action merely approves state law as meeting Federal requirements and does not impose additional requirements beyond those imposed by state law. For that reason, this proposed action:

- Is not a ''significant regulatory action'' subject to review by the Office of Management and Budget under Executive Order 12866 (58 FR 51735, October 4, 1993);
- Does not impose an information collection burden under the provisions of the Paperwork Reduction Act (44 U.S.C. 3501 *et seq.*);
- Is certified as not having a significant economic impact on a substantial number of small entities under the Regulatory Flexibility Act (5 U.S.C. 601 *et seq.*);
- Does not contain any unfunded mandate or significantly or uniquely affect small governments, as described in the Unfunded Mandates Reform Act of 1995 (Pub. L. 104–4);
- Does not have Federalism implications as specified in Executive Order 13132 (64 FR 43255, August 10, 1999);
- Is not an economically significant regulatory action based on health or safety risks subject to Executive Order 13045 (62 FR 19885, April 23, 1997);
- Is not a significant regulatory action subject to Executive Order 13211 (66 FR 28355, May 22, 2001);
- Is not subject to requirements of Section 12(d) of the National Technology Transfer and Advancement Act of 1995 (15 U.S.C. 272 note) because application of those requirements would be inconsistent with the Clean Air Act; and
- Does not provide EPA with the discretionary authority to address, as appropriate, disproportionate human health or environmental effects, using practicable and legally permissible methods, under Executive Order 12898 (59 FR 7629, February 16, 1994).

In addition, this rule does not have tribal implications as specified by Executive Order 13175 (65 FR 67249, November 9, 2000), because the SIP is not approved to apply in Indian country located in the state, and EPA notes that it will not impose substantial direct costs on tribal governments or preempt tribal law.

List of Subjects in 40 CFR Part 52

Environmental protection, Air pollution control, Hydrocarbons, Incorporation by reference, Intergovernmental relations, Oxides of nitrogen, Ozone, Reporting and recordkeeping requirements, Volatile organic compounds.

Dated: December 29, 2008.

Alan J. Steinberg,

Regional Administrator, Region 2.

[FR Doc. E9–944 Filed 1–15–09; 8:45 am]

BILLING CODE 6560–50–P

ENVIRONMENTAL PROTECTION AGENCY

40 CFR Part 82

[EPA–HQ–OAR–2008–0503; FRL–8763–2]

RIN–2060–AO77

Protection of Stratospheric Ozone: Allocation of Essential Use Allowances for Calendar Year 2009

AGENCY: Environmental Protection Agency (EPA).

ACTION: Proposed rule.

SUMMARY: EPA is proposing to allocate essential use allowances for import and production of Class I ozone-depleting substances (ODSs) for calendar year 2009. Essential use allowances enable a person to obtain controlled Class I ODSs as part of an exemption to the regulatory ban on the production and import of these chemicals, which became effective as of January 1, 1996. EPA allocates essential use allowances for exempted production or import of a specific quantity of Class I substances solely for the designated essential purpose. The proposed allocation in this action is 63.0 metric tons (MT) of chlorofluorocarbons (CFCs) for use in metered dose inhalers (MDIs) for 2009.

DATES: Written comments on this proposed rule must be received by the EPA Docket on or before February 17, 2009, unless a public hearing is requested. Comments must then be received on or before 30 days following the public hearing. Any party requesting a public hearing must notify the contact listed below under **FOR FURTHER INFORMATION CONTACT** by 5 p.m. Eastern Standard Time on January 21, 2009. If a hearing is held, it will take place on February 2, 2009 at EPA headquarters in Washington DC. EPA will post a notice on our Web site (*http://www.epa.gov/ozone*) announcing further information on the hearing if it is requested.

ADDRESSES: Submit your comments, identified by Docket ID No. EPA–HQ–OAR–2008–0503, by one of the following methods:

- *http://www.regulations.gov:* Follow the on-line instructions for submitting comments.
- *E-mail: A-and-R-docket@epa.gov*
- *Fax:* 202–566–9744
- *Mail:* Air Docket, Environmental Protection Agency, Mailcode 2822T,

1200 Pennsylvania Ave., NW., Washington, DC 20460.

• *Hand Delivery or Courier.* Deliver your comments to: EPA Air Docket, EPA West 1301 Constitution Avenue, NW., Room 3334, Mail Code 2822T, Washington, DC 20460. Such deliveries are only accepted during the Docket's normal hours of operation, and special arrangements should be made for deliveries of boxed information.

Instructions: Direct your comments to Docket ID No. EPA–HQ–OAR–2008–0503. EPA's policy is that all comments received by the docket will be included in the public docket without change and may be made available online at *www.regulations.gov*, including any personal information provided, unless the comment includes information claimed to be Confidential Business Information (CBI) or other information whose disclosure is restricted by statute. Do not submit information through *www.regulations.gov* or e-mail that you consider to be CBI or otherwise protected. If you would like the Agency to consider comments that include CBI, EPA recommends that you submit the comments to the docket that exclude the CBI portion but that you provide a complete version of your comments, including the CBI, to the person listed under **FOR FURTHER INFORMATION CONTACT** below. The *www.regulations.gov* Web site is an ''anonymous access'' system, which means EPA will not know your identity or contact information unless you provide it in the body of your comment. If you send an e-mail comment directly to EPA without going through *www.regulations.gov* your e-mail address will be automatically captured and included as part of the comment that is placed in the public docket and made available on the Internet.

If you submit an electronic comment, EPA recommends that you include your name and other contact information in the body of your comment and with any disk or CD–ROM you submit. If EPA cannot read your comment due to technical difficulties and cannot contact you for clarification, EPA may not be able to consider your comment. Electronic files should avoid the use of special characters, any form of encryption, and be free of any defects or viruses. For additional information about EPA's public docket visit the EPA Docket Center homepage at *http://www.epa.gov/epahome/dockets.htm.*

Docket: All documents in the docket are listed in the *www.regulations.gov* index. Although listed in the index, some information is not publicly available, e.g., CBI or other information whose disclosure is restricted by statute. Certain other material, such as copyrighted material, will be publicly available only in hard copy. Publicly available docket materials are available either electronically in *www.regulations.gov* or in hard copy at the Air Docket, EPA/DC, EPA West, Room 3334, 1301 Constitution Ave., NW., Washington, DC. This Docket Facility is open from 8:30 a.m. to 4:30 p.m., Monday through Friday, excluding legal holidays. The telephone number for the Public Reading Room is (202) 566–1744, and the telephone number for the Air Docket is (202) 566–1742.

FOR FURTHER INFORMATION CONTACT: Jennifer Bohman, by regular mail: U.S. Environmental Protection Agency, Stratospheric Protection Division (6205J), 1200 Pennsylvania Avenue, NW., Washington, DC 20460; by courier service or overnight express: 1301 L Street, NW., Room 1013K, Washington, DC 20005; by telephone: (202) 343–9548; or by e-mail: *bohman.jennifer@epa.gov.*

SUPPLEMENTARY INFORMATION:

Table of Contents

I. General Information
  A. What should I consider when preparing my comments?
II. Basis for Allocating Essential Use Allowances
  A. What are essential use allowances?
  B. Under what authority does EPA allocate essential use allowances?
  C. What is the process for allocating essential use allowances?
III. Essential Use Allowances for Medical Devices
IV. Proposed Allocation of Essential Use Allowances for Calendar Year 2009
V. Statutory and Executive Order Reviews
  A. Executive Order 12866: Regulatory Planning and Review
  B. Paperwork Reduction Act
  C. Regulatory Flexibility Act
  D. Unfunded Mandates Reform Act
  E. Executive Order 13132: Federalism
  F. Executive Order 13175: Consultation and Coordination With Indian Tribal Governments
  G. Executive Order 13045: Protection of Children From Environmental Health Risks and Safety Risks
  H. Executive Order 13211: Actions That Significantly Affect Energy Supply, Distribution, or Use
  I. National Technology Transfer and Advancement Act
  J. Executive Order 12898: Federal Actions To Address Environmental Justice in Minority Populations and Low-Income Populations

I. General Information

A. What should I consider when preparing my comments?

1. *Confidential Business Information.* Do not submit this information to EPA through *www.regulations.gov* or e-mail. Clearly mark the part or all of the information that you claim to be CBI. For CBI information in a disk or CD–ROM that you mail to EPA, mark the outside of the disk or CD–ROM as CBI and then identify electronically within the disk or CD–ROM the specific information that is claimed as CBI. In addition to one complete version of the comment that includes information claimed as CBI, a copy of the comment that does not contain the information claimed as CBI must be submitted for inclusion in the public docket. Information so marked will not be disclosed except in accordance with procedures set forth in 40 CFR part 2.

2. *Tips for Preparing Your Comments.* When submitting comments, remember to:

• Identify the rulemaking by docket number and other identifying information (subject heading, **Federal Register** date and page number).

• Follow directions—The agency may ask you to respond to specific questions or organize comments by referencing a Code of Federal Regulations (CFR) part or section number.

• Explain why you agree or disagree; suggest alternatives and substitute language for your requested changes.

• Describe any assumptions and provide any technical information and/or data that you used.

• If you estimate potential costs or burdens, explain how you arrived at your estimate in sufficient detail to allow for it to be reproduced.

• Provide specific examples to illustrate your concerns, and suggest alternatives.

• Explain your views as clearly as possible, avoiding the use of profanity or personal threats.

• Make sure to submit your comments by the comment period deadline identified.

II. Basis for Allocating Essential Use Allowances

A. What are essential use allowances?

Essential use allowances are allowances to produce or import certain ozone depleting substances (ODSs) in the U.S. for purposes that have been deemed ''essential'' by the U.S. Government and by the Parties to the Montreal Protocol on Substances that Deplete the Ozone Layer (Montreal Protocol).

The Montreal Protocol is the international agreement aimed at reducing and eliminating the

production and consumption [1] of ODSs. The elimination of production and consumption of Class I ODSs is accomplished through adherence to phaseout schedules for specific Class I ODSs,[2] which include CFCs, halons, carbon tetrachloride, and methyl chloroform. As of January 1, 1996, production and import of most Class I ODSs were phased out in developed countries, including the United States.

However, the Montreal Protocol and the Clean Air Act (the Act) provide exemptions that allow for the continued import and/or production of Class I ODSs for specific uses. Under the Montreal Protocol, exemptions may be granted for uses that are determined by the Parties to be ''essential.'' Decision IV/25, taken by the Parties to the Protocol in 1992, established criteria for determining whether a specific use should be approved as essential, and set forth the international process for making determinations of essentiality. The criteria for an essential use, as set forth in paragraph 1 of Decision IV/25, are the following:

''(a) That a use of a controlled substance should qualify as 'essential' only if:

(i) It is necessary for the health, safety or is critical for the functioning of society (encompassing cultural and intellectual aspects); and

(ii) There are no available technically and economically feasible alternatives or substitutes that are acceptable from the standpoint of environment and health;

(b) That production and consumption, if any, of a controlled substance for essential uses should be permitted only if:

(i) All economically feasible steps have been taken to minimize the essential use and any associated emission of the controlled substance; and

(ii) The controlled substance is not available in sufficient quantity and quality from existing stocks of banked or recycled controlled substances, also bearing in mind the developing countries' need for controlled substances.''

B. Under what authority does EPA allocate essential use allowances?

Title VI of the Act implements the Montreal Protocol for the United States.[3] Section 604(d) of the Act authorizes EPA to allow the production of limited quantities of Class I ODSs after the phaseout date for the following essential uses:

(1) Methyl Chloroform, ''solely for use in essential applications (such as nondestructive testing for metal fatigue and corrosion of existing airplane engines and airplane parts susceptible to metal fatigue) for which no safe and effective substitute is available.'' Under section 604(d)(1) of the Act, this exemption was available only until January 1, 2005. Prior to that date, EPA issued methyl chloroform allowances to the U.S. Space Shuttle and Titan Rocket programs.

(2) Medical devices (as defined in section 601(8) of the Act), ''if such authorization is determined by the Commissioner [of the Food and Drug Administration], in consultation with the Administrator [of EPA] to be necessary for use in medical devices.'' EPA issues allowances to manufacturers of MDIs that use CFCs as propellant for the treatment of asthma and chronic obstructive pulmonary disease.

(3) Aviation safety, for which limited quantities of halon-1211, halon-1301, and halon-2402 may be produced ''if the Administrator of the Federal Aviation Administration, in consultation with the Administrator [of EPA] determines that no safe and effective substitute has been developed and that such authorization is necessary for aviation safety purposes.'' Neither EPA nor the Parties have ever granted a request for essential use allowances for halon, because alternatives are available or because existing quantities of this substance are large enough to provide for any needs for which alternatives have not yet been developed.

An additional essential use exemption under the Montreal Protocol, as agreed in Decision X/19, is the general exemption for laboratory and analytical uses. This exemption is reflected in EPA's regulations at 40 CFR part 82, subpart A. While the Act does not specifically provide for this exemption, EPA has determined that an exemption for essential laboratory and analytical uses is allowable under the Act as a *de minimis* exemption. The *de minimis* exemption is addressed in EPA's final rule of March 13, 2001 (66 FR 14760–14770). The Parties to the Protocol subsequently agreed (Decision XI/15) that the general exemption does not apply to the following uses: testing of oil and grease, and total petroleum hydrocarbons in water; testing of tar in road-paving materials; and forensic finger-printing. EPA incorporated this exemption at Appendix G to Subpart A of 40 CFR part 82 on February 11, 2002 (67 FR 6352). In a December 29, 2005 final rule, EPA extended the general exemption for laboratory and analytical uses through December 31, 2007 (70 FR 77048), in accordance with Decision XV/8 of the Parties to the Protocol. At the 19th Meeting of the Parties in September 2007, the Parties agreed to extend the global laboratory and analytical use exemption through December 31, 2011, in Decision XIX/18. In a December 27, 2007 final rulemaking EPA took action to (1) extend the laboratory and analytical use exemption from December 31, 2007 to December 31, 2011 for specific laboratory uses, (2) apply the laboratory and analytical use exemption to the production and import of methyl bromide, and (3) eliminate the testing of organic matter in coal from the laboratory and analytical use exemption (72 FR 73264).

C. What is the process for allocating essential use allowances?

The procedure set out by Decision IV/25 calls for individual Parties to nominate essential uses and the total amount of ODSs needed for those essential uses on an annual basis. The Protocol's Technology and Economic Assessment Panel (TEAP) evaluates the nominated essential uses and makes recommendations to the Parties. The Parties make the final decisions on whether to approve a Party's essential use nomination at their annual meeting. This nomination process occurs approximately two years before the year in which the allowances would be in effect. The allowances proposed for allocation for 2009 were first nominated by the United States in January 2007.

For MDIs, EPA requests information from manufacturers about the number and type of MDIs they plan to produce, as well as the amount of CFCs necessary for production. EPA then forwards the information to the Food and Drug Administration (FDA), which determines the amount of CFCs necessary for MDIs in the coming calendar year. Based on FDA's determination, EPA proposes allocations to each eligible entity. Under the Act and the Montreal Protocol, EPA may allocate essential use allowances in quantities that together are below or equal to the total amount approved by the Parties. EPA will not allocate essential use allowances in amounts higher than the total approved by the Parties. For 2009, the Parties authorized

[1] ''Consumption'' is defined as the amount of a substance produced in the United States, plus the amount imported into the United States, minus the amount exported to Parties to the Montreal Protocol (see Section 601(6) of the Clean Air Act).

[2] Class I ozone depleting substances are listed at 40 CFR part 82, subpart A, appendix A.

[3] *See* Section 614(b) of the Act. EPA's regulations implementing the essential use provisions of the Act and the Protocol are located in 40 CFR part 82.

the United States to allocate up to 282 MT of CFCs for essential uses.

III. Essential Use Allowances for Medical Devices

The following is a step-by-step list of actions EPA and FDA have taken thus far to implement the exemption for medical devices found at section 604(d)(2) of the Act for the 2009 calendar year.

1. On January 16, 2008, EPA sent letters to MDI manufacturers requesting the following information under section 114 of the Act (''114 letters''):

a. The MDI product where CFCs will be used.

b. The number of units of each MDI product produced from 1/1/07 to 12/31/07.

c. The number of units anticipated to be produced in 2008.

d. The number of units anticipated to be produced in 2009.

e. The gross target fill weight per unit (grams).

f. Total amount of CFCs to be contained in the MDI product for 2009.

g. The additional amount of CFCs necessary for production.

h. The total CFC request per MDI product for 2009.

The 114 letters are available for review in the Air Docket ID No. EPA–HQ–OAR–2008–0503. The companies requested that their responses be treated as confidential business information; for this reason, EPA has placed the responses in the confidential portion of the docket.

2. At the end of January 2008, as required by 40 CFR 82.13(u), EPA received information from MDI manufacturers that included such data as the type and quantity of CFCs held at the end of the year (i.e. stocks of pre-1996 and post-1996 CFCs). The data submitted from the MDI manufacturers is available for review in the Air Docket ID No. EPA–HQ–OAR–2008–0503. The companies requested that their individual responses be treated as confidential business information; for this reason, EPA has placed the individual responses in the confidential portion of the docket.

3. On February 13, 2008, EPA sent FDA the information MDI manufacturers provided in response to the 114 letters and information required by 40 CFR 82.13(u) with a letter requesting that FDA make a determination regarding the amount of CFCs necessary for MDIs for calendar year 2009. This letter is available for review in Air Docket ID No. EPA–HQ–OAR–2008–0503.

4. On April 28, 2008, FDA sent a letter to EPA stating the amount of CFCs determined by the Commissioner to be necessary for each MDI company in 2009. This letter is available for review in the Air Docket ID No. EPA–HQ–OAR–2008–0503. FDA's letter informed EPA that it had determined that 88.0 MT of CFCs were necessary for use in medical devices in the year 2009.

5. On August 12, 2008, FDA sent a letter to EPA revising its April 28, 2008 essential use determination. FDA's revised letter informed EPA that it had determined that 63.0 MT of CFCs were necessary for use in medical devices for the year 2009. In its letter FDA stated, ''This letter revises our recommendations for the amount of CFCs necessary for use in medical devices in the year 2009. The amount of CFCs recommended in our April 28, 2008 letter was based on information available then, that led to assumptions that are now outdated.'' This letter is available for review in the Air Docket ID No. EPA–HQ–OAR–2008–0503.

With respect to the 2009 determination, FDA stated, ''FDA's determination for the allocation of CFCs is lower than the total amount requested by sponsors. In reaching this determination, we took into account the sponsors' production of MDIs that used CFCs as a propellant in 2007, their estimated production in 2008, their estimated production in 2009, their anticipated essential-use allocations in 2008, their current (as of December 31, 2007) stockpile levels, and any intercompany transfers of CFCs. Finally, FDA based its determination for 2009 on an estimate of the quantity of CFCs that would allow manufacturers to have a 12-month stockpile at the end of 2009, in accordance with paragraph 3 of Decision XVI/12 and paragraph 2 of Decision XVII/5.''

The letter stated that in making its determination, FDA made the following assumptions:

- All manufacturers will receive the full essential-use allocation proposed by EPA for calendar year 2008 (72 FR 32269, June 12, 2007);
- All manufacturers will procure the full quantity of CFCs allocated to them for 2008; and
- No bulk CFCs currently held by, or allocated to, any manufacturer will be exported from the United States.

EPA has confirmed with FDA that this determination is consistent with Decision XVII/5, including language on stocks that states that Parties ''shall take into account pre- and post-1996 stocks of controlled substances as described in paragraph 1(b) of Decision IV/25, such that no more than a one-year operational supply is maintained by that manufacturer.'' Allowing manufacturers to maintain up to a one-year operational supply accounts for unexpected variability in the demand for MDI products or other unexpected occurrences in the market and therefore ensures that MDI manufacturers are able to produce their essential use MDIs.

For calendar year 2009, FDA's determination aggregates the amounts of CFC–11, –12, or –114 being allocated to the MDI manufacturer. In its letter FDA stated, ''As has generally been our practice, FDA is aggregating the amounts for CFCs, and is providing recommendations on the total amounts of CFCs necessary to protect the public health. FDA expects manufacturers to maintain an appropriate balance of CFCs necessary to produce their CFC MDIs.''

In accordance with the FDA determination, today's action proposes to allocate essential use allowances for a total of 63.0 MT of CFCs for use in MDIs for calendar year 2009.

The amounts listed in this proposal are subject to additional review and revision by EPA and FDA if information demonstrates that the proposed allocations are either too high or too low. We specifically request comment on the extent to which the proposed allocation of CFCs is sufficient to protect public health and ensure the manufacture and continuous availability of CFCs necessary to meet the expected demand. We also request comment on whether the proposed allocation, when considered along with current stocks, will best protect consumers by providing a smooth transition to non-CFC alternatives. Commenters requesting increases or decreases of essential use allowances should provide detailed information supporting a claim for additional or fewer CFCs. Any company that needs less than the full amount listed in this proposal should notify EPA of the actual amount needed.

IV. Proposed Allocation of Essential Use Allowances for Calendar Year 2009

TABLE I—ESSENTIAL USE ALLOWANCES FOR CALENDAR YEAR 2009

Company	Chemical	2009 Quantity (metric tons)
(i) Metered Dose Inhalers (for oral inhalation) for Treatment of Asthma and Chronic Obstructive Pulmonary Disease		
Armstrong	CFC–11 or CFC–12 or CFC–114.	63.0

EPA proposes to allocate essential use allowances for calendar year 2009 to the

entity listed in Table I. These allowances are for the production or import of the specified quantity of Class I controlled substances solely for the specified essential use.

V. Statutory and Executive Order Reviews

A. Executive Order 12866: Regulatory Planning and Review

Under Executive Order (EO) 12866 (58 FR 51735, October 4, 1993), this action is a ''significant regulatory action'' because it raises novel legal or policy issues. Accordingly, EPA submitted this action to the Office of Management and Budget (OMB) for review under EO 12866 and any changes made in response to OMB recommendations have been documented in the docket for this action.

EPA prepared an analysis of the potential costs and benefits related to this action. This analysis is contained in the Agency's Regulatory Impact Analysis (RIA) for the entire Title VI phaseout program (U.S. Environmental Protection Agency, ''Regulatory Impact Analysis: Compliance with Section 604 of the Clean Air Act for the Phaseout of Ozone Depleting Chemicals,'' July 1992). A copy of the analysis is available in the docket for this action and the analysis is briefly summarized here. The RIA examined the projected economic costs of a complete phaseout of consumption of ozone-depleting substances, as well as the projected benefits of phased reductions in total emissions of CFCs and other ozone-depleting substances, including essential use CFCs used for MDIs.

B. Paperwork Reduction Act

This action does not impose any new information collection burden. The recordkeeping and reporting requirements included in this action are already included in an existing information collection burden and this action does not propose any changes that would affect the burden. However, the Office of Management and Budget (OMB) has previously approved the information collection requirements contained in the existing regulations at 40 CFR 82.8(a) under the provisions of the Paperwork Reduction Act, 44 U.S.C. 3501 *et seq.,* and has assigned OMB control number 2060–0170. The OMB control numbers for EPA's regulations in 40 CFR are listed in 40 CFR part 9.

C. Regulatory Flexibility Act

The Regulatory Flexibility Act generally requires an agency to prepare a regulatory flexibility analysis of any rule subject to notice and comment rulemaking requirements under the Administrative Procedure Act or any other statute unless the agency certifies that the rule will not have a significant economic impact on a substantial number of small entities. Small entities include small businesses, small organizations, and small governmental jurisdictions.

For purposes of assessing the impact of today's proposed rule on small entities, small entity is defined as: (1) A small business that is primarily engaged in pharmaceutical preparations manufacturing as defined by NAICS code 325412 with less than 750 employees; (2) a small governmental jurisdiction that is a government of a city, county, town, school district or special district with a population of less than 50,000; and (3) a small organization that is any not-for-profit enterprise which is independently owned and operated and is not dominant its field.

After considering the economic impacts of today's proposed rule on small entities, I certify that this action will not have a significant economic impact on a substantial number of small entities. In determining whether a rule has a significant economic impact on a substantial number of small entities, the impact of concern is any significant adverse economic impact on small entities, since the primary purpose of the regulatory flexibility analyses is to identify and address regulatory alternatives ''which minimize any significant economic impact of the rule on small entities.'' 5 U.S.C. 603 and 604. Thus, an agency may certify that a rule will not have a significant economic impact on a substantial number of small entities if the rule relieves regulatory burden, or otherwise has a positive economic effect on all of the small entities subject to the rule.

This proposed action will provide an otherwise unavailable benefit to those companies that are receiving essential use allowances by creating an exemption to the regulatory phaseout of chlorofluorocarbons. We have therefore concluded that today's proposed rule will relieve regulatory burden for all small entities. We continue to be interested in the potential impact of the proposed rule on small entities and welcome comments on issues related to such impacts.

D. Unfunded Mandates Reform Act

This action contains no Federal mandates under the provisions of Title II of the Unfunded Mandates Reform Act of 1995 (UMRA), 2 U.S.C. 1531–1538 for State, local, or tribal governments or the private sector. The action imposes no enforceable duty on any State, local or tribal governments or the private sector. This action is deregulatory and does not impose any new requirements on any entities. Therefore, this action is not subject to the requirements of sections 202 and 205 of the UMRA. This action is also not subject to the requirements of section 203 of UMRA because it contains no regulatory requirements that might significantly or uniquely affect small governments because this rule merely allocates essential use exemptions to entities as an exemption to the ban on production and import of Class I ODSs.

E. Executive Order 13132: Federalism

Executive Order 13132, titled ''Federalism'' (64 FR 43255, August 10, 1999), requires EPA to develop an accountable process to ensure ''meaningful and timely input by State and local officials in the development of regulatory policies that have federalism implications.'' ''Policies that have federalism implications'' is defined in the Executive Order to include regulations that have ''substantial direct effects on the States, on the relationship between the national government and the States, or on the distribution of power and responsibilities among the various levels of government.''

This proposed rule does not have federalism implications. It will not have substantial direct effects on the States, on the relationship between the national government and the States, or on the distribution of power and responsibilities among the various levels of government, as specified in Executive Order 13132. Thus, Executive Order 13132 does not apply to this rule.

F. Executive Order 13175: Consultation and Coordination With Indian Tribal Governments

This action does not have tribal implications, as specified in Executive Order 13175 (65 FR 67249, November 9, 2000). This action does not impose substantial direct compliance costs on Indian tribal governments. Thus, Executive Order 13175 does not apply to this action. EPA specifically solicits additional comment on this proposed action from tribal officials.

G. Executive Order 13045: Protection of Children From Environmental Health Risks and Safety Risks

EPA interprets EO 13045 as applying to those regulatory actions that concern health or safety risks, such that the analysis required under section 5–501 of the Order has the potential to influence the regulation. This proposed rule is not

subject to EO 13045 because it implements Section 604(d)(2) of the Clean Air Act which states that the Agency shall authorize essential use exemptions should the Food and Drug Administration determine that such exemptions are necessary.

H. Executive Order 13211: Actions That Significantly Affect Energy Supply, Distribution, or Use

This action is not subject to Executive Order 13211 (66 FR 28355 (May 22, 2001)), because it is not a significant regulatory action under Executive Order 12866.

I. National Technology Transfer and Advancement Act

Section 12(d) of the National Technology Transfer and Advancement Act of 1995 (''NTTAA''), Public Law 104–113, 12(d) (15 U.S.C. 272 note) directs EPA to use voluntary consensus standards in its regulatory activities unless to do so would be inconsistent with applicable law or otherwise impractical. Voluntary consensus standards are technical standards (e.g., materials specifications, test methods, sampling procedures, and business practices) that are developed or adopted by voluntary consensus standards bodies. The NTTAA directs EPA to provide Congress, through OMB, explanations when the Agency decides not to use available and applicable voluntary consensus standards. This proposed rule does not involve technical standards. Therefore, EPA did not consider the use of any voluntary consensus standards.

J. Executive Order 12898: Federal Actions to Address Environmental Justice in Minority Populations and Low-Income Populations

Executive Order (EO) 12898 (59 FR 7629 (Feb. 16, 1994)) establishes federal executive policy on environmental justice. Its main provision directs federal agencies, to the greatest extent practicable and permitted by law, to make environmental justice part of their mission by identifying and addressing, as appropriate, disproportionately high and adverse human health or environmental effects of their programs, policies, and activities on minority populations and low-income populations in the United States.

EPA has concluded that it is not practicable to determine whether there would be disproportionately high and adverse human health or environmental effects on minority and/or low income populations from this proposed rule. EPA believes, however, that this action affects the level of environmental protection equally for all affected populations without having any disproportionately high and adverse human health or environmental effects on any population, including any minority or low-income population. Any ozone depletion that results from this proposed rule will impact all affected populations equally because ozone depletion is a global environmental problem with environmental and human effects that are, in general, equally distributed across geographical regions.

List of Subjects in 40 CFR Part 82

Environmental protection, Administrative practice and procedure, Air pollution control, Chemicals, Chlorofluorocarbons, Imports, Methyl Chloroform, Ozone, Reporting and recordkeeping requirements.

Dated: January 12, 2009.

Stephen L. Johnson,

Administrator.

40 CFR Part 82 is proposed to be amended as follows:

PART 82–PROTECTION OF STRATOSPHERIC OZONE

1. The authority citation for part 82 continues to read as follows:

Authority: 42 U.S.C. 7414, 7601, 7671–7671q.

Subpart A—Production and Consumption Controls

2. Section 82.8 is amended by revising the table in paragraph (a) to read as follows:

§ 82.8 Grant of essential use allowances and critical use allowances.

(a) * * *

TABLE I.—ESSENTIAL USE ALLOWANCES FOR CALENDAR YEAR 2009

Company	Chemical	2009 Quantity (metric tons)
(i) Metered Dose Inhalers (for oral inhalation) for Treatment of Asthma and Chronic Obstructive Pulmonary Disease		
Armstrong	CFC–11 or CFC–12 or CFC–114.	63.0

* * * * *

[FR Doc. E9–945 Filed 1–15–09; 8:45 am]

BILLING CODE 6560–50–P

DEPARTMENT OF COMMERCE

National Oceanic and Atmospheric Administration

50 CFR Part 648

[Docket No. 080521698–8699–01]

RIN 0648–AW87

Fisheries of the Northeastern United States; Northeast Multispecies Fishery; Secretarial Interim Action

AGENCY: National Marine Fisheries Service (NMFS), National Oceanic and Atmospheric Administration (NOAA), Commerce.

ACTION: Proposed rule; request for comment.

SUMMARY: NMFS proposes a temporary Secretarial interim action under the Magnuson-Stevens Fishery Conservation and Management Act (Magnuson-Stevens Act) to implement measures intended to immediately reduce overfishing in the Northeast (NE) multispecies fishery, while addressing the need to help sustain fishing communities, without compromising rebuilding objectives. Measures proposed for the commercial fishery include the following: A differential days-at-sea (DAS) area north of 41°30′ N. lat., whereby a vessel would be charged 2 days for every day fished; a large Southern New England (SNE) Closure Area; and modified groundfish trip limits. This action does not change the scheduled DAS reduction in the NE Multispecies Fishery Management Plan (FMP), which would result in an approximate 18–percent reduction in DAS. For private recreational vessels fishing in the Exclusive Economic Zone (EEZ) and for federally permitted charter/party vessels, this action would extend in time a seasonal prohibition on the possession of Gulf of Maine (GOM) cod, and prohibit the possession of SNE winter flounder. For federally permitted charter/party vessels, this action would implement a trip limit for Georges Bank (GB) cod. In addition, this action proposes to mitigate some of the negative short-term economic impacts of the FMP by making modifications to the DAS Leasing Program, the Regular B DAS Program, and the DAS Transfer Program; continuing the Eastern U.S./Canada Haddock Special Access Program (SAP); and implementing a reduction in the haddock minimum size to 18 inches (45 cm). Finally, this action would specify management measures for the U.S./Canada Management Area for fishing year (FY) 2009.

DATES: Comments must be received by February 17, 2009.

ADDRESSES: You may submit comments, identified by 0648–AW87, by any one of the following methods:

- Electronic Submissions: Submit all electronic public comments via the Federal e-rulemaking portal: *http://www.regulations.gov*.
- Mail: Paper, disk, or CD-ROM comments should be sent to Patricia A. Kurkul, Regional Administrator, National Marine Fisheries Service, 55 Great Republic Drive, Gloucester, MA 01930–2276. Mark the outside of the envelope:''Comments on NE Multispecies Interim Rule.''
- Fax: (978) 281–9135.

Instructions: All comments received are part of the public record and will generally be posted to *http://www.regulations.gov* without change. All Personal Identifying Information (for example, name, address, etc.) voluntarily submitted by the commenter may be publicly accessible. Do not submit confidential business information or otherwise sensitive or protected information.

NMFS will accept anonymous comments (enter ''N/A'' in the required fields, if you wish to remain anonymous). Attachments to electronic comments will be accepted in Microsoft Word, Excel, WordPerfect, or Adobe PDF formats only.

NMFS prepared an Initial Regulatory Flexibility Analysis (IRFA), which is contained in the Classification section of this proposed rule. Copies of the Environmental Assessment (EA) prepared for this rule may be found at the following internet address: *http://www.nero.noaa.gov/nero/regs/frdoc/08/08MultiInterimEA.pdf.*

FOR FURTHER INFORMATION CONTACT: Thomas Warren, Fishery Policy Analyst, (978) 281–9347, fax (978) 281–9135.

SUPPLEMENTARY INFORMATION: The FMP specifies the management measures for 12 species in Federal waters off the New England and Mid-Atlantic coasts, which are Atlantic cod, haddock, yellowtail flounder, pollock, American plaice, witch flounder, white hake, windowpane flounder, Atlantic halibut, winter flounder, ocean pout, and redfish, comprising a total of 19 individual stocks (groundfish). A major overhaul of the FMP occurred in 2004 with implementation of Amendment 13 and the establishment of rebuilding programs for all stocks managed by the FMP, including specification of status determination criteria for each stock.

Amendment 13 established two different strategies for rebuilding (an adaptive and a phased rebuilding strategy), and a rebuilding plan for each overfished stock was developed in accordance with one of the two strategies. Under the ''adaptive'' rebuilding strategy, fishing mortality is held at Fmsy from 2004 through 2008, and then subsequently reduced to the level required to rebuild by the selected end-date of the rebuilding period. In 2008, the effectiveness of the management measures and the validity of the status determination criteria (biological reference points) were fully evaluated. Eight stocks (GOM cod, GB haddock, GOM haddock, SNE/Mid Atlantic (MA) winter flounder, GB yellowtail flounder, redfish, windowpane flounder (southern stock), and ocean pout) are managed under the adaptive rebuilding strategy. In contrast, under the ''phased'' rebuilding strategy, fishing mortality is allowed to remain above Fmsy at the start of the rebuilding period in 2004, and then reduced sequentially in 2006 and 2009. Five stocks (GB cod, Cape Cod (CC)/GOM yellowtail flounder, SNE/MA yellowtail flounder, American plaice, and white hake) are managed under the phased rebuilding strategy. The end of the rebuilding period for all stocks is 2014, with the exception of GB cod (2026), CC/GOM yellowtail flounder (2023), and redfish (2051).

Amendment 13 also implemented a process whereby the NE multispecies complex is routinely evaluated through a biennial adjustment. This adjustment process provides an update of the scientific information regarding the status of the stocks, and an evaluation of the effectiveness of the regulations. The biennial adjustment provides the New England Fishery Management Council (Council) with information to make adjustments to management measures necessary to modify fishing mortality to comply with the rebuilding schedules and approach optimum yield. The FMP further specified a benchmark stock assessment and review of the biological reference points (stock status determination criteria) in 2008. This planned assessment of the biological reference points (Groundfish Assessment Review Meeting, (GARM III) in 2008) was part of the biennial adjustment process, but was also part of the adaptive rebuilding strategy described above, which sought to evaluate the more fundamental scientific information mid-way through the rebuilding period for most stocks. Although, strictly speaking, the adaptive rebuilding strategy applies to only five stocks, the intent of the Council in scheduling a benchmark assessment in 2008 was an evaluation of the biological reference points for all stocks.

In order to implement these rebuilding strategies, Amendment 13 included default management measures for implementation in FY 2006 and FY 2009, which were designed to reduce fishing mortality on certain stocks, and established criteria to determine conditions under which the default measures would not be triggered. The default measure developed for FY 2009 is a modification to the Category A DAS and Category B DAS ratio from 55:45 to 45:55 (respectively). This decrease in the amount of A DAS represents an 18.2–percent decrease in the number of A DAS a vessel may fish. Amendment 13 noted the challenge of implementing the rebuilding program due to the difficulty of designing effort controls that would precisely achieve the desired fishing mortality reductions for all stocks.

The Council began development of Amendment 16 in 2006 to meet a required May 1, 2009, implementation date because it anticipated that new scientific information from the scheduled 2008 biennial review and benchmark assessment (GARM III) would indicate that additional fishing mortality reductions may be necessary for FY 2009 in order to continue rebuilding at the required rate. At the Council meeting on June 3, 2008, the Northeast Fisheries Science Center (NEFSC) presented preliminary estimates of stock size and fishing mortality in 2006, which indicated that draft effort control measures under development for Amendment 16 were not targeting the correct stocks. Based on this information, the Council decided to wait until receipt of the final GARM III assessment results in September 2008 to design appropriate management measures and hold public hearings.

The Council subsequently developed a revised schedule of development for Amendment 16, which, if approved, would be implemented on May 1, 2010. The Council voted on September 4, 2008, to request that NMFS implement an interim action for the duration of FY 2009 (May 1, 2009–April 30, 2010), and recommended a specific suite of management measures for the interim action. As explained fully under section 12 below, NMFS did not adopt the Council's recommendations for this proposed interim action because it was determined that the Council's recommended alternative was insufficient to end overfishing.

GARM III, completed in August 2008, was an extensive benchmark assessment. GARM III evaluated the

underlying data and models utilized for assessment of the groundfish stocks, evaluated the biological reference points, established new reference points, assessed the biomass and fishing mortality status of the groundfish stocks in 2007, and provided examples of fishing mortality rates that would be expected to rebuild overfished stocks.

Incorporation of new scientific information and revisions to management measures in the FMP, effective May 1, 2009, are necessary to continue rebuilding to comply the intent of the FMP. However, due to the Council's revised Amendment 16 schedule, such revisions to the FMP would not be implemented, without this interim action.

Section 305(c) of the Magnuson-Stevens Act authorizes the Secretary of Commerce (Secretary) to amend an FMP if the appropriate Council fails to develop and submit to the Secretary any necessary amendment to an FMP if the fishery requires conservation and management. NMFS promulgated guidelines to further clarify how this authority to amend an FMP should be interpreted (63 FR 24212; May 1, 1998). The Secretary, on his/her own initiative, or in response to a Council request, may implement interim measures to reduce overfishing under section 305(c), until such measures can be replaced by an FMP amendment or regulations taking remedial action. The measures may remain in place for 180 days, but may be extended for an additional 186 days if the public has had an opportunity to comment on the measures.

Because of the need to eliminate and reduce overfishing, as well as to reduce fishing mortality to more closely comply with the FMP rebuilding schedules, NMFS is proposing this interim action. To that end, this action would implement management measures that, as much as practicable, build upon the Amendment 13 default measures and include major elements of the Council's Amendment 16 alternatives, such as differential DAS. Measures that are similar to Amendment 16 would facilitate industry understanding, enable NMFS to administer such short-term measures, and allow vessels to adapt any measures implemented by Amendment 16 if they are adopted. Further, it is important that NMFS can enforce and administer the interim measures, and that such measures are fair and simple. The proposed interim action management measures are more narrowly focused than what is currently under consideration in the Council's Amendment 16 draft document, which contains measures beyond those designed to reduce fishing mortality, such as inclusion of many new sectors and measures to address new Magnuson-Stevens Act requirements (e.g., annual catch limits and accountability measures). Failure to reduce or prevent overfishing by May 1, 2009, while the Council completes Amendment 16, would likely lead to continued overfishing of several groundfish stocks, resulting in slower rebuilding that would likely require more stringent future measures, with additional economic and social consequences.

A summary of the GARM III results that form the basis for this proposed interim rule is in Table 1 below. Overfishing is occurring on stocks when the fishing mortality to Fmsy ratio (F/Fmsy) is greater than 1.0, and a stock is overfished if the biomass level to Bmsy ratio (B/Bmsy) is equal to or less than 0.5.

TABLE 1. GARM III STOCK STATUS DETERMINATION CRITERIA AND 2007 STATUS

Species	Stock	Fmsy	Bmsy	2007 Fishing Mortality (2007 F/ Fmsy)	2007 Biomass (2007 B/ Bmsy)
Cod	GB	0.2466	148,084	1.2	0.12
	GOM	0.237	58,248	1.9	0.58
Haddock	GB	0.350	158,873	0.49	2.05
	GOM	0.430	5,900	0.8.	0.99
Yellowtail flounder	GB	0.254	43,200	1.1	0.22
	SNE/MA	0.254	27,400	1.6	0.13
	CC/GOM	0.239	7,790	1.7	0.25
American plaice		0.190	21,940	0.5	0.51
Witch flounder		0.200	11,447	1.5	0.30
Winter flounder	GB	0.260	16,000	1.1	0.31
	GOM	0.283	3,792	1.5	0.29
	SNE/MA	0.248	38,761	2.6	0.09
Redfish		0.038	271,000	0.1	0.64
White hake		0.125	56,254	1.2	0.35
Pollock		5.660	2.0	* 1.2	* 0.71
Windowpane	North	0.500	1.4	* 3.9	* 0.38
	South	1.470	0.34	* 1.3	* 0.62
Ocean pout		0.760	4.94	0.5	0.10

TABLE 1. GARM III STOCK STATUS DETERMINATION CRITERIA AND 2007 STATUS—Continued

Species	Stock	Fmsy	Bmsy	2007 Fishing Mortality (2007 F/ Fmsy)	2007 Biomass (2007 B/ Bmsy)
Atlantic halibut		0.073	49,000	0.9	0.03

* Pollock and windowpane flounder information was revised subsequent to GARM III in order to utilize 3 yr averages. Pollock is approaching an overfished condition.

Because GARM III revised the biological reference points and the 2007 stock status determination, and the current status of stocks is different from the understanding of stock status based on GARM I and II, it is necessary to utilize new fishing mortality targets that are appropriate to the revised stock status. Therefore, this interim action would utilize the GARM III revised stock status determination as the basis for developing fishing mortality targets in order to be consistent with National Standard 2, which requires that conservation and management measures shall be based upon the best scientific information available.

New rebuilding plans for those stocks recently determined to be overfished or approaching an overfished condition, based on results from GARM III (windowpane flounder (northern stock), GOM and GB winter flounder, witch flounder, and pollock), are not proposed in this interim action, but rather are being considered by the Council in Amendment 16. For these five stocks, the fishing mortality target of the interim action is proposed to be Fmsy, although, as explained later in this preamble, the proposed measures would not achieve this objective for windowpane north.

For those stocks that are either rebuilt (GB haddock) or for stocks where Fmsy would rebuild the stock (GOM haddock, GOM cod, American plaice, redfish), the fishing mortality target for the interim action would be Fmsy. For these stocks, which are currently in rebuilding programs, Fmsy is the appropriate target fishing mortality rate because Fmsy is lower than Frebuild, and the stocks are projected to rebuild to Bmsy within their rebuilding periods.

For stocks currently under rebuilding programs and for which the fishing mortality rate required to rebuild the stock (Frebuild) is less than Fmsy (GB cod, GB yellowtail, SNE yellowtail, CC yellowtail, SNE winter flounder, white hake), the fishing mortality target under this interim action would be Frebuild, with one exception (noted below).

For GB cod, fishing mortality under this interim action would be reduced to a level less than Fmsy, but would not achieve Frebuild. The two recent stock assessments that pertain to GB cod (GARM III for the entire stock; Transboundary Resource Assessment Committee 2008 for the eastern portion of the stock) were unable to be reconciled with each other, with the assessment of the size of the overall stock relatively low and the assessment of the size of the eastern portion of the stock relatively high. Given the scientific uncertainty, the fact that the fishing mortality of the eastern portion of the stock is strictly controlled through a hard total allowable catch (TAC), and the limited scope of this action, Fmsy is being proposed as the fishing mortality rate target for this stock. However, the fishing mortality rate that would be achieved by the proposed interim action is estimated to be between Fsmy and Frebuild.

GARM III provided example estimates of Frebuild for overfished stocks, making assumptions about the rebuild period end-dates and the starting conditions at the beginning of the rebuilding periods. In doing so, GARM III assumed that the catch in FY 2008 will equal the catch in FY 2007. In contrast, for this interim action, an estimated catch in FY 2008 was used to recalculate the starting conditions in FY 2008, and the Frebuilds. For Amendment 16, the Plan Development Team (PDT) estimated catch for the entire FY 2008 year based upon an extrapolation of landings data for calendar year 2008 through June 2008. This interim action relies on the PDT's estimated landings for FY 2008 and a derived estimate of fishing mortality for Calendar Year (CY) 2008 and the recalculated Frebuilds. The probabilities associated with the Frebuilds and rebuilding end dates are consistent with the current FMP. Stocks would rebuild with a 50–percent probability, with the exception of GB yellowtail flounder, which has a 75–percent probability of rebuilding by the end of the rebuilding period. The end of the rebuilding period for all stocks with rebuilding plans is 2014, with the exception of GB cod (2026), CC/GOM yellowtail flounder (2023), and redfish (2051). Because the measures to be implemented by this action would begin in FY 2009, an estimate of fishing mortality in CY 2008 more closely represents the starting conditions of the remainder of the rebuilding periods. For GB yellowtail flounder, Frebuild was calculated utilizing an assumed catch in CY 2008 of 2,500 mt.

In a similar manner, in order to calculate the amount of reduction in fishing mortality required for pertinent stocks, the estimated fishing mortality in CY 2008 was considered as the starting condition. For example, in order to calculate the required fishing mortality reduction for the CC/GOM stock of yellowtail flounder, Frebuild (0.238) was compared to F 2008 (0.289). An 18–percent reduction in fishing mortality is required to reduce F from 0.289 in CY 2008 to achieve an Frebuild of 0.238 in CY 2009. Table 2 below summarizes information on the CY 2008 fishing mortality, the fishing mortality goal of the interim action, and the percentage fishing reduction objective to reduce fishing mortality from the starting conditions (F 2008) to the fishing mortality rate goal.

TABLE 2. FISHING MORTALITY REDUCTION OBJECTIVES FOR THE PROPOSED INTERIM ACTION

Species	Stock	2008 F	Fishing Mortality Rate Goal	Value Associated with Fishing Mortality Rate Goal	Fishing Mortality Rate Reduction Objective
Cod	GB	0.410	Fmsy	0.2466	- 40 %
	GOM	0.300	Fmsy	0.237	- 21 %

TABLE 2. FISHING MORTALITY REDUCTION OBJECTIVES FOR THE PROPOSED INTERIM ACTION—Continued

Species	Stock	2008 F	Fishing Mortality Rate Goal	Value Associated with Fishing Mortality Rate Goal	Fishing Mortality Rate Reduction Objective
Haddock	GB	0.083	Fmsy	0.350	322 %
	GOM	0.250	Fmsy	0.430	72 %
Yellowtail flounder	GB	0.130	Frebuild	0.109	- 16 %
	SNE/MA	0.120	Frebuild	0.075	-386%
	CC/GOM	0.289	Frebuild	0.238	- 18 %
American plaice		0.099	Fmsy	0.190	92 %
Witch flounder		0.296	Fmsy	0.200	- 32 %
Winter flounder	GB	0.131	Fmsy	0.260	98 %
	GOM	0.317	Fmsy	0.283	- 11 %
	SNE/MA	0.265	Frebuild	0.000	- 100 %
Redfish		0.008	Fmsy	0.038	375 %
White hake		0.065	Frebuild	0.084	29 %
Pollock		NA	Fmsy	5.66	- 48 %
Windowpane		NA	Fmsy	0.50	- 74 %
		NA	Fmsy	1.47	- 21 %
Ocean pout		NA	Fmsy	0.760	NA
Atlantic halibut		0.060	Frebuild	0.044	- 27 %

NA - not available

Proposed Management Measures

All measures in effect prior to May 1, 2009, including the default measures relating to DAS reductions scheduled to go into place and not amended by this proposed interim rule, would remain in effect on and after May 1, 2009. This proposed interim action would implement management measures to reduce fishing mortality on the commercial and recreational fisheries, without compromising rebuilding objectives, as well as revise various management programs in order to mitigate the negative economic and social impacts of the FMP to ensure consistency with National Standards and required provisions of the Magnuson-Stevens Act and to enhance the likelihood of compliance with the measures. Routine specification of TAC and annual specifications for the U.S./Canada Management Area are also proposed. As is more fully discussed later in this document, these measures would result in both quantifiable and non-quantifiable reductions in fishing mortality for virtually all of the NE multispecies stocks managed under the FMP.

The proposed interim measures are designed to work in conjunction with the current FMP to achieve the fishing mortality requirements of the FMP. The analysis of this action presumes that the proposed measures would be in effect throughout FY 2009, and that a subsequent management action (Amendment 16) will be implemented on May 1, 2010. The current FMP management measures include a FY 2009 default measure that will change the allocation ratio of Category A:B DAS from 60:40 to 55:45. This measure, therefore, is not discussed specifically in the description of the proposed interim measures that follows. NMFS anticipates that, if approved and implemented, this interim action may be renewed upon expiration for an additional 185 days, given that the Council does not anticipate the implementation of Amendment 16 until May 2010. The Council also recommended to NMFS that any interim action should be in effect for all of FY 2009. The following measures are proposed to be implemented on May 1, 2009, to reduce overfishing.

Commercial Measures

1. Differential DAS Counting

Under this proposed interim action, the existing differential DAS areas in the GOM and SNE would no longer apply, and a single, larger differential DAS area would be implemented in the entire GOM and in the northern portion of GB, north of 41o 30'N. lat. For the revised Interim Differential DAS Area, the DAS accrual rate would be 2:1. In other words, under this action, if a vessel declares into the Interim Differential DAS Area for 10 hr, the vessel's DAS balance would be debited 20 hr. A vessel would not be charged at the differential DAS rate if it declared and transited to another area outside of the Interim Differential DAS Area. For example, if a vessel steams through the Interim Differential DAS Area on its way to and from the fishing grounds in the southern portion of the U.S./Canada Management Area, where DAS are not counted differentially, it would not be charged at the 2:1 rate for part of the trip spend steaming through the Interim Differential DAS Area. If a vessel declared and fished both inside the Interim Differential DAS Area and

outside that area on the same trip, it would be charged differential DAS (2:1) for all the DAS accrued on that trip.

The interaction of current groundfish and non-groundfish regulatory programs and the different DAS counting rules would remain unchanged under this action (e.g., the cod running clock, Day Gillnet Category rules, the application of per DAS possession limits, the Eastern U.S./Canada Area rules, use of Regular B DAS, and monkfish/groundfish permitted vessels fishing under a NE multispecies DAS). For example, vessels fishing in the Interim Differential DAS Area and the Eastern U.S./Canada Management Area (exclusively) would be charged at the differential DAS rate of 2:1, but would not be charged steaming time to or from the area. For vessels fishing in multiple geographic areas where different rules apply to each area (such as differential DAS and trip limits), the most restrictive rule would apply for the entire trip. The current regulations that allow monkfish Category C and D vessels to fish as a monkfish Category A or B vessel, and land monkfish under certain conditions, would still apply.

As under the current regulations, vessels would be required to declare, prior to leaving port, their intent to fish in the Interim Differential DAS Area, via Vessel Monitoring System (VMS). The VMS declaration screens would be modified slightly to accommodate the fact that the southern border of the Interim Differential DAS Area divides the U.S./Canada Management Area into two portions. For example, a vessel intending to fish in the Eastern U.S./Canada Area would also have to specify whether it would also fish in the Interim Differential DAS Area.

The Interim Differential DAS Area is proposed as a means to reduce fishing mortality on multiple stocks instead of further reductions in DAS allocations in order to provide flexibility for vessel owners.

2. SNE Closure Area

The area in SNE between 40° 30' and 41° 30' N. lat., and west of 68° 30' W. long. to the shore, including Nantucket Sound (30-minute square blocks of 97–107 and 80–90) would be closed to federally permitted groundfish vessels (both open access and limited access) when fishing on groundfish, with the exception of NE multispecies vessels using hook gear, provided such vessels do not retain winter flounder, and provided the vessels have only hook gear on board. This interim rule proposes that groundfish vessels using only hook gear on a particular trip may fish in the SNE Closure Area because the catch rate of winter flounder is likely to be very low. Non-groundfish commercial trips fishing in exempted fisheries (e.g., summer flounder, scallop, and skate exemptions), or using exempted gear, could also fish in the SNE Closure Area. NE multispecies vessels not fishing in the SNE Closure Area would be allowed to transit through the area, provided all fishing gear is properly stowed. The SNE Closure Area is proposed as a means to reduce fishing mortality on SNE winter flounder primarily, but would also reduce fishing mortality on other stocks such as SNE/MA yellowtail flounder.

3. Modified Trip Limits

Under this interim rule, the current white hake possession limit of 1,000 lb (454 kg) per DAS would be increased to 2,000 lb (907 kg) per DAS, with the same maximum of 10,000 lb (4,536 kg) per trip, and the trip limit for GB winter flounder, currently 5,000 lb (2.268 kg) per trip, would be removed. No retention of any fish would be allowed for SNE winter flounder, northern windowpane flounder, or ocean pout. Vessels fishing for winter flounder or windowpane flounder in multiple stock areas would be subject to the most restrictive possession limit for the pertinent species. In other words, if a vessel fishes in the SNE winter flounder stock area and the GB winter flounder stock area on the same trip, the vessel would be subject to the prohibition on retention for that trip. Lastly, as explained further under item 7 (''Annual Specifications for U.S./Canada Management Area''), a limit of 5,000 lb (2,268 kg) of GB yellowtail flounder per trip would be specified. Modifications to trip limits are proposed as a means to reduce fishing mortality or increase yield because they are a management tool that can effectively target particular stocks and are an important component of the current FMP.

4. Specification of Target TACs

Target TACs are utilized in the FMP as one method of evaluating the success of management measures and providing a way to make simple comparisons between different fishing years. Secondly, target TACs form the basis of calculating allocations of GB cod to sectors, and the basis of calculating the incidental catch TACs for the Special Management Programs. Table 3 lists the target TACs for FY 2009, based upon GARM III data and estimated CY 2008 fishing mortalities.

TABLE 3. TARGET TACS (MT) FOR FY 2009

Species	Stock	Target TAC
Cod	GB	3,506
Cod	GOM	10,327
Haddock	GB	86,520
Haddock	GOM	1,564
Yellowtail flounder	GB	1,617
Yellowtail flounder	SNE/MA	389
Yellowtail flounder	CC/GOM	860
Plaice		3,214
Witch flounder		928
Winter flounder	GB	2,004
Winter flounder	GOM	379
Redfish		8,614
White hake		2,376
Pollock		6,486
Windowpane flounder N.		299
Windowpane flounder S.		338
Halibut		68

* A hard TAC, set through a separate process described in item 6.

5. Revisions to Incidental Catch TACs and Allocations to Special Management Programs

This proposed interim action would revise the specification of incidental catch TACs applicable to the Special Management Programs of the FMP based upon the most recent scientific information. Incidental catch TACs are specified for certain stocks of concern for Special Management Programs in order to limit the amount of catch of stocks of concern that can be caught under such programs, and to fully account for fishing mortality. The incidental catch TACs apply to catch (landings and discards) caught under Category B DAS (either Regular or Reserve B DAS) on trips that end on a Category B DAS. The catch of stocks for which incidental catch TACs are specified on trips that start under a Category B DAS and then flip to a Category A DAS do not accrue toward such TACs.

A stock of concern is defined as a stock that is in an overfished condition or subject to overfishing. Due to the revised status of stocks (GARM III) that would be adopted under this action, an incidental catch TAC would no longer be appropriate for American plaice, because it would no longer be considered a stock of concern. Further, new incidental catch TACs would be required for GOM winter flounder and pollock, because they would now be considered stocks of concern. The percentages that the TACs are currently based on would remain unchanged, with the exception of witch flounder, which would be reduced from 5–percent to 2–percent, due to its new proposed status and the fact that the fishing mortality rate and total catch need to be reduced. The incidental catch TACs for GOM winter flounder would be set at 5–percent, based on the rationale described in Framework (FW) 40A to the FMP: If the recent catch levels are less than the expected future catch levels, and proposed management measures are likely to achieve more than the required reduction in fishing mortality, then the size of an incidental catch TAC relative to the size of the overall TAC is larger (set as a larger percent). The incidental catch TAC for pollock would be set at 5–percent because of the prevalence of pollock catch in the Special Management Programs, and based upon the rationale cited above. The utility of the Special Management Programs would be severely constrained if the incidental catch TAC is set too low. The number of total incidental catch TACs would increase from the current number (8), to 10. Due to the severe fishing mortality reduction necessary for the SNE/MA stock of winter flounder, no retention of this stock would be allowed under this alternative, and there would be no incidental catch TAC specified (see additional discussion under item 10, Mitigating Measures). The calculation of incidental catch TACs by stock based on the target TACs is shown in Table 4.

TABLE 4. INCIDENTAL CATCH TACS FOR FY 2009

Stock	Percentage of Total TAC	Initial TAC	Incidental TAC
GB cod	2	3,506	70.1
GOM cod	1	10,327	103.3
GB yellowtail	2	1,617	32.3
CC/GOM yellowtail	1	860	8.6
SNE/MA yellowtail	1	389	3.9
Pollock	5	6,486	324.3
Witch flounder	2	928	18.6
GB winter flounder	2	2,004	40.1
White hake	2	2,376	47.5
GOM winter	5	379	19.0

This proposed rule would also modify the allocation of the incidental catch TACs to the various Special Management Programs due to the change in status of stocks, as well as to optimize the design of the programs based on the operation of the programs since their inception. For example, the Eastern U.S./Canada Haddock SAP was not used at all in FY 2007, and only two trips were taken in the area in FY 2006. Therefore, the percent allocations to this SAP would be reduced for GB cod, GB yellowtail, and GB winter flounder, and the percent allocation to the Regular B DAS Program would be increased due to higher participation in that program historically. Secondly, this rule would provide the Administrator, Northeast Region, NMFS (Regional Administrator) the authority to modify the allocations among programs in-season, or prior to the beginning of the season, because it is difficult to estimate the appropriate TAC since the level of participation and rate of catch of stocks of concern in the various programs is highly variable. The proposed changes to the allocations are summarized in Table 5. Table 6, contains the incidental catch TACs that result from applying the percentages in Table 5 to the incidental TACs in Table 4.

TABLE 5. MODIFICATIONS TO THE INCIDENTAL CATCH TAC ALLOCATIONS FOR FY 2009

	Regular B DAS Program		Eastern U.S./Canada Haddock SAP		Closed Area I Hook Gear Haddock SAP	
Stock	Current	New	Current	New	Current	New
GB Cod	50 %	70 %	34 %	14 %	16 %	no change
GB Yellowtail flounder	50 %	80 %	50 %	20 %		
GB Winter flounder	50 %	80 %	50 %	20 %		
Pollock	none	90 %	none	5 %	none	5 %

TABLE 5. MODIFICATIONS TO THE INCIDENTAL CATCH TAC ALLOCATIONS FOR FY 2009—Continued

Stock	Regular B DAS Program		Eastern U.S./Canada Haddock SAP		Closed Area I Hook Gear Haddock SAP	
	Current	New	Current	New	Current	New
GOM Winter flounder	none	100 %				
GOM Cod	100 %	100 %				
White hake	100 %	100 %				
CC/GOM Yellowtail flounder	100 %	100 %				
SNE/MA Yellowtail flounder	100 %	100 %				
Witch flounder	100 %	100 %				
Plaice	100 %	none				

TABLE 6. SPECIFICATION OF INCIDENTAL CATCH TACS FOR SPECIAL MANAGEMENT PROGRAMS (MT) FOR FY 2009

Stock	Regular B DAS Program	Eastern U.S./Canada Haddock SAP	Closed Area I Hook Gear Haddock SAP
GB Cod	49.1	9.8	11.2
GOM Cod	103.3	na	na
GB Yellowtail flounder	25.9	6.5	na
CC/GOM Yellowtail flounder	8.6	na	na
SNE/MA Yellowtail flounder	3.9	na	na
Pollock	291.9	16.2	16.2
Witch flounder	18.6	na	na
GB Winter flounder	32.1	8.0	na
White hake	47.5	na	na
GOM Winter flounder	19.0	na	na

6. Annual Specifications for U.S./Canada Management Area

In consultation with the Council, NMFS annually implements management measures for the U.S./Canada Management Area through proposed and final rules. For FY 2009, because NMFS will also be proposing management measures for the entire fishery to reduce fishing mortality as described above and expects to implement measures for the entire FY 2009, NMFS is including the specification of the TACs and other measures for the U.S./Canada Management Area in this proposed rule in order to streamline the regulatory process.

The FMP specifies a procedure for setting annual hard TAC levels (i.e., the fishery or area closes when a TAC is reached) for Eastern GB cod, Eastern GB haddock, and GB yellowtail flounder in the U.S./Canada Management Area. The regulations governing the annual development of TACs were implemented by Amendment 13 to the FMP in order to be consistent with the U.S./Canada Resource Sharing Understanding (Understanding), which is an informal (i.e., non-binding) understanding between the Northeast Region of NMFS and the Maritimes Region of the Department of Fisheries and Ocean of Canada (DFO) that outlines a process for the management of the shared GB groundfish resources. The Understanding specifies an allocation of TAC for these three stocks for each country, based on a formula that considers historical catch percentages and current resource distribution.

Annual TACs are determined through a process involving the Council, the Transboundary Management Guidance Committee (TMGC), and the U.S./Canada Transboundary Resources Steering Committee. In September 2008, the TMGC approved the 2008 Guidance Document for Eastern GB cod, Eastern GB haddock, and GB yellowtail flounder, which included recommended U.S. TACs for these stocks. The recommended FY 2008 TACs were based upon the most recent stock assessments TRAC Status Reports for 2008), and the fishing mortality strategy shared by both NMFS and DFO. The strategy is to maintain a low to neutral (less than 50–percent) risk of exceeding the fishing mortality limit reference (Fref = 0.18, 0.26, and 0.25 for cod, haddock, and yellowtail flounder, respectively). When stock conditions are poor, fishing mortality rates should be further reduced to promote rebuilding.

The TMGC concluded that the most appropriate combined U.S./Canada TAC for Eastern GB cod for FY 2009 is 1,700 mt. This corresponds to a low risk (less than 25- percent) of exceeding the Fref of 0.18 (i.e., Fmsy) in 2009. However, due to poor recruitment, there is a high risk (greater than 75–percent) that stock biomass will not increase from CY 2009 to CY 2010. The annual allocation shares between countries for FY 2009 are based on a combination of historical catches (15–percent weighting) and resource distribution based on trawl surveys (85–percent weighting). Combining these factors entitles the United States to 31–percent of the shared TAC and Canada to 69- percent, resulting in a national quota of 527 mt for the United States and 1,173 mt for Canada.

For Eastern GB haddock, the TMGC concluded that the most appropriate combined U.S./Canada TAC for FY 2009 fishing year is 30,000 mt. This represents a low to neutral risk (greater than 25–percent but less than 50–percent) of exceeding the Fref of 0.26. Adult biomass is projected to peak at 158,000 mt in CY 2008 (reflecting the recruitment and growth of the exceptional 2003 year class), and decline to 131,000 mt in 2010. The annual allocation shares between countries for FY 2009 are based on a combination of historical catches (15–percent weighting) and resource distribution based on trawl surveys (85–percent weighting). Combining these factors entitles the United States to 37–percent of the shared TAC and Canada to 63–percent, resulting in a national quota of 11,100 mt for the United States and 18,900 mt for Canada.

For GB yellowtail flounder, the TMGC concluded that the most appropriate combined U.S./Canada TAC for the 2009 fishing year is 2,100 mt. This corresponds to an F of 0.11, lower than the Fref of 0.25, and is consistent with the fishing mortality required to rebuild GB yellowtail flounder by 2014. With a catch of 2,100 mt in 2009, the age 3+ biomass is expected to increase by about 21–percent. The annual allocation shares between countries for 2008 are based on a combination of historical catches (15–percent weighting) and resource distribution based on trawl surveys (85–percent weighting). Combining these factors entitles the U.S. to 77–percent of the shared TAC and Canada to 23–percent, resulting in a national quota of 1,617 mt for the U.S. and 483 mt for Canada.

On October 8, 2009, the Council approved, consistent with the 2008 Guidance Document, the following U.S./TACs recommended by the TMGC: 527 mt of Eastern GB cod; 11,100 mt of Eastern GB haddock; and 1,617 mt of GB yellowtail flounder. The proposed 2009 fishing year TACs for the U.S./Canada Management Area represent a decrease for cod and yellowtail flounder, and an increase for haddock compared with those specified for the 2008 fishing year (Tables 7 and 8).

TABLE 7. 2009 U.S./CANADA TACS (MT) AND PERCENTAGE SHARES (IN PARENTHESES)

	GB Cod	GB Haddock	GB Yellowtail Flounder
Total Shared TAC	1,700	30,000	2,100
U.S. TAC	527 (31%)	11,100 (37%)	1,617 (77%)
Canada TAC	1,173 (69%)	18,900 (63%)	483 (23%)

TABLE 8. 2008 U.S./CANADA TACS (MT) AND PERCENTAGE SHARES (IN PARENTHESES)

	GB Cod	GB Haddock	GB Yellowtail Flounder
Total Shared TAC	2,300	23,000	2,500
U.S. TAC	667 (29%)	8,050 (35%)	* 1,950 (78%)
Canada TAC	1,633 (71%)	14,950 (65%)	550 (22%)

* Adjusted downward to 1,868.7 mt due to overharvest of 2007 TAC

The 2009 TACs are based upon stock assessments conducted in June 2008 by the TRAC. The proposed TACs are consistent with the results of the TRAC and the TMGC's harvest strategy, as well as the GB yellowtail flounder rebuilding plan implemented by FW 42. The regulations for the Understanding, promulgated by the final rule implementing Amendment 13, state that ''Any overages of the GB cod, haddock, or yellowtail flounder TACs that occur in a given fishing year will be subtracted from the respective TAC in the following fishing year.''

Therefore, should an analysis of the catch of the shared stocks by U.S. vessels indicate that an over-harvest occurred during FY 2008, the pertinent TAC would be adjusted downward in order to be consistent with the FMP and Understanding. Although it is very unlikely, it is possible that a very large over-harvest could result in an adjusted TAC of zero. If an adjustment to one of the FY 2008 TACs of cod, haddock, or yellowtail flounder is necessary, the public will be notified through publication in the **Federal Register** and through a letter to permit holders.

NMFS is also proposing, through the authority granted to the Regional Administrator by the FMP, measures to optimize the harvest of the shared resources. The regulations under § 648.85(a)(3)(iv)(D) provide the Regional Administrator the authority to implement in-season adjustments to various measures in order to prevent over-harvesting, or to facilitate achieving the TAC.

Based on the Council's vote to postpone the opening of the Eastern U.S./Canada Area for vessels fishing with trawl gear in FY 2008 from May 1, 2008, to August 1, 2008, and the success of this management measure in slowing the annual catch rate of cod during the early part of the year, NMFS is proposing this same measure for FY 2009. Thus, the FY 2009 opening of the Eastern U.S./Canada Area for trawl vessels would be postponed from May 1, 2009, until August 1, 2009, while allowing more selective longline gear access during May through July. Such vessels would be limited to a cod catch of 5–percent of the cod TAC, or 26.4 mt of cod. The objective of the proposed action is to prevent trawl fishing in the Eastern U.S./Canada Area during the time period when cod bycatch is likely to be very high. The goal of this measure is to prolong access to this area in order to maximize the catch of available cod, haddock, and yellowtail flounder.

Secondly, the Regional Administrator is proposing implementation of a possession limit of 5,000 lb (2,268 kg) per trip for GB yellowtail flounder. Although the regulations under § 648.86(a)(3)(iv)(C) indicate an initial

trip limit of 10,000–lb (4,536 kg) at the beginning of a fishing year for GB yellowtail flounder, based on the yellowtail flounder catch rate from the U.S./Canada Management Area under a 5,000–lb (2,268–kg) trip limit during FY 2008, and analyses conducted by NMFS during FY 2007, a 5,000–lb (2,268–kg) trip limit would be an appropriate trip limit to allow harvesting of the TAC and increase the likelihood that further restrictions will not be necessary during the fishing year to slow the catch rate.

Third, the Regional Administrator is proposing to allow the use of the Ruhle Trawl in the Eastern U.S./Canada Area. Under current regulations, only a flounder net and the haddock separator trawl are permanently authorized for such use. The trawl, which is a modified trawl that substantially reduces the catch rate of most stocks of concern, was approved for use in the Regular B DAS Program and the Eastern U.S/Canada Haddock SAP (73 FR 40186, July 14, 2008). Approval of the use of the Ruhle trawl in the Eastern U.S./Canada Area would provide another alternative for trawl vessel operators and, therefore, provide additional flexibility. As detailed in the July 14, 2008 rule, the Ruhle trawl has been demonstrated to substantially reduce catch of many species of groundfish, and therefore its use would be consistent with the management objectives for the Eastern U.S./Canada Area.

Lastly, the Regional Administrator is proposing zero trips into the Closed Area (CA) II Yellowtail Flounder SAP during FY 2009, based on a determination that the available TAC of GB yellowtail flounder is insufficient to support a minimum level of fishing activity within the CA II SAP. The Regional Administrator has the authority to determine the allocation of the total number of trips into the CA II SAP based upon several criteria, including: GB yellowtail flounder TAC level and the amount of GB yellowtail flounder caught outside of the SAP. As implemented by FW 40B, zero trips to this SAP should be allocated if the available GB yellowtail flounder catch is not sufficient to support 150 trips with a 15,000–lb (6,804–kg) trip limit (i.e., if the available GB yellowtail flounder catch is less than 1,021 mt). This calculation takes into account the projected catch from the area outside of the SAP. Based on the estimate for catch outside of the SAP utilized for FY 2008 (1,376 mt), and the proposed GB yellowtail flounder TAC for FY 2009 (1,617 mt), there is insufficient available catch to allow the SAP to proceed (i.e., 1,617—1,376 = 241; 241 < 1,021 mt).

7. Haddock TAC for CA I Hook Gear Haddock SAP

Under this action, a haddock TAC for the CA I Hook Gear Haddock SAP would be specified based upon the GARM III stock assessment and a formula implemented in FW 42. The haddock TAC in a particular year is based upon the TAC that was specified for the SAP in 2004 (1,130 mt), and scaled according to the size of the exploitable biomass of western GB haddock compared to the biomass size in 2004 (35,317 mt). The size of the western component of the GB haddock stock is estimated as 35–percent of the size of the total GB haddock stock. Therefore, if the 2007 exploitable biomass of haddock is 321,870 mt, the formula and resultant TAC would be as follows: ((.35)(321,870)/35,317) x 1,130 = 3,604.5 mt.

8. Elimination of the SNE/MA Winter Flounder SAP

The SNE/MA Winter Flounder SAP currently allows a limited access NE multispecies vessel fishing for summer flounder west of 72° 30' W. long. to retain up to 200 lb (91 kg) of winter flounder while not under a NE multispecies DAS, provided the vessel complies with various restrictions. Due to the severely depleted status of SNE/MA winter flounder, and the goal of reducing fishing mortality to as close to zero as practicable, this SAP would be eliminated. Because the SAP could enable limited targeting of winter flounder, elimination of the SAP may prevent some catch of winter flounder from occurring.

9. Elimination of the State Waters Winter Flounder Exemption

The State Waters Winter Flounder Exemption currently allows vessels issued a NE multispecies permit to fish in state waters for winter flounder using gear with mesh smaller than required for other vessels in the fishery (provided various requirements and criteria are met). Due to the severely depleted status of the SNE/MA winter flounder stock, and the goal of reducing fishing mortality to as close to zero as practicable, this SAP would be eliminated. Because the SAP could enable limited targeting of winter flounder, elimination of the SAP may prevent some catch of winter flounder from occurring.

10. Mitigating Measures

Reduction of Haddock Minimum Size. Under this interim action, the haddock minimum size would be reduced to 18 inches (45 cm) for both the commercial and recreational fisheries in order to increase yield and decrease bycatch (as defined by the Magnuson-Stevens Act). Information from GARM III indicates that the GB stock is very large and is rebuilt, while the GOM stock is 99–percent rebuilt. Furthermore, a portion of the large 2003 year class of haddock is still below the current 19–inch (47.5-cm) minimum size. A reduced minimum size for haddock would allow vessels to retain additional haddock, thereby increasing yield for this species. Other recreational measures are described under item 11.

Extension of the Eastern U.S./Canada Haddock SAP. The Eastern U.S./Canada Haddock SAP, which is set to expire at the end of FY 2008 on April 30, 2009, would be extended through this proposed interim action, in order to continue to facilitate access to GB haddock. This SAP allows vessels fishing with trawl gear to fish in a portion of the Eastern U.S./Canada Area, including a section of the northern portion of CA II (the ''triangle''), under a Regular B DAS or a Reserve B DAS. This SAP allows a vessel to utilize a Category B DAS and fish in the ''triangle'' that is not otherwise accessible. The geographic area would remain unchanged, and the rules that apply would remain unchanged, with the exception of the reallocation of the incidental catch TACs (see Table 5).

When fishing in this SAP, vessels must currently fish with either a haddock separator trawl or a Ruhle Trawl, and are subject to restrictive possession limits in order to provide an incentive to correctly use the specialized trawl gear to help minimize bycatch of stocks of concern. Catch of stocks of concern on trips that end under a B DAS count toward the incidental catch TACs specified for pollock, GB cod, GB winter flounder, and GB yellowtail flounder (see Table 6). The total amount of these stocks of concern caught is limited by these incidental catch TACs and the program is typically subject to a higher level of observer coverage than the NE multispecies fishery at large. Furthermore, there are specialized rules that are required when fishing in this SAP, including those regarding observer notification, VMS declaration, reporting requirements, and a no discard provision.

Modifications to the Regular B DAS Program. The Regular B DAS Program was designed to provide opportunities to target healthy stocks without threatening stocks for which a mortality reduction is required. The program allows the use of Regular B DAS, provided the Program requirements designed to minimize impacts of stocks

of concern are met. Under this proposed rule, in addition to the modifications proposed under item 5 (Revisions to Incidental Catch TACs and Allocations to Special Management Programs), several revisions would be made to the Regular B DAS Program in order to address the current status of stocks and necessary reductions to fishing mortality, as well as to maintain the usefulness of the Regular B DAS Program. Under current regulations, the Regional Administrator has the authority to close the Regular B DAS Program if it is projected that continuation of the Regular B DAS Program would undermine the achievement of the objectives of the FMP. In addition to monitoring the incidental TACs proposed under item 5, NMFS would closely monitor the level of discarding of stocks that are proposed to have zero retention, but for which there is no incidental TAC proposed (i.e., SNE/MA winter flounder, northern windowpane flounder, and ocean pout) to ensure that fishing mortality objectives for all stocks are not jeopardized.

In order to prevent the quarterly incidental catch TACs from limiting the usefulness of the program, any quarterly incidental catch TAC that remains uncaught from quarters one, two, and three would roll over into the subsequent quarter.

Due to the number of flatfish stocks that need reductions in fishing mortality, the use of low profile (tie-down) gillnets under this interim action would be prohibited on trips fishing under the Regular B DAS Program. Within the NE multispecies fishery, flatfish are traditionally targeted by reducing the vertical height of bottom-set gillnets by tying the floatline of a gillnet to the leadline, or modifying the construction of the floatline to reduce or eliminate its buoyancy. Thus, because most stocks of concern are flatfish and targeting stocks of concern is not consistent with the goals of the Regular B DAS Program, the use of low profile gillnet gear would be prohibited under this Program. The use of gillnet gear to catch haddock would still be allowed.

Under current regulations, when 100 percent of the Incidental Catch TAC for white hake has been harvested, vessels fishing under a Regular B DAS are prohibited from retaining white hake. This is in contrast to the rules pertaining to the other Incidental Catch TACs in the Regular B DAS Program, whereby when the TAC is projected to be harvested, the use of Regular B DAS are prohibited in the pertinent stock area for the duration of the quarter. This proposed interim rule would treat pollock and witch flounder in the same manner as white hake. Therefore, when 100 percent of the Incidental Catch TAC for white hake, pollock, or witch flounder has been harvested, vessels fishing under a Regular B DAS would be prohibited from retaining white hake, pollock, or witch flounder, respectively. Because white hake, pollock, and witch flounder have stock areas that cover the GOM, GB, and SNE/MA areas, if the harvest of the TAC were to trigger a shutdown of the pertinent stock area, the entire Regular B DAS Program would be shut down. The Regional Administrator would be provided the authority to modify the pertinent possession restriction, or implement other measures, including a partial closure for the Regular B DAS Program, in order to prevent excessive discarding of the stock.

DAS Leasing Program Modifications. Under this proposed rule, the current prohibition on leasing DAS between sector and common pool vessels would be eliminated in order to increase flexibility and efficiency in the DAS leasing market. Secondly, the limit on the maximum number of DAS that a vessel sector and common-pool vessels may lease would be eliminated. Amendment 13 implemented a restriction that a lessee may lease Category A DAS in an amount up to the vessel's FY 2001 allocation (excluding carry-over DAS from the previous year, or additional DAS associated with obtaining a Large Mesh permit). This restriction would be removed in order to increase flexibility and efficiency in the DAS leasing market. These mitigation measures, including the DAS Transfer Program modifications described below, would also enhance the likelihood of compliance with the measures by providing additional fishing opportunities.

DAS Transfer Program Modifications. Under this proposed rule, the DAS conservation tax would be removed from the DAS Transfer Program. Specifically, the mandatory reduction of Category A and B DAS (20 percent), and Category C DAS (90 percent), would no longer apply when vessels participate in the DAS Transfer Program. The Council, is expected to propose modifications to the DAS Transfer Program in Amendment 16 in order to provide an additional incentive to permanently transfer groundfish DAS, provide for parity of the DAS Transfer Program with the DAS Leasing Program, facilitate consolidation of permits, and provide flexibility for vessels to mitigate the negative impacts of DAS reductions and other management measures. NMFS is proposing this temporary modification to the program for the same reasons the Council is expected to propose such changes. The limited duration of the tax-free period (due to the limited duration of the proposed interim action) would limit the amount of any effect the change may have on increasing the overall DAS use rate. NMFS is not proposing a DAS tax refund, because it would be counter to the regulations that have been in place.

11. Recreational Measures

This action proposes to reduce fishing mortality on the GOM cod, GB cod, and SNE winter flounder fisheries for private recreational vessels fishing in the EEZ and for federally permitted charter/party vessels, commensurate with the reduction proposed for the commercial fishery. Following are the recreational measures proposed under this action: The current seasonal prohibition on the possession of GOM cod for both private recreational and charter/party vessels would be extended from its current duration of November through March, to November through April 15. Secondly, this action would implement a GB cod trip limit of 10 cod per person per day for charter/party vessels, consistent with the GB cod trip limit for private recreational vessels. Retention of winter flounder caught in the SNE/MA stock area would be prohibited for both private recreational and charter/party vessels. Recreational vessels in possession of winter flounder caught outside of the SNE/MA winter flounder stock area could transit this area, provided all bait and hooks are removed from fishing rods, and any winter flounder on board has been gutted and stored. Lastly, as a mitigation measure as further described above, the minimum size for haddock caught by recreational vessels fishing in the EEZ and federally permitted charter/party vessels would be reduced to 18–inches (45.7–cm).

12. Council's Recommended Measures for Interim Action Considered, but Rejected

At it's September 4, 2008, meeting, the Council recommended that NMFS implement an interim action for the duration of FY 2009 and proposed specific management measures. The Council's alternative proposed an 18–percent default DAS reduction; and target TACs for GB yellowtail flounder, SNE/MA yellowtail flounder, CC/GOM yellowtail flounder, American plaice, witch flounder, GB winter flounder, GOM winter flounder, redfish, white hake, pollock, GB cod, and GOM cod. The Council's proposed TACs were those associated with Frebuild for all

stocks except for the two cod stocks, which would be the TACs associated with Fmsy, and the TAC for SNE/MA winter flounder, which would be lower than that associated with Fmsy. The Council's proposal also included a 5,000–lb (2,268–kg) trip limit for SNE/MA winter flounder, and a 1,000–lb (454–kg)/DAS and 5,000–lb (2,268–kg)/trip limit for witch flounder. TAC overharvests in FY 2009 would be deducted from the FY 2010 TACs, and sectors would not be held responsible for FY 2009 over-harvests that they were not responsible for. Amendment 16 was proposed as the means by which the FY 2009 TAC overharvests would be reconciled in FY 2010.

In addition, the Council recommended mitigation measures, as follows: An 18–inch (45–cm) haddock minimum fish size; extension of the Eastern U.S./Canada Haddock SAP; expansion of the CA I Hook Gear Haddock SAP; removal of the DAS Transfer Program's conservation tax; and removal of the restriction that prohibits sector members from leasing to and from common pool vessels.

Although, for some stocks, the appropriate amount of catches in FY 2009 (i.e., the projected TACs associated with Fmsy or F rebuild) would be similar to or larger than recent catch levels, because of the large fishing mortality reductions necessary to end overfishing NMFS has determined that the Council's recommended measures to reduce fishing mortality are insufficient to meet NMFS' objectives.

To estimate the amount of fishing mortality that can be expected from a given allocation of DAS, NMFS utilizes the Closed Area Model (CAM), which incorporates multiple factors, and provides indications of relative changes in fishing exploitation. NMFS could not adopt the Council's alternative because CAM analyses of a similar alternative (i.e., the no action alternative), indicated that fishing mortality reductions would be insufficient for a number of stocks (7 of 11 requiring fishing mortality reductions). Even if the trip limits associated with the Council's alternative achieved the witch flounder objective, the fishing mortality associated with six stocks would have been excessive. Further, deductions of TAC overharvests in the subsequent fishing year would compound the challenge of rebuilding stocks (depending upon the biomass trend, stock structure, and recruitment) in the time required by the Magnuson-Stevens Act and the FMP. Finally, an interim action cannot implement measures that would go into place in a subsequent fishing year, such as a TAC deduction for over-harvest that could occur in 2009, because of the statutory limitations on its duration.

NMFS explored whether the Council's recommended measures could be modified to meet the objectives of the interim action, and developed a hard TAC alternative in order to reduce the risk that appropriate catch levels would be exceeded. As detailed in the EA developed for this proposed action, NMFS ultimately rejected the hard TAC alternative for two principal reasons: 1) It is likely that the TACs for at least two stocks (GB cod and pollock) would have resulted in fishery closures relatively early in each trimester, thereby causing severe economic costs to the industry; and 2) the complexity of a hard TAC management system and the associated cost and difficulties in its implementation to both the fishing industry and NMFS would make it impractical to successfully implement in the short period of an interim action and possibly inconsistent with Magnuson-Stevens Act National Standards and required provisions.

This proposed interim action would adopt the following mitigation measures proposed by the Council: Extension of the Eastern U.S./Canada Haddock SAP; revision of the DAS Leasing Program; revision of the DAS Transfer Program; and reduction of the haddock minimum size limit.

NMFS considered but rejected the Council's Amendment 16 proposed mitigating measures that would modify the CA I Hook Gear Haddock SAP, and the extension of the CA II Yellowtail Flounder SAP to include haddock. The Amendment 16 proposal to modify the CA I Hook Gear Haddock SAP would expand the geographic and temporal scope of the SAP. The expansion of the CA I Hook Gear Haddock SAP is not supported by relevant research. The data relied upon for the approval of the CA I Hook Gear Haddock SAP in FW 40A were from the months of October through December. These data supported the determination that the SAP would have minimal impacts on stocks of concern (notably cod). In contrast, the SAP, as expected to be proposed in Amendment 16, would be open for a 9-month period from May through January. NMFS is unaware of pertinent research that would support the conclusion that the expansion would have minimal impacts on stocks of concern. Although the expansion of the SAP may provide some mitigating effect for some members of the fishery, only one gear type would be affected and the measures would represent an expansion of effort into a closed area. Such an expansion may not be fully consistent with the intent of this action.

Similarly, the Council's proposal for the CA II Yellowtail Flounder SAP, which would allow targeting of either haddock or yellowtail flounder in this area, would represent a major modification to this SAP. NMFS is unaware of pertinent research that would support the conclusion that the expansion would have minimal impacts on stocks of concern. Therefore, the Council's proposed SAP modification may have potential adverse impacts on stocks of concern, and could undermine the utility of CA II.

Classification

Because this action is a proposed rule, at this time, NMFS has not made a final determination that the interim measures that this proposed rule would implement are consistent with the national standards of the Magnuson-Stevens Act and other applicable laws. NMFS, in making this final determination, will take into account the data, views, and comments received during the comment period.

This proposed rule has been determined to be significant for the purposes of Executive Order (E.O.) 12866.

This proposed rule does not contain policies with Federalism or ''takings'' implications as those terms are defined in E.O. 13132 and E.O. 12630, respectively. This proposed rule does not contain any new recordkeeping or reporting requirements.

NMFS prepared an IRFA as required by section 603 of the Regulatory Flexibility Act (RFA). The IRFA describes the economic impact this proposed rule, if adopted, would have on small entities. A description of the action, why it is being considered, and the legal basis for this action are contained in the preamble to this proposed rule and in the Executive Summary and Background (Section 3.0) of the EA prepared for this action.

As described above, this action is necessary to comply with the fish stock rebuilding requirements of the FMP and the Magnuson-Stevens Act. In response to new scientific information, this action would reduce fishing mortality on all groundfish stocks and provide flexibility to the fishing industry to adapt to the new regulations and help mitigate negative economic impacts. The principal goal of this interim action is to eliminate or reduce overfishing and achieve the rebuilding fishing mortality rates to the extent practicable for an interim period, while the Council develops more comprehensive, permanent measures. The Preferred Alternative would achieve an appropriate balance of short-term costs

and benefits that would strictly maintain adherence to rebuilding plans for most stocks, and reduce fishing mortality to Fmsy or below for all stocks except northern windowpane flounder.

NMFS fully analyzed and considered three principal alternatives (plus the No Action Alternative), and considered, but did not fully analyze, several additional alternatives characterized as considered but rejected. Alternative 1 relies upon an 18–percent DAS reduction combined with two different configurations of differential DAS areas; Alternative 2 is based upon a 40–percent DAS reduction; and Alternative 3, the Preferred Alternative relies on an 18–percent DAS reduction and one large differential DAS area. Fishing mortality reductions for all three alternatives include management measures for the commercial and recreational portions of the fishery. The No Action Alternative consists of the management measures currently in effect for the FMP, as well as the May 1, 2009, default measures specified under Amendment 13. Under the default measures, Category A DAS would be reduced by approximately 18–percent, and all other management measures would remain the same. Under all alternatives (except the No Action Alternative) the trip limit for white hake would be modified from 1,000–lb (454- kg) per DAS, to 2,000–lb (907–kg) per DAS (with the maximum per trip remaining at 10,000–lb (4,536–kg)); the current trip limit of 5,000–lb (2,268–kg)/trip for GB winter flounder would be removed; and the retention of ocean pout, SNE winter flounder, and the northern stock of windowpane flounder would be prohibited. Also, under all alternatives, a SNE Closure Area is being proposed to protect SNE winter flounder. Furthermore, the two current regulatory programs that allow vessels to retain winter flounder (that would otherwise be prohibited from retaining winter flounder) would be eliminated, i.e., the SNE Winter Flounder SAP and the State Waters Winter Flounder Exemption.

The following measures for the recreational sector would be implemented under the Preferred Alternative, as well as the other two principal alternatives considered: The current seasonal prohibition on the retention of GOM cod (for both private recreational vessels fishing in the EEZ and federally permitted party/charter vessels) would be lengthened by 2 weeks, with the resulting seasonal closure of November through April 15; persons fishing on federally permitted party/charter vessels would be prohibited from possessing more than 10 cod per day (caught anywhere), a more restrictive limit than the current limit of 10 cod per day when fishing only in the GOM; and private recreational vessels fishing in the EEZ and federally permitted party/charter vessels would not be allowed to retain SNE winter flounder.

In addition, the following mitigation measures would be implemented under the proposed rule and other alternatives considered: The DAS Transfer Program would be modified to remove the DAS tax on transferred DAS; the Eastern U.S./Canada Haddock SAP, which is scheduled to expire, would be renewed; the DAS Leasing Program rules would be modified to remove the cap on the number of DAS that can be leased and to allow leasing between sector and common pool vessels; the minimum size for haddock would be reduced from 19 inches (47.5 cm) to 18 inches (45 cm) for both the recreational and commercial fisheries; and modifications would be made to the Regular B DAS Program, including roll-over of quarterly incidental catch TACs. A more detailed description of the proposed and other two principal alternatives analyzed and considered may be found in the preamble of this proposed rule and in the EA, respectively.

Description of and Estimate of the Number of Small Entities to Which the Proposed Rule Would Apply

The Preferred Alternative would affect regulated entities engaged in commercial fishing for groundfish and entities that provide recreational fishing services to anglers. These entities include any vessel that has been issued either an open access or a limited access Federal permit under the FMP. The size standard for commercial fishing entities is $4 million in sales, while the size standard for party/charter operators is $7 million in sales. Available data indicate that, based on 2005–2007 average conditions, median gross sales by commercial fishing vessels were just over $200,000 and no single fishing entity earned more than $2 million. Available data are not adequate to identify affiliated vessels, so each operating unit is considered a small entity for purposes of the RFA. For regulated party/charter operators, the median value of gross receipts from passengers was just over $9,000 and did not exceed $500,000 in any year during 2001 to 2007. Therefore, all regulated commercial fishing and all regulated party/charter operators are determined to be small entities under the RFA, and , accordingly, there are no differential impacts between large and small entities under his proposed rule. The remaining discussion describes the number of regulated entities, the number of participating regulated entities, and the potential economic impacts on participating regulated entities for party/charter operators and for commercial fishing vessels.

Economic Impacts of the Proposed Action

The Preferred Alternative contains several different measures that may affect regulated vessels holding either an open access or limited access NE multispecies permit. During FY 2007, there were a total of 1,292 commercial open access permits (Handgear B) and a total of 1,530 limited access permits issued. Of these permits, 664 limited access permit holders and 123 open access permit holders participated in the groundfish fishery during FY 2007. The principal proposed management measures include a reduction in DAS; specification of differential DAS in the entire GOM, as well as a portion of GB; a SNE Closure Area; and modifications to trip limits. Because of statutory and regulatory requirements to meet certain conservation objectives, the overall short term economic impact of the proposed action and any alternative considered would be negative.

Region-wide, the impact on revenue received on trips where groundfish were landed was estimated to fall by 31 percent, while sales of all species was estimated to be reduced by 20 percent (from $156 million to $126 million). Among individual vessels, a small number of regulated entities, primarily from NJ, may be able to increase sales due to the location of the SNE Closure Area relative to taking no action (i.e., the SNE Differential DAS Area would remain in place under the No Action Alternative). That is, fishing opportunities in the area that would now be opened to these vessels would more than offset the changes in trip limits and DAS reduction. However, for the overwhelming majority of regulated small entities, the economic impacts would be negative. The impact on total revenue would vary depending on a port's dependence on groundfish, with the greatest reductions for ME and MA (34 percent and 27 percent, respectively). For vessels that fish exclusively in the GOM, the 2:1 differential DAS counting, coupled with the default 18–percent reduction in DAS, is equivalent to a 36–percent reduction in DAS. For vessels with a low dependence on groundfish, even this reduction in DAS may not result in a large reduction in total catch. The combination of where vessels fish, and higher dependence on groundfish trip

income, results in the highest impacts on fishing revenue.

The estimated reduction in total revenue to NH and CT home port vessels was 16 percent, and 17 percent, respectively. For the other states, the expected reduction ranged from 6 percent in NY to 8 percent in RI.

In relative terms, the proposed measures would have similar impacts among vessels of different sizes. Among the most affected vessels (the 20 percent that would experience the greatest impacts), the adverse impact on small vessels was less (39 percent) than for either medium or large vessels. For those vessels least affected by the Preferred Alternative, with respect to impacts by primary fishing gear, the reduction in total revenue was similar for vessels using gillnet or trawl gear. However, for those vessels more highly impacted by the Preferred Alternative, trawl gear impacts were higher than for either gillnet or hook gear vessels. For trawl vessels, an average to above average level of severity of impacts would mean a 30 percent reduction in total revenue, whereas gillnet and hook gear vessels would experience a 19 percent and 12 percent reduction, respectively.

Although analyses of the anticipated impacts of past management actions and subsequent comparison with the realized impacts of such actions suggests that realized revenue losses have been lower than estimated, the proposed restrictions would make it more difficult for vessels to cover fixed costs on available groundfish trips and would place greater pressure on vessels to earn additional income from non-groundfish fishing opportunities. The proposed action would implement some mitigating measures, but not all vessels would be able to take advantage of these opportunities; some would still require financial outlays that may not be supportable, given the reduced fishing opportunities that would be available.

The proposed measures would affect not only regulated entities engaged in commercial fishing for groundfish, but also entities that provide recreational fishing services to anglers. Available data indicate that, of the 92 federally permitted charter/party vessels that reported keeping cod, haddock, or winter flounder, approximately one-third would be adversely affected by one or more of the proposed measures, and about two-thirds of participating party/charter operators would not be adversely affected. Party/charter receipts may be expected to be reduced by approximately 6 percent. The impact of extending the closed season for recreationally caught GOM cod is difficult to predict due to the highly variable catch during the month of April. Reducing the size limit for haddock would increase the number of opportunities to keep haddock on all fishing trips.

The overall economic impact of the FY 2009 U.S./Canada TACs would likely be similar or slightly negative, compared to the economic impacts of the TACs specified for FY 2008. The specification of the proposed U.S./Canada TACs would result in a similar, or slightly reduced level of income from trips into the U.S./Canada Management Area. The FY 2009 cod and yellowtail flounder TACs would represent a decrease from the FY 2008 TAC levels. The changes in TAC reflect changes in stock size and the U.S. percentage share.

The principal effort reduction measures may reduce monkfish fishing effort due to the requirement that limited access monkfish Category C and D vessels that also hold a NE multispecies DAS permit use a NE multispecies DAS in conjunction with a monkfish DAS. The proposed measures would particularly impact those vessels with relatively few multispecies DAS. Monkfish vessels with a Category C or D permit may experience revenue loss if they previously fished in the proposed SNE Closure Area and cannot catch a similar amount of monkfish from outside of this area. The current regulations that allow limited access monkfish Category C and D vessels with fewer allocated NE multispecies DAS than allocated monkfish DAS to fish the difference between these two allocations, as monkfish-only DAS would still apply and would help mitigate the impact of the proposed measures (in particular, the reduction in NE multispecies DAS and the SNE Closure Area) on monkfish fishing effort.

The two primary skate fisheries, a wing fishery and a lobster bait fishery, are largely interwoven with the NE multispecies fishery. The regulations require that vessels must be fishing on a NE multispecies, monkfish, or scallop DAS, or fish in an exempted fishery, in order to possess skates. The vast majority of skate landings are landed on NE multispecies Category A DAS, and the DAS restrictions and SNE Closure Area of the Preferred Alternative would reduce fishing effort on skates. Thus, the proposed measures would have a negative economic impact on the skate fishery. The SNE Closure Area may have a greater negative impact on the skate bait fishery than the skate wing fishery, because the SNE Closure Area encompasses the bulk of the area fished in the skate bait fishery. If vessels were able to catch skate outside of the SNE Closure Area, the impacts would be mitigated.

Economic Impact of Alternatives to the Proposed Action

Under the No Action Alternative the estimated groundfish trip revenue would decline by 12.1 percent to $89 million, and total fishing revenue would decline by 7.7 percent to $145 million. The relative reduction in groundfish trip revenue varied little by home port state ranging from 10.3 percent to 12.8 percent. However, the change in total trip revenue varied among home port states primarily based on the relative contribution of groundfish trip revenue to total revenue. For example, total trip revenue declined by approximately 10 percent in ME, NH, and MA, but declined by no more than 6 percent in any other state. The change in revenue for individual vessels depends upon DAS use rate, as well as dependence upon groundfish. Under No Action, any vessel whose current DAS use rate was low would be unaffected, since their allocated A DAS under No Action would still be greater than the DAS they used. In relative terms, the No Action alternative would have similar impacts among vessels of different sizes. Among primary gears, the relative distribution of adverse impact on total revenue was nearly identical for vessels using gillnet or trawl gear, and less for most hook vessels.

Under Alternative 1 (inshore and offshore GOM differential DAS areas, with a relative high rate), the estimated groundfish trip revenue would decline by 28 percent to $72 million, and total fishing revenue would decline by 18 percent to $129 million. Alternative 1 would have an adverse impact on 477 of the 509 vessels included in the analysis. With a few exceptions, Alternative 1 would have similar impacts among vessels of different sizes. Compared to all other states, adverse impact on fishing revenue for ME home port vessels was much higher for vessels up to the 20th percentile (12 percent), and was higher for vessels between the 20th percentile and the median (21 percent). At intervals above the median, the impacts on ME home port vessels were similar to those on MA home port vessels. Vessels with high dependence on groundfish trip revenue may be expected to be more adversely affected by Alternative 1 than less dependent vessels.

Alternative 1 reduces fishing effort, and therefore reduces opportunities to catch and land skates. Compared to the No Action alternative, Alternative 1 would have negative economic impacts

on skate fishing vessels. The SNE Closure Area may have greater negative economic impacts on the skate bait fishery than on the skate wing fishery. Skate vessels potentially impacted by the SNE Closure Area may be able to mitigate some of their revenue losses by fishing in exempted fisheries. In general terms, Alternative 1 could have greater negative economic impacts on skate vessels than the other alternatives due to the 2.25:1 differential DAS area in the western GOM, where a great deal of skate fishing occurs.

Under Alternative 1, the 18–percent DAS reduction may reduce monkfish fishing effort, due to the requirement that limited access monkfish Category C and D vessels that also hold a NE multispecies DAS permit use a NE multispecies DAS in conjunction with a monkfish DAS. However, the existing regulation that allows limited access monkfish Category C and D vessels with fewer allocated NE multispecies DAS than allocate monkfish DAS to use the difference between these two allocations as monkfish-only DAS will help mitigate such impact on monkfish fishing effort. The SNE year-round closure, although smaller in size than the SNE Differential DAS Area currently in effect, would likely impact inshore monkfish gillnet vessels that fish in this region, reducing monkfish fishing effort overall in this area with a subsequent negative economic impact to the monkfish fishery. The extent of this potential negative social and economic impact would depend on the number of limited access monkfish Category C and D vessels actively fishing in the statistical areas encompassed by the closure, how much monkfish is landed from these areas, and whether or not these vessels could move their fishing operations into an open area in an effort to mitigate the impacts of the closure.

Under Alternative 2 (40–percent DAS reduction), the estimated groundfish trip revenue would decline by 33 percent to $68 million and total fishing revenue would decline by 21 percent to $124 million. Reflecting the relatively larger share of groundfish trip income in total revenue, the expected reduction in total fishing revenue was estimated to be at least 25 percent in ME (27 percent), and MA (27 percent). Across all vessels, gross revenues for only eight of the vessels included in the analysis would not change relative to status quo conditions, while for the remaining vessels the estimated reduction in total revenue ranged from 3 percent to 37 percent. In relative terms, Alternative 2 would have somewhat similar impacts among vessels of different sizes. Among primary gears the relative distribution of adverse impact on total revenue was similar for vessels using gillnet or trawl gear. The relative distribution of adverse impacts differed between states that border the GOM (ME, NH, and MA) and those that do not. Vessels with high dependence on groundfish trip revenue may be expected to be more adversely affected by Alternative 2 than less dependent vessels.

Alternative 2 reduces fishing effort, and therefore reduces opportunities to catch and land skates. Compared to the No Action alternative, Alternative 2 would be expected to have negative economic impacts on skate fishing vessels. The SNE Closure Area may have greater negative economic impacts on the skate bait fishery than on the skate wing fishery. Skate vessels potentially impacted by the SNE closure area may be able to mitigate some of their revenue losses by fishing in exempted fisheries. Alternatives 2 and 3 are difficult to differentiate from an economic impact standpoint.

Under Alternative 2, the 40–percent DAS reduction may reduce monkfish fishing effort due to the requirement that limited access monkfish Category C and D vessels that also hold a NE multispecies DAS permit use a NE multispecies DAS in conjunction with a monkfish DAS. However, the existing regulation that allows limited access monkfish Category C and D vessels with fewer allocated NE multispecies DAS than allocate monkfish DAS to use the difference between these two allocations as monkfish-only DAS will help mitigate such impact on monkfish fishing effort. The SNE year-round closure, although smaller in size than the SNE Differential DAS Area currently in effect, would likely impact inshore monkfish gillnet vessels that fish in this region, reducing monkfish fishing effort overall in this area with a subsequent negative economic impact to the monkfish fishery. The extent of this potential negative social and economic impact would depend on the number of limited access monkfish Category C and D vessels actively fishing in the statistical areas encompassed by the closure, how much monkfish is landed from these areas, and whether or not these vessels could move their fishing operations into an open area in an effort to mitigate the impacts of the closure.

List of Subjects in 50 CFR part 648

Fisheries, Fishing, Reporting and recordkeeping requirements.

Dated: January 9, 2009

Samuel D. Rauch III,

Deputy Assistant Administrator For RegulatoryPrograms, National Marine Fisheries Service.

For the reasons stated in the preamble, 50 CFR part 648 is proposed to be amended as follows:

PART 648—FISHERIES OF THE NORTHEASTERN UNITED STATES

1. The authority citation for part 648 continues to read as follows:

Authority: 16 U.S.C. 1801 *et seq.*

2. In § 648.2, a new definition for ''low profile gillnet'' is added, in alphabetical order, to read as follows:

§ 648.2 Definitions.

* * * * *

Low profile gillnet, with respect to the NE multispecies fishery, means a bottom-set gillnet with reduced vertical height achieved by tying the floatline to the leadline or by modifying the construction of the floatline, or through other means, to reduce or eliminate its buoyancy.

* * * * *

3. In § 648.10, paragraph (b)(5) is suspended, and paragraph (b)(6) is added to read as follows:

§ 648.10 DAS and VMS notification requirements.

* * * * *

(b) * * *

(6) *VMS notification requirements for other fisheries.* Unless otherwise specified in this part, or via letters sent to affected permit holders under paragraph (b)(2) of this section, the owner or authorized representative of a vessel that is required to use VMS, as specified in paragraph (b)(1) of this section, must notify the Regional Administrator of the vessel's intended fishing activity by entering the appropriate VMS code prior to leaving port at the start of each fishing trip. Notification of a vessel's intended fishing activity includes, but is not limited to, gear and DAS type to be used; area to be fished; and whether the vessel will be declared out of the DAS fishery, or will participate in the NE multispecies and monkfish DAS fisheries, including approved special management programs. A vessel cannot change any aspect of its VMS activity code outside of port, except that a NE multispecies vessel is authorized to change the category of DAS used (i.e., flip its DAS), as provided at § 648.85(b), or change the area declared to be fished so that the vessel may fish both inside and outside of the Eastern U.S./Canada Area on the same trip, as provided

at§ 648.85(a)(3)(viii)(A). VMS activity codes and declaration instructions are available from the Regional Administrator upon request.

* * * * *

4. In § 648.14:

A. Paragraphs (a)(50), (53), (121), (129), (130), (132),(146), (153), (165), (173) through (175), and (177) are suspended.

B. Paragraphs (c)(7), (23) through (26), (33), (39), (50), (51), (57) through (60), (62) through (66), (70), (76), (81) through (83), and (85) through (89) are suspended.

C. Paragraphs (g)(4) and (5) are suspended.

D. Paragraphs (a)(183) through (192), (c)(90) through (122), and (g)(6) and (7) are added.

The additions read as follows:

§ 648.14 Prohibitions.

* * * * *

(a) * * *

(183) Enter, or be on a fishing vessel with a NE multispecies permit in the area described in § 648.81(n), except as provided for in § 648.81(n).

(184) Fish for, harvest, possess, or land regulated species in or from the closed area specified in § 648.81(n), unless otherwise allowed under § 648.81(n).

(185) Enter or fish in the Western U.S./Canada Area or Eastern U.S./Canada Area specified in § 648.85(a)(1), unless declared into the area in accordance with§ 648.85(a)(3)(viii).

(186) If declared into one of the areas specified in § 648.85(a)(1), fish during that same trip outside of the declared area, unless in compliance with the applicable restrictions specified under § 648.85(a)(3)(viii)(A) or (B).

(187) Fail to notify NMFS via VMS prior to departing the Eastern U.S./Canada Area, when fishing inside and outside of the area on the same trip, in accordance with § 648.85(a)(3)(viii)(A)(*1*).

(188) When fishing inside and outside of the Eastern U.S./Canada Area on the same trip, fail to abide by the most restrictive DAS counting, trip limits, and reporting requirements that apply, as described in § 648.85(a)(3)(viii)(A).

(189) If fishing inside the Eastern U.S./Canada Area and in possession of fish in excess of what is allowed under most restrictive regulations that apply outside of the Eastern U.S./Canada Area, fish outside of the Eastern U.S./Canada Area on the same trip, as prohibited under § 648.85(a)(3)(viii)(A).

(190) Fail to comply with the reporting requirements under § 648.85(a)(3)(viii)(A)(*2*) when fishing inside and outside of the Eastern U.S./Canada Area on a trip.

(191) If fishing with trawl gear under a NE multispecies DAS in the Eastern U.S./Canada Area defined in § 648.85(a)(1)(ii), fail to fish with a haddock separator trawl, flounder trawl net, or Ruhle trawl, as specified in § 648.85(a)(3)(ix) and (b)(10)(iv)(J)(*3*), unless otherwise allowed under the Eastern U.S./Canada Haddock SAP rules in § 648.85(b)(8)(v)(E).

(192) Possess, land, or fish for regulated species while in possession of scallop dredge gear on a vessel not fishing under the scallop DAS program as described in § 648.53, or fishing under a general scallop permit, unless the vessel and the dredge gear conform with the stowage requirements of § 648.23(b), or unless the vessel has not been issued a multispecies permit and fishes for NE multispecies exclusively in state waters.

* * * * *

(c) * * *

(90) If fishing under the Eastern U.S./Canada Haddock SAP, fish for, harvest, possess, or land any regulated NE multispecies from the area specified in § 648.85(b)(8)(ii), unless in compliance with the restrictions and conditions specified in § 648.85(b)(8)(v)(A) through (M).

(91) If fishing under a Category B DAS in the Closed Area II Yellowtail Flounder SAP specified in § 648.85(b)(3), the Regular B DAS Pilot Program specified in§ 648.85(b)(10), or the Eastern U.S./Canada Haddock SAP Pilot Program specified in § 648.85(b)(8), remove any fish caught with any gear, including dumping the contents of a net, except on board the vessel.

(92) Possess or land per trip more than the possession or landing limits specified under § 648.86(a), (g), (h), and (l), if the vessel has been issued a limited access NE multispecies permit or open access NE multispecies permit, as applicable.

(93) Fail to declare through VMS the intent to be exempt from the GOM cod trip limit under § 648.86(l)(1), as required under § 648.86(l)(4), or fish north of the exemption line if in possession of more than the GOM cod trip limit specified under § 648.86(l)(1).

(94) Enter port, while on a NE multispecies DAS trip, in possession of more than the allowable limit of cod specified in § 648.86(l)(1), unless the vessel is fishing under the cod exemption specified in § 648.86(l)(4).

(95) For vessels fishing in the NE multispecies DAS program under the provisions of § 648.10(c), the call-in system, fail to remain in port for the appropriate time specified in § 648.86(l)(1)(ii)(A), except for transiting purposes, provided the vessel complies with § 648.86(l)(3). For vessels fishing in the NE multispecies DAS program under the provisions of § 648.10(b), the VMS system, fail to declare through VMS that insufficient DAS have elapsed in order to account for the amount of cod on board the vessel as required under § 648.86(l)(1)(ii)(B).

(96) Enter port, while on a NE multispecies DAS trip, in possession of more than the allowable limit of cod specified in § 648.86(l)(2).

(97) For vessels fishing in the NE multispecies DAS program under the provisions of § 648.10(c), the call-in system, fail to remain in port for the appropriate time specified in § 648.86(l)(2)(ii)(A), except for transiting purposes, provided the vessel complies with § 648.86(l)(3). For vessels fishing in the NE multispecies DAS program under the provisions of § 648.10(b), the VMS system, fail to declare through VMS that insufficient DAS have elapsed in order to account for the amount of cod on board the vessel as required under § 648.86(l)(2)(ii)(B).

(98) If fishing under the party/charter or private recreational regulations in the SNE Closure Area defined under § 648.81(n)(1), fish for or retain winter flounder.

(99) Discard legal-sized NE regulated multispecies, ocean pout, Atlantic halibut, or monkfish while fishing under a Regular B DAS in the Regular B DAS Program, as described in § 648.85(b)(10)(iv)(E).

(100) If fishing under a Regular B DAS in the Regular B DAS Program, fail to comply with the DAS flip requirements of § 648.85(b)(10)(iv)(E) if the vessel harvests and brings on board more than the landing limit for a groundfish stock of concern specified in § 648.85(b)(10)(iv)(D), other groundfish specified under § 648.86, or monkfish under § 648.94.

(101) If fishing in the Regular B DAS Program specified in § 648.85(b)(10), fail to comply with the requirements and restrictions specified in § 648.85(b)(10)(iv)(A) through (F), (I), and (J).

(102) If fishing in the Regular B DAS Program specified in § 648.85(b)(6), fail to comply with the VMS requirement specified in § 648.85(b)(6)(iv)(A).

(103) If fishing in the Regular B DAS Program specified in § 648.85(b)(10), fail to comply with the observer notification requirement specified in § 648.85(b)(10)(iv)(B).

(104) If fishing in the Regular B DAS Program specified in § 648.85(b)(10), fail

to comply with the VMS declaration requirement specified in § 648.85(b)(10)(iv)(C).

(105) If fishing in the Regular B DAS Program specified in § 648.85(b)(10), fail to comply with the landing limits specified in § 648.85(b)(10)(iv)(D).

(106) If fishing in the Regular B DAS Program specified in § 648.85(b)(10), fail to comply with the no discard and DAS flip requirements specified in § 648.85(b)(10)(iv)(E).

(107) If fishing in the Regular B DAS Program specified in § 648.85(b)(10), fail to comply with the minimum Category A DAS and Category B DAS accrual requirements specified in § 648.85(b)(10)(iv)(F).

(108) Use a Regular B DAS in the Regular B DAS Program specified in § 648.85(b)(10), if the program has been closed as specified in § 648.85(b)(10)(iv)(H) or (b)(10)(vi).

(109) If fishing in the Regular B DAS Program specified in § 648.85(b)(10), use a Regular B DAS after the program has closed, as required under § 648.85(b)(10)(iv)(G) or (H).

(110) If fishing in the Regular B DAS Program specified in § 648.85(b)(10), fail to comply with the reporting requirements specified in § 648.85(b)(10)(iv)(I).

(111) If fishing in the CA I Hook Gear Haddock SAP specified in § 648.85(b)(7), fail to comply with the DAS use restrictions specified in § 648.85(b)(7)(iv)(J), and (b)(7)(v)(A) or (b)(7)(vi)(A), whichever is applicable.

(112) If fishing in the CA I Hook Gear Haddock SAP specified in § 648.85(b)(7), fail to comply with the reporting requirement specified in § 648.85(b)(7)(v)(F) or (b)(7)(vi)(D), whichever is applicable.

(113) If fishing in the Regular B DAS Program specified in § 648.85(b)(10), fail to use a haddock separator trawl as described under § 648.85(a)(3)(iii)(A), or other approved gear as described under § 648.85(b)(10)(iv)(J).

(114) If fishing under a NE multispecies Category A DAS in the Interim Differential DAS Area, defined under § 648.82(e)(4)(i), fail to declare into the area through VMS as required under § 648.82(e)(4)(ii).

(115) If fishing under a NE multispecies Category A DAS in the Interim Differential DAS Area defined in § 648.82(e)(4)(i), and under the restrictions of one or more of the Special Management Programs under § 648.85, fail to comply with the most restrictive regulations.

(116) Possess or land more white hake than allowed under § 648.86(m).

(117) Retain or land zero retention stocks as specified under § 648.86(n).

(118) If possessing a Ruhle Trawl, either at sea or elsewhere, as allowed under § 648.85(b)(10)(iv)(J)(*1*) or (b)(8)(v)(E)(*1*), fail to comply with the net specifications under § 648.85(b)(10)(iv)(J)(*3*).

(119) If fishing as a private recreational and charter/party vessel in the SNE/MA winter flounder stock area defined in§ 648.85(b)(10)(v)(E), fish for or retain winter flounder or transit this area in possession of winter flounder caught outside this area, unless all bait and hooks are removed from fishing rods and any winter flounder on board has been gutted and stored.

(120) If fishing in the Regular B DAS Program specified in § 648.85(b)(10), fail to use a haddock separator trawl as described under § 648.85(a)(3)(ix)(A), or other approved gear as described under § 648.85(b)(10)(iv)(J).

(121) For vessels fishing inside and outside the Eastern U.S./Canada Area on the same trip, fail to comply with the most restrictive regulations that apply on the trip as required under § 648.85(a)(3)(viii)(A).

(122) For vessels fishing inside and outside the Eastern U.S./Canada Area on the same trip, fail to notify NMFS via VMS that the vessel is electing to fish in this manner, as required by § 648.85(a)(3)(viii)(A)(*1*).

* * * * *

(g) * * *

(6) If the vessel is a private recreational fishing vessel, fail to comply with the seasonal GOM cod possession prohibition described in § 648.89(c)(1)(vi) or, if the vessel has been issued a charter/party permit or is fishing under charter/party regulations, fail to comply with the prohibition on fishing under § 648.89(c)(5)(v).

(7) If fishing under the recreational or charter/party regulations, fish for or possess cod caught in the GOM Regulated Mesh Area during the seasonal GOM cod possession prohibition under § 648.89(c)(1)(vi) or (c)(5)(v) or, fail to abide by the appropriate restrictions if transiting with cod on board.

* * * * *

§ 648.80 [Amended]

5. In § 648.80, paragraph (i) is suspended.

6. In § 648.81, paragraph (b)(2)(iv)(B) is suspended, and paragraphs (b)(2)(iv)(C) and (n) are added to read as follows:

§ 648.81 NE multispecies closed areas and measures to protect EFH.

* * * * *

(b) * * *

(2) * * *

(iv) * * *

(C) The vessel has declared into the Eastern U.S./Canada Area as specified in § 648.85(a)(3)(viii) and is transiting CA II in accordance with the provisions of § 648.85(a)(3)(vii).

* * * * *

(n) *Southern New England (SNE) Closure Area.* (1) No fishing vessel, or person on such vessel, may enter, fish in, or be in; and no fishing gear capable of catching NE multispecies, unless otherwise allowed in this part, may be in, or on board a vessel, in the area known as the SNE Closure Area, as defined by straight lines connecting the following points in the order stated, except as specified in paragraphs (n)(2) and (3) of this section (a chart depicting this area is available from the Regional Administrator upon request).

SNE CLOSURE AREA

Point	N. lat.	W. long.
SNECA1	(1)	70°00'
SNECA2	41°30'	70°00'
SNECA3	41°30'	68°30'
SNECA4	40°30'	68°30'
SNECA5	40°30'	(2)

(1) Intersection of the shoreline of Cape Cod, Massachusetts and 70°00' W. long.

(2) Intersection of the shoreline of Staten Island, New York, and 40°30' N. lat.

(2) Paragraph (n)(1) of this section does not apply to persons on fishing vessels or fishing vessels:

(i) Fishing with exempted gear, as defined in this part, or under the exemptions specified in § 648.80(b)(2)(vi) and (b)(3);

(ii) Fishing with hook gear, provided that no gear other than hook gear is on board, and the vessel abides by the NE multispecies possession restrictions under § 648.86; or

(iii) Fishing under the charter/party or private recreational regulations, provided that vessel abides by the recreational restrictions under § 648.89, and:

(A) With the except of tuna, fish harvested or possessed by the vessel are not sold or intended for trade, barter or sale, regardless of where the regulated species are caught; and

(B) The vessel has no gear other than rod and reel or handline on board.

(3) NE multispecies permitted vessels possessing NE multispecies on board the vessel and transiting through the SNE Closure Area, provided gear other than hook gear is stowed in accordance with § 648.23(b).

7. In § 648.82:

A. Paragraphs (e)(2) and (3); (j)(1)(iii)(A) through (D); (k)(4)(iv) and (x); and (l)(1)(iv) and (ix) are suspended.

B. Paragraphs (e)(4) and (5), and (j)(1)(iii)(E), (F), and (G) are added.

The additions read as follows:

§ 648.82 Effort-control program for NE multispecies limited access vessels.

* * * * *

(e) * * *

(4) *Differential DAS*. For a NE multispecies DAS vessel that intends to fish some or all of its trip, or fishes some or all of its trip other than for transiting purposes, under a Category A DAS in the Interim Differential DAS Area, as defined in paragraph (e)(4)(i) of this section, with the exception of Day gillnet vessels, which accrue DAS in accordance with paragraph (j)(1)(iii) of this section, each Category A DAS, or part thereof, shall be counted at the differential DAS rate described in paragraph (e)(4)(iii) of this section, and be subject to the restrictions defined in this paragraph (e).

(i) *Interim Differential DAS Area*. The Interim Differential DAS Area is defined as that area bounded on the west by the coast of Massachusetts, New Hampshire, and Maine, on the east by the U.S.-Canada maritime boundary, and by straight lines connecting the following points in the order stated (a chart depicting this area is available from the Regional Administrator upon request):

Point	N. lat.	W. long.
ID10	41°30'	66°35'(1)
ID8	41°30'	70°00'
ID9	(2)	70°00'

(1) The U.S.-Canada Maritime Boundary.
(2) The intersection of the Cape Cod, Massachusetts, shoreline and 70°00' W. long.

(ii) *Declaration*. A NE multispecies DAS vessel that intends to fish, or fishes under a Category A DAS in the Interim Differential DAS Area, as described in paragraph (e)(4)(i) of this section, must, prior to leaving the dock, declare through the VMS, in accordance with instructions to be provided by the Regional Administrator, that the vessel will fish in the Interim Differential DAS Area. A DAS vessel that fishes in the Eastern U.S./Canada Area and intends to fish, or fishes, subsequently in the Interim Differential DAS Area under a Category A DAS, must declare its intention to do so through its VMS prior to leaving the dock at the start of the trip or prior to leaving the Eastern U.S./Canada Area, as specified in§ 648.85(a)(3)(viii)(A)(*3*).

(iii) *Differential DAS counting*. For a NE multispecies DAS vessel that intends to fish, or fishes for some or all of its trip other than for transiting purposes under a Category A DAS in the Interim Differential DAS Area, each Category A DAS, or part thereof, shall be counted at the ratio of 2 to 1 for the entire trip, even if only a portion of the trip is spent fishing in the Interim Differential DAS Area. A vessel that has not declared its intent to fish in the Interim Differential DAS Area and that is not transiting, as specified in paragraph (e)(4)(v) of this section, may be in the Interim Differential DAS Area, provided the vessel's fishing gear is stowed in accordance with the provisions of§ 648.23(b) for the entire time the vessel is in the area, and the vessel declares immediately upon entering the Interim Differential DAS Area, via VMS, that it is in the area.

(iv) *Restrictions*. A NE multispecies vessel fishing under a Category A DAS in the Interim Differential DAS Area defined in paragraph (e)(4)(i) of this section, under the restrictions of this paragraph (e)(4) and under the restrictions of one or more of the Special Management Programs under§ 648.85, must comply with the most restrictive DAS counting, trip limits, and reporting requirements, specified in this paragraph (e)(4) and in § 648.85, under the pertinent Special Management Program.

(v) *Transiting*. A vessel may transit the Interim Differential DAS Area, as defined in paragraph (e)(4)(i) of this section, provided the gear is stowed in accordance with the provisions of § 648.23(b).

(5) *Regular B DAS Program 24–hr clock*. For a vessel electing to fish in the Regular B DAS Program, as specified at § 648.85(b)(10), and that remains fishing under a Regular B DAS for the entire fishing trip (without a DAS flip), DAS used shall accrue at the rate of 1 full DAS for each calendar day, or part of a calendar day fished. For example, a vessel that fished on one calendar day from 6 a.m. to 10 p.m. would be charged 24 hr of Regular B DAS, not 16 hr; a vessel that left on a trip at 11 p.m on the first calendar day and returned at 10 p.m. on the second calendar day would be charged 48 hr of Regular B DAS instead of 23 hr, because the fishing trip would have spanned 2 calendar days. For the purpose of calculating trip limits specified under § 648.86, the amount of DAS deducted from a vessel's DAS allocation shall determine the amount of fish the vessel can legally land. For a vessel electing to fish in the Regular B DAS Program, as specified at § 648.85(b)(10), while also fishing in the Interim Differential DAS Area, defined in paragraph (e)(4)(i) of this section, Category B DAS shall accrue at the rate described in this paragraph (e)(5), unless the vessel flips to a Category A DAS, in which case the vessel is subject to the pertinent DAS accrual restrictions of paragraph (e)(4)(iii) of this section for the entire trip. For vessels electing to fish in both the Regular B DAS Program, as specified in § 648.85(b)(10), and in the Eastern U.S./Canada Area, as specified in§ 648.85(a), DAS counting will begin and end according to the DAS accounting rules specified in § 648.10(b)(2)(iii).

* * * * *

(j) * * *

(1) * * *

(iii) * * *

(E) A Day gillnet vessel fishing with gillnet gear that has elected to fish in the Regular B DAS Program, as specified in § 648.85(b)(10), under a Category B DAS, is subject to the DAS accrual provisions of paragraph (e)(5) of this section.

(F) A Day gillnet vessel fishing with gillnet gear under a NE multispecies Category A DAS, when not subject to differential DAS counting as specified under paragraph (e)(4) of this section, shall accrue 15 hr of DAS for each trip of more than 3 hr, but less than or equal to 15 hr. Such vessel shall accrue actual DAS time at sea for trips less than or equal to 3 hr, or more than 15 hr.

(G) A Day gillnet vessel fishing with gillnet gear under a NE multispecies Category A DAS that is fishing in the Interim Differential DAS Area and, therefore, subject to differential DAS counting as specified under paragraph (e)(4)(iii) of this section, shall accrue DAS at a differential DAS rate of 2 to 1 for the actual hours used for any trip of less than or equal to 3 hr in duration, and for any trip of greater than 7.5 hr. For such vessels fishing on any trip of more than 3 hr, but less than or equal to 7.5 hr duration, vessels will be charged a full 15 hr. For example, a Day gillnet vessel fishing in the Interim Differential DAS Area for 8 actual hr would be charged 16 hours of DAS, or if fishing for 5 actual hr, would be charged 15 hours of DAS.

* * * * *

8. In § 648.83, paragraph (a)(1) is suspended and paragraph (a)(3) is revised to read as follows:

§ 648.83 Multispecies minimum fish sizes.

(a) * * *

(3) Minimum fish sizes for recreational vessels and charter/party vessels that are not fishing under a NE multispecis DAS are specified in § 648.89. Except as provided in § 648.17, all other vessels are subject to the following minimum fish sizes, determined by total length (TL):

MINIMUM FISH SIZES (TL) FOR COMMERCIAL VESSELS

Species	Sizes (inches)
Cod	22 (55.9 cm)
Haddock	18 (45.7 cm)
Pollock	19 (48.3 cm)
Witch flounder (gray sole)	14 (35.6 cm)
Yellowtail flounder	13 (33.0 cm)
American plaice	14 (35.6 cm)
Atlantic halibut	36 (91.4 cm)
Winter flounder (blackback)	12 (30.5 cm)
Redfish	9 (22.9 cm)

* * * * *

9. In § 648.85:

A. Paragraphs (a)(3)(ii) and (iii); and (a)(3)(v)(A), (B), and (C) are suspended.

B. Paragraphs (b)(4), (5), and (6); (b)(7)(iv)(A); (b)(7)(v)(D); (b)(7)(vi)(E); (b)(8)(v)(E)(*2*); and (b)(8)(v)(H) are suspended.

C. Paragraphs (a)(3)(v)(D), (E), and (F); (a)(3)(viii) and (ix); (b)(7)(iv)(J); (b)(7)(v)(F); and (b)(7)(vi)(G); (b)(8)(v)(E)(*3*); (b)(8)(v)(M); and (b)(9) and (10) are added.

The additions read as follows:

§ 648.85 Special management programs.

* * * * *

(a) * * *

(3) * * *

(v) * * *

(D) Total pounds of cod, haddock, yellowtail flounder, winter flounder, witch flounder, pollock, windowpane flounder, and white hake kept;

(E) Date fish were caught and statistical area in which fish were caught; and

(F) Vessel Trip Report (VTR) serial number, as instructed by the Regional Administrator.

* * * * *

(viii) *Declaration*. To fish in the U.S./Canada Management Area under a groundfish DAS, a NE multispecies DAS vessel, prior to leaving the dock, must declare through the VMS, in accordance with instructions to be provided by the Regional Administrator, which specific U.S./Canada Management Area described in paragraphs (a)(1)(i) or (ii) of this section, or which specific SAP, described in paragraph (b) of this section, within the U.S./Canada Management Area the vessel will fish in, and comply with the restrictions and conditions in paragraphs (a)(3)(viii)(A) through (C) of this section. Vessels other than NE multispecies DAS vessels are not required to declare into the U.S./Canada Management Areas.

(A) A vessel fishing under a NE multispecies DAS in the Eastern U.S./Canada Area may fish both inside and outside of the Eastern U.S./Canada Area on the same trip, provided it complies with the most restrictive DAS counting, trip limits, and reporting requirements for the areas fished for the entire trip, and provided it complies with the restrictions specified in paragraphs (a)(3)(viii)(A)(*1*) through (*4*) of this section. On a trip when the vessel operator elects to fish both inside and outside of the Eastern U.S./Canada Area, all cod, haddock, and yellowtail flounder caught on the trip shall count toward the applicable hard TAC specified for the U.S./Canada Management Area.

(*1*) The vessel operator must notify NMFS via VMS any time prior to leaving the dock at the start of the trip or prior to leaving the Eastern U.S./Canada Area (including at the time of initial declaration into the Eastern U.S./Canada Area) that it is also electing to fish outside the Eastern U.S./Canada Area. With the exception of vessels participating in the Regular B DAS Program and fishing under a Regular B DAS, once a vessel that has elected to fish outside of the Eastern U.S./Canada Area leaves the Eastern U.S./Canada Area, Category A DAS shall accrue from the time the vessel crosses the VMS demarcation line at the start of its fishing trip until the time the vessel crosses the demarcation line on its return to port, in accordance with § 648.10(b)(2)(iii).

(*2*) The vessel must comply with the reporting requirements of the U.S./Canada Management Area specified under paragraph (a)(3)(v) of this section for the duration of the trip.

(*3*) If the vessel fishes or intends to fish in the Interim Differential DAS Area defined under § 648.82(e)(4)(i), it must declare its intent to fish in the Interim Differential DAS Area prior to leaving the Eastern U.S./Canada Area (including at the time of initial declaration into the Eastern U.S./Canada Area) , and must not have exceeded the CC/GOM or SNE/MA yellowtail flounder trip limits, specified in § 648.86(g), for the respective areas.

(*4*) If a vessel possesses yellowtail flounder in excess of the trip limits for CC/GOM yellowtail flounder or SNE/MA yellowtail flounder, as specified in§ 648.86(g), the vessel may not fish in either the CC/GOM or SNE/MA yellowtail flounder stock area during that trip (i.e., may not fish outside of the U.S./Canada Management Area).

(B) A vessel fishing under a NE multispecies DAS in the Western U.S./Canada Area may fish inside and outside the Western U.S./Canada Area on the same trip, provided it complies with the most restrictive regulations applicable to the area fished for the entire trip (e.g., the possession restrictions specified in paragraph (a)(3)(iv)(C)(*4*) of this section), and the reporting requirements specified in paragraph (a)(3)(v) of this section.

(C) For the purposes of selecting vessels for observer deployment, a vessel fishing in either of the U.S./Canada Management Areas specified in paragraph (a)(1) of this section must provide notice to NMFS of the vessel name; contact name for coordination of observer deployment; telephone number for contact; and the date, time, and port of departure, at least 72 hr prior to the beginning of any trip that it declares into the U.S./Canada Management Area, as required under this paragraph (a)(3)(viii).

(ix) *Gear requirements*. NE multispecies vessels fishing with trawl gear in the Eastern U.S./Canada Area defined in paragraph (a)(1)(ii) of this section, unless otherwise provided in paragraphs (b)(8) and (b)(10) of this section, must fish with a Ruhle trawl, as described in paragraph (b)(10)(iv)(J)(1) of this section, or a haddock separator trawl or a flounder trawl net, as described in paragraphs (a)(3)(ix)(A) and (B) of this section (all three nets may be onboard the fishing vessel simultaneously). Gear other than the Ruhle trawl, haddock separator trawl, or the flounder trawl net as described in paragraph (a)(3)(ix) of this section, or gear authorized under paragraphs (b)(8) and (b)(10) of this section, may be on board the vessel during a trip to the Eastern U.S./Canada Area, provided the gear is stowed according to the regulations at § 648.23(b). The description of the Ruhle trawl, the haddock separator trawl and flounder trawl net in paragraph (b)(10)(iv)(J)(1) of this section and in this paragraph (a)(3)(ix) may be further specified by the Regional Administrator through publication of such specifications in the **Federal Register**, consistent with the requirements of the Administrative Procedure Act.

(A) *Haddock separator trawl*. A haddock separator trawl is defined as a groundfish trawl modified to a vertically oriented trouser trawl configuration, with two extensions arranged one over the other, where a codend shall be attached only to the upper extension, and the bottom extension shall be left open and have no codend attached. A horizontal large-mesh separating panel constructed with a minimum of 6.0-inch (15.2–cm) diamond mesh must be installed between the selvedges joining the upper and lower panels, as described in this paragraph (a)(3)(ix)(A) and in paragraph (B) of this section,

extending forward from the front of the trouser junction to the aft edge of the first belly behind the fishing circle.

(*1*) *Two-seam bottom trawl nets.* —For two-seam nets, the separator panel will be constructed such that the width of the forward edge of the panel is 80–85 percent of the width of the after edge of the first belly of the net where the panel is attached. For example, if the belly is 200 meshes wide (from selvedge to selvedge), the separator panel must be no wider than 160–170 meshes.

(*2*) *Four-seam bottom trawl nets.* —For four-seam nets, the separator panel will be constructed such that the width of the forward edge of the panel is 90–95 percent of the width of the after edge of the first belly of the net where the panel is attached. For example, if the belly is 200 meshes wide (from selvedge to selvedge), the separator panel must be no wider than 180–190 meshes. The separator panel will be attached to both of the side panels of the net along the midpoint of the side panels. For example, if the side panel is 100 meshes tall, the separator panel must be attached at the 50th mesh.

(B) *Flounder trawl net.* A flounder trawl net is defined as bottom trawl gear meeting one of the following two net descriptions:

(*1*) A two-seam, low-rise net constructed with mesh size in compliance with § 648.80(a)(4), where the maximum footrope length is not greater than 105 ft (32.0 m) and the headrope is at least 30–percent longer than the footrope. The footrope and headrope lengths shall be measured from the forward wing end.

(*2*) A two-seam, low-rise net constructed with mesh size in compliance with § 648.80(a)(4), with the exception that the top panel of the net contains a section of mesh at least 10 ft (3.05 m) long and stretching from selvedge to selvedge, composed of at least 12–inch (30.5–cm) mesh that is inserted no farther than 4.5 meshes behind the headrope.

(b) * * *

(7) * * *

(iv) * * *

(J) *DAS use restrictions.* A vessel fishing in the CA I Hook Gear Haddock SAP may not initiate a DAS flip. A vessel is prohibited from fishing in the CA I Hook Gear Haddock SAP while making a trip under the Regular B DAS Program described under paragraph (b)(10) of this section. DAS will be charged as described in § 648.10.

(v) * * *

(F) *Reporting requirements.* The owner or operator of a Sector vessel declared into the CA I Hook Gear Haddock SAP must submit reports to the Sector Manager, with instructions to be provided by the Sector Manager, for each day fished in the CA I Hook Gear Haddock SAP Area. The Sector Manager shall provide daily reports to NMFS, including at least the following information: Total pounds of cod, haddock, yellowtail flounder, winter flounder, witch flounder, pollock, windowpane flounder, and white hake kept; date fish were caught; and VTR serial number, as instructed by the Regional Administrator. Daily reporting must continue even if the vessel operator is required to exit the SAP as required under paragraph (b)(7)(iv)(F) of this section.

(vi) * * *

(G) *GB cod incidental catch TAC.* The maximum amount of GB cod (landings and discards) that may be cumulatively caught by non-Sector vessels from the CA I Hook Gear Haddock Access Area in a fishing year is the amount specified under paragraph (b)(9)(ii) of this section.

(8) * * *

(v) * * *

(E) * * *

(*3*) *Approval of additional gear.* The Regional Administrator may authorize additional gear for use in the Eastern U.S./Canada Haddock SAP in accordance with the standards and requirements specified at paragraph (b)(10)(iv)(J)(*2*) of this section.

* * * * *

(M) *Incidental TACs.* The maximum amount of GB cod, and the amount of GB yellowtail flounder, GB winter flounder, and pollock, both landings and discards, that may be caught when fishing in the Eastern U.S./Canada Haddock SAP Program in a fishing year by vessels fishing under a Category B DAS, as authorized in paragraph (b)(8)(v)(A) of this section, is the amount specified in paragraphs (b)(9)(ii), (iii), and (iv) of this section, respectively.

(9) *Incidental Catch TACs.* Unless otherwise specified in this paragraph (b)(9), Incidental Catch TACs shall be specified through the periodic adjustment process described in § 648.90, and allocated as described in this paragraph (b)(9), for each of the following stocks: GOM cod, GB cod, GB yellowtail flounder, GB winter flounder, GOM winter, white hake, CC/GOM yellowtail flounder, SNE/MA yellowtail flounder, witch flounder, and pollock. NMFS shall sent letters to limited access NE multispecies permit holders notifying them of such TACs.

(i) *Stocks other than GB cod, GB yellowtail flounder, GB winter flounder, and pollock.* With the exception of GB cod, GB yellowtail flounder, GB winter flounder, and pollock, the Incidental Catch TACs specified under this paragraph (b)(9) shall be allocated to the Regular B DAS Program described in paragraph (b)(10) of this section.

(ii) *GB cod.* The Incidental TAC for GB cod specified under this paragraph (b)(9) shall be subdivided as follows: 70–percent to the Regular B DAS Program described in paragraph (b)(10) of this section; 16–percent to the CA I Hook Gear Haddock SAP described in paragraph (b)(7) of this section; and 14–percent to the Eastern U.S./Canada Haddock SAP described in paragraph (b)(8) of this section.

(iii) *GB yellowtail flounder and GB winter flounder.* Each of the Incidental Catch TACs for GB yellowtail flounder and GB winter flounder specified under this paragraph (b)(9) shall be subdivided as follows: 80–percent to the Regular B DAS Program described in paragraph (b)(10) of this section; and 20–percent to the Eastern U.S./Canada Haddock SAP described in paragraph (b)(8) of this section.

(iv) *Pollock.* The Incidental TAC for pollock specified under this paragraph (b)(9) shall be subdivided as follows: 90–percent to the Regular B DAS Program described in paragraph (b)(10) of this section; 5–percent to the CA I Hook Gear Haddock SAP described in paragraph (b)(7) of this section; and 5–percent to the Eastern U.S./Canada Haddock SAP described in paragraph (b)(8) of this section.

(10) *Regular B DAS Program*—(i) *Eligibility.* Vessels issued a valid limited access NE multispecies DAS permit and allocated Regular B DAS are eligible to participate in the Regular B DAS Program and may elect to fish under a Regular B DAS, provided they comply with the requirements and restrictions of this paragraph (b)(10), and provided the use of Regular B DAS is not restricted according to paragraphs (b)(10)(iv)(G) or (H) of this section, or paragraph (b)(10)(vi) of this section. Vessels are required to comply with the no discarding and DAS flip requirements specified in paragraph (b)(10)(iv)(E) of this section and the DAS balance and accrual requirements specified in paragraph (b)(10)(iv)(F) of this section. Vessels may fish under the B Regular DAS Program and in the U.S./Canada Management Area on the same trip, but may not fish under the Regular B DAS Program and in a SAP on the same trip.

(ii) [Reserved]

(iii) *Quarterly Incidental Catch TACs.* The Incidental Catch TACs specified in accordance with paragraph (b)(9) of this section shall be divided into quarterly catch TACs as follows: The first quarter shall received 13 percent of the

Incidental Catch TACs and the remaining three quarters shall each receive 29 percent of the Incidental Catch TACs. When the Regional Administrator projects that there is uncaught TAC in quarters one, two, or three, the uncaught TAC will be added to the TAC allocated for the subsequent quarter. Uncaught TAC at the end of the fishing year will not be added to allocations in subsequent fishing years. NMFS shall send letters to all limited access NE multispecies permit holders notifying them of such TACs and any adjustments to such TACs.

(iv) *Program requirements*—(A) *VMS requirement*. A NE multispecies DAS vessel fishing in the Regular B DAS Program described in paragraph (b)(10)(i) of this section must have installed on board an operational VMS unit that meets the minimum performance criteria specified in§§ 648.9 and 648.10.

(B) *Observer notification*. For the purposes of selecting vessels for observer deployment, a vessel must provide notice to NMFS of the vessel name; contact name for coordination of observer deployment; telephone number for contact; the date, time, and port of departure; and the planned fishing area or areas (GOM, GB, or SNE/MA) at least 72 hr prior to the beginning of any trip that it declares into the Regular B DAS Program, as required under paragraph (b)(10)(iv)(C) of this section, and in accordance with instructions provided by the Regional Administrator. Providing notice of the area that the vessel intends to fish does not restrict the vessel's activity to only that area on that trip (i.e., the vessel operator may change his/her plans regarding planned fishing area).

(C) *VMS declaration*. To participate in the Regular B DAS Program under a Regular B DAS, a vessel must declare into the Program via VMS prior to departure from port, in accordance with instructions provided by the Regional Administrator. A vessel declared into the Regular B DAS Program cannot fish in an approved SAP described under this section on the same trip. Mere declaration of a Regular B DAS Program trip does not reserve a vessel's right to fish under the Program, if the vessel has not crossed the VMS demarcation line.

(D) *Landing limits*. Unless otherwise specified in this paragraph (b)(10)(iv)(D), a NE multipecies vessel fishing in the Regular B DAS Program described in this paragraph (b)(10), and fishing under a Regular B DAS, may not land more than 100 lb (45.5 kg) per DAS, or any part of a DAS, up to a maximum of 1,000 lb (454 kg) per trip of any of the following species/stocks from the areas specified in paragraph (b)(10)(v) of this section: Cod, pollock, white hake, witch flounder, GB winter flounder, GB yellowtail flounder, and southern windowpane flounder; and may not land more than 25 lb (11.3 kg) per DAS, or any part of a DAS, up to a maximum of 250 lb (113 kg) per trip of CC/GOM or SNE/MA yellowtail flounder. In addition, trawl vessels that are required to fish with a haddock separator trawl or Ruhle trawl, as specified under paragraph (b)(10)(iv)(J) of this section, and other gear that may be required in order to reduce catches of stocks of concern as described under paragraph (b)(10)(iv)(J) of this section, are restricted to the following trip limits: 500 lb (227 kg) of all flatfish species (American plaice, witch flounder, winter flounder (GOM or GB), windowpane flounder (south), and yellowtail flounder), combined; 500 lb (227 kg) of monkfish (whole weight); 500 lb (227 kg) of skates (whole weight); and zero possession of lobsters, ocean pout, SNE/MA winter flounder, and windowpane (north), unless otherwise restricted by § 648.94(b)(3).

(E) *No-discard provision and DAS flips*. A vessel fishing in the Regular B DAS Program under a Regular B DAS may not discard legal-sized regulated species, Atlantic halibut, or monkfish, unless otherwise specified in this paragraph (b)(10)(iv)(E). This prohibition on discarding does not apply to ocean pout, windowpane (north), or SNE winter flounder, or in areas or times where the possession or landing of regulated species is prohibited. If such a vessel harvests and brings on board legal-sized regulated NE multispecies, or Atlantic halibut (unless exempted above) in excess of the allowable landing limits specified in paragraph (b)(10)(iv)(D) of this section, or § 648.86, the vessel operator must notify NMFS immediately via VMS to initiate a DAS flip from a B DAS to an A DAS. Once this notification has been received by NMFS, the vessel shall automatically be switched by NMFS to fishing under a Category A DAS for its entire fishing trip. Thus, any Category B DAS that accrued between the time the vessel declared into the Regular B DAS Program at the beginning of the trip (i.e., at the time the vessel crossed the demarcation line at the beginning of the trip) and the time the vessel declared its DAS flip shall be accrued as Category A DAS, and not Regular B DAS. After flipping to a Category A DAS, the vessel is subject to the applicable trip limits specified under § 648.86 or paragraph (a) of this section and may discard fish in excess of the applicable trip limits.

(F) *Minimum Category A DAS and B DAS accrual*. For a vessel fishing under the Regular B DAS Program, the number of Regular B DAS that may be used on a trip cannot exceed the number of Category A DAS that the vessel has at the start of the trip. If a vessel is fishing in the Interim Differential DAS area, as described in § 648.82(e)(4)(i), the number of Regular B DAS that may be used on a trip cannot exceed the number of Category A DAS that the vessel has at the start of the trip divided by 2. For example, if a vessel plans a trip under the Regular B DAS Program into the Interim Differential DAS Area and has 10 Category A DAS available at the start of the trip, the maximum number of Regular B DAS that the vessel may fish under the Regular B DAS Program is 5. A vessel fishing in the Regular B DAS Program for its entire trip shall accrue DAS in accordance with § 648.82(e)(4).

(G) *Restrictions when 100 percent of the incidental catch TAC is harvested*. With the exception of white hake, witch flounder, and pollock, when the Regional Administrator provides notification through methods consistent with the Administrative Procedure Act, that 100 percent of one or more of quarterly incidental TACs specified under paragraph (b)(10)(iii) of this section has projected to have been harvested, the use of Regular B DAS shall be prohibited in the pertinent stock area(s) as defined under paragraph (b)(10)(v) of this section for the duration of the calendar quarter. The closure of a stock area to all Regular B DAS use shall occur even if the quarterly incidental catch TACs for other stocks in that stock area have not been completely harvested. When the Regional Administrator projects that 100 percent of the quarterly white hake, witch flounder, or pollock incidental catch TAC specified under paragraph (b)(10)(iii) of this section has been harvested, vessels fishing under a Regular B DAS, or that complete a trip under a Regular B DAS, shall be prohibited from retaining white hake, witch flounder, or pollock, respectively.

(H) *Closure of Regular B DAS Program and quarterly DAS limits*. Unless otherwise closed as a result of the harvest of an Incidental Catch TAC as described in paragraph (b)(10)(iv)(G) of this section, or as a result of an action by the Regional Administrator under paragraph (b)(10)(vi) of this section, the use of Regular B DAS shall, in a manner consistent with the Administrative Procedure Act, be prohibited when 500 Regular B DAS have been used during the first quarter of the fishing year (May-July), or when 1,000 Regular B DAS

have been used during any of the remaining quarters of the fishing year, in accordance with § 648.82(e)(5).

(I) *Reporting requirements*. The owner or operator of a NE multispecies DAS vessel must submit catch reports via VMS in accordance with instructions provided by the Regional Administrator, for each day fished when declared into the Regular B DAS Program. The reports must be submitted in 24–hr intervals for each day, beginning at 0000 hr and ending at 2400 hr. The reports must be submitted by 0900 hr of the following day. For vessels that have declared into the Regular B DAS Program in accordance with paragraph (b)(10)(iv)(C) of this section, the reports must include at least the following information: Statistical area fished; total pounds of cod, haddock, yellowtail flounder, winter flounder, witch flounder, pollock, and white hake kept; date fish were caught; and VTR serial number, as instructed by the Regional Administrator. Daily reporting must continue even if the vessel operator is required to flip, as described under paragraph (b)(10)(iv)(E) of this section.

(J) *Gear requirement*—(*1*) Vessels fishing with trawl gear in the Regular B DAS Program must use a haddock separator trawl or Ruhle trawl, as described under paragraphs (a)(3)(iii)(A) and (b)(10)(iv)(J)(*3*) of this section, respectively, or other type of gear, if approved as described under this paragraph (b)(10)(iv)(J). Other gear may be on board the vessel, provided it is stowed when the vessel is fishing under the Regular B DAS Program. Vessels fishing with gillnet gear in the Regular B DAS Program may not use a low profile (''tie-down'' type) gillnet.

(*2*) Approval of additional gear. At the request of the Council or Council's Executive Committee, the Regional Administrator may authorize additional gear for use in the Regular B DAS Program, through notice consistent with the Administrative Procedure Act. The proposed gear must satisfy standards specified in paragraphs (b)(10)(iv)(J)(*2*)(*i*) or (*ii*) of this section in a completed experiment that has been reviewed according to the standards established by the Council's research policy before the gear can be considered and approved by the Regional Administrator. Comparisons of the criteria specified in this paragraph (b)(10)(iv)(J)(*2*) will be made to an appropriately selected control gear.

(*i*) The gear must show a statistically significant reduction in catch of at least 50 percent (by weight, on a trip-by-trip basis) of each regulated species stock of concern, unless otherwise allowed in this paragraph (b)(10)(iv)(J)(2)(i), or other non-groundfish stocks that are overfished or subject to overfishing identified by the Council. This requirement does not apply to regulated species identified by the Council as not being subject to gear performance standards; or

(*ii*) The catch of each regulated species stock of concern, unless otherwise allowed in this paragraph (b)(10)(iv)(J)(2)(ii), or other non-groundfish stocks that are overfished or subject to overfishing identified by the Council, must be less than 5 percent of the total catch of regulated groundfish by weight, on a trip-by-trip basis. This requirement does not apply to regulated species identified by the Council as not being subject to gear performance standards.

(*3*) *Ruhle Trawl*. The Ruhle Trawl is a four-seam bottom groundfish trawl designed to reduce the bycatch of cod while retaining or increasing the catch of haddock, when compared to traditional groundfish trawls. A Ruhle Trawl must be constructed in accordance with the standards described and referenced in this paragraph (b)(10)(iv)(J)(3). The mesh size of a particular section of the Ruhle Trawl is measured in accordance with § 648.80(f)(2), unless insufficient numbers of mesh exist, in which case the maximum total number of meshes in the section will be measured (between 2 and 20 meshes).

(*i*) The net must be constructed with four seams (i.e., a net with a top and bottom panel and two side panels), and include at least the following net sections as depicted in Figure 1 of this part A ''Nomenclature for 4–seam Ruhle Trawl'' (this figure is also available from the Administrator, Northeast Region): Top jib, bottom jib, jib side panels (x 2), top wing, bottom wing, wing side panels (x 2), square, bunt, square side panels (x 2), first top belly, first bottom belly, first belly side panels (x 2), second top belly, second bottom belly, second belly side panels (x 2), and third bottom belly.

(*ii*) The first bottom belly, bunt, the top and bottom wings, and the top and bottom jibs, jib side panels, and wing side panels (the first bottom belly and all portions of the net in front of the first bottom belly, with the exception of the square and the square side panels) must be at least two meshes long in the fore and aft direction. For these net sections, the stretched length of any single mesh must be at least 7.9 ft (240 cm), measured in a straight line from knot to knot.

(*iii*) Mesh size in all other sections must be consistent with mesh size requirements specified under § 648.80 and meet the following minimum specifications: Each mesh in the square, square side panels, and second bottom belly must be 31.5 inches (80 cm); each mesh in the first and second top belly, the first belly side panels, and the third bottom belly must be at least 7.9 inches (20 cm); and 6 inches (15.24 cm) or larger in sections following the second top belly and third bottom belly sections, all the way to the codend. The mesh size requirements of the top sections apply to the side panel sections.

(*iv*) The trawl must have a fishing circle of at least 398 ft (121.4 m). This number is calculated by separately counting the number of meshes for each section of the net at the wide, fore end of the first bottom belly, and then calculating a stretched length as follows: For each section of the net (first bottom belly, two belly side panels and first top belly) multiply the number of meshes times the length of each stretched mesh to get the stretched mesh length for that section, and then add the sections together. For example, if the wide, fore end of the bottom belly of the Ruhle Trawl is 22 meshes (and the mesh is at least 7.9 ft (240 cm)), the stretched mesh length for that section of the net is derived by multiplying 22 times 7.9 ft (240 cm) and equals 173.2 ft (52.8 m). The top and sides (x 2) of the net at this point in the trawl are 343 meshes (221 + 61 + 61, respectively) (each 7.9 inches (20 cm)), which equals 225.1 ft (68.6 m) stretched length. The stretched lengths for the different sections of mesh are added together (173.2 ft + 225.1 ft (52.8 + 68.6 m)) and result in the length of the fishing circle, in this case 398.3 ft (121.4 m).

(*v*) The trawl must have a single or multiple kite panels with a total surface area of at least 29.1 sq. ft. (2.7 sq. m) on the forward end of the square to help maximize headrope height, for the purpose of capturing rising fish. A kite panel is a flat structure, usually semi-flexible used to modify the shape of trawl and mesh openings by providing lift when a trawl is moving through the water.

(*vi*) The sweep must include rockhoppers of various sizes, which are arranged along the sweep in size order, graduated from 16–inch (40–cm) diameter in the sweep center down to 12–inch (30–cm) diameter at the wing ends. There must be six or fewer 12- to16–inch (30- to 40–cm) rockhopper discs over any 10–ft (3.0–m) length of the sweep. The 12- to16- inch (30- to 40–cm) discs (minimum size) must be spaced evenly, with one disc placed approximately every 2 ft (60 cm) along the sweep. The 12- to 16–inch (30- to 40–cm) discs must be separated by

smaller discs, no larger than 3.5 inches (8.8 cm) in diameter.

(*vii*) *Definition of incidental TAC stock areas.* For the purposes of the Regular B DAS Program, including the stocks that may not be retained by vessels as specified under § 648.86, the species stock areas are defined below. Copies of a chart depicting these areas are available from the Regional Administrator upon request.

(A) *GOM cod stock area.* The GOM cod stock area for the purposes of the Regular B DAS Program is the area defined by straight lines connecting the following points in the order stated:

GULF OF MAINE COD STOCK AREA

Point	N. lat.	W. long.
GOM1	(1)	70°00'
GOM2	42°20'	70°00'
GOM3	42°20'	67°40'
GOM4	43°50'	67°40'
GOM5	43°50'	66°50'
GOM6	44°20'	66°50'
GOM7	44°20'	67°00'
GOM8	(2)	67°00'

(1) Intersection of the north-facing coastline of Cape Cod, MA, and 70° 00' W. Long.
(2) Intersection of the south-facing Maine coastline and 67° 00' W. Long.

(B) *GB cod stock area.* The GB cod stock area for the purposes of the Regular B DAS Program is the area defined by straight lines connecting the following points in the order stated:

GEORGES BANK COD STOCK AREA

Point	N. lat.	W. long.
GB1	(1)	70°00'
GB2	42°20'	70°00'
GB3	42°20'	66°00'
GB4	42°10'	66°00'
GB5	42°10'	65°50'
GB6	42°00'	65°50'
GB7	42°00'	65°40'
GB8	40°30'	65°40'
GB9	39°00'	65°40'
GB10	39°00'	70°00'
GB11	35°00'	70°00'
GB12	35°00'	(2)

(1) Intersection of the north-facing coastline of Cape Cod, MA, and 70° 00' W. Long.
(2) Intersection of the east-facing coastline of Outer Banks, NC, and 35° 00' N. Lat.

(C) *CC/GOM yellowtail flounder stock area.* The CC/GOM yellowtail flounder stock area for the purposes of the Regular B DAS Program is the area defined by straight lines connecting the following points in the order stated:

CC/GOM YELLOWTAIL FLOUNDER STOCK AREA

Point	N. lat.	W. long.
CCGOM1	43°00'	(1)
CCGOM2	42°20'	70°00'
CCGOM3	42°20'	66°00'
CCGOM4	42°10'	66°00'
CCGOM5	42°10'	65°50'
CCGOM6	42°00'	65°50'
CCGOM7	42°00'	65°40'
CCGOM8	40°30'	65°40'
CCGOM9	39°00'	65°40'
CCGOM10	(2)	
CCGOM11	35°00')	(3)
CCGOM12	35°00')	(4)
CCGOM13	(3)	

1 Intersection with the New Hampshire coastline.
2 Intersection of the south-facing shoreline of Cape Cod, Massachusetts.
3 Intersection with the east-facing shoreline of Cape Cod, Massachusetts.
4 Intersection with the west-facing shoreline of Massachusetts

(D) *SNE/MA yellowtail flounder stock area.* The SNE/MA stock area for the purposes of the Regular B DAS Program is the area bounded on the north, east, and south by straight lines connecting the following points in the order stated:

SNE/MA YELLOWTAIL FLOUNDER STOCK AREA

Point	N. lat.	W. long.
SNEMA1	40°00'	74°00'
SNEMA2	40°00'	72°00'
SNEMA3	40°30'	72°00'
SNEMA4	40°30'	69°30'
SNEMA5	41°00'	69°30'
SNEMA6	41°00'	69°00'
SNEMA7	41°30'	70°00'
SNEMA8	39°00'	70°00'
SNEMA9	41°00'	70°00'
SNEMA10	41°00'	70°30'
SNEMA11	41°30'	70°30'
SNEMA12	(1)	72°00'
SNEMA13	(2)	72°00'
SNEMA14	(3)	73°00'
SNEMA15	40°30'	73°00'
SNEMA16	40°30'	74°00'
SNEMA17	40°00'	74°00'

(1) South-facing shoreline of Connecticut.
(2) North-facing shoreline of Long Island, New York.
(3) South-facing shoreline of Long Island, New York.

(E) *SNE/MA winter flounder stock area.* The SNE winter flounder stock area, for the purposes of the Regular B DAS Program and the prohibition on retention of winter flounder specified under § 648.86, is the area defined by straight lines connecting the following points in the order stated:

SOUTHERN NEW ENGLAND/MID-ATLANTIC WINTER FLOUNDER STOCK AREA

Point	N. lat.	W. long.
SNEW1	(1)	70°00'
SNEW2	42°20'	70°00'
SNEW3	42°20'	68°50'
SNEW4	39°50'	68°50'
SNEW5	39°50'	71°40'
SNEW6	39°00'	71°40'
SNEW7	39°00'	70°40'
SNEW8	35°00'	70°00'
SNEW9	35°00'	(2)

(1) Intersection of the north-facing Coastline of Cape Cod, MA, and 70° 00' W. Long.
(2) The intersection of the east-facing coastline of Outer Banks, NC, and 35° 00' N. Lat.

(F) *Windowpane flounder northern stock area.* The windowpane flounder northern stock area, for the purposes of prohibition on retention of northern windowpane flounder specified under § 648.86, is the area defined by straight lines connecting the following points in the order stated:

WINDOWPANE FLOUNDER NORTHERN STOCK AREA:

Point	N. lat.	W. long.
G12	(1)	70°00'
WIN1	41°20'	70°00'
WIN2	41°20'	69°50'
WIN3	41°10'	69°50'
WIN4	41°10'	69°50'
WIN5	41°00'	69°30'
WIN6	41°00'	68°50'
WIN7	39°50'	68°50'
WIN8	39°50'	69°00'
WIN9	39°00'	69°00'
WIN10	39°00'	(2)

(1) South-facing coastline of Cape Cod, MA.
(2) Intersection of 39° 00' N. Lat. and the boundary of the EEZ.

(viii) *Closure and in-season modification to the Regular B DAS Program.* The Regional Administrator, based upon information required under §§ 648.7, 648.9, 648.10, or this paragraph 648.85, and any other relevant information, may, in a manner consistent with the Administrative Procedure Act, may prohibit the use of Regular B DAS, modify possession restrictions, or implement other measures, including a partial closure for the Regular B DAS Program, for the duration of a quarter or fishing year, if it is projected that continuation of the Regular B DAS Program would undermine the achievement of the objectives of the FMP or Regular B DAS Program. Reasons for modification or termination of the program include, but are not limited to, the following: Inability to constrain catches to the Incidental Catch TACs; evidence of excessive discarding; a significant

difference in flipping rates between observed and unobserved trips; or insufficient observer coverage to adequately monitor the program.

* * * * *

10. In § 648.86, paragraphs (b), (e), and (j) are suspended, and paragraphs (l), (m), and (n) are added to read as follows:

§ 648.86 NE multispecies possession restrictions.

* * * * *

(l) *Cod*—(1) *GOM cod landing limit*. (i) Except as provided in paragraphs (l)(1)(ii) and (l)(4) of this section, or unless otherwise restricted under § 648.85, a vessel fishing under a NE multispecies DAS may land only up to 800 lb (362.9 kg) of cod during the first 24–hr period after the vessel has started a trip on which cod were landed (e.g., a vessel that starts a trip at 6 a.m. may call out of the DAS program at 11 a.m. and land up to 800 lb (362.9 kg), but the vessel cannot land any more cod on a subsequent trip until at least 6 a.m. on the following day). For each trip longer than 24 hr, a vessel may land up to an additional 800 lb (362.9 kg) for each additional 24–hr block of DAS fished, or part of an additional 24–hr block of DAS fished, up to a maximum of 4,000 lb (1,814.4 kg) per trip (e.g., a vessel that has been called into the DAS program for more than 24 hr, but less than 48 hr, may land up to, but no more than, 1,600 lb (725.7 kg) of cod). A vessel that has been called into only part of an additional 24–hr block of a DAS (e.g., a vessel that has been called into the DAS program for more than 24 hr, but less than 48 hr) may land up to an additional 800 lb (362.9 kg) of cod for that trip, provided the vessel complies with the provisions of paragraph (l)(1)(ii) of this section. Cod on board a vessel subject to this landing limit must be separated from other species of fish and stored so as to be readily available for inspection.

(ii) A vessel that has been called into or declared into only part of an additional 24–hr block may come into port with and offload cod up to an additional 800 lb (362.9 kg), provided that the vessel operator, with the exception of vessels fishing in the Interim Differential DAS Area under the restrictions of § 648.82(e)(4)(i), complies with the following:

(A) For a vessel that is subject to the VMS provisions specified under § 648.10(b), the vessel declares through VMS that insufficient DAS have elapsed in order to account for the amount of cod onboard and, after returning to port, does not depart from a dock or mooring in port, unless transiting as allowed under paragraph (l)(3) of this section, until the rest of the additional 24–hr block of the DAS has elapsed, regardless of whether all of the cod on board is offloaded (e.g., a vessel that has been in the DAS program for 25 hr prior to crossing the VMS demarcation line on the return to port may land only up to 1,600 lb (725.7 kg) of cod, provided the vessel does not declare another trip or leave port until 48 hr have elapsed from the beginning of the trip).

(B) For a vessel that has been authorized by the Regional Administrator to utilize the DAS call-in system, as specified under § 648.10(c), in lieu of VMS, the vessel does not call out of the DAS program as described under § 648.10(c)(3) and does not depart from a dock or mooring in port, unless transiting as allowed in paragraph (l)(3) of this section, until the rest of the additional 24–hr block of DAS has elapsed, regardless of whether all of the cod on board is offloaded (e.g., a vessel that has been called into the DAS program for 25 hr at the time of landing may land only up to 1,600 lb (725.6 kg) of cod, provided the vessel does not call out of the DAS program or leave port until 48 hr have elapsed from the beginning of the trip).

(2) *GB cod landing and maximum possession limits*. (i) Unless otherwise restricted under § 648.85 or the provisions of paragraph (l)(2)(ii) of this section, or unless exempt from the landing limit under paragraph (l)(1) of this section as authorized under the Sector provisions of § 648.87, a NE multispecies DAS vessel may land up to 1,000 lb (453.6 kg) of cod per DAS, or part of a DAS, provided it complies with the requirements specified at paragraph (l)(4) of this section and this paragraph (l)(2). A NE multispecies DAS vessel may land up to 1,000 lb (453.6 kg) of cod during the first 24–hr period after such vessel has started a trip on which cod were landed (e.g., a vessel that starts a trip at 6 a.m. may call out of the DAS program at 11 a.m. and land up to 1,000 lb (453.6 kg) of cod, but the vessel cannot land any more cod on a subsequent trip until at least 6 a.m. on the following day). For each trip longer than 24 hr, a vessel may land up to an additional 1,000 lb (453.6 kg) of cod for each additional 24–hr block of DAS fished, or part of an additional 24–hr block of DAS fished, up to a maximum of 10,000 lb (4,536 kg) of cod per trip (e.g., a vessel that has been called into the DAS program for more than 24 hr, but less than 48 hr, may land up to, but no more than, 2,000 lb (907.2 kg) of cod). A vessel that has been called into only part of an additional 24–hr block of a DAS (e.g., a vessel that has been called into the DAS program for more than 24 hr, but less than 48 hr) may land up to an additional 1,000 lb (453.6 kg) of cod for that trip, provided the vessel complies with the provisions of paragraph (l)(2)(ii) of this section. Cod on board a vessel subject to this landing limit must be separated from other species of fish and stored so as to be readily available for inspection.

(ii) A vessel that has been called into or declared into only part of an additional 24–hr block may come into port with and offload cod up to an additional 1,000 lb (453.6 kg), provided that the vessel operator, with the exception of vessels fishing in the Interim Differential DAS Area under the restrictions of § 648.82(e)(4)(i), complies with the following:

(A) For a vessel that has been authorized by the Regional Administrator to utilize the DAS call-in system as specified under § 648.10(c), in lieu of VMS, the vessel does not call out of the DAS program as described under § 648.10(c)(3) and does not depart from a dock or mooring in port, unless transiting, as allowed in paragraph (l)(3) of this section, until the rest of the additional 24–hr block of DAS has elapsed, regardless of whether all of the cod on board is offloaded (e.g., a vessel that has been called into the DAS program for 25 hr at the time of landing may land only up to 2,000 lb (907.2 kg) of cod, provided the vessel does not call out of the DAS program or leave port until 48 hr have elapsed from the beginning of the trip.)

(B) For a vessel that is subject to the VMS provisions specified under § 648.10(b), the vessel declares through VMS that insufficient DAS have elapsed in order to account for the amount of cod onboard, and after returning to port does not depart from a dock or mooring in port, unless transiting, as allowed under paragraph (l)(3) of this section, until the rest of the additional 24–hr block of the DAS has elapsed, regardless of whether all of the cod on board is offloaded (e.g., a vessel that has been in the DAS program for 25 hr prior to crossing the VMS demarcation line on the return to port may land only up to 2,000 lb (907.2 kg) of cod, provided the vessel does not declare another trip or leave port until 48 hr have elapsed from the beginning of the trip.)

(3) *Transiting*. A vessel that has exceeded the cod landing limit as specified in paragraphs (l)(1) and (2) of this section, and that is, therefore, subject to the requirement to remain in port for the period of time described in paragraphs (l)(1)(ii)(A) and (l)(2)(ii)(A) of this section, may transit to another port during this time, provided that the vessel operator notifies the Regional

Administrator, either at the time the vessel reports its hailed weight of cod, or at a later time prior to transiting, and provides the following information: Vessel name and permit number, destination port, time of departure, and estimated time of arrival. A vessel transiting under this provision must stow its gear in accordance with one of the methods specified in § 648.23(b) and may not have any fish on board the vessel.

(4) *Exemption*. A vessel fishing under a NE multispecies DAS is exempt from the landing limit described in paragraph (l)(1) of this section when fishing south of the Gulf of Maine Regulated Mesh Area, defined in § 648.80(a)(1), provided that it complies with the requirement of this paragraph (l)(4).

(i) *Declaration*. With the exception of vessels declared into the U.S./Canada Management Area, as described under § 648.85(a)(3)(ii), a NE multispecies DAS vessel that fishes or intends to fish south of the line described in this paragraph (l)(4), under the cod trip limits described under paragraph (l)(2) of this section, must, prior to leaving the dock, declare its intention to do so through the VMS, in accordance with instructions to be provided by the Regional Administrator. In lieu of a VMS declaration, the Regional Administrator may authorize such vessels to obtain a letter of authorization. If a letter of authorization is required, such vessel may not fish north of the exemption area for a minimum of 7 consecutive days (when fishing under the NE multispecies DAS program), and must carry the authorization letter on board.

(ii) A vessel exempt from the GOM cod landing limit may not fish north of the line specified in this paragraph (l)(4) for the duration of the trip, but may transit the GOM Regulated Mesh Area, provided that its gear is stowed in accordance with the provisions of § 648.23(b). A vessel fishing north and south of the line on the same trip is subject to the most restrictive applicable cod trip limit.

(m) *White hake*. Unless otherwise restricted under this part, a vessel issued a NE multispecies DAS permit, a limited access Handgear A permit, an open access Handgear B permit, or a monkfish limited access permit and fishing under the monkfish Category C or D permit provisions, may land up to 2,000 lb (907.2 kg) of white hake per DAS, or any part of a DAS, up to 10,000 lb (4,536 kg) per trip.

(n) *Zero retention stocks*—(1) *SNE winter flounder*. Private recreational vessels fishing in the EEZ, and vessels issued a NE multispecies permit, may not fish for, possess, or land winter flounder caught in the SNE/MA winter flounder stock area, defined in § 648.85(b)(10)(v)(E). Vessels may transit this area with GOM or GB winter flounder on board the vessel, provided that gear is stowed in accordance with the provisions of § 648.23(b). Vessels fishing for winter flounder in multiple stock areas would be subject to the most restrictive possession limit.

(2) *Northern windowpane flounder*. Vessels issued a NE multispecies permit may not fish for, possess, or land windowpane flounder caught in the northern windowpane flounder stock area, defined in § 648.85(b)(10)(v)(F). Vessels may transit this area with southern windowpane flounder on board, provided that gear is stowed in accordance with the provisions of § 648.23(b) or § 648.89(f), as appropriate. Vessels fishing for windowpane flounder in multiple stock areas would be subject to the most restrictive possession limit.

(3) *Ocean pout*. Vessels issued a NE multispecies permit may not fish for, possess or land ocean pout.

11. In § 648.89, paragraphs (b)(1), (c)(1)(v), and (c)(2) are suspended, and paragraphs (b)(5), (c)(1)(vi), (c)(5), and (f) are added to read as follows:

§ 648.89 Recreational and charter/party vessel restrictions.

* * * * *

(b) * * *

(5) *Minimum fish sizes*. Unless further restricted under paragraph (b)(3) of this section, persons aboard charter or party vessels permitted under this part and not fishing under the NE multispecies DAS program, and recreational fishing vessels in or possessing fish from the EEZ, may not possess fish smaller than the minimum fish sizes, measured in total length (TL), as follows:

MINIMUM FISH SIZES (TL) FOR CHARTER, PARTY, AND PRIVATE RECREATIONAL VESSELS

Species	Sizes
Cod	22in (58.4 cm)
Haddock	18in (45.7 cm)
Pollock	19in (48.3 cm)
Witch flounder (gray sole)	14in (35.6 cm)
Yellowtail flounder	13in (33.0 cm)
Atlantic halibut	36in (91.4 cm)
American plaice	14in (35.6 cm)
Winter flounder (blackback)	12in (30.5 cm)
Redfish	9in (22.9 cm)

(c) * * *

(1) * * *

(vi) *Seasonal GOM cod possession prohibition*. Persons aboard private recreational fishing vessels fishing in the GOM Regulated Mesh Area specified under § 648.80(a)(1) may not fish for, possess, or land any cod from November 1 through April 15. Private recreational vessels in possession of cod caught outside the GOM Regulated Mesh Area may transit this area, provided all bait and hooks are removed from fishing rods and any cod on board has been gutted and stored.

* * * * *

(5) *Charter/party vessels*. Charter/party vessels fishing any part of a trip in the GOM Regulated Mesh Area, as defined in § 648.80(a)(1), are subject to the following possession limit restrictions:

(i) Unless further restricted by the Seasonal GOM Cod Possession Prohibition, specified under paragraph (c)(5)(v) of this section, each person on a charter/party vessel may possess no more than 10 cod per day in, or harvested from, the EEZ.

(ii) For purposes of counting fish, fillets shall be converted to whole fish at the place of landing by dividing the number of fillets by two. If fish are filleted into a single (butterfly) fillet, such fillet shall be deemed to be from one whole fish.

(iii) Cod harvested by charter/party vessels with more than one person aboard may be pooled in one or more containers. Compliance with the possession limits will be determined by dividing the number of fish on board by the number of persons on board. If there is a violation of the possession limits on board a vessel carrying more than one person, the violation shall be deemed to have been committed by the owner or operator of the vessel.

(iv) Cod must be stored so as to be readily available for inspection.

(v) Seasonal GOM cod possession prohibition. Persons aboard charter/party fishing vessels fishing in the GOM Regulated Mesh Area specified under § 648.80(a)(1) may not fish for or possess any cod from November 1 through April 15. Charter/party vessels in possession of cod caught outside the GOM Regulated Mesh Area may transit this area, provided all bait and hooks are removed from fishing rods and any cod on board has been gutted and stored.

* * * * *

(f) *SNE/MA winter flounder retention prohibition*. Private recreational and charter/party vessels fishing in the SNE/MA winter flounder stock area as defined in § 648.85(b)(10)(v)(E), may not fish for, posses, or land winter flounder. Recreational vessels in possession of winter flounder caught outside of the

SNE/MA winter flounder may transit this area, provided all bait and hooks are removed from fishing rods and any winter flounder on board has been stored.

[FR Doc. E9–846 Filed 1–15–09; 8:45 am]

BILLING CODE 3510–22–S

DEPARTMENT OF COMMERCE

National Oceanic and Atmospheric Administration

50 CFR Part 679

[Docket No. 080612764–8801–01]

RIN 0648–AW94

Fisheries of the Exclusive Economic Zone Off Alaska; Groundfish Fisheries of the Bering Sea and Aleutian Islands Management Area and Gulf of Alaska, Seabird Avoidance Requirements Revisions for International Pacific Halibut Commission Regulatory Area 4E

AGENCY: National Marine Fisheries Service (NMFS), National Oceanic and Atmospheric Administration (NOAA), Commerce.

ACTION: Proposed rule; request for comments.

SUMMARY: NMFS issues a proposed rule that would revise the seabird avoidance requirements for the hook–and–line groundfish and halibut fisheries in International Pacific Halibut Commission Area 4E. The proposed rule would eliminate seabird avoidance requirements for hook–and–line vessels less than or equal to 55 ft (16.8 m) length overall in portions of Area 4E in the eastern Bering Sea. This action is necessary to revise seabird avoidance measures based on the latest scientific information and to reduce unnecessary regulatory burdens and associated costs.

DATES: Written comments must be received by February 17, 2009.

ADDRESSES: Send comments to Sue Salveson, Assistant Regional Administrator, Sustainable Fisheries Division, Alaska Region, NMFS, Attn: Ellen Sebastian. You may submit comments, identified by 0648–AW94, by any one of the following methods:

- Electronic Submissions: Submit all electronic public comments via the Federal eRulemaking Portal website at *http://www.regulations.gov*.
- Mail: P. O. Box 21668, Juneau, AK 99802.
- Fax: (907) 586–7557.
- Hand delivery to the Federal Building: 709 West 9th Street, Room 420A, Juneau, AK.

All comments received are a part of the public record and will generally be posted to *http://www.regulations.gov* without change. All Personal Identifying Information (e.g., name, address) voluntarily submitted by the commenter may be publicly accessible. Do not submit Confidential Business Information or otherwise sensitive or protected information.

NMFS will accept anonymous comments (enter N/A in the required fields, if you wish to remain anonymous). Attachments to electronic comments will be accepted in Microsoft Word, Excel, WordPerfect, or Adobe portable document file (pdf) formats only.

Copies of the map of the seabird avoidance measures in Area 4E, and the Environmental Assessment/Regulatory Impact Review/Initial Regulatory Flexibility Analysis (EA/RIR/IRFA) for this action may be obtained from the Alaska Region NMFS address above or from the Alaska Region NMFS website at *http://www.alaskafisheries.noaa.gov*.

FOR FURTHER INFORMATION CONTACT: Melanie Brown, 907–586–7228.

SUPPLEMENTARY INFORMATION: The groundfish fisheries in the exclusive economic zone (EEZ) off Alaska are managed under the Fishery Management Plan for Groundfish of the Bering Sea and Aleutian Islands Management Area and the Fishery Management Plan for Groundfish of the Gulf of Alaska (FMPs). The North Pacific Fishery Management Council (Council) prepared the FMPs under the authority of the Magnuson–Stevens Fishery Conservation and Management Act (Magnuson–Stevens Act), 16 U.S.C. 1801, *et seq.* Regulations implementing the FMPs appear at 50 CFR part 679. General regulations governing U.S. fisheries also appear at 50 CFR part 600.

Management of the Pacific halibut fisheries in and off Alaska is governed by an international agreement between Canada and the United States. This agreement, entitled the ''Convention Between the United States of America and Canada for the Preservation of the Halibut Fishery of the Northern Pacific Ocean and Bering Sea'' (Convention), was signed at Ottawa, Canada, on March 2, 1953, and was amended by the ''Protocol Amending the Convention,'' signed at Washington, D.C., March 29, 1979. The Convention is implemented in the United States by the Northern Pacific Halibut Act of 1982 (Halibut Act). The directed commercial Pacific halibut fishery in Alaska is managed under an individual fishing quota (IFQ) program, as is the fixed gear sablefish fishery. The IFQ Program is a limited access management system. This program is codified at 50 CFR part 679.

Background

The purpose of this proposed action is to revise the seabird avoidance measures currently implemented for the hook–and–line groundfish and halibut fisheries based on the best available information regarding seabird occurrence and potential fishing vessel interactions. Seabird avoidance measures reduce the incidental mortality of seabirds in the hook–and–line fisheries off Alaska. Since 1997, NMFS has implemented and revised seabird avoidance measures to mitigate interactions between the federal hook–and–line fisheries and seabirds (62 FR 23176, April 29, 1997; 63 FR 11161, March 6, 1998; 69 FR 1930, January 13, 2004; and 72 FR 71601, December 18, 2007).

NMFS compiled seabird sightings data from the following sources: from 1988–2004 records from seabird observers on the U.S. Fish and Wildlife Service's (FWS) research vessel M/V TIGLAX; from incidental sightings by biologists, fishermen, seamen, fisheries observers, and birdwatchers provided to the FWS; from the International Pacific Halibut Commission (IPHC); from the Alaska Natural Heritage Program; from historical sightings documented in published literature; from satellite tagging data; and from the North Pacific Pelagic Seabird Database. The EA/RIR/IRFA for this action describes this information (see **ADDRESSES**). This information showed that seabird species of concern are not likely to occur in portions of Area 4E where fishing vessels using hook–and–line gear may operate; and therefore, it is not likely that interactions between the fishing vessels and these seabird species of concern would occur in those portions of Area 4E. Thus, the Council recommended revisions to the seabird avoidance measures in a portion of Area 4E. These revisions would eliminate seabird avoidance measures in the portion of Area 4E where seabird species of concern are not likely to occur. The revisions would apply to vessels greater than 26 ft (7.9 m) to less than or equal to 55 ft (16.8 m) length overall (LOA) fishing in the EEZ. Vessels less than or equal to 26 ft (7.9 m) LOA are not required to use seabird avoidance measures. Vessels greater than 55 ft (16.8 m) LOA would continue to be required to use seabird avoidance measures in all of Area 4E. Vessels this size and larger are more likely to interact with other seabirds because of the greater amount of offal discharge and greater number of hooks fished

compared to smaller vessels. Vessels greater than 55 ft (16.8 m) LOA are capable of efficiently deploying seabird avoidance gear, as further discussed in the Classification section.

Species of concern of pelagic seabirds (particularly the Endangered Species Act (ESA)–listed short–tailed albatross) are rarely observed in most of Area 4E; and therefore, are not likely to interact with hook–and–line fisheries in most of this area (Figure 1). Pelagic seabird species of concern that may interact with hook–and–line vessels have been observed and documented in the southern portion of Area 4E west of Bristol Bay. The seabird avoidance measures would continue to be required in this area for all hook–and–line vessels greater than 26 feet (7.9 m) LOA.

BILLING CODE 3510–22–S

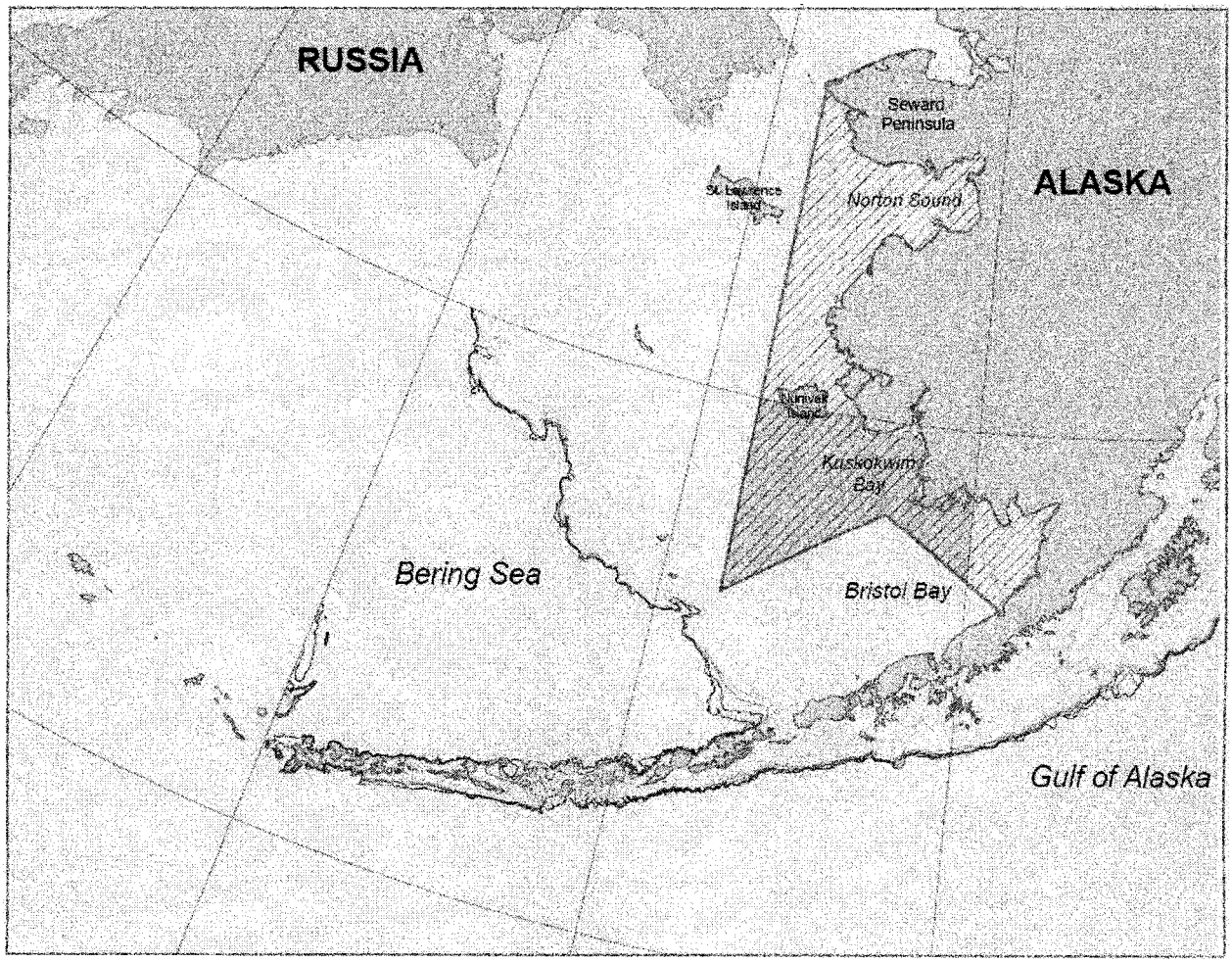

Figure 1. International Pacific Halibut Commission Regulatory Area 4E is shown as the striated area.

Notes: Under the proposed rule, hook-and-line vessels > 26 ft (7.9 m) LOA fishing in the shaded portion of the striated area would be required to continue using seabird avoidance measures. In the striated area of Area 4E, vessels > 26 ft (7.9 m) to 55 ft (16.8 m) would be exempt from seabird avoidance measures, and vessels > 55ft (16.8 m) would continue to use seabird avoidance measures. Vessels ≤ 26ft (7.9 m) would continue to be exempt from seabird avoidance measures throughout all of Area 4E.

BILLING CODE 3510–22–C

Eliminating unnecessary seabird avoidance measures is intended to remove associated economic burdens on affected vessels. These revisions are the result of adaptive management using the best available information to focus regulatory requirements where they are needed. Research results and the environmental and economic considerations of the proposed action are summarized in the EA/RIR/IRFA for this action (see **ADDRESSES**).

Proposed Regulatory Amendments

In June 2008, the Council unanimously recommended revisions to the seabird avoidance measures in a portion of Area 4E. These measures would apply to operators of vessels fishing for Pacific halibut in the IFQ and Community Development Quota (CDQ) management programs in waters from 0 nm to 200 nm; for IFQ sablefish in waters from 0 nm to 200 nm; and for groundfish with hook–and–line gear in the EEZ.

The proposed rule to implement the Council's recommendations would reorganize and revise § 679.24(e)(3) and Table 20 to part 679 to clarify existing regulatory text and to eliminate unnecessary seabird avoidance gear requirements for all hook–and–line vessels less than or equal to 55 ft (16.8 m) LOA fishing in Area 4E, except in the southern portion of Area 4E as shown in Figure 1. Hook–and–line vessels fishing in the portion of Area 4E south of 60 degrees N latitude and west of 160 degrees W longitude would continue to be required to use seabird avoidance measures. The best available scientific information regarding seabird observations in the Area 4E indicates that ESA–listed seabirds and other seabird species of concern are not likely to occur in Area 4E, except for the southern portion where seabird avoidance measures would continue to be required. Therefore, the proposed rule would eliminate seabird avoidance measures where interactions with seabird species of concern is not likely to occur and ensure that such measures are used in waters where interactions with seabird species of concern are likely to occur.

Table 19 to part 679 also would be revised to correct cross references. Under the descriptions for the seabird avoidance gear and other methods, the reference to § 679.24(e)(5) would be corrected to read § 679.24(e)(4).

Classification

Pursuant to section 304(b)(1)(A) of the Magnuson–Stevens Act, the NMFS Assistant Administrator has determined that this proposed rule is consistent with the FMPs, other provisions of the Magnuson–Stevens Act, the Halibut Act, and other applicable law, subject to further consideration after public comment.

This proposed rule has been determined to be not significant for the purposes of Executive Order 12866.

An IRFA was prepared as required by section 603 of the Regulatory Flexibility Act (RFA). The IRFA describes the economic impact this proposed rule, if adopted, would have on small entities. A description of the action, why it is being considered, and the legal basis for this action are contained at the beginning of this section in the preamble and in the **SUMMARY** section of the preamble. A summary of the analysis follows. A copy of this analysis is available from NMFS (see **ADDRESSES**).

The vessels that fish for groundfish or halibut with hook–and–line gear in the waters off Alaska would be directly regulated by the proposed action. The seabird avoidance measures presently in place, and the alternatives and options considered, apply directly to the operator of a vessel deploying hook–and–line gear in the waters off Alaska. These regulations apply to the operation of a vessel and not directly to the halibut or sablefish IFQ–holder unless the holder is also the owner/operator of a vessel. Multiple IFQs may be used on a single vessel. Thus, the IRFA analysis of large and small entities is conducted at the vessel level and not the IFQ level. This analysis is complicated by the fact that the halibut fishery is managed somewhat separately from the Federal groundfish fisheries, resulting in multiple data sources being synthesized for the analysis. Thus, data from multiple sources and years have been used to estimate the numbers of large and small entities.

Approximately 70 vessels ranging between 26 ft (7.9 m) and 55 ft (16.8 m) LOA, participated in the CDQ Pacific halibut fishery in Area 4E. The 70 vessels that fished in the CDQ halibut fishery in Area 4E are mostly small vessels, 66 are less than 33 ft (10.1 m) LOA. These small vessels fish in the salmon and herring fisheries in the Bristol Bay and Togiak Bay areas of Alaska. None of the 70 vessels harvest groundfish in other Federal fisheries; thus, comprehensive annual revenue data are not available for these vessels in the way that they are for vessels that participate in Federal groundfish fisheries. However, given the small size of these vessels and the small scale of the fisheries they participate in, it is not expected that any of these vessels would earn more than $4 million in annual revenue. Thus, these 70 vessels are believed to be small entities, as defined by Small Business Administration criteria.

Comprehensive annual revenue data, from all sources, are available for the 92 vessels that participated in the Federal hook–and–line groundfish fisheries in the Bering Sea and Aleutian Islands management area in 2006. In 2006, 52 hook and line catcher vessels (CVs) and 6 hook–and–line catcher processors (CPs) reported that they caught and processed less than $4 million in gross ex–vessel or gross first wholesale product value. Thus, these 58 vessels are considered small entities.

In total, this analysis has identified 128 vessels that are believed to be directly regulated small entities. A review of American Fisheries Act (AFA) permit data revealed that none of the 128 vessels with gross revenue less than $4 million in 2006 are AFA–permitted vessels. Because AFA affiliations are relatively stable across years, none of these vessels are large because of AFA affiliations.

The IRFA indicates that this proposed action is not likely to impose significant costs on directly regulated small entities. The action reduces the regulatory burden on hook–and–line vessels 55 ft (16.8 m) LOA or less by eliminating all seabird avoidance requirements for these vessels operating in portions of Area 4E. The reduced regulatory burden under the proposed action would tend to reduce the costs for the directly regulated vessels. Vessel operational cost of production data are not presently collected, making it impossible to quantify the net effect on operational costs that might occur under each alternative and option.

Since the initial adoption of seabird avoidance regulations, research has been conducted to more precisely identify the geographical distribution and range of seabirds of concern, and on the efficacy of required seabird avoidance devices. Recent research has shown the likely locations of interaction between seabirds of concern and fishing vessels in Area 4E and has provided the information necessary to identify waters where seabird avoidance measures may not be necessary. The proposed action, which is intended to reduce the economic burden placed on small entities operating in these fisheries, is a direct result of this research.

An IRFA must describe any significant alternatives to the proposed rule that accomplish the stated objectives of the proposed action, consistent with applicable statutes, and that would minimize any significant economic impact of the proposed rule

on small entities. Including status quo, this proposed action has four alternatives and two options.

Alternative 1 is the status quo, which would require the continued use of seabird avoidance measures for all hook–and–line vessels fishing for groundfish or halibut in the federal waters of Area 4E. This alternative would not provide economic relief; and therefore, does not meet the objectives of this action.

Alternative 2 would exempt hook–and–line vessels 26 ft (7.9 m) to 32 ft (9.8 m) LOA from seabird avoidance measures while fishing for groundfish or halibut in Area 4E. This alternative would provide economic relief to only vessels in this size class, partially meeting the objectives of the action for the hook–and–line fleet.

Alternative 3 (preferred) would exempt hook–and–line vessels 26 ft (7.9 m) to 55 ft (16.8 m) LOA from seabird avoidance measures while fishing for groundfish or halibut in Area 4E. This alternative would provide more economic relief to the hook–and–line fleet than Alternatives 1 and 2.

Alternative 4 would exempt all hook–and–line vessels from seabird avoidance measures while fishing for groundfish or halibut in Area 4E. This alternative would provide the most economic relief to the hook–and–line fleet compared to the other alternatives, but the economic relief in comparison to Alternative 3 is not likely a large difference. Very few vessels over 55 ft (16.8 m) LOA participate in the hook–and–line fishery in Area 4E, and the larger vessels have the capability to use seabird avoidance gear based on larger deck space, adequate superstructure, and available crew.

Two options were also considered for this action. Option 1 (preferred) would require full compliance with the seabird avoidance measures inside the shaded portion of Area 4E, as shown in Figure 1, while option 2 would require only the use of a buoy bag in the shaded area. Option 1 would require more costs to deploy seabird avoidance gear that meets the streamer standards than option 2, which required a buoy bag with no standards and no supporting superstructure for streamer lines. Because the buoy bag is not likely as effective as the streamer lines, option 1 is more protective of short–tailed albatross and other seabirds that may occur in the shaded area shown in Figure 1.

The preferred action is Alternative 3 with option 1, which provides more economic relief than Alternatives 1 or 2 with option 1. Alternative 3 and option 1 were selected because most of the vessels participating in the hook–and–line fishery in Area 4E are less than 55 ft (16.8 m) LOA. The use of seabird avoidance gear on these vessels can be difficult because of limited deck space for the gear or the lack of superstructure to support the streamer lines. Smaller vessels also are likely to have fewer crew members available to handle the gear. Only Alternative 4 has smaller economic impacts on the directly regulated small entities than Alternative 3. Because very few large vessels participate in the Area 4E fishery, Alternative 4 is not likely to provide much more economic relief than Alternative 3. Alternative 4 was not chosen because larger vessels are more likely to have adequate deck space, superstructure, and crew available to allow for safe and effective use of seabird avoidance gear. Because of the presence of short–tailed albatross in the shaded area of Figure 1, the Council recommended option 1 for vessels fishing in this area to ensure the continued protection of short–tailed albatross from potential incidental takes by any hook–and–line vessel. Option 1 has a marginally greater potential adverse economic impact on directly regulated small entities than does option 2, but option 1 more fully achieves the objectives of the proposed action and is necessary for the protection of short–tailed albatross and other seabirds that may occur in the shaded area of Figure 1, making it more compliant with other applicable law (e.g., ESA).

No Federal rules duplicate, overlap, or conflict with the proposed action.

An informal consultation with the FWS under the Endangered Species Act was concluded for this proposed action on September 15, 2008. As a result of the informal consultation, NMFS determined that fishing activities under this rule are not likely to adversely affect endangered or threatened species or their designated critical habitat. The FWS concurred with this determination.

List of Subjects in 50 CFR Part 679

Alaska, Fisheries, Recordkeeping and reporting requirements.

Dated: January 12, 2009.

Samuel D. Rauch III,

Deputy Assistant Administrator for Regulatory Programs, National Marine Fisheries Service.

For reasons set out in the preamble, NMFS proposes to amend 50 CFR part 679 as follows:

PART 679—FISHERIES OF THE EXCLUSIVE ECONOMIC ZONE OFF ALASKA

1. The authority citation for part 679 is revised to read as follows:

Authority: 16 U.S.C. 773 *et seq.*; 1801 *et seq.*; 3631 *et seq.*; Pub. L. 108 447.

2. In § 679.24, redesignate paragraphs (e)(3)(i) and (e)(3)(ii) as paragraphs (e)(3)(ii) and (e)(3)(iii), respectively; add new paragraph (e)(3)(i); and revise paragraph (e)(3) introductory text to read as follows:

§ 679.24 Gear limitations.

* * * * *

(e) * * *

(3) *Seabird avoidance gear requirements.* (See also Table 20 to this part.)

(i) The operator of a vessel identified in paragraph (e)(1) of this section must comply with paragraph (e)(3)(ii) or (e)(3)(iii) of this section while fishing with hook–and–line gear for groundfish, IFQ halibut, CDQ halibut, or IFQ sablefish in Federal waters (EEZ) and for IFQ halibut, CDQ halibut, or IFQ sablefish in the State of Alaska waters, excluding fishing in

(A) NMFS Reporting Area 649 (Prince William Sound);

(B) State waters of Cook Inlet;

(C) NMFS Reporting Area 659 (Eastern GOA Regulatory Area; Southeast Inside District), but including waters in the areas south of a straight line at 56°17.25 N. lat. between Point Harris and Port Armstrong in Chatham Strait, State statistical areas 325431 and 325401, and west of a straight line at 136°21.17 E. long. from Point Wimbledon extending south through the Inian Islands to Point Lavinia; and

(D) Area 4E with a vessel less than or equal to 55 ft (16.8 m) LOA, but including fishing in waters south of 60°00.00 N. lat. and west of 160°00.00 W. long.

* * * * *

3. Tables 19 and 20 to part 679 are revised to read as follows:

TABLE 19 TO PART 679—SEABIRD AVOIDANCE GEAR CODES

VESSEL LOGBOOK	
CODE	SEABIRD AVOIDANCE GEAR OR METHOD.
1	*Paired Streamer Lines:* Used during deployment of hook–and–line gear to prevent birds from taking hooks. Two streamer lines used, one on each side of the main groundline. Each streamer line consists of three components: a length of line, streamers attached along a portion of the length and one or more float devices at the terminal end. See performance and material standards at § 679.24(e)(4)(iii).
2	*Single Streamer Line:* Used during deployment of hook–and–line gear to prevent birds from taking hooks. The streamer line consists of three components: a length of line, streamers attached along a portion of the length and one or more float devices at the terminal end. See performance and material standards at § 679.24(e)(4)(ii).
3	*Single Streamer Line, used with Snap Gear:* Used during the deployment of snap gear to prevent birds from taking hooks. The streamer line consists of three components: a length of line, streamers attached along a portion of the length and one or more float devices at the terminal end. See performance and material standards at § 679.24(e)(4)(iv).
4	*Buoy Bag Line:* Used during the deployment of hook–and–line gear to prevent birds from taking hooks. A buoy bag line consists of two components: a length of line (without streamers attached) and one or more float devices at the terminal end. See performance and material standards at § 679.24(e)(4)(i).
Other Device used in conjunction with Single Streamer Line or Buoy Bag Line	
5	*Add weights to groundline:* Applying weights to the groundline for the purpose of sinking the hook–and–line gear more quickly and preventing seabirds from accessing the baited hooks.
6	*Additional Buoy Bag Line or Single Streamer Line:* Using a second buoy bag line or streamer line for the purpose of enhancing the effectiveness of these deterrent devices at preventing seabirds from accessing baited hooks.

TABLE 19 TO PART 679—SEABIRD AVOIDANCE GEAR CODES—Continued

VESSEL LOGBOOK	
CODE	SEABIRD AVOIDANCE GEAR OR METHOD.
7	*Strategic Offal Discharge:* Discharging fish, fish parts (i.e., offal) or spent bait for the purpose of distracting seabirds away from the main groundline while setting gear.
Additional Device Used	
8	*Night Fishing:* Setting hook–and–line gear during dark (night time hours).
	Line Shooter: A hydraulic device designed to deploy hook–and–line gear at a speed slightly faster than the vessel's speed during setting.
	Lining Tube: A device used to deploy hook–and–line gear through an underwater–setting device.
	Other (Describe)
9	No Deterrent Used Due to Weather. [See weather exceptions at § 679.24(e)(4)(i), (e)(4)(ii)(B), (e)(4)(iii)(B), (e)(4)(iv)(B), and (e)(4)(v).]
0	No Deterrent Used.

TABLE 20 TO PART 679—SEABIRD AVOIDANCE GEAR REQUIREMENTS FOR VESSELS, BASED ON AREA, GEAR, AND VESSEL TYPE

(See § 679.24(e) for complete seabird avoidance program requirements; see § 679.24(e)(1) for applicable fisheries.)

If you operate a vessel deploying hook–and–line gear, other than snap gear, in waters specified at § 679.24(e)(3), and your vessel is...	**then you must use this seabird avoidance gear in conjunction with requirements at § 679.24(e)...**
>26 ft to 55 ft LOA and without masts, poles, or rigging	minimum of one buoy bag line
>26 ft to 55 ft LOA and with masts, poles, or rigging	minimum of a single streamer line of a standard specified at § 679.24(e)(4)(ii)
>55 ft LOA	minimum of paired streamer lines of a standard specified at § 679.24(e)(4)(iii)

TABLE 20 TO PART 679—SEABIRD AVOIDANCE GEAR REQUIREMENTS FOR VESSELS, BASED ON AREA, GEAR, AND VESSEL TYPE—Continued

(See § 679.24(e) for complete seabird avoidance program requirements; see § 679.24(e)(1) for applicable fisheries.)

If you operate a vessel deploying hook–and–line gear and use snap gear in waters specified at § 679.24(e)(3), and your vessel is...	**then you must use this seabird avoidance gear in conjunction with requirements at § 679.24(e)...**
>26 ft to 55 ft LOA and without masts, poles, or rigging	minimum of one buoy bag line
>26 ft to 55 ft and with masts, poles, or rigging	minimum of a single streamer line of a standard specified at § 679.24(e)(4)(iv)
>55 ft LOA	minimum of a single streamer line of a standard specified at § 679.24(e)(4)(iv)
If you operate any of the following hook–and–line vessels...	**then...**
< 32 ft in the State waters of IPHC Area 4E	you are exempt from seabird avoidance measures.
in NMFS Reporting Area 649 (Prince William Sound)	
in State waters of Cook Inlet	

TABLE 20 TO PART 679—SEABIRD AVOIDANCE GEAR REQUIREMENTS FOR VESSELS, BASED ON AREA, GEAR, AND VESSEL TYPE—Continued

(See § 679.24(e) for complete seabird avoidance program requirements; see § 679.24(e)(1) for applicable fisheries.)

in NMFS Reporting Area 659 (Eastern GOA Regulatory Area, Southeast Inside District), but not including waters in the areas south of a straight line at 56°17.25 N. lat. between Point Harris and Port Armstrong in Chatham Strait, State statistical areas 325431 and 325401, and west of a straight line at 136°21.17 E. long. from Point Wimbledon extending south through the Inian Islands to Point Lavinia	

TABLE 20 TO PART 679—SEABIRD AVOIDANCE GEAR REQUIREMENTS FOR VESSELS, BASED ON AREA, GEAR, AND VESSEL TYPE—Continued

(See § 679.24(e) for complete seabird avoidance program requirements; see § 679.24(e)(1) for applicable fisheries.)

≤ 55 ft in IPHC Area 4E but not including waters south of 60°00.00 N. lat. and west of 160°00.00 W. long.	

[FR Doc. E9–974 Filed 1–15–09; 8:45 am]

BILLING CODE 3510–22–S

Notices

Federal Register
Vol. 74, No. 11
Friday, January 16, 2009

This section of the FEDERAL REGISTER contains documents other than rules or proposed rules that are applicable to the public. Notices of hearings and investigations, committee meetings, agency decisions and rulings, delegations of authority, filing of petitions and applications and agency statements of organization and functions are examples of documents appearing in this section.

DEPARTMENT OF AGRICULTURE

Forest Service

White River National Forest, Eagle/Holy Cross Ranger District, Eagle County, CO; Edwards Inholding Easement Proposal

AGENCY: Forest Service, USDA.

ACTION: Notice of Intent to prepare an Environmental Impact Statement.

SUMMARY: The USDA Forest Service will prepare an Environmental Impact Statement (EIS) to disclose the anticipated environmental effects of a proposal to approve a permanent easement across National Forest System (NFS) lands for access to a 680-acre private inholding. The private land is entirely surrounded by NFS lands managed by the White River National Forest (WRNF). The proposed easement would provide year-round motorized access to the private inholding, enabling the owner ''reasonable use and enjoyment'' of the parcel as required by the Alaska National Interest Lands Conservation Act (ANILCA) of 1980.

DATES: Comments concerning the scope of the analysis must be received by February 19, 2009. The draft EIS is expected to be released in summer 2009 and the final EIS is expected in early 2010.

ADDRESSES: Send written comments to Brian Lloyd, District Ranger, Holy Cross Ranger District, P.O. Box 190, Minturn, CO 81645. Comments may also be sent via e-mail to *wrnf_scoping_comments@fs.fed.us*, or via facsimile to (970) 827–9343.

Comments received in response to this solicitation, including names and addresses of those who comment, will be part of the public record for this proposed action. Comments submitted anonymously will be accepted and considered; however, anonymous comments will not provide the respondent with standing to appeal the subsequent decision.

FOR FURTHER INFORMATION CONTACT: Brian Lloyd, *wrnf_scoping_comments@fs.fed.us*. Individuals who use telecommunication devices for the deaf (TDD) may call the Federal Information Relay Service (FIRS) at 1–800–877–8339 between 8 a.m. and 8 p.m., Eastern Time, Monday through Friday.

SUPPLEMENTARY INFORMATION: The property is located approximately 1.25 miles north of the I–70 Edwards interchange and is currently accessible in the summer months via Forest System Road (FSR) 774 and FSR 780. A 0.8-mile segment of FSR 780 traverses the southeastern leg of the private land inholding.

Purpose and Need for Action

The owner of the 680-acre inholding (the Proponent) plans to exercise their legal right to plat this private land into 19 individual lots (each 35 acres in size or greater) for development of a low-density, year-round residential community. As such, development of the inholding into a viable residential community requires year-round, vehicular access across NFS lands. Per ANILCA, the WRNF is obligated to ''* * * provide such access to nonfederally owned land within the boundaries of the National Forest System * * * to secure the owner reasonable use and enjoyment thereof * * *'' (16 U.S.C. 3210, Title I, § 1323). Therefore, the purpose and need of this proposal is rooted in the Forest Service's legal obligations under ANILCA.

Proposed Action

The Proposed Action would satisfy the Forest Service's minimum obligations to accommodate ''reasonable use and enjoyment'' under ANILCA. Issuance of a permanent easement would provide year-round motorized access to the private inholding, thus enabling the owner to develop it as legally entitled. The easement would be for reconstruction and use of two existing Forest System roads—FSR 774 and FSR 780. The total length of the easement on NFS lands (FSR 774 and FSR 780) would be approximately 2.6 miles (approximately 13,550 feet). The easement would include:

- 1.1 miles on FSR 774 (beginning at the Forest Service gate at the beginning of FSR 774 and would be followed until its intersection with FSR 780),
- 1.5 miles on FSR 780 (until it intersects the lower southeastern leg of the inholding).

FSR 774 and FSR 780 would be placed within a permanent easement and paved/maintained for homeowners' year-round use; the public would continue to have access to these roads consistent with the current seasonal closures.

This alignment would provide access to the southeastern portion of the inholding. Conceptually, an additional 5.5 miles of private road would be constructed throughout the eastern and northern portions of the private inholding to accommodate access to each of the 19 lots. Road construction within the inholding is not within the jurisdiction of the Forest Service.

Responsible Official

The Responsible Official is the WRNF Supervisor. The Responsible Official will document the decision and reasons for the decision in a Record of Decision. That decision will be subject to appeal under 36 CFR part 215 or part 251.

Nature of Decision To Be Made

Based on the analysis that will be documented in the forthcoming EIS, the Responsible Official will decide whether or not to implement, in whole or in part, the Proposed Action or another alternative developed by the Forest Service.

Preliminary Issues

As indicated in the 2002 WRNF Land and Resource Management Plan (Forest Plan), NFS lands in the vicinity of the private inholding are within two Management Areas (MA): 5.41—Deer and Elk Winter Range, and 8.32—Designated Utility Corridors. Per MA 5.41, deer and elk winter ranges are managed to provide adequate amounts of quality forage, cover and solitude for deer, elk, and other species. Consistent with management direction in MA 5.41, human activities are managed so that deer and elk can effectively use NFS lands in the area.

Due to the existance of NFS lands managed in MA 5.41, motorized travel, including over-the-snow vehicles, on FSR 774 and FSR 780 is restricted during winter and spring. Granting a

year-round easement could result in an inconsistency with Forest Plan standards for MA 5.41. In order to approve road reconstruction and year-round access to the inholding across NFS lands, an amendment to the Forest Plan would be necessary. This amendment would be specific to standards included in MA 5.41 related to biodiversity and infrastructure.

Permits or Licenses Required

- An Eagle County grading permit(s) would be required for road construction on NFS and private lands.
- Building construction permits would be required for individual buildings on each lot.

Scoping Process

Publication of a Notice of Intent (NOI) in the **Federal Register** begins the planning process under provisions of the National Environmental Policy Act. Comments will be accepted during the 45-day scoping period as described in this NOI. Comments will be reviewed and issues identified. Issues that cannot be resolved by mitigation or minor changes to the proposed action may generate alternatives to the proposed action. This process is driven by comments received from the public, other agencies, and internal Forest Service concerns. To assist in commenting, a scoping letter providing more detailed information on the project proposal (including a map) has been prepared and is available to interested parties. Contact Brian Lloyd, District Ranger, at the address listed in this NOI if you would like to receive a copy.

Comment Requested

This notice of intent initiates the scoping process that guides the development of the environmental impact statement. Comments that are site-specific in nature are most helpful to resource professionals when trying to narrow and address the public's issues and concerns.

Early Notice of Importance of Public Participation in Subsequent Environmental Review

A Draft Environmental Impact Statement will be prepared for comment. The comment period on the Draft Environment Impact Statement will be 45 days from the date the Environmental Protection Agency publishes the notice of availability in the **Federal Register**.

The Forest Service believes, at this early stage, it is important to give reviewers notice of several court rulings related to public participation in the environmental review process. First, reviewers of Draft Environmental Impact Statements must structure their participation in the environmental review of the proposal so that it is meaningful and alerts an agency to the reviewer's position and contentions. *Vermont Yankee Nuclear Power Corp.* v. NRDC, 435 U.S. 519, 553 (1978). Also, environmental objections that could be raised at the Draft Environmental Impact Statement stage but that are not raised until after completion of the Final Environmental Impact Statement may be waived or dismissed by the courts. *City of Angoon* v. *Hodel,* 803 F.2d 1016, 1022 (9th Cir. 1986) and *Wisconsin Heritages, Inc.* v. *Harris,* 490 F. Supp. 1334, 1338 (E.D. Wis. 1980). Because of these court rulings, it is very important that those interested in this proposed action participate by the close of the 45 day comment period so that substantive comments and objections are made available to the Forest Service at a time when it can meaningfully consider them and respond to them in the Final Environmental Impact Statement.

To assist the Forest Service in identifying and considering issues and concerns on the proposed action, comments on the Draft Environmental Impact Statement should be as specific as possible. It is also helpful if comments refer to specific pages or chapters of the draft statement. Comments may also address the adequacy of the Draft Environmental Impact Statement or the merits of the alternatives formulated and discussed in the statement. Reviewers may wish to refer to the Council on Environmental Quality Regulations for implementing the procedural provisions of the National Environmental Policy Act at 40 CFR 1503.3 in addressing these points.

It is important that reviewers provide their comments at such times and in such manner that they are useful to the agency's preparation of the Environmental Impact Statement. Therefore, comments should be provided prior to the close of the comment period and should clearly articulate the reviewer's concerns and contentions. The submission of timely and specific comments can affect a reviewer's ability to participate in subsequent administrative appeal or judicial review.

Dated: January 6, 2009.

Mary Morgan,

White River National Forest Supervisor.

[FR Doc. E9–965 Filed 1–15–09; 8:45 am]

BILLING CODE 3410–11–P

DEPARTMENT OF AGRICULTURE

Forest Service

National Urban and Community Forestry Advisory Council

AGENCY: Forest Service, USDA.

ACTION: Notice of meeting.

SUMMARY: The National Urban and Community Forestry Advisory Council will meet in Washington DC, February 10–12, 2009. The purpose of the meeting is to discuss emerging issues in urban and community forestry and hear public input related to urban and community forestry.

DATES: The meeting will be held on February 10–11, 2009, 9 a.m. to 5 p.m. and February 12, 2009, 9 a.m. to 12 noon.

ADDRESSES: The meeting will be held at the Holiday Inn Capital, 550 C Street, SW., Washington, DC 20024, phone: 202–479–4000. Written comments concerning this meeting should be addressed to Nancy Stremple, Executive Staff to National Urban and Community Forestry Advisory Council, 201 14th St. SW., Yates Building (1 Central) MS–1151, Washington, DC 20250–1151. Comments may also be sent via e-mail to *nstremple@fs.fed.us,* or via facsimile to 202–690–5792.

All comments, including names and addresses when provided, are placed in the record and are available for public inspection and copying. The public may inspect comments received at 201 14th St., SW., Yates Building (1 Central) MS–1151, Washington, DC 20250–1151. Visitors are encouraged to call ahead to 202–205–1054 to facilitate entry into the building.

FOR FURTHER INFORMATION CONTACT: Nancy Stremple, Executive Staff or Robert Prather, Staff Assistant to National Urban and Community Forestry Advisory Council, 201 14th St., SW., Yates Building (1 Central) MS–1151, Washington, DC 20250–1151, phone 202–205–1054.

Individuals who use telecommunication devices for the deaf (TDD) may call the Federal Information Relay Service (FIRS) at 1–800–877–8339 between 8 a.m. and 8 p.m., Eastern Standard Time, Monday through Friday.

SUPPLEMENTARY INFORMATION: The meeting is open to the public. Council discussion is limited to Forest Service staff and Council members; however, persons who wish to bring urban and community forestry matters to the attention of the Council may file written statements with the Council staff (201 14th St., SW., Yates Building (1 Central)

MS–1151, Washington, DC 20250–1151, e-mail: *nstremple@fs.fed.us*) before or after the meeting. Public input sessions will be provided at the meeting. Public comments will be compiled and provided to the Secretary of Agriculture along with the Council's recommendations.

Dated: January 8, 2009.

Robin L. Thompson,

Associate Deputy Chief, State and Private Forestry.

[FR Doc. E9–954 Filed 1–15–09; 8:45 am]

BILLING CODE 3410–11–P

DEPARTMENT OF AGRICULTURE

Forest Service

Opal Creek Scenic Recreation Area (SRA) Advisory Council

AGENCY: Forest Service, USDA Forest Service

ACTION: Notice of Meeting.

SUMMARY: Opal Creek Scenic Recreation Area Advisory Council meetings will convene in Stayton, Oregon on Wednesday, February 11, 2009. These meetings are scheduled to begin at 6:30 p.m., and will conclude at approximately 8:30 p.m. Meetings will be held in the South Room of the Stayton Community Center located on 400 West Virginia Street in Stayton, Oregon.

The Opal Creek Wilderness and Opal Creek Scenic Recreation Area Act of 1996 (Opal Creek Act) (Pub. L. 104–208) directed the Secretary of Agriculture to establish the Opal Creek Scenic Recreation Area Advisory Council. The Advisory Council is comprised of thirteen members representing state, county and city governments, and representatives of various organizations, which include mining industry, environmental organizations, inholders in Opal Creek Scenic Recreation Area, economic development, Indian tribes, adjacent landowners and recreation interests. The council provides advice to the Secretary of Agriculture on preparation of a comprehensive Opal Creek Management Plan for the SRA, and consults on a periodic and regular basis on the management of the area. Tentative agenda items include: Forest Service updates and future projects.

A direct public comment period is tentatively scheduled to begin at 8 p.m. Time allotted for individual presentations will be limited to 3 minutes. Written comments are encouraged, particularly if the material cannot be presented within the time limits of the comment period. Written comments may be submitted prior to scheduled meetings by sending them to Designated Federal Official Paul Matter at the address given below.

FOR FURTHER INFORMATION CONTACT: For more information regarding this meeting, contact Designated Federal Official Paul Matter; Willamette National Forest, Detroit Ranger District, HC 73 Box 320, Mill City, OR 97360; (503) 854–3366.

Dated: January 9, 2009.

Dallas J. Emch,

Forest Supervisor.

[FR Doc. E9–876 Filed 1–15–09; 8:45 am]

BILLING CODE 3410–11–M

COMMITTEE FOR PURCHASE FROM PEOPLE WHO ARE BLIND OR SEVERELY DISABLED

Procurement List; Proposed Additions and Deletions

AGENCY: Committee for Purchase From People Who Are Blind or Severely Disabled.

ACTION: Proposed Additions to and Deletions from Procurement List.

SUMMARY: The Committee is proposing to add to the Procurement List services to be furnished by nonprofit agencies employing persons who are blind or have other severe disabilities, and to delete products previously furnished by such agencies

Comments Must Be Received on or Before: 2/15/2009.

ADDRESSES: Committee for Purchase From People Who Are Blind or Severely Disabled, Jefferson Plaza 2, Suite 10800, 1421 Jefferson Davis Highway, Arlington, Virginia 22202–3259.

FOR FURTHER INFORMATION OR TO SUBMIT COMMENTS CONTACT: Barry S. Lineback, Telephone: (703) 603–7740, Fax: (703) 603–0655, or e-mail *CMTEFedReg@AbilityOne.gov*.

SUPPLEMENTARY INFORMATION: This notice is published pursuant to 41 U.S.C 47(a)(2) and 41 CFR 51–2.3. Its purpose is to provide interested persons an opportunity to submit comments on the proposed actions.

Additions

If the Committee approves the proposed additions, the entities of the Federal Government identified in this notice for each product or service will be required to procure the services listed below from nonprofit agencies employing persons who are blind or have other severe disabilities.

Regulatory Flexibility Act Certification

I certify that the following action will not have a significant impact on a substantial number of small entities. The major factors considered for this certification were:

1. If approved, the action will not result in any additional reporting, recordkeeping or other compliance requirements for small entities other than the small organizations that will furnish the services to the Government.

2. If approved, the action will result in authorizing small entities to furnish the services to the Government.

3. There are no known regulatory alternatives which would accomplish the objectives of the Javits-Wagner-O'Day Act (41 U.S.C. 46–48c) in connection with the services proposed for addition to the Procurement List.

Comments on this certification are invited. Commenters should identify the statement(s) underlying the certification on which they are providing additional information.

End of Certification

The following services are proposed for addition to the Procurement List for production by the nonprofit agencies listed:

Services

Service Type/Location:

Base Information Transfer Center, BITC, Multiple Locations, AF Air Combat Command

Contracting Activity: DEPT OF THE AIR FORCE, FA4890 ACC CONS LGC.
Prime NPA: The Arc of the Virginia Peninsula, Inc., Hampton, VA.

50 Vandenberg, Barksdale AFB, LA.
NPA: The Arc of Caddo-Bossier, Shreveport, LA.

5465 East Nuggat Street, Davis Monthan AFB, AZ.
NPA: Catholic Community Services of Southern Arizona, Tucson, AZ.

426 3rd Street, Dyess AFB, TX.
NPA: Training, Rehabilitation, & Development Institute, Inc., San Antonio, TX.

1234 Kenney Road, Ellsworth AFB, SD.
NPA: BH Services, Inc., Ellsworth AFB, SD.

330 Bomber Blvd., Minot AFB, ND.
NPA: MVW Services, Inc., Minot, ND.

390 Gunfighter Ave., Mountain Home AFB, ID.
NPA: Western Idaho Training Company, Inc., Caldwell, ID.

4250 Friffis Ave., Nellis AFB, NV.
NPA: Opportunity Village Association for Retarded Citizens, Las Vegas, NV.

1815 Wright Brothers Ave., Seymour Johnson AFB, NC.
NPA: The Arc of the Virginia Peninsula, Inc., Hampton, VA.

740 Arnold Ave, 1C, Whiteman AFB, NM.
NPA: The Arc of the Virginia Peninsula, Inc.,

Hampton, VA.
504 Shaw Drive, Shaw AFB, SC.
NPA: Genesis Development, Jefferson, IA.

Custodial Service

Southside Locust Pt, Baltimore, MD—CBP, 2001 East McComas St., Baltimore, MD.
NPA: The Arc of Baltimore, Inc., Baltimore, MD.
Contracting Activity: BUREAU OF CUSTOMS AND BORDER PROTECTION, OFFICE OF PROCUREMENT.

Deletions

Regulatory Flexibility Act Certification

I certify that the following action will not have a significant impact on a substantial number of small entities. The major factors considered for this certification were:

1. If approved, the action will not result in additional reporting, recordkeeping or other compliance requirements for small entities.
2. If approved, the action may result in authorizing small entities to furnish the products to the Government.
3. There are no known regulatory alternatives which would accomplish the objectives of the Javits-Wagner-O'Day Act (41 U.S.C. 46–48c) in connection with the products proposed for deletion from the Procurement List.

End of Certification

The following products are proposed for deletion from the Procurement List:

Products

Surgical Pack, Disposable

NSN: 6515–00–103–6659—Surgical Pack, Disposable.
NPA: In-Sight, Warwick, RI.
Contracting Activity: Veterans Administration, NAC, HINES, IL.

Flashlight

NSN: 6230–01–513–3266—Flashlight, Aluminum, 2D, Silver.
NPA: Central Association for the Blind & Visually Impaired, Utica, NY.
Contracting Activity: GSA/FSS OFC SUP CTR—PAPER PRODUCTS, NEW YORK, NY.

Pad, Folio

NSN: 7510–01–484–4591—Pad, Folio.
NSN: 7510–01–484–4593—Pad, Folio.
NSN: 7510–01–484–4592—Pad, Folio.
NPA: Winston-Salem Industries for the Blind, Winston-Salem, NC.
Contracting Activity: GSA/FSS OFC SUP CTR—PAPER PRODUCTS, NEW YORK, NY.

Cleaner, Water Soluble

NSN: 7930–01–367–2966—Cleaner, Water Soluble.
NPA: Assoc f/t Blind &Visually Impaired & Goodwill Ind. of Greater Rochester, Rochester, NY.
Contracting Activity: GSA/FAS SOUTHWEST SUPPLY CENTER (QSDAC), FORT WORTH, TX.

Barry S. Lineback,

Acting Director, Program Operations.

[FR Doc. E9–898 Filed 1–15–09; 8:45 am]

BILLING CODE 6353–01–P

COMMISSION ON CIVIL RIGHTS

Agenda and Notice of Public Meeting of the Arkansas Advisory Committee

Notice is hereby given, pursuant to the provisions of the rules and regulations of the U.S. Commission on Civil Rights (Commission), and the Federal Advisory Committee Act (FACA), that a meeting of the Arkansas Advisory Committee to the Commission will convene on Wednesday, February 11, 2009 at 1:30 p.m. and adjourn at approximately 3:30 p.m. at the University of Arkansas at Little Rock, William H. Bowen School of Law. The purpose of the meeting is to conduct long range planning for future activities in 2009–10.

Members of the public are entitled to submit written comments. The comments must be received in the regional office by February 4, 2009. The address is U.S. Commission on Civil Rights, 400 State Avenue, Suite 908, Kansas City, Kansas 66101. Persons wishing to e-mail their comments, or to present their comments verbally at the meeting, or who desire additional information should contact Farella E. Robinson, Regional Director, Central Regional Office, at (913) 551–1400 or by e-mail to *frobinson@usccr.gov.*

Hearing-impaired persons who will attend the meeting and require the services of a sign language interpreter should contact the Regional Office at least ten (10) working days before the scheduled date of the meeting.

Records generated by this meeting may be inspected and reproduced at the Central Regional Office, as they become available, both before and after the meeting. Persons interested in the work of this advisory committee are advised to go to the Commission's Web site, *http://www.usccr.gov,* or to contact the Central Regional Office at the above e-mail or street address.

The meeting will be conducted pursuant to the provisions of the rules and regulations of the Commission and FACA.

Dated in Washington, DC, January 12, 2009.

Christopher Byrnes,

Chief, Regional Programs Coordination Unit.

[FR Doc. E9–766 Filed 1–15–09; 8:45 am]

BILLING CODE 6335–01–P

COMMISSION ON CIVIL RIGHTS

Agenda and Notice of Public Meeting of the Kansas Advisory Committee

Notice is hereby given, pursuant to the provisions of the rules and regulations of the U.S. Commission on Civil Rights (Commission), and the Federal Advisory Committee Act (FACA), that a public briefing meeting of the Kansas Advisory Committee to the Commission will convene on Thursday, February 26, 2009 at 9 a.m. and adjourn at approximately 4 p.m. at the Dillon House located on the grounds of the Kansas State Capitol, 404 Southwest North 9th Street, Topeka, KS 66612. The purpose of the meeting is to conduct a public briefing meeting to receive information on the ''*Civil Rights Implications of Kansas Caucus Process Related Voting Rights Issues.*'' Information will also be collected on ''*Enforcement of Employment Civil Rights Laws in Kansas.*''

Members of the public are entitled to submit written comments. The comments must be received in the regional office by February 16, 2009. The address is U.S. Commission on Civil Rights, 400 State Avenue, Suite 908, Kansas City, Kansas 66101. Persons wishing to e-mail their comments, or to present their comments verbally at the meeting, or who desire additional information should contact Farella E. Robinson, Regional Director, Central Regional Office, at (913) 551–1400 or by e-mail to *frobinson@usccr.gov.*

Hearing-impaired persons who will attend the meeting and require the services of a sign language interpreter should contact the Regional Office at least ten (10) working days before the scheduled date of the meeting.

Records generated by this meeting may be inspected and reproduced at the Central Regional Office, as they become available, both before and after the meeting. Persons interested in the work of this advisory committee are advised to go to the Commission's Web site, *http://www.usccr.gov*, or to contact the Central Regional Office at the above e-mail or street address.

The meeting will be conducted pursuant to the provisions of the rules and regulations of the Commission and FACA.

Dated in Washington, DC, January 12, 2009.

Christopher Byrnes,

Chief, Regional Programs Coordination Unit.

[FR Doc. E9–765 Filed 1–15–09; 8:45 am]

BILLING CODE 6335–01–P

DEPARTMENT OF COMMERCE

National Oceanic and Atmospheric Administration

DEPARTMENT OF THE INTERIOR

Fish and Wildlife Service

RIN 0648–XI12

Endangered and Threatened Species; Recovery Plans; Recovery Plan for the Northwest Atlantic Population of the Loggerhead Sea Turtle

AGENCIES: National Marine Fisheries Service (NMFS), National Oceanic and Atmospheric Administration (NOAA), Commerce; Fish and Wildlife Service (USFWS), Interior.

ACTION: Notice of availability.

SUMMARY: We, NMFS and USFWS, announce the availability of the revised Recovery Plan for the Northwest Atlantic Population of the Loggerhead Sea Turtle (*Caretta caretta*). The revised recovery plan includes specific recovery objectives and criteria to be met in order to delist this species under the Endangered Species Act of 1973, as amended (Act).

ADDRESSES: The Recovery Plan for the Northwest Atlantic Population of the Loggerhead Sea Turtle is available on the Internet at *http://www.nmfs.noaa.gov/pr/recovery/plans.htm#turtles* or *http://www.fws.gov/northflorida*. Copies also may be obtained by contacting NMFS Office of Protected Resources, 1315 East-West Highway, Room 13657, Silver Spring, MD 20910 (telephone 301–713–1401) or USFWS North Florida Field Office, 7915 Baymeadows Way, Suite 200, Jacksonville, FL 32256 (telephone 904–731–3336).

FOR FURTHER INFORMATION CONTACT: Barbara Schroeder (ph. 301–713–1401, fax 301–713–0376, e-mail *barbara.schroeder@noaa.gov*) or Sandy MacPherson (ph. 904–731–3328, fax 904–731–3045, e-mail *sandy__macpherson@fws.gov*).

SUPPLEMENTARY INFORMATION: The Endangered Species Act of 1973 (15 U.S.C. 1531 *et seq.*) requires that NMFS and USFWS develop and implement recovery plans for the conservation and survival of threatened and endangered species under their jurisdiction, unless it is determined that such plans would not promote the conservation of the species. Section 4(f) of the Act requires us to provide a public notice and an opportunity for public review and comment during recovery plan development. We made the draft revision of the Recovery Plan for the Northwest Atlantic Population of the Loggerhead Sea Turtle available for public comment from May 30, 2008, through July 29, 2008 (73 FR 31066, May 30, 2008). We considered information we received during the public comment period and information from peer reviewers in our preparation of this final revised recovery plan.

The plan discusses the natural history, current status, and the known and potential threats to the loggerhead turtle in the Northwest Atlantic. The plan lays out a recovery strategy to address the potential threats based on the best available science and includes recovery goals and criteria. The plan is not a regulatory action, but presents guidance for use by agencies and interested parties to assist in the recovery of loggerhead turtles. The plan identifies substantive actions needed to achieve recovery by addressing the threats to the species. Recovery of loggerhead turtles in the Northwest Atlantic is a long-term effort and will require cooperation and coordination of Federal, state, and local government agencies, and the community, as well as international cooperation.

Dated: January 9, 2009.

James H. Lecky,

Director, Office of Protected Resources, National Marine Fisheries Service.

Dated: January 6, 2009.

Jeffrey M. Flemming,

Acting Regional Director, Southeast Region, Fish and Wildlife Service.

[FR Doc. E9–982 Filed 1–15–09; 8:45 am]

BILLING CODES 3510–22–S, 4310–55–S

DEPARTMENT OF COMMERCE

National Oceanic and Atmospheric Administration

RIN 0648–XL89

Incidental Takes of Marine Mammals During Specified Activities; Marine Geophysical Survey in Southeast Asia, March–July 2009

AGENCY: National Marine Fisheries Service (NMFS), National Oceanic and Atmospheric Administration (NOAA), Commerce.

ACTION: Notice; proposed incidental take authorization; extension of comment period.

SUMMARY: On December 22, 2008, the NMFS announced notice of its proposed issuance of an Incidental Harassment Authorization (IHA) to Lamont-Doherty Earth Observatory (L-DEO), a part of Columbia University, to take small numbers of marine mammals, by harassment incidental to conducting a marine seismic survey in Southeast Asia during March-July 2009. Written comments were due by January 21, 2009. Under the unique circumstances of the timing of the publication of the **Federal Register** notice relative to several Federal holidays, NMFS has decided to extend the public comment period by 15 days, to February 5, 2009.

DATES: The public comment period for this action has been extended from January 21 to February 5, 2009. Written comments and information must be received no later than February 5, 2009.

ADDRESSES: Comments on the application should be addressed to P. Michael Payne, Chief, Permits, Conservation, and Education Division, Office of Protected Resources, National Marine Fisheries Service, 1315 East-West Highway, Room 13705, Silver Spring, MD 20910–3225. The mailbox address for providing email comments is *PR1.0648–XL89@noaa.gov*. Comments sent via email, including all attachments, must not exceed 10–megabyte file size.

FOR FURTHER INFORMATION CONTACT: Howard Goldstein, Office of Protected Resources, NMFS, 301–713–2289.

SUPPLEMENTARY INFORMATION: On December 22, 2008 (73 FR 78294), the NMFS announced notice of its proposed issuance of an Incidental harassment Authorization (IHA) to L-DEO, a part of Columbia University, to take small numbers of marine mammals by harassment incidental to conducting a marine seismic survey in Southeast Asia during March-July 2009. Under the unique circumstances of the timing of the publication of the **Federal Register** notice relative to several Federal holidays, NMFS had decided to extend the public comment period by 15 days, to February 5, 2009. The **Federal Register** notice published three days before the Christmas holiday, which fell on Thursday, December 25, 2008. The following day, Friday, December, 26, 2008 was declared a Federal holiday for executive branch departments and agencies. New Year's Day, a Federal holiday, was the following Thursday, January 1, 2009. In recognition of the fact that the timing of these three holidays led many workers to be away for much of the two-week period and some non-government organizations closed their offices during that period, NMFS' public comment period for this proposed action is hereby extended to February 5, 2009. NMFS is also aware that the proposed action is for a new geographical area rather than a renewal of a prior action, where the associated

documents are lengthy and would likely not be familiar to many interested parties. Finally, NMFS does not anticipate that the comment period extension will delay its decision of whether to issue an IHA.

Background information concerning the proposed IHA can be found in the **Federal Register** notice and is not repeated here. For additional information about the IHA application and associated EA, please visit the website at: *http://www.nmfs.noaa.gov/pr/permits/incidental.htm*

Dated: January 12, 2009.

James H. Lecky,

Director, Office of Protected Resources, National Marine Fisheries Service.

[FR Doc. E9–981 Filed 1–15–09; 8:45 am]

BILLING CODE 3510–22–S

DEPARTMENT OF COMMERCE

National Oceanic and Atmospheric Administration

RIN 0648–XM73

National Marine Fisheries Service; Public Meeting

AGENCY: National Marine Fisheries Service (NMFS), National Oceanic and Atmospheric Administration (NOAA), Commerce.

ACTION: Notice of a public workshop.

SUMMARY: NMFS will hold a workshop for participants that are required to submit an Economic Data Report for the Bering Sea and Aleutian Islands Crab Rationalization Program.

DATES: The workshop will be held on Thursday, January 22, 2009, from 1:30 p.m. to 5 p.m. Pacific Standard Time.

ADDRESSES: The workshop will be held at the Pacific Seafood Processors Association office, 1900 W. Emerson Place, t205, Seattle, WA 98119.

FOR FURTHER INFORMATION CONTACT: Brian Garber-Yonts; (206) 526-6301 or *brian.garber-yonts@noaa.gov*.

SUPPLEMENTARY INFORMATION: The Bering Sea and Aleutian Islands (BSAI) Crab Rationalization Program requires any owner or leaseholder of a vessel or processing plant that harvested or processed crab in certain BSAI fisheries to submit an Economic Data Report (EDR) for the previous calendar year. NMFS staff will hold a workshop with BSAI crab industry members to review current crab EDR data documentation and data quality findings. Workshop participants will also discuss the development of best practices guidelines for completing crab EDR forms and discuss possible revisions to the current crab EDR forms. For further information on the Crab Rationalization Program, please visit the NMFS Alaska Region website at *http://www.alaskafisheries.noaa.gov*.

Special Accommodations

This workshop is physically accessible to people with disabilities. Requests for special accommodations should be directed to Brian Garber-Yonts (see **FOR FURTHER INFORMATION CONTACT**) at least 5 working days before the workshop date.

Dated: January 13, 2009.

Tracey L. Thompson,

Acting Director, Office of Sustainable Fisheries, National Marine Fisheries Service.

[FR Doc. E9–921 Filed 1–15–09; 8:45 am]

BILLING CODE 3510–22–S

DEPARTMENT OF COMMERCE

National Oceanic and Atmospheric Administration

RIN 0648–XM70

North Pacific Fishery Management Council; Public Meetings

AGENCY: National Marine Fisheries Service (NMFS), National Oceanic and Atmospheric Administration (NOAA), Commerce.

ACTION: Notice of public meetings.

SUMMARY: The North Pacific Fishery Management Council (Council) and its advisory committees will hold public meetings.

DATES: The meetings will be held Monday, February 2 through Tuesday, February 10, 2009. See **SUPPLEMENTARY INFORMATION** for specific dates and times.

ADDRESSES: The meetings will be held at the Renaissance Hotel, 515 Madison Street, Seattle, WA.

Council address: North Pacific Fishery Management Council, 605 W. 4th Avenue, Suite 306, Anchorage, AK 99501–2252.

FOR FURTHER INFORMATION CONTACT: David Witherell, Council staff, telephone: (907) 271–2809.

SUPPLEMENTARY INFORMATION: The Council will begin its plenary session at 8 a.m. on Wednesday, February 4 continuing through Tuesday, February 10, 2009. The Council's Advisory Panel (AP) will begin at 8 a.m., Monday, February 2 and continue through Friday, February 6. The Scientific and Statistical Committee (SSC) will begin at 8 a.m. on Monday, February 2 and continue through Wednesday, February 4, 2009. The Ecosystem Committee will meet Tuesday, February 3, from 4 p.m. to 6 p.m. The Enforcement Committee will meet Tuesday, February 3, from 1 p.m. to 4 p.m. in the. The Comprehensive Data Collection Committee may also meet this week at the hotel, time TBA. All meetings are open to the public, except executive sessions.

Council Plenary Session: The agenda for the Council's plenary session will include the following issues. The Council may take appropriate action on any of the issues identified.

1. Reports
   Executive Director's Report
   NMFS Management Report
   NMFS Enforcement Report
   Alaska Department of Fish & Game Report
   U.S. Coast Guard Report
   U.S. Fish & Wildlife Service Report
   International Pacific Halibut Commission Report
   Protected Species Report (update on schedule of Steller Sea Lion (SSL) draft Status Quo Biological Opinion (BiOp) and Environmental Impact Statement (EIS); Bering Sea and Aleutian Island (BSAI) Pacific cod split.
2. American Fisheries Act (AFA) Cooperative reports: Receive reports from BSAI Pollock cooperatives.
3. Arctic Fishery Management Plan (FMP): Final action to adopt FMP for the Arctic region.
4. Salmon Bycatch: Review Inter-Cooperative Agreement (ICA) incentive proposals and Bycatch Committee Report.
5. Amendment 80: Initial review of analysis for Amendment 80 Cooperative Formation.
6. BSAI Fixed Gear: Initial review of BSAI fixed gear parallel fisheries analysis.
7. Gulf of Alaska (GOA) Sideboards: Discussion paper on GOA Sideboards for AFA catcher vessels; Initial review of GOA Pacific cod sideboards for crab vessels.
8. BSAI Crab Issues: Initial review BSAI Crab Regional Delivery Relief; Receive Committee report; Receive proposed workplan and timeline for crab analysis/discussion papers for changes to the program, and action as necessary; Receive progress report on Crab Economic Data Report (EDR) surveys.
9. Marine Protection Act Nomination Process: Review NMFS letter and discuss next steps (T).
10. Halibut/Sablefish Issues: Review/Rescind previous action to remove inactive Individual Fishing Quota (IFQ) shares; Review halibut catch sharing plan discussion papers (SSC only): (i)

Maximum size limit analysis (ii) ADF&G charter halibut harvest projection methodology.

11. Miscellaneous Issues: Receive Committee report on comprehensive data collection; Review of Halibut Prohibited Species Catch (PSC) Discard Survival Exempted Fishing Permit (EFP); Review of halibut sorting EFP (T); Review discussion paper on BS bottom trawl sweeps; Review discussion paper on GOA Rockfish Program changes; Review revised discussion paper on AI Pacific cod processing sideboards (T).

12. Staff Tasking: Review Committees and tasking; Receive report on Alaska Native/Community Outreach.

13. Other Business.

The SSC agenda will include the following issues:

1. Arctic FMP
2. Salmon Bycatch
3. Amendment 80
4. BSAI Fixed gear
5. GOA Sideboards
6. BSAI Crab Issues
7. Halibut Catch Sharing plan
8. Committee report on Crab EDR surveys
9. Halibut PSC discard survival EFP
10. Halibut sorting EFP

Additionally, the SSC will hold a Science Workshop on the role of Stock Structure in management of commercial fisheries.

The Advisory Panel will address most of the same agenda issues as the Council, except for ι1 reports. The Agenda is subject to change, and the latest version will be posted at *http://www.fakr.noaa.gov/npfmc/*.

Special Accommodations

These meetings are physically accessible to people with disabilities. Requests for sign language interpretation or other auxiliary aids should be directed to Gail Bendixen at (907) 271–2809 at least 7 working days prior to the meeting date.

Dated: January 13, 2009.

Tracey L. Thompson,

Acting Director, Office of Sustainable Fisheries, National Marine Fisheries Service.

[FR Doc. E9–864 Filed 1–15–09; 8:45 am]

BILLING CODE 3510–22–S

DEPARTMENT OF DEFENSE

Office of the Secretary

[Docket ID: DoD–2008–OS–0091]

Submission for OMB Review; Comment Request

ACTION: Notice.

The Department of Defense has submitted to OMB for clearance, the following proposal for collection of information under the provisions of the Paperwork Reduction Act (44 U.S.C. Chapter 35).

DATES: Consideration will be given to all comments received by February 6, 2009.

Title, Form, and OMB Number: National Language Service Corps; DD Test Forms 2932, 2933, 2934 and 2935; OMB Number 0704–0449.

Type of Request: Extension.

Number of Respondents: 4,000.

Responses per Respondent: 1.75.

Annual Responses: 7,000.

Average Burden per Response: 18.86 minutes.

Annual Burden Hours: 2,200.

Needs and Uses: The information collection requirement is necessary to identify individuals with language and special skills who potentially qualify for employment or service opportunities in the public section during periods of national need or emergency.

Affected Public: Individuals or households.

Frequency: On occasion.

Respondent's Obligation: Voluntary.

OMB Desk Officer: Ms. Jasmeet Seehra

Written comments and recommendations on the proposed information collection should be sent to Ms. Seehra at the Office of Management and Budget, Desk Officer for DoD, Room 10236, New Executive Office Building, Washington, DC 20503.

You may also submit comments, identified by docket number and title, by the following method:

• *Federal eRulemaking Portal: http://www.regulations.gov.* Follow the instructions for submitting comments.

Instructions: All submissions received must include the agency name, docket number and title for this **Federal Register** document. The general policy for comments and other submissions from members of the public is to make these submissions available for public viewing on the Internet at *http://www.regulations.gov* as they are received without change, including any personal identifiers or contact information.

DoD Clearance Officer: Ms. Patricia Toppings.

Written requests for copies of the information collection proposal should be sent to Ms. Toppings at WHS/ESD/Information Management Division, 1777 North Kent Street, RPN, Suite 11000, Arlington, VA 22209–2133.

Dated: January 8, 2009.

Patricia L. Toppings,

OSD Federal Register, Liaison Officer, Department of Defense.

[FR Doc. E9–878 Filed 1–15–09; 8:45 am]

BILLING CODE 5001–06–P

DEPARTMENT OF DEFENSE

Office of the Secretary

Defense Science Board

AGENCY: Department of Defense.

ACTION: Notice of advisory committee meetings.

SUMMARY: The Defense Science Board will meet in closed session on February 4 and 5, 2009; at the Pentagon, Arlington, VA.

The mission of the Defense Science Board is to advise the Secretary of Defense and the Under Secretary of Defense for Acquisition, Technology & Logistics on scientific and technical matters as they affect the perceived needs of the Department of Defense. At this meeting, the Board will discuss interim finding and recommendations resulting from ongoing Task Force activities. The Board will also discuss plans for future consideration of scientific and technical aspects of specific strategies, tactics, and policies as they may affect the U.S. national defense posture and homeland security.

FOR FURTHER INFORMATION CONTACT: Ms. Debra Rose, Executive Officer, Defense Science Board, 3140 Defense Pentagon, Room 3B888A, Washington, DC 20301–3140, via e-mail at *debra.rose@osd.mil*, or via phone at (703) 571–0084.

SUPPLEMENTARY INFORMATION:

In accordance with section 10(d) of the Federal Advisory Committee Act, Public Law No. 92–463, as amended (5 U.S.C. App. 2) and 41 CFR 102–3.155, the Department of Defense has determined that these Defense Science Board Quarterly meetings will be closed to the public. Specifically, the Under Secretary of Defense (Acquisition, Technology and Logistics), with the coordination of the DoD Office of General Counsel, has determined in writing that all sessions of these meetings will be closed to the public because they will be concerned throughout with matters listed in 5 U.S.C. 552b(c)(1).

Interested persons may submit a written statement for consideration by the Defense Science Board. Individuals submitting a written statement must submit their statement to the Designated Federal Official at the address detailed above, at any point, however, if a

written statement is not received at least 10 calendar days prior to the meeting, which is the subject of this notice, then it may not be provided to or considered by the Defense Science Board. The Designated Federal Official will review all timely submissions with the Defense Science Board Chairperson, and ensure they are provided to members of the Defense Science Board before the meeting that is the subject of this notice.

Dated: January 12, 2009.

Patricia L. Toppings,

OSD Federal Register Liaison Officer, Department of Defense.

[FR Doc. E9–885 Filed 1–15–09; 8:45 am]

BILLING CODE 5001–06–P

DEPARTMENT OF DEFENSE

DEPARTMENT OF ENERGY

ENVIRONMENTAL PROTECTION AGENCY

NUCLEAR REGULATORY COMMISSION

[Docket No. CP08–6–002]

Multi-Agency Radiation Survey and Assessment of Materials and Equipment Manual

AGENCY: Department of Defense, Department of Energy, Environmental Protection Agency, and the Nuclear Regulatory Commission.

ACTION: Notice of availability.

SUMMARY: The Department of Defense (DoD), Department of Energy (DOE), U.S. Environmental Protection Agency (EPA), and the U.S. Nuclear Regulatory Commission (NRC) are announcing the availability of the final ''Multi-Agency Radiation Survey and Assessment of Materials and Equipment manual'' (MARSAME). MARSAME provides information on planning, conducting, evaluating, and documenting radiological surveys for demonstrating compliance with measurable action levels. The MARSAME manual is a multi-agency consensus document. The agencies previously have sought public comment in order to receive feedback from the widest range of interested parties and to ensure that all information relevant to developing the document was received. The agencies reviewed public comments received on the draft MARSAME as well as comments from a concurrent, independent, technical peer review. Suggested changes were incorporated, where appropriate, in response to those comments.

ADDRESSES: Copies of the draft MARSAME and all comments received may be examined or copied for a fee electronically in *http://www.regulations.gov*, or in hard copy at the HQ EPA Docket Public Reading Room, U.S. Environmental Protection Agency, Room 3334, Docket ID No. EPA–HQ–OAR–2006–0957, 1301 Constitution Ave., NW., Washington, DC 20460, and the NRC Public Document Room, 11555 Rockville Pike, Rockville, Maryland 20852–2747. The HQ EPA Docket Public Reading Room is open from 8:30 a.m. to 4:30 p.m., Monday through Friday, excluding legal holidays. The telephone number for the EPA HQ Docket Public Reading Room is (202) 566–1744. DOE, EPA, and NRC each have a publication number for MARSAME. They are: For DOE, DOE/HS–0004; for EPA, EPA 402–R–09–001; for NRC, NUREG–1575, Supp. 1. Copies of the final MARSAME may be purchased by requests in writing to: The Superintendent of Documents, U.S. Government Printing Office, P.O. Box 37082, Washington, DC 20402–9328. The document will be available through the Internet at: *http://www.epa.gov/radiation/marssim*.

FOR FURTHER INFORMATION CONTACT: Any of the following points of contact for each agency for technical information (see **ADDRESSES** section above for directions on obtaining a copy of the draft MARSAME): DoD: Steven Doremus, Phone: (757) 887–7745, U.S. Navy, NAVSEADET RASO, NWS, P.O. Drawer 260, Yorktown, VA 23691–0260; DOE: W. Alexander Williams, Phone: (301) 903–8149, U.S. Department of Energy (EM–23), 1000 Independence Avenue, SW., Washington, DC 20585; EPA: Kathryn Snead, Phone: (202) 343–9228, U.S. Environmental Protection Agency, Mail Stop 6608J, 1200 Pennsylvania Avenue, NW., Washington, DC 20460–1000; NRC: Robert A. Meck, Phone: (301) 251–7548, U.S. Nuclear Regulatory Commission, Mail Stop C3 C07M, Washington, DC 20555. Questions concerning the multi-agency document development project should be addressed to Kathryn Snead, Phone: (202) 343–9228, U.S. Environmental Protection Agency, Mail Stop 6608J, 1200 Pennsylvania Avenue, NW., Washington, DC 20460–1000.

SUPPLEMENTARY INFORMATION: MARSAME provides information on planning, conducting, evaluating, and documenting environmental radiological surveys for demonstrating compliance with measurable action levels applied to materials and equipment. MARSAME is a multi-agency consensus document and a supplement to the Multi-Agency Radiation Survey and Site Investigation Manual (MARSSIM).

MARSAME was developed collaboratively over the past six years by the technical staffs of the four Federal agencies having authority for control of radioactive materials: DoD, DOE, EPA, and NRC. For a time, staff from the Department of Homeland Security participated in the development of MARSAME. Contractors to the DOE, EPA, and NRC, and members of the public have been present during the open meetings of the MARSAME workgroup. MARSAME's objective is to describe standardized and consistent approaches for surveys, which provide a high degree of assurance that established action levels can be measured and an appropriate disposition of materials or equipment can be technically defended. The techniques, methodologies, and philosophies that form the bases of this manual were developed to be consistent with current Federal limits, guidelines, and procedures.

MARSAME benefited from extensive internal, public, and technical peer reviews. In addition to written comments, the work group provided the public with the opportunity to comment during the open meetings. The document also received formal technical peer review under the auspices of the EPA Science Advisory Board (SAB). The results of the peer review and the responses to comments by the EPA are publicly available for examination and may be copied for a fee (see **ADDRESSES** section above for directions). In its findings, the SAB stated that, ''The MARSAME manual impresses the Panel as an excellent technical document for guiding a materials and equipment survey.'' The responses to the technical review comments by the SAB may be viewed at the following World-Wide-Web site: *http://yosemite.epa.gov/sab/sabproduct.nsf/5520FF23A405DCEB8525749E00737EEF/$File/EPA-SAB-08-010+Response+09-22-2008.pdf*.

The author agencies solicit comments arising from review and use of the final MARSAME. Comments will be reviewed periodically by the author agencies, resolved as appropriate, and incorporated into future revisions of the MARSAME. Members of the public are invited to submit written comments to the Chief, Rules and Directives Branch, Division of Administrative Services, U.S. Nuclear Regulatory Commission, Washington, DC 20555–0001. Copies of all comments received by one agency will be periodically copied and sent to the others. Revised pages resulting from the resolution of comments will be

available on the Internet at: *http://www.epa.gov/radiation/marssim*. This EPA Web site is also accessible by links from the NRC home page at: *http://www.nrc.gov*; and the DOE home page at: *http://www.doe.gov*.

For the Department of Defense, dated this 16th day of December 2008.

Alex Beehler,

Assistant Deputy Under Secretary of Defense, (Environment, Safety and Occupational Health).

For the U.S. Department of Energy, dated this 18th day of December 2008.

Andrew C. Lawrence,

Director, Office of Nuclear Safety, Quality Assurance and Environment, Office of Health, Safety and Security.

For the U.S. Environmental Protection Agency, dated this 15th day of December 2008.

Elizabeth Cotsworth,

Director, Office of Radiation and Indoor Air.

For the U.S. Nuclear Regulatory Commission, dated this 9th day of January 2009.

James E. Lyons,

Deputy Director, Office of Nuclear Regulatory Research.

[FR Doc. E9–975 Filed 1–15–09; 8:45 am]

BILLING CODE 7590–01–P

DEPARTMENT OF DEFENSE

Office of the Secretary

Renewal of Department of Defense Federal Advisory Committees

AGENCY: Department of Defense.

ACTION: Renewal of federal advisory committee.

SUMMARY: Under the provisions of the Federal Advisory Committee Act of 1972 (5 U.S.C. Appendix, as amended), the Government in the Sunshine Act of 1976 (5 U.S.C. 552b, as amended), and 41 CFR 102–3.65, the Department of Defense gives notice that it is renewing the charter for the Transformation Advisory Group (hereafter referred to as the Group).

The Group is a discretionary federal advisory committee established to provide the Secretary of Defense, through the Chairman of the Joint Chiefs of Staff and the Commander, U.S. Joint Forces Command, independent advice and recommendations on strategic, scientific technical, intelligence and policy-related issues to the Nation's joint enterprise, and U.S. Joint Forces Command, with emphasis on how these issues relate to the shaping of the command's efforts today and in the future.

The Group shall be composed of no more than twenty four members who are recognized experts and leaders in their fields. These areas of expertise include, but are not limited to, innovation, development, strategic communications, logistics, technologies, business practices, military, government, education, training, intelligence and appropriations. The Secretary of Defense shall appoint group members, and their appointments will be renewed on an annual basis.

Group Members appointed by the Secretary of Defense, who are not full-time or permanent part-time federal employees, are appointed as experts and consultants under the authority of 5 U.S.C. 3109, and shall serve as Special Government employees. Pursuant to 10 U.S.C. 1114(a)(3), the members shall serve with the exception of travel and per diem for official travel without compensation. The Chairperson of the Group shall be designated by the Commander, U.S. Joint Forces Command, on behalf of the Secretary of Defense.

The Group is authorized to establish Subcommittees, as necessary and consistent with its mission, and these Subcommittees shall operate under the provisions of the Federal Advisory Committee Act, the Government in the Sunshine Act of 1976, and other appropriate federal regulations.

Such Subcommittees shall not work independently of the chartered Group, and shall report their recommendations and advice to the Group for full deliberation and discussion. Subcommittees have no authority to make decisions on behalf of the chartered Group nor can they report directly to the Department of Defense or any Federal officers or employees who are not Group Members.

FOR FURTHER INFORMATION CONTACT: Contact Jim Freeman, Deputy Committee Management Officer for the Department of Defense, 703–601–6128.

SUPPLEMENTARY INFORMATION: The Group shall meet at the call of the Board's Designated Federal Officer, in consultation with the Group's Chairperson. The Designated Federal Officer, pursuant to DoD policy, shall be a full-time or permanent part-time DoD employee, and shall be appointed in accordance with established DoD policies and procedures. The Designated Federal Officer or duly appointed Alternate Designated Federal Officer shall attend all committee meetings and subcommittee meetings.

Pursuant to 41 CFR 102–3.105(j) and 102–3.140, the public or interested organizations may submit written statements to the Transformation Advisory Group membership about the Group's mission and functions. Written statements may be submitted at any time or in response to the stated agenda of planned meeting of the Transformation Advisory Group.

All written statements shall be submitted to the Designated Federal Officer for the Transformation Advisory Group, and this individual will ensure that the written statements are provided to the membership for their consideration. Contact information for the Transformation Advisory Group's Designated Federal Officer can be obtained from the GSA's FACA Database—*https://www.fido.gov/facadatabase/public.asp.*

The Designated Federal Officer, pursuant to 41 CFR 102–3.150, will announce planned meetings of the Transformation Advisory Group. The Designated Federal Officer, at that time, may provide additional guidance on the submission of written statements that are in response to the stated agenda for the planned meeting in question.

Dated: January 12, 2009.

Patricia L. Toppings,

OSD Federal Register Liaison Officer, Department of Defense.

[FR Doc. E9–879 Filed 1–15–09; 8:45 am]

BILLING CODE 5001–06–P

DEPARTMENT OF DEFENSE

Office of the Secretary

Renewal of Department of Defense Federal Advisory Committees

AGENCY: Department of Defense.

ACTION: Renewal of federal advisory committee.

SUMMARY: Under the provisions of the Federal Advisory Committee Act of 1972, (5 U.S.C. Appendix, as amended), the Government in the Sunshine Act of 1976 (5 U.S.C. 552b, as amended), and 41 CFR 102–3.65, the Department of Defense gives notice that it is renewing the charter for the Inland Waterways Users Board (hereafter referred to as the Board).

The Board is a non-discretionary federal advisory committee established under the provisions of 33 U.S.C. 2251(a), to provide the Secretary of Defense, through the Secretary of the Army and the Assistant Secretary of the Army for Civil works, independent advice and recommendations on matters relating to construction and rehabilitation priorities and spending levels on the commercial navigational features and components of U.S. inland

waterways and inland harbors as defined in Public Law 95–502 and amended by Public Law 99–682. The board shall annually file their recommendations with the Secretary of the Army and with the Congress. The Secretary of the Army or designee may act upon the advice of the Board.

Pursuant to 33 U.S.C. 2251(a), the Board shall be composed of eleven members selected by the Secretary of the Army and appointed by the Secretary of Defense. The members shall be selected so as to represent various regions of the country and a spectrum of the primary users and shippers utilizing the inland and intracoastal waterways for commercial purposes. Due consideration shall be given to assure a balance among the members based on the ton-mile shipments of the various categories of commodities shipped on inland waterways. The Board members shall serve two-year terms, with their appointments renewed on an annual basis. No member, unless otherwise selected by the Secretary of the Army or designee and approved by the Secretary of Defense, shall serve more than four consecutive years on the Board. Appointments vacated prior to the expiration of the term of said appointment shall be filled only for the remainder of the term.

The Secretary of the Army shall choose, and the Secretaries of Agriculture, Transportation, and Commerce may designate, representatives to act as non-voting observers of the Board. In addition, the Secretary of the Army or designee through the Secretary of Defense may appoint consultants with special expertise to assist the Board on an ad hoc basis.

Board Members appointed by the Secretary of Defense, who are not full-time federal officers or employees, shall be appointed as experts and consultants under the authority of 5 U.S.C. 3109, and shall serve as Special Government employees. Pursuant to 10 U.S.C. 1114(a)(3), the members shall serve with the exception of travel and per diem for official travel without compensation. The Secretary of the Army shall select the Board's Chairman and Vice Chairman from the total membership, and these individuals shall serve at the discretion of the Secretary of the Army or designee. The Vice Chairman will act as Chairman in the absence or incapacity of the Chairman, or in the event of a vacancy in the office of the Chairman.

The Board is authorized to establish subcommittees, as necessary and consistent with its mission, and these Subcommittees or Work Groups shall operate under the provisions of the Federal Advisory Committee Act of 1972, the Government in the Sunshine Act of 1976, and other appropriate federal regulations.

Such Subcommittees or Work Groups shall not work independently of the chartered Board, and shall report their recommendations and advice to the Board for full deliberation and discussion. Subcommittees or Working Groups have no authority to make decisions on behalf of the chartered Board nor can they report directly to the Department of Defense or any Federal officers or employees who are not Board Members.

FOR FURTHER INFORMATION CONTACT: Contact Jim Freeman, Deputy Committee Management Officer for the Department of Defense, 703–601–6128.

SUPPLEMENTARY INFORMATION: The Board shall meet at the call of the Board's Designated Federal Officer, in consultation with the Board's Chairperson. The Designated Federal Officer, pursuant to DoD policy, shall be a full-time or permanent part-time DoD employee, and shall be appointed in accordance with established DoD policies and procedures. The Designated Federal Officer or duly appointed Alternate Designated Federal Officer shall attend all committee meetings and subcommittee meetings.

Pursuant to 41 CFR 102–3.105(j) and 102–3.140, the public or interested organizations may submit written statements to the Inland Waterways Users Board membership about the Board's mission and functions. Written statements may be submitted at any time or in response to the stated agenda of planned meeting of the Inland Waterways Users Board.

All written statements shall be submitted to the Designated Federal Officer for the Inland Waterways Users Board, and this individual will ensure that the written statements are provided to the membership for their consideration. Contact information for the Inland Waterways Users Board's Designated Federal Officer can be obtained from the GSA's FACA Database—*https://www.fido.gov/facadatabase/public.asp.*

The Designated Federal Officer, pursuant to 41 CFR 102–3.150, will announce planned meetings of the Inland Waterways Users Board. The Designated Federal Officer, at that time, may provide additional guidance on the submission of written statements that are in response to the stated agenda for the planned meeting in question.

Dated: January 12, 2009.

Patricia L. Toppings,

OSD Federal Register Liaison Officer, Department of Defense.

[FR Doc. E9–883 Filed 1–15–09; 8:45 am]

BILLING CODE 5001–06–P

DEPARTMENT OF DEFENSE

Department of the Army; Corps of Engineers

Inland Waterways Users Board

AGENCY: Department of the Army, U.S. Army Corps of Engineers, DoD.

ACTION: Notice of open meeting.

SUMMARY: In Accordance with 10(a)(2) of the Federal Advisory Committee Act (Pub. L. 92–463), announcement is made of the forthcoming meeting.

Name of Committee: Inland Waterways Users Board (Board).

Date: February 20, 2009.

Location: U.S. Army Corps of Engineers Engineer Research and Development Center (ERDC), Coastal and Hydraulics Laboratory (CHL) Conference Facility, 3909 Halls Ferry Road, Vicksburg, MS 39180–6199, (Point-of-Contact Ms. Dinah McComas, 601–634–2157), with accommodations at the Riverwalk Hotel, 1046 Warrenton Road, Vicksburg, MS (601–634–0100 or 866–615–9125).

Time: Registration will begin at 8 a.m. and the meeting is scheduled to adjourn at approximately 1 p.m.

Agenda: The Board will hear briefings on the status of the funding for inland navigation projects and studies, the status of the Inland Waterways Trust Fund, status of program management team activities for a future business model for the inland waterways system.

For Further Information Contact: Mr. Mark R. Pointon, Headquarters, U.S. Army Corps of Engineers, CECW–ID, 441 G Street, NW., Washington, DC 20314–1000; Ph: 202–761–4691.

Supplementary Information: The meeting is open to the public. Any interested person may attend, appear before, or file statements with the committee at the time and in the manner permitted by the committee.

Brenda S. Bowen,

Army Federal Register Liaison Officer.

[FR Doc. E9–875 Filed 1–15–09; 8:45 am]

BILLING CODE 3720–58–P

DEPARTMENT OF EDUCATION

Notice of Proposed Information Collection Requests

AGENCY: Department of Education.

SUMMARY: The Leader, Information Collection Clearance Division, Regulatory Information Management Services, Office of Management, invites

comments on the proposed information collection requests as required by the Paperwork Reduction Act of 1995.

DATES: Interested persons are invited to submit comments on or before March 17, 2009.

SUPPLEMENTARY INFORMATION: Section 3506 of the Paperwork Reduction Act of 1995 (44 U.S.C. Chapter 35) requires that the Office of Management and Budget (OMB) provide interested Federal agencies and the public an early opportunity to comment on information collection requests. OMB may amend or waive the requirement for public consultation to the extent that public participation in the approval process would defeat the purpose of the information collection, violate State or Federal law, or substantially interfere with any agency's ability to perform its statutory obligations. The Leader, Regulatory Information Management Services, Office of Management, publishes that notice containing proposed information collection requests prior to submission of these requests to OMB. Each proposed information collection, grouped by office, contains the following: (1) Type of review requested, *e.g.* new, revision, extension, existing or reinstatement; (2) Title; (3) Summary of the collection; (4) Description of the need for, and proposed use of, the information; (5) Respondents and frequency of collection; and (6) Reporting and/or Recordkeeping burden. OMB invites public comment.

The Department of Education is especially interested in public comment addressing the following issues: (1) Is this collection necessary to the proper functions of the Department; (2) will this information be processed and used in a timely manner; (3) is the estimate of burden accurate; (4) how might the Department enhance the quality, utility, and clarity of the information to be collected; and (5) how might the Department minimize the burden of this collection on the respondents, including through the use of information technology.

Dated: January 12, 2009.

Angela C. Arrington,

Leader, Information Collections Clearance Division, Regulatory Information Management Services, Office of Management.

Federal Student Aid

Type of Review: Revision.

Title: William D. Ford Federal Direct Loan Program (Direct Loan) Program: Internship/Residency and Loan Debt Burden Forbearance Request Forms.

Frequency: On Occasion.

Affected Public: Individuals or household.

Reporting and Recordkeeping Hour Burden:

Responses: 5,115.

Burden Hours: 1,023.

Abstract: These forms serve as the means by which a borrower may request forbearance of repayment on his or her Direct Loan Program loans based on participation in an eligible internship/residency program or based on having federal education loan debt burden that equals or exceeds 20% of the borrower's monthly gross income. The U.S. Department of Education uses the information collected on these forms to determine whether a borrower meets the eligibility requirements for the specific forbearance type that the borrower has requested.

Requests for copies of the proposed information collection request may be accessed from *http://edicsweb.ed.gov*, by selecting the ''Browse Pending Collections'' link and by clicking on link number 3930. When you access the information collection, click on ''Download Attachments'' to view. Written requests for information should be addressed to U.S. Department of Education, 400 Maryland Avenue, SW., LBJ, Washington, DC 20202–4537. Requests may also be electronically mailed to *ICDocketMgr@ed.gov* or faxed to 202–401–0920. Please specify the complete title of the information collection when making your request.

Comments regarding burden and/or the collection activity requirements should be electronically mailed to *ICDocketMgr@ed.gov*. Individuals who use a telecommunications device for the deaf (TDD) may call the Federal Information Relay Service (FIRS) at 1–800–877–8339.

[FR Doc. E9–886 Filed 1–15–09; 8:45 am]

BILLING CODE 4000–01–P

DEPARTMENT OF EDUCATION

Office of Safe and Drug-Free Schools; Overview Information; Carol M. White Physical Education Program; Notice Inviting Applications for New Awards for Fiscal Year (FY) 2009

Catalog of Federal Domestic Assistance (CFDA) Number: 84.215F.

Dates:

Applications Available: January 16, 2009.

Deadline for Transmittal of Applications: March 6, 2009.

Deadline for Intergovernmental Review: May 6, 2009.

Full Text of Announcement

I. Funding Opportunity Description

Purpose of Program: The Carol M. White Physical Education Program (PEP) provides grants to local educational agencies (LEAs) and community-based organizations (CBOs) to initiate, expand, or enhance physical education programs, including after-school programs, for students in kindergarten through 12th grade. Grant recipients must implement programs that help students make progress toward meeting State standards.

Priorities: This competition has three priorities—one absolute priority and a competitive preference priority and invitational priority within the absolute priority. In accordance with 34 CFR 75.105(b)(iv), the absolute priority is from sections 5503 and 5504(a) of the Elementary and Secondary Education Act of 1965, as amended by the No Child Left Behind Act of 2001 (ESEA) (20 U.S.C. 7261b, 7261c). In accordance with 34 CFR 75.105(b)(2)(ii), the competitive preference priority is from 34 CFR 75.225.

Absolute Priority: For FY 2009 and any subsequent year in which we make awards from the list of unfunded applicants from this competition, this priority is an absolute priority. Under 34 CFR 75.105(c)(3), we consider only applications that meet this priority.

This priority is the initiation, expansion, and improvement of physical education programs (which may include after-school programs) in order to make progress toward meeting State standards for physical education for kindergarten through 12th grade students by (1) providing equipment and support to enable students to participate actively in physical education activities; and (2) providing funds for staff and teacher training and education.

A physical education program funded under this absolute priority must provide for one or more of the following:

(1) Fitness education and assessment to help students understand, improve, or maintain their physical well-being.

(2) Instruction in a variety of motor skills and physical activities designed to enhance the physical, mental, and social or emotional development of every student.

(3) Development of, and instruction in, cognitive concepts about motor skills and physical fitness that support a lifelong healthy lifestyle.

(4) Opportunities to develop positive social and cooperative skills through physical activity participation.

(5) Instruction in healthy eating habits and good nutrition.

(6) Opportunities for professional development for teachers of physical education to stay abreast of the latest research, issues, and trends in the field of physical education.

Competitive Preference Priority: Within this absolute priority, we give competitive preference to applications that address the following priority.

This priority is for applications from novice applicants.

The term *novice applicant* means any applicant for a grant from the Department of Education that—

(1) Has never received a grant or subgrant under the program from which it seeks funding;

(2) Has never been a member of a group application, submitted in accordance with 34 CFR 75.127 through 75.129, that received a grant under the program from which it seeks funding; and

(3) Has not had an active discretionary grant from the Federal Government in the five years before the deadline date for transmittal of applications under the program. For the purpose of this requirement, a grant is active until the end of the grant's project or funding period, including any extensions of those periods that extend the grantee's authority to obligate funds.

In the case of a group application submitted in accordance with 34 CFR 75.127 through 75.129, to qualify as a novice applicant, all group members must meet the requirements described.

Under 34 CFR 75.105(c)(2)(i) we award an additional 5 points to an application that meets the competitive preference priority.

Invitational Priority: Within this absolute priority, we are particularly interested in applications that address the following invitational priority. Under 34 CFR 75.105(c)(1) we do not give an application that meets this invitational priority a competitive or absolute preference over other applications.

This priority is for projects that propose programs to address problems identified by the applicant in a self-assessment, using the Physical Education and Other Physical Activity Programs and Nutrition Services modules of the Centers for Disease Control and Prevention's School Health Index (SHI) that are appropriate for the schools to be served by the grant. Applicants addressing this priority in their applications are invited to include their SHI scores for these two modules in their application for funding, and to plan on completing the same Physical Education and Other Physical Activity Programs and Nutrition Services modules of the SHI at the end of the project period.

CBOs are invited to partner with an LEA or school to complete the Physical Education and Other Physical Activity Programs and Nutrition Services modules of the SHI since the self-assessment tool is designed to assess school-based programs and policies related to physical activity and nutrition services.

Information about the SHI is available at the Centers for Disease Control and Prevention's Web site at *http://www.cdc.gov/healthyyouth.*

Program Authority: 20 U.S.C. 7261–7261f.

Applicable Regulations: (a) The Education Department General Administrative Regulations (EDGAR) in 34 CFR parts 74, 75, 77, 79, 80, 81, 82, 84, 85, 86, 97, 98, 99, and 299. (b) The notice of final eligibility requirement for the Office of Safe and Drug-Free Schools discretionary grant programs published in the **Federal Register** on December 4, 2006 (71 FR 70369).

Note: The regulations in 34 CFR part 79 apply to all applicants except federally recognized Indian tribes.

Note: The regulations in 34 CFR part 86 apply to institutions of higher education only.

II. Award Information

Type of Award: Discretionary grants.

Estimated Available Funds: The Administration's budget request for FY 2009 does not include funds for this program. However, we are inviting applications now to allow enough time to complete the grant process before the end of the current fiscal year, if Congress appropriates funds for this program.

Contingent upon the availability of funds and the quality of applications, we may make additional awards later in FY 2009 and in subsequent years from the list of unfunded applicants from this competition.

Estimated Range of Awards: $100,000–$500,000.

Estimated Average Size of Awards: $300,000.

Estimated Number of Awards: 95.

Note: The Department is not bound by any estimates in this notice.

Project Period: Up to 36 months.

III. Eligibility Information

1. *Eligible Applicants:* (a) LEAs, including charter schools that are considered LEAs under State law, and CBOs, including faith-based organizations provided that they meet the applicable statutory and regulatory requirements.

(b) The Secretary limits eligibility under this discretionary grant competition to LEAs or CBOs that do not currently have an active grant under the PEP program. For the purpose of this eligibility requirement, a grant is considered active until the end of the grant's project or funding period, including any extensions of those periods that extend the grantee's authority to obligate funds.

2. (a) *Cost Sharing or Matching:* In accordance with section 5506 of the ESEA, the Federal share of the project costs may not exceed (a) 90 percent of the total cost of a program for the first year for which the program receives assistance; and (b) 75 percent of such cost for the second and each subsequent year.

(b) *Supplement-Not-Supplant:* This competition involves supplement-not-supplant funding requirements.

Funds made available under this program must be used to supplement, and not supplant, any other Federal, State, or local funds available for physical education activities in accordance with section 5507 of the ESEA.

3. *Other:* An application for funds under this program may provide for the participation, in the activities funded, of (a) students enrolled in private nonprofit elementary schools or secondary schools, and their parents and teachers; or (b) home-schooled students, and their parents and teachers.

IV. Application and Submission Information

1. *Address to Request Application Package:* You can obtain an application package via the Internet or from the Education Publications Center (ED Pubs). To obtain a copy via the Internet, use the following address: *http://www.ed.gov/programs/whitephysed/applicant.html.* To obtain a copy from ED Pubs, write, fax, or call the following: Education Publications Center, P.O. Box 1398, Jessup, MD 20794–1398. Telephone, toll free: 1–877–433–7827. Fax: (301) 470–1244. If you use a telecommunications device for the deaf (TDD), call, toll free: 1–877–576–7734.

You can contact ED Pubs at its Web site, also: *http://www.ed.gov/pubs/edpubs.html* or at its e-mail address: *edpubs@inet.ed.gov.*

If you request an application from ED Pubs, be sure to identify this program or competition as follows: CFDA number 84.215F.

Individuals with disabilities can obtain a copy of the application package

in an accessible format (*e.g.*, braille, large print, audiotape, or computer diskette) by contacting the person or team listed under *Alternative Format* in section VIII of this notice.

2. *Content and Form of Application Submission:* Requirements concerning the content of an application, together with the forms you must submit, are in the application package for this competition.

3. *Submission Dates and Times:*

Applications Available: January 16, 2009.

Deadline for Transmittal of Applications: March 6, 2009.

Applications for grants under this program may be submitted electronically using the Grants.gov Apply site (Grants.gov), or in paper format by mail or hand delivery. For information (including dates and times) about how to submit your application electronically, or in paper format by mail or hand delivery, please refer to section IV.6. Other Submission Requirements of this notice.

We do not consider an application that does not comply with the deadline requirements.

Individuals with disabilities who need an accommodation or auxiliary aid in connection with the application process should contact the person listed under **FOR FURTHER INFORMATION CONTACT** in section VII of this notice. If the Department provides an accommodation or auxiliary aid to an individual with a disability in connection with the application process, the individual's application remains subject to all other requirements and limitations in this notice.

Deadline for Intergovernmental Review: May 6, 2009.

4. *Intergovernmental Review:* This program is subject to Executive Order 12372 and the regulations in 34 CFR part 79. Information about Intergovernmental Review of Federal Programs under Executive Order 12372 is in the application package for this program.

5. *Funding Restrictions:* Funds may not be used for construction activities or for extracurricular activities, such as team sports and Reserve Officers' Training Corps program activities.

In accordance with section 5505(b) of the ESEA, not more than five percent of grant funds provided under this program to an LEA or CBO for any fiscal year may be used for administrative expenses.

We reference additional regulations outlining funding restrictions in the *Applicable Regulations* section of this notice. Information about prohibited activities and use of funds also is included in the application package for this competition.

6. *Other Submission Requirements:* Applications for grants under this program may be submitted electronically or in paper format by mail or hand delivery.

a. *Electronic Submission of Applications.*

We are participating as a partner in the Governmentwide Grants.gov Apply site. The Carol M. White Physical Education Program, CFDA Number 84.215F, is included in this project. We request your participation in Grants.gov.

If you choose to submit your application electronically, you must use the Governmentwide Grants.gov Apply site at *http://www.Grants.gov.* Through this site, you will be able to download a copy of the application package, complete it offline, and then upload and submit your application. You may not e-mail an electronic copy of a grant application to us.

You may access the electronic grant application for the Carol M. White Physical Education Program at *http://www.Grants.gov.* You must search for the downloadable application package for this program by the CFDA number. Do not include the CFDA number's alpha suffix in your search (*e.g.*, search for 84.215, not 84.215F).

Please note the following:

- Your participation in Grants.gov is voluntary.
- When you enter the Grants.gov site, you will find information about submitting an application electronically through the site, as well as the hours of operation.
- Applications received by Grants.gov are date and time stamped. Your application must be fully uploaded and submitted and must be date and time stamped by the Grants.gov system no later than 4:30:00 p.m., Washington, DC time, on the application deadline date. Except as otherwise noted in this section, we will not accept your application if it is received—that is, date and time stamped by the Grants.gov system—after 4:30:00 p.m., Washington, DC time, on the application deadline date. We do not consider an application that does not comply with the deadline requirements. When we retrieve your application from Grants.gov, we will notify you if we are rejecting your application because it was date and time stamped by the Grants.gov system after 4:30:00 p.m., Washington, DC time, on the application deadline date.
- The amount of time it can take to upload an application will vary depending on a variety of factors, including the size of the application and the speed of your Internet connection. Therefore, we strongly recommend that you do not wait until the application deadline date to begin the submission process through Grants.gov.
- You should review and follow the Education Submission Procedures for submitting an application through Grants.gov that are included in the application package for this program to ensure that you submit your application in a timely manner to the Grants.gov system. You can also find the Education Submission Procedures pertaining to Grants.gov at *http://e-Grants.ed.gov/help/GrantsgovSubmissionProcedures.pdf.*
- To submit your application via Grants.gov, you must complete all steps in the Grants.gov registration process (see *http://www.grants.gov/applicants/get_registered.jsp*). These steps include (1) registering your organization, a multi-part process that includes registration with the Central Contractor Registry (CCR); (2) registering yourself as an Authorized Organization Representative (AOR); and (3) getting authorized as an AOR by your organization. Details on these steps are outlined in the Grants.gov 3-Step Registration Guide (see *http://www.grants.gov/section910/Grants.govRegistrationBrochure.pdf*). You also must provide on your application the same D-U-N-S Number used with this registration. Please note that the registration process may take five or more business days to complete, and you must have completed all registration steps to allow you to submit successfully an application via Grants.gov. In addition you will need to update your CCR registration on an annual basis. This may take three or more business days to complete.
- You will not receive additional point value because you submit your application in electronic format, nor will we penalize you if you submit your application in paper format.
- If you submit your application electronically, you must submit all documents electronically, including all information you typically provide on the following forms: Application for Federal Assistance (SF 424), the Department of Education Supplemental Information for SF 424, Budget Information—Non-Construction Programs (ED 524), and all necessary assurances and certifications.
- If you submit your application electronically, you must attach any narrative sections of your application as files in a .DOC (document), .RTF (rich text), or .PDF (Portable Document) format. If you upload a file type other than the three file types specified in this

paragraph or submit a password-protected file, we will not review that material.

• Your electronic application must comply with any page-limit requirements described in this notice.

• After you electronically submit your application, you will receive from Grants.gov an automatic notification of receipt that contains a Grants.gov tracking number. (This notification indicates receipt by Grants.gov only, not receipt by the Department.) The Department then will retrieve your application from Grants.gov and send a second notification to you by e-mail. This second notification indicates that the Department has received your application and has assigned your application a PR/Award number (an ED-specified identifying number unique to your application).

• We may request that you provide us original signatures on forms at a later date.

Application Deadline Date Extension in Case of Technical Issues with the Grants.gov System: If you are experiencing problems submitting your application through Grants.gov, please contact the Grants.gov Support Desk, toll free, at 1–800–518–4726. You must obtain a Grants.gov Support Desk Case Number and must keep a record of it.

If you are prevented from electronically submitting your application on the application deadline date because of technical problems with the Grants.gov system, we will grant you an extension until 4:30:00 p.m., Washington, DC time, the following business day to enable you to transmit your application electronically or by hand delivery. You also may mail your application by following the mailing instructions described elsewhere in this notice.

If you submit an application after 4:30:00 p.m., Washington, DC time, on the application deadline date, please contact the person listed under **FOR FURTHER INFORMATION CONTACT** in section VII of this notice and provide an explanation of the technical problem you experienced with Grants.gov, along with the Grants.gov Support Desk Case Number. We will accept your application if we can confirm that a technical problem occurred with the Grants.gov system and that that problem affected your ability to submit your application by 4:30:00 p.m., Washington, DC time, on the application deadline date. The Department will contact you after a determination is made on whether your application will be accepted.

Note: The extensions to which we refer in this section apply only to the unavailability of, or technical problems with, the Grants.gov system. We will not grant you an extension if you failed to fully register to submit your application to Grants.gov before the application deadline date and time or if the technical problem you experienced is unrelated to the Grants.gov system.

b. *Submission of Paper Applications by Mail.*

If you submit your application in paper format by mail (through the U.S. Postal Service or a commercial carrier), you must mail the original and two copies of your application, on or before the application deadline date, to the Department at the following address: U.S. Department of Education, Application Control Center, Attention: (CFDA Number 84.215F), LBJ Basement Level 1, 400 Maryland Avenue, SW., Washington, DC 20202–4260.

You must show proof of mailing consisting of one of the following:

(1) A legibly dated U.S. Postal Service postmark.

(2) A legible mail receipt with the date of mailing stamped by the U.S. Postal Service.

(3) A dated shipping label, invoice, or receipt from a commercial carrier.

(4) Any other proof of mailing acceptable to the Secretary of the U.S. Department of Education.

If you mail your application through the U.S. Postal Service, we do not accept either of the following as proof of mailing:

(1) A private metered postmark.

(2) A mail receipt that is not dated by the U.S. Postal Service.

If your application is postmarked after the application deadline date, we will not consider your application.

Note: The U.S. Postal Service does not uniformly provide a dated postmark. Before relying on this method, you should check with your local post office.

c. *Submission of Paper Applications by Hand Delivery.*

If you submit your application in paper format by hand delivery, you (or a courier service) must deliver the original and two copies of your application by hand, on or before the application deadline date, to the Department at the following address: U.S. Department of Education, Application Control Center, Attention: (CFDA Number 84.215F), 550 12th Street, SW., Room 7041, Potomac Center Plaza, Washington, DC 20202–4260.

The Application Control Center accepts hand deliveries daily between 8:00 a.m. and 4:30:00 p.m., Washington, DC time, except Saturdays, Sundays, and Federal holidays.

Note for Mail or Hand Delivery of Paper Applications: If you mail or hand deliver your application to the Department—

(1) You must indicate on the envelope and—if not provided by the Department—in Item 11 of the SF 424 the CFDA number, including suffix letter, if any, of the competition under which you are submitting your application; and

(2) The Application Control Center will mail to you a notification of receipt of your grant application. If you do not receive this notification within 15 business days from the application deadline date, you should call the U.S. Department of Education Application Control Center at (202) 245–6288.

V. Application Review Information

1. *Selection Criteria:* The selection criteria for this program are from 34 CFR 75.210 and are listed in the application package.

2. *Review and Selection Process:* An additional factor we consider in selecting an application for an award is equitable distribution of awards among LEAs and CBOs serving urban and rural areas. (*See* 20 U.S.C. 7261e(b).)

VI. Award Administration Information

1. *Award Notices:* If your application is successful, we notify your U.S. Representative and U.S. Senators and send you a Grant Award Notification (GAN). We may notify you informally, also.

If your application is not evaluated or not selected for funding, we notify you.

2. *Administrative and National Policy Requirements:* We identify administrative and national policy requirements in the application package and reference these and other requirements in the *Applicable Regulations* section of this notice.

We reference the regulations outlining the terms and conditions of an award in the *Applicable Regulations* section of this notice and include these and other specific conditions in the GAN. The GAN also incorporates your approved application as part of your binding commitments under the grant.

3. *Reporting:* There are reporting requirements under this program, including under section 5505(a) of the ESEA and 34 CFR 75.118 and 75.720. In accordance with section 5505(a) of the ESEA, grantees under this program are required to submit an annual report that—

(1) Describes the activities conducted during the preceding year; and

(2) Demonstrates that progress has been made toward meeting State standards for physical education.

If you receive a multi-year award, you must submit an annual performance report that provides the most current performance and financial expenditure information as directed by the Secretary under 34 CFR 75.118. The Secretary

may also require more frequent performance reports under 34 CFR 75.720(c).

This annual report must also address progress toward meeting the performance and efficiency measures established by the Secretary for this program and described in the next section of this notice.

At the end of the project period, a final performance and financial report must be submitted as specified by the Secretary in 34 CFR 75.720. For specific requirements on reporting, please go to *http://www.ed.gov/fund/grant/apply/appforms/appforms.html.*

4. *Performance Measures:* The Secretary has established the following key performance measures for collecting data to use in assessing the effectiveness of PEP.

(a) *Physical Activity.*

(i) The percentage of students served by the grant who engage in 150 minutes of moderate to vigorous physical activity per week (elementary school students); and

(ii) The percentage of students served by the grant who engage in 225 minutes of moderate to vigorous physical activity per week (middle and high school students).

(b) *Efficiency.* The cost (based on expenditures of the grant as well as matching funds) per student who achieves the level of physical activity required to meet the physical activity measure (150 minutes of moderate to vigorous physical activity per week for elementary school students, and 225 minutes of moderate to vigorous physical activity per week for middle and high school students).

These measures constitute the Department's measures of success for this program. Consequently, applicants for a grant under this program are advised to give careful consideration to these measures in conceptualizing the approach and evaluation of their proposed project. If funded, applicants will be asked to collect and report data in their performance and final reports about progress toward these measures. For specific requirements on grantee reporting, please go to *http://www.ed.gov/fund/grant/apply/appforms/appforms.html.*

VII. Agency Contact

FOR FURTHER INFORMATION CONTACT: Carlette Huntley, U.S. Department of Education, 400 Maryland Avenue, SW., room 10071, Potomac Center Plaza, Washington, DC 20202. Telephone: 202–245–7871 or by e-mail: *Carlette.Huntley@ed.gov.*

If you use a TDD, call the FRS, toll free, at 1–800–877–8339.

VIII. Other Information

Accessible Format: Individuals with disabilities can obtain this document and a copy of the application package in an accessible format (*e.g.*, braille, large print, audiotape, or computer diskette) on request to the program contact person listed under **FOR FURTHER INFORMATION CONTACT** in section VII of this notice.

Electronic Access to This Document: You can view this document, as well as all other documents of this Department published in the **Federal Register**, in text or Adobe Portable Document Format (PDF) on the Internet at the following site: *http://www.ed.gov/news/fedregister.*

To use PDF you must have Adobe Acrobat Reader, which is available free at this site. If you have questions about using PDF, call the U.S. Government Printing Office (GPO), toll free, at 1–888–293–6498; or in the Washington, DC area at (202) 512–1530.

Note: The official version of this document is the document published in the **Federal Register**. Free Internet access to the official edition of the **Federal Register** and the Code of Federal Regulations is available on GPO Access at: *http://www.gpoaccess.gov/nara/index.html.*

Dated: January 12, 2009.

Deborah A. Price,

Assistant Deputy Secretary for Safe and Drug-Free Schools.

[FR Doc. E9–956 Filed 1–15–09; 8:45 am]

BILLING CODE 4000–01–P

DEPARTMENT OF EDUCATION

Office of Postsecondary Education; Overview Information; Higher Education Disaster Relief; Notice Inviting Applications for New Awards for Fiscal Year (FY) 2009

Catalog of Federal Domestic Assistance (CFDA) Number: 84.938R.

DATES: Applications Available: January 16, 2009.

Deadline for Transmittal of Pre-Applications: January 27, 2009.

Deadline for Transmittal of Applications: February 26, 2009.

Full Text of Announcement

I. Funding Opportunity Description

Purpose of Program: The Higher Education Disaster Relief Grants Program provides funds to institutions of higher education (IHEs) that are located in an area affected by hurricanes, floods, and other natural disasters occurring during 2008 for which the President declared a major disaster under Title IV of the Robert T. Stafford Disaster Relief and Emergency Assistance Act of 1974. The funds may only be used to defray the expenses incurred by IHEs that were forced to close, or relocate, or whose operations were impaired as a result of damage directly caused by such hurricanes, floods, and other natural disasters occurring during 2008. Funds may be used to cover lost revenue, reimbursement for expenses already incurred, and for construction. Funds may also be used to enable these IHEs to provide grants to their students who attend the IHE for academic years beginning on or after July 1, 2008.

Criteria for Awarding Funds: Under the Consolidated Security, Disaster Assistance, and Continuing Appropriations Act, 2009 (Pub. L. 110–329), only IHEs as defined in section 101 or section 102(c) of the Higher Education Act of 1965, as amended (HEA), that are located in an area in which a major disaster was declared in accordance with section 401 of the Robert T. Stafford Disaster Relief and Emergency Assistance Act during calendar year 2008, are eligible to apply for funds under this program. A list of these areas is available at: *http://www.gismaps.fema.gov/2008pages/lcurrent.shtm.*

Public Law 110–329 authorizes the Department to make these funds available based on criteria established by the Secretary. Accordingly, the Secretary establishes the following factors as criteria that will be used in allocating these funds:

(1) The expenses that would have been covered by revenues lost by the IHE as a direct result of the major disaster;

(2) The expenses incurred by the IHE in remedying the effects of the disaster;

(3) The costs of construction associated with physical damage caused by the disaster; and

(4) Any amount of any insurance settlement or other reimbursement received by the IHE including from a Federal or other relief agency. An IHE must include information responsive to each of these criteria in its pre-application. After reviewing the pre-applications, the Secretary may decide to use the number or amount of Pell Grants received at any time during the 2006–07 and 2007–08 award years, as reflected in the Department's records, as a factor in determining the amount of the individual grants to ensure a fair distribution of funds in accordance with statutory requirements.

Waiver of Proposed Rulemaking: Under the Administrative Procedure Act (APA) (5 U.S.C. 553), and section 437 of

the General Education Provisions Act (GEPA) (20 U.S.C. 1232), the Department generally offers interested parties the opportunity to comment on proposed selection criteria. However, Public Law 110–329 specifically exempts the establishment of criteria by the Secretary for the award of funds under this program from the rulemaking requirements of the APA and GEPA.

Program Authority: The Consolidated Security, Disaster Assistance, and Continuing Appropriations Act, 2009 (Pub. L. 110–329) and 20 U.S.C. 1138.

Applicable Regulations: The Education Department General Administrative Regulations (EDGAR) in 34 CFR parts 74, 75, 77, 80, 82, 84, 85, 86, 97, 98, and 99.

II. Award Information

Type of Award: Discretionary grants.

Estimated Available Funds: $15,000,000.

Estimated Range of Awards: $10,000—$1,000,000.

Estimated Average Size of Awards: $300,000.

Estimated Number of Awards: 50.

Note: The Department is not bound by any estimates in this notice.

Project Period: 12 months, except for construction grants, which may be up to 36 months.

III. Eligibility Information

1. *Eligible Applicants:* IHEs (as defined in section 101 or section 102(c) of the HEA) that are located in an area affected by hurricanes, floods, and other natural disasters occurring during 2008, for which the President declared a major disaster under Title IV of the Robert T. Stafford Disaster Relief and Emergency Assistance Act of 1974, are eligible to apply for funds under this program. A list of these areas is available at: *http://www.gismaps.fema.gov/2008pages/lcurrent.shtm.*

2. *Cost Sharing or Matching:* This program does not require cost sharing or matching.

IV. Application and Submission Information

1. *Address to Request Application or Pre-Application Package:* Cassandra Courtney, Fund for the Improvement of Postsecondary Education, U.S. Department of Education, 1990 K Street, NW., room 6166, Washington, DC 20006–8544. Telephone: (202) 502–7506 or by e-mail: *HEDR@ed.gov or Cassandra.Courtney@ed.gov.*

If you use a telecommunications device for the deaf (TDD), call the Federal Relay Service (FRS), toll free, at 1–800–877–8339.

Individuals with disabilities can obtain a copy of the application or pre-application package in an accessible format (e.g., Braille, large print, audiotape, or computer diskette) by contacting the program contact person listed in this section.

2. *Content and Form of Application Submission:* Requirements concerning the content of an application, together with the forms you must submit, are in the application package for this program.

Pre-Application: IHEs intending to submit an application for funds under the Higher Education Disaster Relief Grant Program must first complete and submit a pre-application data information form from which institutional allotments will be calculated. Data forms and instructions can be downloaded from: *http://www.ed.gov/OPE* (click on the Higher Education Disaster Relief link). Complete the form and send it to: *HEDR@ed.gov* by the date established under *Deadline for Transmittal of Pre-Applications.* Within one week of the Pre-Application Deadline, the Department will calculate the applicant IHE's allotment and e-mail the amount back to the contact person identified by the IHE on the pre-application form. The eligible IHEs will then have until February 26, 2009 to submit their application and budget information to the Department through Grants.gov.

Page Limit: The application narrative (Part III of the application) is where you, the applicant, address the selection criteria that reviewers use to evaluate your application. You must limit the application narrative [Part III] to the equivalent of no more than 25 pages, using the following standards:

- A ''page'' is 8.5″ x 11″, on one side only, with 1″ margins at the top, bottom, and both sides.
- Double space (no more than three lines per vertical inch) all text in the application narrative, including titles, headings, footnotes, quotations, references, and captions, as well as all text in charts, tables, figures, and graphs.
- Use a font that is either 12 point or larger; or, no smaller than 10 pitch (characters per inch).
- Use one of the following fonts: Times New Roman, Courier, Courier New, or Arial. An application submitted in any other font (including Times Roman or Arial Narrow) will not be accepted.

The page limit does not apply to Part I, the cover sheet; Part II, the budget section, including the narrative budget justification; Part IV, the assurances and certifications; or the one-page abstract, the resumes, the bibliography, or the letters of support. However, the page limit does apply to all of the application narrative section [Part III].

We will reject your application if you exceed the page limit; or, if you apply other standards and exceed the equivalent of the page limit.

3. *Submission Dates and Times:*

Applications Available: January 16, 2009.

Deadline for Transmittal of Pre-Applications: January 27, 2009.

Deadline for Transmittal of Applications: February 26, 2009.

Applications for grants under this competition must be submitted electronically using the Grants.gov Apply site (Grants.gov). For information (including dates and times) about how to submit your application electronically, or in paper format by mail or hand delivery if you qualify for an exception to the electronic submission requirement, please refer to Section IV. 6. *Other Submission Requirements of this notice.*

We do not consider an application that does not comply with the deadline requirements.

Individuals with disabilities who need an accommodation or auxiliary aid in connection with the application process should contact the person listed under **FOR FURTHER INFORMATION CONTACT** in Section VII of this notice. If the Department provides an accommodation or auxiliary aid to an individual with a disability in connection with the application process, the individual's application remains subject to all other requirements and limitations in this notice.

4. *Intergovernmental Review:* This program is not subject to Executive Order 12372 and the regulations in 34 CFR part 79.

5. *Funding Restrictions:* Funds can be used only to defray the expenses (including lost revenue, reimbursement for expenses already incurred, and for construction) incurred by IHEs that were forced to close, or relocate, or whose operations were impaired as a result of damage directly caused by hurricanes, floods, and other natural disasters occurring during 2008 for which the President declared a major disaster under Title IV of the Robert T. Stafford Disaster Relief and Emergency Assistance Act of 1974, and to enable these IHEs to provide grants to their students who attend the IHE for academic years beginning on or after July 1, 2008.

6. *Other Submission Requirements:* Applications for grants under this program must be submitted

electronically unless you qualify for an exception to this requirement in accordance with the instructions in this section.

a. *Electronic Submission of Applications.*

Applications for grants under the Higher Education Disaster Relief Program, CFDA number 84.938R, must be submitted electronically using the Governmentwide Grants.gov Apply site at *http://www.Grants.gov.* Through this site, you will be able to download a copy of the application package, complete it offline, and then upload and submit your application. You may not e-mail an electronic copy of a grant application to us.

We will reject your application if you submit it in paper format unless, as described elsewhere in this section, you qualify for one of the exceptions to the electronic submission requirement and submit, no later than two weeks before the application deadline date, a written statement to the Department that you qualify for one of these exceptions. Further information regarding calculation of the date that is two weeks before the application deadline date is provided later in this section under *Exception to Electronic Submission Requirement.*

You may access the electronic grant application for the Higher Education Disaster Relief Grant Program at *http://www.Grants.gov.* You must search for the downloadable application package for this program by the CFDA number. Do not include the CFDA number's alpha suffix in your search (e.g., search for 84.938, not 84.938R).

Please note the following:

- When you enter the Grants.gov site, you will find information about submitting an application electronically through the site, as well as the hours of operation.
- Applications received by Grants.gov are date and time stamped. Your application must be fully uploaded and submitted and must be date and time stamped by the Grants.gov system no later than 4:30:00 p.m., Washington, DC time, on the application deadline date. Except as otherwise noted in this section, we will not accept your application if it is received—that is, date and time stamped by the Grants.gov system—after 4:30:00 p.m., Washington, DC time, on the application deadline date. We do not consider an application that does not comply with the deadline requirements. When we retrieve your application from Grants.gov, we will notify you if we are rejecting your application because it was date and time stamped by the Grants.gov system after 4:30:00 p.m., Washington, DC time, on the application deadline date.
- The amount of time it can take to upload an application will vary depending on a variety of factors, including the size of the application and the speed of your Internet connection. Therefore, we strongly recommend that you do not wait until the application deadline date to begin the submission process through Grants.gov.
- You should review and follow the Education Submission Procedures for submitting an application through Grants.gov that are included in the application package for this competition to ensure that you submit your application in a timely manner to the Grants.gov system. You can also find the Education Submission Procedures pertaining to Grants.gov at *http://e-Grants.ed.gov/help/Grantsgov SubmissionProcedures.pdf.*
- To submit your application via Grants.gov, you must complete all steps in the Grants.gov registration process (see *http://www.grants.gov/applicants/get_registered.jsp*). These steps include (1) Registering your organization, a multi-part process that includes registration with the Central Contractor Registry (CCR); (2) registering yourself as an Authorized Organization Representative (AOR); and (3) getting authorized as an AOR by your organization. Details on these steps are outlined in the Grants.gov 3-Step Registration Guide (see *http://www.grants.gov/section910/Grants.govRegistrationBrochure.pdf*). You also must provide on your application the same D–U–N–S Number used with this registration. Please note that the registration process may take five or more business days to complete, and you must have completed all registration steps to allow you to submit successfully an application via Grants.gov. In addition, you will need to update your CCR registration on an annual basis. This may take three or more business days to complete.
- You will not receive additional point value because you submit your application in electronic format, nor will we penalize you if you qualify for an exception to the electronic submission requirement, as described elsewhere in this section, and submit your application in paper format.
- You must submit all documents electronically, including all information you typically provide on the following forms: Application for Federal Assistance (SF 424), the Department of Education Supplemental Information for SF 424, Budget Information—Non-Construction Programs (ED 524), and all necessary assurances and certifications.
- You must attach any narrative sections of your application as files in a .DOC (document), .RTF (rich text), or .PDF (Portable Document) format. If you upload a file type other than the three file types specified in this paragraph or submit a password-protected file, we will not review that material.
- Your electronic application must comply with any page-limit requirements described in this notice.
- After you electronically submit your application, you will receive from Grants.gov an automatic notification of receipt that contains a Grants.gov tracking number. (This notification indicates receipt by Grants.gov only, not receipt by the Department.) The Department then will retrieve your application from Grants.gov and send a second notification to you by e-mail. This second notification indicates that the Department has received your application and has assigned your application a PR/Award Number (an ED-specified identifying number unique to your application).
- We may request that you provide us original signatures on forms at a later date.

Application Deadline Date Extension in Case of Technical Issues with the Grants.gov System: If you are experiencing problems submitting your application through Grants.gov, please contact the Grants.gov Support Desk, toll free, at 1–800–518–4726. You must obtain a Grants.gov Support Desk Case Number and must keep a record of it.

If you are prevented from electronically submitting your application on the application deadline date because of technical problems with the Grants.gov system, we will grant you an extension until 4:30:00 p.m., Washington, DC time, the following business day to enable you to transmit your application electronically or by hand delivery. You also may mail your application by following the mailing instructions described elsewhere in this notice.

If you submit an application after 4:30:00 p.m., Washington, DC time, on the application deadline date, please contact the person listed under **FOR FURTHER INFORMATION CONTACT** in section VII of this notice and provide an explanation of the technical problem you experienced with Grants.gov, along with the Grants.gov Support Desk Case Number. We will accept your application if we can confirm that a technical problem occurred with the Grants.gov system and that that problem affected your ability to submit your application by 4:30:00 p.m., Washington, DC time, on the application deadline date. The

Department will contact you after a determination is made on whether your application will be accepted.

Note: The extensions to which we refer in this section apply only to the unavailability of, or technical problems with, the Grants.gov system. We will not grant you an extension if you failed to fully register to submit your application to Grants.gov before the application deadline date and time or if the technical problem you experienced is unrelated to the Grants.gov system.

Exception to Electronic Submission Requirement: You qualify for an exception to the electronic submission requirement, and may submit your application in paper format, if you are unable to submit an application through the Grants.gov system because—

- You do not have access to the Internet; or
- You do not have the capacity to upload large documents to the Grants.gov system; and
- No later than two weeks before the application deadline date (14 calendar days or, if the fourteenth calendar day before the application deadline date falls on a Federal holiday, the next business day following the Federal holiday), you mail or fax a written statement to the Department, explaining which of the two grounds for an exception prevent you from using the Internet to submit your application.

If you mail your written statement to the Department, it must be postmarked no later than two weeks before the application deadline date. If you fax your written statement to the Department, we must receive the faxed statement no later than two weeks before the application deadline date.

Address and mail or fax your statement to: Cassandra Courtney, Fund for the Improvement of Postsecondary Education, U.S. Department of Education, 1990 K Street, NW., room 6166, Washington, DC 20006–8544. Telephone: (202) 502–7506. Fax: (202) 502–7877.

Your paper application must be submitted in accordance with the mail or hand delivery instructions described in this notice.

b. *Submission of Paper Applications by Mail.*

If you qualify for an exception to the electronic submission requirement, you may mail (through the U.S. Postal Service or a commercial carrier) your application to the Department. You must mail the original and two copies of your application, on or before the application deadline date, to the Department at the following address: U.S. Department of Education, Application Control Center, Attention: (CFDA Number 84.938R) LBJ Basement Level 1, 400 Maryland Avenue, SW., Washington, DC 20202–4260.

You must show proof of mailing consisting of one of the following:

(1) A legibly dated U.S. Postal Service postmark.

(2) A legible mail receipt with the date of mailing stamped by the U.S. Postal Service.

(3) A dated shipping label, invoice, or receipt from a commercial carrier.

(4) Any other proof of mailing acceptable to the Secretary of the U.S. Department of Education.

If you mail your application through the U.S. Postal Service, we do not accept either of the following as proof of mailing:

(1) A private metered postmark.

(2) A mail receipt that is not dated by the U.S. Postal Service.

If your application is postmarked after the application deadline date, we will not consider your application.

Note: The U.S. Postal Service does not uniformly provide a dated postmark. Before relying on this method, you should check with your local post office.

c. *Submission of Paper Applications by Hand Delivery.*

If you qualify for an exception to the electronic submission requirement, you (or a courier service) may deliver your paper application to the Department by hand. You must deliver the original and two copies of your application by hand, on or before the application deadline date, to the Department at the following address: U.S. Department of Education, Application Control Center, Attention: (CFDA Number 84.938R) 550 12th Street, SW., Room 7041, Potomac Center Plaza, Washington, DC 20202–4260.

The Application Control Center accepts hand deliveries daily between 8:00 a.m. and 4:30:00 p.m., Washington, DC time, except Saturdays, Sundays, and Federal holidays.

Note for Mail or Hand Delivery of Paper Applications: If you mail or hand deliver your application to the Department—

(1) You must indicate on the envelope and—if not provided by the Department—in Item 11 of the SF 424, the CFDA Number, including suffix letter, if any, of the competition under which you are submitting your application; and

(2) The Application Control Center will mail to you a notification of receipt of your grant application. If you do not receive this notification within 15 business days from the application deadline date, you should call the U.S. Department of Education Application Control Center at (202) 245–6288.

V. Application Review Information

Selection Criteria: The Secretary will award funds to eligible IHEs that submit applications under this program and will allocate funds among the eligible institutions using the following factors as criteria for the distribution of funds:

(1) The expenses that would have been covered by revenues lost by the IHE as a direct result of the major disaster;

(2) The expenses incurred by the IHE in remedying the effects of the disaster; the costs of construction associated with physical damage caused by the disaster; and

(3) Any amount of any insurance settlement or other reimbursement received including from a Federal or other relief agency. After reviewing the pre-applications, the Secretary may decide to use the number or amount of Pell Grants received at any time during the 2006–07 and 2007–08 award years, as reflected in the Department's records, as a factor in determining the amount of the individual grants to ensure a fair distribution of funds in accordance with statutory requirements.

VI. Award Administration Information

1. *Award Notices:* If your application is successful, we notify your U.S. Representative and U.S. Senators, and send you a Grant Award Notification (GAN). We may notify you informally, also.

If your application is not evaluated or not selected for funding, we notify you.

2. *Administrative and National Policy Requirements:* We identify administrative and national policy requirements in the application package and reference these and other requirements in the *Applicable Regulations* section of this notice.

We reference the regulations outlining the terms and conditions of an award in the *Applicable Regulations* section of this notice and include these and other specific conditions in the GAN. The GAN also incorporates your approved application as part of your binding commitments under the grant.

3. *Reporting:* At the end of your project period, you must submit a final performance report, including financial information, as directed by the Secretary. If you receive a multi-year award, you must submit an annual performance report that provides the most current performance and financial expenditure information as directed by the Secretary under 34 CFR 75.118. The Secretary may also require more frequent performance reports under 34 CFR 75.720(c). For specific requirements on reporting, please go to: *http://www.ed.gov/fund/grant/apply/appforms/appforms.html.*

VII. Agency Contact

FOR FURTHER INFORMATION CONTACT: Cassandra Courtney, Fund for the Improvement of Postsecondary Education, U.S. Department of Education, 1990 K Street, NW., room 6166, Washington, DC 20006–8544. Telephone: (202) 502–7506 or by e-mail: HEDR@ed.gov or *Cassandra.Courtney@ed.gov.*

If you use a TDD, call the FRS, toll free, at 1–800–877–8339.

VIII. Other Information

Accessible Format: Individuals with disabilities can obtain this document and a copy of the application package in an accessible format (e.g. Braille, large print, audiotape, or computer diskette) on request to the program contact person listed under **FOR FURTHER INFORMATION CONTACT** in section VII of this notice.

Electronic Access to This Document: You can view this document, as well as all other documents of this Department published in the **Federal Register**, in text or Adobe Portable Document Format (PDF), on the Internet at the following site: *http://www.ed.gov/news/fedregister.*

To use PDF, you must have Adobe Acrobat Reader, which is available free at this site. If you have questions about using PDF, call the U.S. Government Printing Office (GPO), toll free, at 1–888–293–6498; or in the Washington, DC, area at (20) 512–1530.

Note: The official version of this document is the document published in the **Federal Register**. Free Internet access to the official edition of the **Federal Register** and the Code of Federal Regulations is available on GPO Access at: *http://www.gpoaccess.gov/nara/index.html.*

Dated: January 12, 2009.

Vickie L. Schray,

Acting Deputy Assistant Secretary for Higher Education Programs.

[FR Doc. E9–958 Filed 1–15–09; 8:45 am]

BILLING CODE 4000–01–P

DEPARTMENT OF EDUCATION

Privacy Act of 1974; System of Records—Impact Evaluation of Title I Supplemental Educational Services

AGENCY: Institute of Education Sciences, Department of Education.

ACTION: Notice of a new system of records.

SUMMARY: In accordance with the Privacy Act of 1974, as amended (Privacy Act), the Department of Education (Department) publishes this notice of a new system of records entitled ''Impact Evaluation of Title I Supplemental Educational Services.'' The National Center for Education Evaluation and Regional Assistance at the Department's Institute of Education Sciences (IES) commissioned this study to evaluate the effectiveness of Title I Supplemental Educational Services (SES) in improving the reading or mathematics achievement, or both, of students in Title I schools that have failed to make adequate yearly progress for three years.

Section 1116 of the Elementary and Secondary Education Act of 1965, as amended by the No Child Left Behind Act of 2001 (20 U.S.C. 6316), requires districts with Title I schools that fail to make adequate yearly progress for three years or more to offer SES to students from low-income families who attend these schools. SES are tutoring and other supplemental academic enrichment services that are offered in addition to instruction provided during the regular school day and are provided by State-approved providers free of charge to eligible students. Parents can choose the specific SES provider from among a list approved to serve their district. The Department has contracted with Mathematica Policy Research, Inc. to evaluate the impact of SES on student achievement in up to twelve school districts across the country.

The study will address the following questions:

(1) What is the impact of participation in Title I SES on student achievement in reading and mathematics?

(2) Are district characteristics and practices, SES provider characteristics and services, and student characteristics related to the impact on student achievement?

The evaluation will target school districts where Title I SES are oversubscribed. When more students apply for SES than the district is able to serve, under statute, the district must give priority to the lowest-achieving students. The students who apply but do not meet the achievement level criteria are an unbiased comparison group for the students who do participate in SES.

The system will contain information about approximately 50,000 third- to eighth-graders from up to twelve school districts. The system of records will include individually identifying information about the student applicants participating in the evaluation, including names; demographic information such as race, ethnicity, gender, age, and educational background; level of participation in SES programs; and scores on State reading and mathematics achievement tests.

DATES: The Department seeks comment on the new system of records described in this notice, in accordance with the requirements of the Privacy Act. We must receive your comments on the proposed routine uses for the system of records referenced in this notice on or before February 17, 2009.

The Department filed a report describing the new system of records covered by this notice with the Chair of the Senate Committee on Homeland Security and Governmental Affairs, the Chair of the House Committee on Oversight and Government Reform, and the Administrator of the Office of Information and Regulatory Affairs, Office of Management and Budget (OMB) on January 13, 2009. This system of records will become effective at the later date of—(1) the expiration of the 40-day period for OMB review on February 23, 2009 or (2) February 17, 2009, unless the system of records needs to be changed as a result of public comment or OMB review.

ADDRESSES: Address all comments about the proposed routine uses to Dr. Audrey Pendleton, Acting Associate Commissioner, Evaluation Division, National Center for Education Evaluation and Regional Assistance, Institute of Education Sciences, U.S. Department of Education, 555 New Jersey Avenue, NW., room 502E, Washington, DC 20208–0001. Telephone: (202) 208–7085. If you prefer to send comments through the Internet, use the following address: *comments@ed.gov.*

You must include the term ''Impact Evaluation of Supplemental Educational Services'' in the subject line of the electronic message.

During and after the comment period, you may inspect all comments about this notice at the U.S. Department of Education in room 502D, 555 New Jersey Avenue, NW., Washington, DC between the hours of 8:00 a.m. and 4:30 p.m., Eastern time, Monday through Friday of each week except Federal holidays.

Assistance to Individuals With Disabilities in Reviewing the Rulemaking Record

On request, we supply an appropriate aid, such as a reader or print magnifier, to an individual with a disability who needs assistance to review the comments or other documents in the public rulemaking record for this notice. If you want to schedule an appointment for this type of aid, please contact the

person listed under **FOR FURTHER INFORMATION CONTACT**.

FOR FURTHER INFORMATION CONTACT: Dr. Audrey Pendleton. Telephone: (202) 208–7085. If you use a telecommunications device for the deaf (TDD), you may call the Federal Relay Service (FRS) at 1–800–877–8339.

Individuals with disabilities can obtain this document in an alternative format (e.g., Braille, large print, audiotape, or computer diskette) on request to the contact person listed in this paragraph.

SUPPLEMENTARY INFORMATION:

Introduction

The Privacy Act (5 U.S.C. 552a) requires the Department to publish in the **Federal Register** this notice of a new system of records maintained by the Department. The Department's regulations implementing the Privacy Act are contained in part 5b of title 34 of the Code of Federal Regulations (CFR).

The Privacy Act applies to information about individuals that contains individually identifying information and that is retrieved by a unique identifier associated with each individual, such as a name or social security number. The information about each individual is called a ''record,'' and the system, whether manual or computer-based, is called a ''system of records.''

The Privacy Act requires each agency to publish a notice of a system of records in the **Federal Register** and to prepare and send a report to OMB whenever the agency publishes a new system of records. Each agency is also required to send copies of the report to the Chair of the Senate Committee on Homeland Security and Governmental Affairs and the Chair of the House Committee on Oversight and Government Reform. These reports are intended to permit an evaluation of the probable effect of the proposal on the privacy rights of individuals.

Electronic Access to This Document

You may view this document, as well as all other documents of this Department published in the **Federal Register**, in text or Adobe Portable Document Format (PDF) on the Internet at the following site: *http://www.ed.gov/news/fedregister/index.html.*

To use PDF you must have Adobe Acrobat Reader, which is available free at this site. If you have questions about using PDF, call the U.S. Government Printing Office (GPO), toll free, at 1–888–293–6498; or in the Washington, DC, area at (202) 512–1530.

Note: The official version of this document is the document published in the **Federal Register**. Free Internet access to the official edition of the **Federal Register** and the Code of Federal Regulations is available on GPO Access at: *http://www.gpoaccess.gov/nara/index.html.*

Dated: January 13, 2009.

Sue Betka,

Acting Director, Institute of Education Sciences.

For the reasons discussed in the preamble, the Director of the Institute of Education Sciences, U.S. Department of Education, publishes a notice of a new system of records to read as follows:

18–13–20

SYSTEM NAME:

Impact Evaluation of Title I Supplemental Educational Services.

SECURITY CLASSIFICATION:

None.

SYSTEM LOCATION:

(1) Evaluation Division, National Center for Education Evaluation and Regional Assistance, Institute of Education Sciences (IES), U.S. Department of Education, 555 New Jersey Avenue, NW., room 502E, Washington, DC 20208–0001.

(2) Mathematica Policy Research, Inc., 600 Alexander Park, Princeton, NJ 08540–2393 and 955 Massachusetts Avenue, Suite 801, Cambridge, MA 02139–3226.

CATEGORIES OF INDIVIDUALS COVERED BY THE SYSTEM:

This system contains records on third- to eighth-grade students who are participating in an evaluation of the effectiveness of Title I Supplemental Educational Services (SES). Parents will apply to their school districts for their child to participate in SES. For students whose parents apply for them to participate in SES, the districts will provide to the Department's contractor demographic data, data on student achievement, and will report on whether or not students were selected to participate in SES. SES providers will provide information to the Department's contractor on the services provided to students.

The system will contain information about approximately 50,000 third- to eighth-graders. In up to twelve school districts, approximately 50,000 students are expected to apply to participate in Title I SES provided by the district, private providers, or both.

CATEGORIES OF RECORDS IN THE SYSTEM:

The system of records will include individually identifying information about the student applicants participating in the evaluation, including names; demographic information such as race, ethnicity, gender, age, and educational background; level of participation in SES programs; scores on State reading or mathematics achievement tests, or both; and, for each student participating in SES, the name and characteristics of SES provider organizations such as type of provider (district, private for profit, non-profit, community-based organization), location (at student's school or not at student's school), delivery method (teacher, technology, distance learning), and delivery group size (one-on-one, small group, large group).

AUTHORITY FOR MAINTENANCE OF THE SYSTEM:

The evaluation is authorized under section 1501(a)(2) of the Elementary and Secondary Education Act of 1965, as amended by the No Child Left Behind Act of 2001 (20 U.S.C. 6491(a)(2)), as well as sections 171(b) and 173 of the Education Sciences Reform Act of 2002 (ESRA) (20 U.S.C. 9561(b) and 9563).

PURPOSE(S):

The information in this system is used for the following purpose: To evaluate the effectiveness of Title I SES in improving the reading or mathematics achievement, or both, of students in Title I schools that have failed to make adequate yearly progress for three years.

ROUTINE USES OF RECORDS MAINTAINED IN THE SYSTEM, INCLUDING CATEGORIES OF USERS AND THE PURPOSES OF SUCH USES:

The Department of Education (Department) may disclose information contained in a record in this system of records under the routine uses listed in this system of records without the consent of the individual if the disclosure is compatible with the purposes for which the record was collected. These disclosures may be made on a case-by-case basis or, if the Department has complied with the computer matching requirements of the Privacy Act, under a computer matching agreement. Any disclosure of individually identifiable information from a record in this system must also comply with the requirements of section 183 of the ESRA (20 U.S.C. 9573) providing for confidentiality standards that apply to all collections, reporting, and publication of data by IES.

Contract Disclosure. If the Department contracts with an entity for the purposes of performing any function that requires disclosure of records in this system to employees of the contractor, the Department may disclose the records to

those employees. Before entering into such a contract, the Department will require the contractor to maintain Privacy Act safeguards as required under 5 U.S.C. 552a(m) with respect to the records in the system.

DISCLOSURE TO CONSUMER REPORTING AGENCIES:

Not applicable to this system notice.

POLICIES AND PRACTICES FOR STORING, RETRIEVING, ACCESSING, RETAINING, AND DISPOSING OF RECORDS IN THE SYSTEM:

STORAGE:

The Department maintains records on CD–ROM, and the contractor (Mathematica Policy Research, Inc.) maintains data for this system on computers and in hard copy.

RETRIEVABILITY:

Records in this system are indexed and retrieved by a number assigned to each individual that is cross-referenced by the individual's name on a separate list.

SAFEGUARDS:

All physical access to the Department's site and to the sites of the Department's contractor where this system of records is maintained is controlled and monitored by security personnel. The computer system employed by the Department offers a high degree of resistance to tampering and circumvention. This security system limits data access to Department and contract staff on a need-to-know basis, and controls individual users' ability to access and alter records within the system. The contractor will establish similar sets of procedures at its sites to ensure confidentiality of data. The contractor's system is required to ensure that information identifying individuals is in files physically separated from other research data. The contractor will maintain security of the complete set of all master data files and documentation. Access to individually identifying data will be strictly controlled. At each contractor site, all data will be kept in locked file cabinets during nonworking hours, and work on hardcopy data will take place in a single room, except for data entry. Physical and cyber security of electronic data will also be maintained. Security features that protect project data include: Password-protected accounts that authorize users to use the contractor's systems but to access only specific network directories and network software; user rights and directory and file attributes that limit those who can use particular directories and files and determine how they can use them; and additional security features that the network administrators will establish for projects as needed. The contractor employees who ''maintain'' (collect, maintain, use, or disseminate) data in this system must comply with the requirements of the confidentiality standards in section 183 of the ESRA (20 U.S.C. 9573).

RETENTION AND DISPOSAL:

Records are maintained and disposed of in accordance with the Department's Records Disposition Schedules (ED/RDS, Part 3, Item 2b and Part 3, Items 4b and 5a).

SYSTEM MANAGER AND ADDRESS:

Acting Associate Commissioner, Evaluation Division, National Center for Education Evaluation and Regional Assistance, Institute of Education Sciences, U.S. Department of Education, 555 New Jersey Avenue, NW., room 502E, Washington, DC 20208.

NOTIFICATION PROCEDURE:

If you wish to determine whether a record exists regarding you in the system of records, contact the systems manager. Your request must meet the requirements of the regulations in 34 CFR 5b.5, including proof of identity.

RECORD ACCESS PROCEDURE:

If you wish to gain access to your record in the system of records, contact the system manager. Your request must meet the requirements of the regulations in 34 CFR 5b.5, including proof of identity.

CONTESTING RECORD PROCEDURE:

If you wish to contest the content of a record regarding you in the system of records, contact the system manager. Your request must meet the requirements of the regulations in 34 CFR 5b.7, including proof of identity.

RECORD SOURCE CATEGORIES:

The system of records will include individually identifying information collected from school districts on third- to eighth graders applying to participate in Title I SES and the SES provider organization for each student participating in SES. Data collected will include information about the student applicants participating in the evaluation, including names; demographic information such as race, ethnicity, gender, age, and educational background; level of participation in SES programs; scores on State reading or mathematics achievement tests, or both; and, for each student participating in SES, the name and characteristics of SES provider organizations such as type of provider (district, private for profit, non-profit, community-based organization), location (at student's school or not at student's school), delivery method (teacher, technology, distance learning), and delivery group size (one-on-one, small group, large group).

EXEMPTIONS CLAIMED FOR THE SYSTEM:

None.

[FR Doc. E9–972 Filed 1–15–09; 8:45 am]

BILLING CODE 4000–01–P

DEPARTMENT OF ENERGY

Environmental Management Site-Specific Advisory Board, Hanford

AGENCY: Department of Energy.

ACTION: Notice of open meeting.

SUMMARY: This notice announces a meeting of the Environmental Management Site-Specific Advisory Board (EM SSAB), Hanford. The Federal Advisory Committee Act (Pub. L. 92–463, 86 Stat. 770) requires that public notice of this meeting be announced in the **Federal Register**.

DATES: Thursday, February 5, 2009, 9 a.m.–5 p.m. Friday, February 6, 2009, 8:30 a.m.–4 p.m.

ADDRESSES: Red Lion Hotel, 1101 North Columbia Center Boulevard, Kennewick, Washington 99336, Phone: (509) 783–0611 or 1–800–733–5466, Fax: (509) 374–0391.

FOR FURTHER INFORMATION CONTACT: Paula Call, Federal Coordinator, Department of Energy Richland Operations Office, 825 Jadwin Avenue, P.O. Box 550, A7–75, Richland, WA 99352; Phone: (509) 376–2048; or E-mail: *Paula_K_Call@rl.gov*.

SUPPLEMENTARY INFORMATION:

Purpose of the Board: The purpose of the Board is to make recommendations to DOE in the areas of environmental restoration, waste management, and related activities.

Tentative Agenda:

- Agency Updates (Department of Energy Office of River Protection and Richland Operations Office; Washington State Department of Ecology; and the U.S. Environmental Protection Agency)
- Committee Updates, including: Tank Waste Committee; River and Plateau Committee; Health, Safety and Environmental Protection Committee; Public Involvement Committee; and Budgets and Contracts Committee
- Hanford Advisory Board Principles on Institutional Controls and Long-Term Stewardship
- Public Involvement: Tank Closure and Waste Management Environmental Impact Statement

- Baselines and Integrated Priority Lists
- Plutonium Toxicity Tutorial
- Issue Manager Training
- New Board Member Orientation
- Questions for the New Administration

Public Participation: The meeting is open to the public. The EM SSAB, Hanford, welcomes the attendance of the public at its advisory committee meetings and will make every effort to accommodate persons with physical disabilities or special needs. If you require special accommodations due to a disability, please contact Paula Call at least seven days in advance of the meeting at the phone number listed above. Written statements may be filed with the Board either before or after the meeting. Individuals who wish to make oral statements pertaining to agenda items should contact Paula Call at the address or telephone number listed above. Requests must be received five days prior to the meeting and reasonable provision will be made to include the presentation in the agenda. The Deputy Designated Federal Officer is empowered to conduct the meeting in a fashion that will facilitate the orderly conduct of business. Individuals wishing to make public comment will be provided a maximum of five minutes to present their comments.

Minutes: Minutes will be available by writing or calling Paula Call's office at the address or phone number listed above. Minutes will also be available at the following Web site: *http://www.hanford.gov/?page=413&parent=397*.

Issued at Washington, DC on January 12, 2009.

Rachel Samuel,

Deputy Committee Management Officer.

[FR Doc. E9–893 Filed 1–15–09; 8:45 am]

BILLING CODE 6450–01–P

DEPARTMENT OF ENERGY

Environmental Management Site-Specific Advisory Board, Portsmouth

AGENCY: Department of Energy (DOE).

ACTION: Notice of open meeting.

SUMMARY: This notice announces a meeting of the Environmental Management Site-Specific Advisory Board (EM SSAB), Portsmouth. The Federal Advisory Committee Act (Pub. L. No. 92–463, 86 Stat. 770) requires that public notice of this meeting be announced in the **Federal Register**.

DATES: Thursday, February 5, 2009, 6 p.m.

ADDRESSES: Ohio State University, Endeavor Center, 1862 Shyville Road, Piketon, Ohio 45661.

FOR FURTHER INFORMATION CONTACT: David Kozlowski, Deputy Designated Federal Officer, Department of Energy Portsmouth/Paducah Project Office, Post Office Box 700, Piketon, Ohio 45661, (740) 897–2759, *David.Kozlowski@lex.doe.gov.*

SUPPLEMENTARY INFORMATION:

Purpose of the Board: The purpose of the Board is to make recommendations to DOE in the areas of environmental restoration, waste management and related activities.

Tentative Agenda:

- Call to Order, Introductions, Review of Agenda
- Deputy Designated Federal Officer's Comments
- Federal Coordinator's Comments
- Liaisons' Comments
- Presentations
- Administrative Issues—Actions:
  - Committee Updates
  - Motions
- Public Comments
- Final Comments
- Adjourn

Breaks taken as appropriate.

Public Participation: The meeting is open to the public. The EM SSAB, Portsmouth, welcomes the attendance of the public at its advisory committee meetings and will make every effort to accommodate persons with physical disabilities or special needs. If you require special accommodations due to a disability, please contact David Kozlowski at least seven days in advance of the meeting at the phone number listed above. Written statements may be filed with the Board either before or after the meeting. Individuals who wish to make oral statements pertaining to agenda items should contact David Kozlowski at the address or telephone number listed above. Requests must be received five days prior to the meeting and reasonable provision will be made to include the presentation in the agenda. The Deputy Designated Federal Officer is empowered to conduct the meeting in a fashion that will facilitate the orderly conduct of business. Individuals wishing to make public comment will be provided a maximum of five minutes to present their comments.

Minutes: Minutes will be available by writing or calling David Kozlowski at the address and phone number listed above. Minutes will also be available at the following Web site: *http://www.ports-ssab.org/publicmeetings.html.*

Issued at Washington, DC on January 13, 2009.

Rachel Samuel,

Deputy Committee Management Officer.

[FR Doc. E9–896 Filed 1–15–09; 8:45 am]

BILLING CODE 6450–01–P

DEPARTMENT OF ENERGY

Notice of Availability: Office of Civilian Radioactive Waste Management; National Transportation Plan, Revision 0

AGENCY: Department of Energy.

ACTION: Notice of availability.

SUMMARY: The Department of Energy's (DOE's) Office of Civilian Radioactive Waste Management (OCRWM) is making available its *National Transportation Plan, Revision 0* (DOE/RW–0603, January 2009) for public review and comment. The *National Transportation Plan* outlines OCRWM's current strategy and planning for developing and implementing the transportation system that will be required to transport spent nuclear fuel (SNF) and high-level radioactive waste (HLW) from where the material is generated or stored to the proposed repository at Yucca Mountain, Nevada. OCRWM does not expect actual shipments to begin before 2020, but has started the transportation planning process well in advance to ensure the concerns and input of State, Tribal and local officials, as well as other involved and interested parties, are taken into account. OCRWM's *National Transportation Plan* will be updated as appropriate to accommodate changes to the waste management system, reflect progress in the development and implementation of the transportation system, and incorporate stakeholder and public comments. OCRWM also anticipates that detailed implementation plans will be developed in collaboration with the stakeholder community.

DATES: Interested persons are invited to submit comments on or before April 30, 2009.

ADDRESSES: The document is being made available on the OCRWM Web site at *http://www.ocrwm.doe.gov*. Persons wishing to receive a print copy via regular mail should contact: Mr. Frank Moussa, U.S. Department of Energy, OCRWM Office of Logistics Management, 1000 Independence Avenue, SW., Washington, DC 20585–0001. Written comments should be submitted electronically via the Web at *http://www.ocrwm.doe.gov*, or by regular mail to Mr. Frank Moussa at the address identified above.

SUPPLEMENTARY INFORMATION: The Nuclear Waste Policy Act of 1982, as amended (NWPA) establishes a process for the siting, construction and operation of one or more national repositories for permanent disposal of the Nation's SNF and HLW. Pursuant to the NWPA, Yucca Mountain has been designated as the site for the Nation's first SNF and HLW repository, and DOE has submitted an application to the Nuclear Regulatory Commission (NRC) for approval to construct the repository. As part of its obligations under the NWPA, DOE is also responsible for developing and implementing a system to transport SNF and HLW to the Yucca Mountain repository.

OCRWM's *National Transportation Plan, Revision 0* describes the elements of the national transportation system that OCRWM is developing, the phases of that development effort, and how OCRWM will collaborate with stakeholders in the development and implementation of that system. This Plan describes the transportation system that will be needed when the repository is operating at full capacity. The transportation system will be developed in stages that are consistent with waste acceptance schedules and the start-up and subsequent operation of the repository. The transportation infrastructure will continue to expand until full operating capability is achieved. The development and operations of the OCRWM transportation system will build on many decades of safe and secure transportation of SNF in the United States and abroad.

This Plan will be updated as appropriate to reflect progress in the development and implementation of the transportation system, accommodate changes to the waste management system, and incorporate stakeholder and public comments. OCRWM also anticipates that detailed implementation plans will be developed in the future in collaboration with the stakeholder community.

Issued in Washington, DC, on January 12, 2009.

Edward F. Sproat III,

Director, Office of Civilian Radioactive Waste Management, U.S. Department of Energy.

[FR Doc. E9–894 Filed 1–15–09; 8:45 am]

BILLING CODE 6450–01–P

DEPARTMENT OF ENERGY

Southwestern Power Administration

Integrated System Rate Schedules

AGENCY: Southwestern Power Administration, DOE.

ACTION: Notice of rate order.

SUMMARY: Pursuant to Delegation Order Nos. 00–037.00, effective December 6, 2001, and 00–001.00C, effective January 31, 2007, the Deputy Secretary has approved and placed into effect on an interim basis Rate Order No. SWPA–61, which provides the following Integrated System Rate Schedules:

Rate Schedule P–06A, Wholesale Rates for Hydro Peaking Power.

Rate Schedule NFTS–06A, Wholesale Rates for Non-Federal Transmission Service.

FOR FURTHER INFORMATION CONTACT: Mr. James K. McDonald, Assistant Administrator, Office of Corporate Operations, Southwestern Power Administration, Department of Energy, One West Third Street, Tulsa, Oklahoma 74103, (918) 595–6690, *jim.mcdonald@swpa.gov.*

SUPPLEMENTARY INFORMATION: The 2008 Power Repayment Studies indicated that rates prescribed by Rate Schedules P–06, Wholesale Rates for Hydro Peaking Power, and NFTS–06, Wholesale Rates for Non-Federal Transmission Service, as approved in Docket No. EF07–4011–000, for the period October 1, 2006, through September 30, 2010, are sufficient to meet repayment criteria and do not require any adjustment. However, it is necessary to make technical, non-revenue impacting changes to the terms and conditions of both rates. The Real Power Losses provisions in rate schedules P–06 and NFTS–06 were revised to specify that all real power losses associated with deliveries of non-Federal energy transmitted by Southwestern on behalf of transmission customers must be scheduled and delivered (self-supplied) to Southwestern by such customers during the second month after such real power losses were incurred by Southwestern. Prior to these new provisions, transmission customers were provided the option to either purchase losses from Southwestern or elect, on an annual basis, to self-provide their respective loss energy subject to certain conditions. These new provisions incorporate comments received by Southwestern during customer meetings held throughout 2008. As a result of these informal meetings, it was determined that the revised rate schedule provisions can provide cost-savings to Southwestern's transmission customers, operational benefits to Southwestern, and are consistent with Federal Energy Regulatory Commission (FERC) Order No. 888.

Rate Schedule P–06A applies to wholesale customers purchasing hydro peaking power and peaking energy from the Integrated System. This rate schedule is designed for the sale of Federal power and energy. Rate Schedule NFTS–06A applies to wholesale customers purchasing Non-Federal Point-to-Point and Network Transmission Service. In developing the revised real power losses rate schedules provisions, the title of the P–06 and NFTS–06 rate schedules were changed to P–06A and NFTS–06A respectively, to reflect the fact that revisions have been made. In addition to replacing the section entitled ''Rates for Real Power Losses'' within the rate schedules, minor corrections and modifications were incorporated to clarify and update any sections of the rate schedules containing references to real power losses. These changes will have no impact on the amortization or status of repayment forecasted in the power repayment studies and will not require rate changes. Revenues based on current rates remain sufficient to meet repayment criteria.

The Administrator, Southwestern Power Administration (Southwestern) has followed Title 10, Part 903, Subpart A of the Code of Federal Regulations, ''Procedures for Public Participation in Power and Transmission Rate Adjustments and Extensions,'' in connection with the rate schedule revisions being proposed. The public was advised by notice published in the **Federal Register** (73 FR 63969), October 28, 2008, of proposed rate schedule changes and of the opportunity to provide written comments for a period of 30 days ending November 28, 2008. Accordingly, several informal meetings were held with customers and interested parties to discuss the proposed changes. No comments were received during the period of public participation related to the proposed rate schedule changes.

Following review of Southwestern's proposal within the Department of Energy, I approved Rate Order No. SWPA–61 on an interim basis for the period January 1, 2009, through September 30, 2010, or until confirmed and approved on a final basis by the Federal Energy Regulatory Commission.

Dated: January 8, 2009.

Jeffrey F. Kupfer,

Deputy Secretary.

United States of America, Department of Energy, Deputy Secretary.

In the Matter of: Southwestern Power Administration Integrated System Rate Schedules; Order Confirming, Approving and Placing Revised Power Rate Schedules in Effect On an Interim Basis

Rate Order No. SWPA–61

Pursuant to Sections 302(a) and 301(b) of the Department of Energy Organization Act, Public Law 95–91, the functions of the Secretary of the Interior and the Federal Power Commission under Section 5 of the Flood Control Act of 1944, 16 U.S.C. 825s, relating to the Southwestern Power Administration (Southwestern) were transferred to and vested in the Secretary of Energy. By Delegation Order No. 0204–108, effective December 14, 1983, the Secretary of Energy delegated to the Administrator of Southwestern the authority to develop power and transmission rates, delegated to the Deputy Secretary of the Department of Energy the authority to confirm, approve, and place in effect such rates on an interim basis and delegated to the Federal Energy Regulatory Commission the authority to confirm and approve on a final basis or to disapprove rates developed by the Administrator under the delegation. Delegation Order No. 0204–108, as amended, was rescinded and subsequently replaced by Delegation Orders 00–037.00 (December 6, 2001) and 00–001–00C (January 31, 2007). The Deputy Secretary issued this rate order pursuant to said delegations.

Background

In May 2008, Southwestern Power Administration (Southwestern) completed its review of the adequacy of the current rate schedules for the Integrated System and finalized its 2008 Power Repayment Studies (PRSs). The studies indicated that the proposed rates as shown in Rate Schedules P–06 and NFTS–06 would meet cost recovery criteria for the Integrated System projects. The Federal Energy Regulatory Commission (FERC) confirmation and approval of the following Integrated System (System) rate schedules was provided in FERC Docket No. EF07–4011–000 (118 FERC ¶ 62, 162) issued February 27, 2007, for the period October 1, 2006, through September 30, 2010:

Rate Schedule P–06, Wholesale Rates for Hydro Peaking Power.

Rate Schedule NFTS–06, Wholesale Rates for Point-to-Point and Network Transmission Service.

Rate Schedule EE–06, Wholesale Rate for Excess Energy.

Based on operations under the approved Rate Schedules, the Administrator, Southwestern, has determined that a revision to the Real Power Losses provision within existing rate schedules P–06 and NFTS–06 is required. Since the proposed changes to the rate schedules are associated with Real Power Losses, the net results of the 2008 Integrated System Power Repayment Studies, which was the basis for the existing rate schedules, will not be altered. The designations of the aforementioned rate schedules have been revised from P–06 and NFTS–06 to P–06A and NFTS–06A to reflect the fact that revisions have been made.

Titles 10, Part 903 Subpart A, of the Code of Federal Regulations, ''Procedures for Public Participation in Power and Transmission Rate Adjustments and Extensions'' (Part 903) have been followed in connection with the proposed Rate Schedules P–06A and NFTS–06A. An opportunity for customers and other interested members of the public to review and comment on the proposed rate schedules was announced by notice published in the **Federal Register** October 28, 2008 (73 FR 63969), with written comments due by November 28, 2008. In addition, Southwestern held informal meetings with customers to discuss proposed changes and to provide opportunity for input in the development of these changes. No comments were received during the period of public participation related to the proposed rate schedule changes.

Discussion

Rate Schedule P–06A applies to wholesale customers purchasing hydro peaking power and peaking energy from the Integrated System. This rate schedule is designed for the sale of Federal power and energy. Rate Schedule NFTS–06A applies to wholesale customers purchasing Non-Federal Point-to-Point and Network Transmission Service. In addition to replacing the section entitled ''Rates for Real Power Losses'' within the rate schedules, minor corrections and modifications were incorporated to clarify and update any sections of the rate schedules containing references to real power losses. These changes will have no impact on the amortization or status of repayment forecasted in the power repayment studies and will not require rate changes. Revenues based on current rates remain sufficient to meet repayment criteria.

For the period January 1, 2009, through September 30, 2010, Southwestern's P–06A and NFTS–06A rate schedules will require that all real power losses associated with deliveries of non-Federal energy transmitted by Southwestern must be scheduled and delivered (self-supplied) to Southwestern by customers during the second month after such real power losses were incurred by Southwestern. Southwestern will determine the amount of real power losses associated with non-Federal energy transmitted on behalf of each customer in the manner specified in the rate schedules and provide a written schedule setting forth the delivery rate and total quantity of real power loss energy to be delivered back to Southwestern. Should a customer fail to return the total quantity of real power loss energy to Southwestern, according to the schedule provided during the month in which such loss energy is due, the customer will be invoiced and obligated to purchase, at the rate stipulated in the P–06A and NFTS–06A rate schedules, the quantity of loss energy the customer failed to return to Southwestern.

Availability of Information

Information regarding these rate schedules changes is available for public review and comment in the offices of Southwestern Power Administration, One West Third Street, Tulsa, Oklahoma 74103.

Comments and Responses

Southwestern received no comments during the period of public participation related to the proposed rate schedule changes.

Other Issues

There were no other issues raised during the informal meetings or during the formal public participation period.

Administrator's Certification

The revised rate schedules will repay all costs of the Integrated System including amortization of the power investment consistent with the provisions of Department of Energy Order No. RA 6120.2. In accordance with Delegation Order Nos. 00–037.00, effective December 6, 2001, and 00–001.00C, effective January 31, 2007, and Section 5 of the Flood Control Act of 1944, the Administrator has determined that the proposed Integrated System rate schedules are consistent with applicable law and the lowest possible rates consistent with sound business principles.

Environment

No additional evaluation of the environmental impact of the proposed rate schedule changes was conducted since no change has been made to the currently-approved System rates which were determined to fall within the class of actions that are categorically excluded from the requirements of preparing either an Environmental Impact Statement or an Environmental Assessment.

Order

In view of the foregoing and pursuant to the authority delegated to me by the Secretary of Energy, I hereby confirm, approve and place in effect on an interim basis, effective January 1, 2009, the Southwestern Integrated System Rate Schedules P–06A and NFTS–06A which shall remain in effect on an interim basis through September 30, 2010, or until the FERC confirms and approves the rates on a final basis.

Dated: January 8, 2009.

Jeffrey F. Kupfer,

Deputy Secretary.

[FR Doc. E9–895 Filed 1–15–09; 8:45 am]

BILLING CODE 6450–01–P

DEPARTMENT OF ENERGY

Western Area Power Administration

Loveland Area Projects—Rate Order No. WAPA–142

AGENCY: Western Area Power Administration, DOE.

ACTION: Notice of order concerning firm electric rates.

SUMMARY: The Acting Deputy Secretary of Energy has confirmed and approved Rate Order No. WAPA–142 and Rate Schedule L–F8, placing firm electric service rates from the Loveland Area Projects (LAP) of the Western Area Power Administration (Western) into effect on an interim basis. The Provisional Rates will be in effect until the Federal Energy Regulatory Commission (FERC) confirms, approves, and places them into effect on a final basis or until they are replaced by other rates. The Provisional Rates will provide sufficient revenue to pay all annual costs, including interest expense, and repayment of power investment and irrigation aid within the allowable periods.

DATES: Rate Schedule L–F8 will be placed into effect on an interim basis on the first day of the first full billing period beginning on or after February 1, 2009, and will remain in effect until FERC confirms, approves, and places the rate schedule in effect on a final basis ending December 31, 2013, or until the rate schedule is superseded.

FOR FURTHER INFORMATION CONTACT: Mr. James D. Keselburg, Regional Manager, Rocky Mountain Customer Service Region, Western Area Power Administration, 5555 East Crossroads Boulevard, Loveland, CO 80538–8986, telephone (970) 461–7201, or Mrs. Sheila D. Cook, Rates Manager, Rocky Mountain Customer Service Region, Western Area Power Administration, 5555 East Crossroads Boulevard, Loveland, CO 80538–8986, telephone (970) 461–7211, e-mail *scook@wapa.gov.*

SUPPLEMENTARY INFORMATION: The Deputy Secretary of Energy approved existing Rate Schedule L-F7 for firm electric service on an interim basis on November 1, 2007 (72 FR. 64061, November 14, 2007), for a 5-year period beginning on January 1, 2008, and ending December 31, 2012.[1]

The LAP firm electric service rates must be increased due to the economic impacts of the ongoing drought. The drought is causing a decrease in hydro-power generation, leading to an increase in purchase power expenses and a decrease in revenue from non-firm energy sales.

Rate Schedule L–F7 is being superseded by Rate Schedule L–F8. Under Rate Schedule L–F7, the composite rate is 32.42 mills per kilowatthour (mills/kWh), the firm energy rate is 16.21 mills/kWh, and the firm capacity rate is $4.25 per kilowattmonth (kWmonth). Under Rate Schedule L–F8, the Provisional Rates for firm electric service will result in a combined composite rate of 37.24 mills/kWh. The firm energy rate will be 18.62 mills/kWh (a Base component of 12.23 mills/kWh and a Drought Adder component of 6.39 mills/kWh) and the capacity rate will be $4.88/kWmonth (a Base component of $3.21/kWmonth and a Drought Adder component of $1.67/kWmonth). This is a 14.9 percent increase when compared to the LAP firm electric rates under Rate Schedule L–F7.

By Delegation Order No. 00–037.00, effective December 6, 2001, the Secretary of Energy delegated: (1) The authority to develop power and transmission rates to the Administrator of Western; (2) the authority to confirm, approve, and place such rates into effect on an interim basis to the Deputy Secretary of Energy; and (3) the authority to confirm, approve, and place into effect on a final basis, to remand, or to disapprove such rates to FERC. Existing Department of Energy procedures for public participation in power rate adjustments (10 CFR part 903) were published on September 18, 1985.

Under Delegation Order Nos. 00–037.00 and 00–001.00C, 10 CFR part 903, and 18 CFR part 300, I hereby confirm, approve, and place Rate Order No. WAPA–142, the proposed LAP firm electric service rates, into effect on an interim basis.

The new Rate Schedule L–F8 will be promptly submitted to FERC for confirmation and approval on a final basis.

Jeffrey F. Kupfer,

Acting Deputy Secretary of Energy.

Department of Energy Deputy Secretary

In the matter of: Western Area Power Administration, Rate Adjustment for the, Loveland Area Projects; Rate Order No. WAPA–142; Order Confirming, Approving, and Placing the Loveland Area Projects Firm Electric Service Rates Into Effect on an Interim Basis

These rates for the Loveland Area Projects were established in accordance with section 302 of the Department of Energy (DOE) Organization Act (42 U.S.C. 7152). This Act transferred to and vested in the Secretary of Energy the power marketing functions of the Secretary of the Department of the Interior and the Bureau of Reclamation under the Reclamation Act of 1902 (ch. 1093, 32 Stat. 388), as amended and supplemented by subsequent laws, particularly section (c) of the Reclamation Project Act of 1939 (43 U.S.C. 485h(c)) and section 5 of the Flood Control Act of 1944 (16 U.S.C. 825s); and other acts that specifically apply to the project involved.

By Delegation Order No. 00–037.00, effective December 6, 2001, the Secretary of Energy delegated: (1) The authority to develop power and transmission rates to the Administrator of Western; (2) the authority to confirm, approve, and place such rates into effect on an interim basis to the Deputy Secretary of Energy; and (3) the authority to confirm, approve, and place into effect on a final basis, to remand or to disapprove such rates to the Federal Energy Regulatory Commission. Existing DOE procedures for public participation in power rate adjustments (10 CFR part 903) were published on September 18, 1985.

[1] FERC confirmed and approved Rate Order WAPA–134 on May 16, 2008, in Docket No. EF08–5181. See *United States Department of Energy, Western Area Power Administration, Loveland Area Projects,* 123 FERC ¶ 62,137 (May 16, 2008).

Acronyms and Definitions

As used in this Rate Order, the following acronyms and definitions apply:

Administrator: The Administrator of the Western Area Power Administration.

Base: Revenue requirement component of the firm electric service rate including annual operation and maintenance expenses, investment repayment and associated interest, normal timing power purchases, and transmission costs.

Capacity: The electric capability of a generator, transformer, transmission circuit, or other equipment. It is expressed in kilowatts.

Capacity Rate: The rate which sets forth the charges for capacity. It is expressed in dollars per kilowattmonth.

Composite Rate: The rate for commercial firm power which is the total annual revenue requirement for capacity and energy divided by the total annual energy sales. It is expressed in mills per kilowatthour and used for comparison purposes.

Corps: United States Army Corps of Engineers.

Criteria: The Post-1989 General Power Marketing and Allocation Criteria for the sale of energy with capacity from the Pick-Sloan Missouri Basin Program—Western Division and the Fryingpan-Arkansas Project.

Customer: An entity with a contract that is receiving service from Western's Rocky Mountain Region.

Deficits: Deferred or unrecovered annual and/or interest expenses.

DOE: United States Department of Energy.

DOE Order RA 6120.2: An order outlining power marketing administration financial reporting and rate-making procedures.

Drought Adder: Formula-based revenue requirement component including costs associated with the drought.

Energy: Measured in terms of the work it is capable of doing over a period of time. It is expressed in kilowatthours.

Energy Rate: The rate which sets forth the charges for energy. It is expressed in mills per kilowatthour and applied to each kilowatthour delivered to each customer.

FERC: The Federal Energy Regulatory Commission.

Firm: A type of product and/or service available at the time requested by the customer.

FRN: **Federal Register** notice.

Fry-Ark: Fryingpan-Arkansas Project.

FY: Fiscal year; October 1 to September 30.

kW: Kilowatt—the electrical unit of capacity that equals 1,000 watts.

kWh: Kilowatthour—the electrical unit of energy that equals 1,000 watts in 1 hour.

kWmonth: Kilowattmonth—the electrical unit of the monthly amount of capacity.

LAP: Loveland Area Projects.

L–F7: Loveland Area Projects existing firm electric service rate schedule (expires December 31, 2012, or until superseded).

L–F8: Loveland Area Projects provisional firm electric service rate schedule to be effective February 1, 2009 (to expire December 31, 2013, or when superseded).

M&I: Municipal and industrial water development.

mills/kWh: Mills per kilowatthour—the unit of charge for energy (equal to one tenth of a cent or one thousandth of a dollar).

MW: Megawatt—the electrical unit of capacity that equals 1 million watts or 1,000 kilowatts.

MISO: Midwest Independent Transmission System Operator.

NEPA: National Environmental Policy Act of 1969 (42 U.S.C. 4321, *et seq.*).

Non-timing Power Purchases: Power purchases that are not related to operational constraints such as management of endangered species, species habitat, water quality, navigation, and control area purposes.

O&M: Operation and Maintenance.

P–SMBP: The Pick-Sloan Missouri Basin Program.

P–SMBP—ED: Pick-Sloan Missouri Basin Program—Eastern Division.

P–SMBP—WD: Pick-Sloan Missouri Basin Program—Western Division.

Power: Capacity and energy.

Power Factor: The ratio of real to apparent power at any given point and time in an electrical circuit. Generally it is expressed as a percentage ratio.

Preference: The provisions of Reclamation Law which require Western to first make Federal power available to certain entities. For example, section 9(c) of the Reclamation Project Act of 1939 (43 U.S.C. 485h(c)) states that preference in the sale of Federal power shall be given to municipalities and other public corporations or agencies and also to cooperatives and other nonprofit organizations financed in whole or in part by loans made under the Rural Electrification Act of 1936.

Provisional Rate: A rate which has been confirmed, approved and placed into effect on an interim basis by the Acting Deputy Secretary.

PRS: Power Repayment Study.

Rate Brochure: An August 2008 document explaining the rationale and background for the rate proposal contained in this Rate Order.

Ratesetting PRS: The PRS used for the rate adjustment period.

Reclamation: United States Department of the Interior, Bureau of Reclamation.

Reclamation Law: A series of Federal laws. Viewed as a whole, these laws create the originating framework under which Western markets power.

Regions: Western's Rocky Mountain Region and Upper Great Plains Region.

Revenue Requirement: The revenue required to recover annual expenses (such as O&M, purchase power, transmission service expenses, interest and deferred expenses) and repay Federal investments and other assigned costs.

Rocky Mountain Region: The Rocky Mountain Customer Service Region of Western Area Power Administration.

SPP: Southwest Power Pool.

Timing Power Purchases: Power purchases that are due to operational constraints (*e.g.,* management of endangered species, species habitat, water quality, navigation, control area purposes, etc.) not associated with the drought.

Upper Great Plains Region: The Upper Great Plains Customer Service Region of Western Area Power Administration.

Western: United States Department of Energy, Western Area Power Administration.

Effective Date

The Provisional Rates will take effect on the first day of the first full billing period beginning on or after February 1, 2009, and will remain in effect until December 31, 2013, pending approval by FERC on a final basis.

Public Notice and Comment

Western followed the Procedures for Public Participation in Power and Transmission Rate Adjustments and Extensions, 10 CFR part 903, in developing these rates. The steps Western took to involve interested parties in the rate process were:

1. The proposed rate adjustment process began April 9, 2008, when Western's Rocky Mountain Region mailed a notice announcing informal meetings to all LAP preference customers and interested parties. The informal meetings were held on April 29, 2008, in Denver, Colorado, and on April 30, 2008, in Sioux Falls, South Dakota. At these informal meetings, Western explained the rationale for the rate adjustment, presented rate designs and methodologies, and answered questions.

2. A **Federal Register** was published on August 15, 2008 (73 FR 47942), which announced the proposed rates for LAP, began the public consultation and comment period, and announced the public information and public comment forums.

3. On August 22, 2008, Western mailed letters to all LAP preference customers and interested parties transmitting the FRN published on August 15, 2008.

4. On September 9, 2008, beginning at 9 a.m. (MDT), Western held a public information forum at the Ramada Plaza Hotel in Northglenn, Colorado. Western provided updates to the proposed firm electric service rates for LAP and P–SMBP—ED. Western also answered questions and gave notice that more information was available in the Rate Brochure.

5. On September 9, 2008, beginning at 11:30 a.m. (MDT), following the public information forum, a public comment forum was held. The comment forum gave the public an opportunity to comment for the record. No oral or written comments were received at this forum.

6. On September 10, 2008, beginning at 8 a.m. (CDT), Western held a public information forum at the Holiday Inn in Sioux Falls, South Dakota. Western provided updates to the proposed firm electric service rates for LAP and P–SMBP—ED. Western also answered questions and gave notice that more information was available in the rate brochure.

7. On September 10, 2008, beginning at 10:30 a.m. (CDT), following the public information forum, a public comment forum was held. The comment forum gave the public an opportunity to comment for the record. One oral comment was received at this forum.

8. Western provided a Web site with all of the letters, time frames, dates and locations of forums, documents discussed at the information meetings, FRN, Rate Brochure, and all other information about this rate process. The Web site is located at *http://www.wapa.gov/rm/ratesRM/2009/default.htm*.

9. Western received 15 comment letters and one oral comment during the consultation and comment period, which ended November 13, 2008. All formally submitted comments have been considered in preparing this Rate Order.

Comments

Written comments were received from the following organizations:

City of Bayard, Nebraska
City of Benkelman, Nebraska
City of Fort Morgan, Colorado
City of Holyoke, Colorado
City of Gering, Nebraska
City of Imperial, Nebraska
City of Kimball, Nebraska
City of Mitchell, Nebraska
City of Torrington, Colorado
Midwest Electric Consumers Association
Prairie Band Potawatomi Nation
Town of Fleming, Colorado
Town of Julesburg, Colorado
Town of Lyons, Colorado
Village of Morrill, Nebraska

A representative of the following organization made an oral comment:
Minnesota Municipal Utilities

Project Descriptions

Loveland Area Projects

The Post-1989 General Power Marketing and Allocation Criteria, published in the **Federal Register** on January 31, 1986 (51 FR 4012), integrated the resources of the P–SMBP—WD and Fry-Ark. This operational and contractual integration, known as LAP, allowed an increase in marketable resource, simplified contract administration, and established a blended rate for LAP power sales.

The P–SMBP—WD and Fry-Ark retain separate financial status. For this reason, separate PRSs are prepared annually for each project. These PRSs are used to determine the sufficiency of the firm electric service rate to generate adequate revenue to repay project investment and costs during each project's prescribed repayment period. The revenue requirement of the Fry-Ark PRS is combined with the P–SMBP—WD revenue requirement, derived from the P–SMBP PRS, to develop one rate for LAP firm electric sales.

Pick-Sloan Missouri Basin Program—Western Division

The P–SMBP was authorized by Congress in section 9 of the Flood Control Act of December 22, 1944, commonly referred to as the Flood Control Act of 1944. This multipurpose program provides flood control, irrigation, navigation, recreation, preservation and enhancement of fish and wildlife, and power generation. Multipurpose projects have been developed on the Missouri River and its tributaries in Colorado, Montana, Nebraska, North Dakota, South Dakota and Wyoming.

In addition to the multipurpose water projects authorized by section 9 of the Flood Control Act of 1944, certain other existing projects have been integrated with the P–SMBP for power marketing, operation and repayment purposes. The Colorado-Big Thompson, Kendrick, and Shoshone Projects were combined with the P–SMBP in 1954, followed by the North Platte Project in 1959. These projects are referred to as the ''Integrated Projects'' of the P–SMBP.

The Flood Control Act of 1944 also authorized the inclusion of the Fort Peck Project with the P–SMBP for operation and repayment purposes. The Riverton Project was integrated with the P–SMBP in 1954, and in 1970 was reauthorized as a unit of P–SMBP.

The P–SMBP is administered by two regions. The Rocky Mountain Region with a regional office in Loveland, Colorado, markets the Western Division power of P–SMBP and the Upper Great Plains Region with a regional office in Billings, Montana, markets power from the Eastern Division of P–SMBP. The Rocky Mountain Region markets LAP power (a combination of P–SMBP—WD and Fry-Ark power) in northeastern Colorado, east of the Continental Divide in Wyoming, west of the 101st meridian in Nebraska, and most of Kansas. The Upper Great Plains Region markets power in western Iowa, western Minnesota, Montana east of the Continental Divide, North Dakota, South Dakota, and the eastern two-thirds of Nebraska. P–SMB power is marketed to approximately 60 firm power Customers by the Rocky Mountain Region and approximately 300 firm power Customers by the Upper Great Plains Region.

Fryingpan-Arkansas Project

Fry-Ark is a trans-mountain diversion development in southeastern Colorado authorized by the Act of Congress on August 16, 1962 (Pub. L. 87–590, 76 Stat. 389, as amended by Title XI of the Act of Congress on October 27, 1974 (Pub. L. 93–493, 88 Stat. 1486, 1497)). The Fry-Ark diverts water from the Fryingpan River and other tributaries of the Roaring Fork River in the Colorado River Basin on the West Slope of the Rocky Mountains to the Arkansas River on the East Slope. The water diverted from the West Slope, together with regulated Arkansas River water, provides supplemental irrigation, M&I water supplies, and produces hydroelectric power. Flood control, fish and wildlife enhancement, and recreation are other important purposes of Fry-Ark. The only generating facility in Fry-Ark is the Mt. Elbert Pumped-Storage powerplant on the East Slope.

Power Repayment Studies—Firm Electric Service Rate

Western prepares PRSs each FY to determine if revenues will be sufficient to repay, within the required time, all costs assigned to the LAP. Repayment

criteria are based on law, policies including DOE Order RA 6120.2, and authorizing legislation. To meet Cost Recovery Criteria outlined in DOE Order RA 6120.2, revised studies and rate adjustments have been developed to demonstrate that sufficient revenues will be collected under the proposed rates to meet future obligations.

Existing and Provisional Rates

A comparison of the existing and Provisional Rates for LAP firm electric service follows:

TABLE 1—COMPARISON OF EXISTING AND PROVISIONAL RATES LAP FIRM ELECTRIC SERVICE

Firm electric service	Existing rate (January 1, 2008) L–F7	Provisional rate L–F8	Percent change (%)
LAP Revenue Requirement (million)	$66.1	$75.9	14.9
LAP Composite Rate (mills/kWh)	32.42	37.24	14.9
Firm Energy Rate (mills/kWh)	16.21	18.62	14.9
Firm Capacity Rate ($/kWmonth)	$4.25	$4.88	14.9

Certification of Rates

Western's Administrator certified that the Provisional Rates for LAP firm electric service under Rate Schedule L–F8 are the lowest possible rates consistent with sound business principles. The Provisional Rates were developed following administrative policies and applicable laws.

LAP Firm Electric Service Rate Discussion

According to Reclamation Law, Western must establish power rates sufficient to recover operation, maintenance, purchased power and interest expenses, and repay power investment and irrigation aid.

The Criteria, published in the **Federal Register** on January 31, 1986 (51 FR 4012), operationally and contractually integrated the resources of the P–SMBP—WD and Fry-Ark (thereafter referred to as LAP). A blended rate was established for the sale of LAP firm electric service. The P–SMBP—WD portion of the revenue requirement for LAP firm electric service rates was developed from the revenue requirement calculated in the P–SMBP Ratesetting PRS. The P–SMBP—WD revenue requirement increased approximately 18.6 percent from the previous revenue requirement due to the economic impact of the drought, increased annual expenses, increased investments, and increased interest expenses associated with deficits. The revenue requirements for P–SMBP—WD are as follows:

TABLE 2—SUMMARY OF P–SMBP–WD REVENUE REQUIREMENTS ($000)

Current Revenue Requirement (Jan 08) (26.04 mills/kWh × 1,988,000,000 kWh)	$51,767
Provisional Increase (4.85 mills/kWh × 1,988,000,000 kWh)	9,642
Provisional Revenue Requirement (26.04 + 4.85 = 30.89 mills/kWh × 1,988,000,000 kWh)	61,409

The adjustment to the P–SMBP revenue requirement is a separate formal rate process which is documented in Rate Order No. WAPA–140.

Fry-Ark

The Fry-Ark portion of the revenue requirement for LAP firm electric service rates was developed from the revenue requirement calculated in the Fry-Ark Ratesetting PRS. The Fry-Ark revenue requirement increased approximately 1.25 percent due to increased O&M expenses and the economic impact of the drought. The revenue requirements for Fry-Ark are as follows:

TABLE 3—SUMMARY OF FRY-ARK REVENUE REQUIREMENTS ($000)

Current Revenue Requirement (Jan 08)	$14,365
Provisional Increase	180
Provisional Revenue Requirement	14,545

The following table compares LAP existing revenue requirements to the proposed revenue requirements:

TABLE 4—SUMMARY OF LAP REVENUE REQUIREMENTS ($000)

	Existing (January 2008)	Provisional
P–SMBP—WD	$51,767	$61,409
Fry-Ark	14,365	14,545
Total LAP	66,132	75,954

Western will continue to identify its firm electric service revenue requirement using Base and Drought Adder components. The Base component is a fixed revenue requirement for each project that includes annual O&M expenses, investment repayment and associated interest, normal timing power purchases, and transmission costs. Normal timing power purchases are purchases due to operational constraints (*e.g.*, management of endangered species habitat, water quality, navigation, control area purposes, etc.) not associated with the current drought in the Regions. The Base component can not be adjusted by Western without a public process.

The Drought Adder component for each project is a formula-based revenue requirement that includes costs attributable to the present drought conditions in the Regions. The Drought Adder component includes costs associated with future non-timing power purchases to meet firm electric service contractual obligations not covered with available system generation due to the drought, previously incurred deficits due to purchased power debt that resulted from non-timing power purchases made during this drought, and the interest associated with the previously incurred and future drought debt. The Drought Adder component is designed to repay the drought debt within 10 years from the time the debt was incurred using balloon-payment methodology. For example, the drought debt incurred by Western in 2007 will be repaid by 2017. Adjustments to the Drought Adder rate component of less than or equal to 2

mills/kWh to the LAP composite rate will be made by Customer notification of a revised rate schedule with a January implementation date.

The annual revenue requirement calculation formula is: Annual Revenue Requirement = Base Revenue Requirement + Drought Adder Revenue Requirement. Under this Provisional Rate, the LAP annual revenue requirement is $75.9 million (Base revenue requirement of $49.9 million plus a Drought Adder revenue requirement of $26 million).

A comparison of the current and proposed rate components is listed in the following table:

TABLE 5—SUMMARY OF LAP COMPONENTS

	Existing rates L–F7			Provisional rates L–F8		
	Base	Drought adder	Total	Base	Drought adder	Total
Firm Capacity ($/kW-month)	$3.13	$1.12	$4.25	$3.21	$1.67	$4.88
Firm Energy (mills/kWh)	11.92	4.29	16.21	12.23	6.39	18.62

Continuing to identify the firm electric service revenue requirement using Base and Drought Adder rate components will assist Western in presenting the effects of the drought within the Regions, demonstrating repayment of the drought related costs, and being more responsive to changes in drought related expenses. Western will continue to charge and bill Customers firm electric service rates for energy and capacity, which are the sum of the Base and Drought Adder rate components.

Western reviews its firm electric service rates annually. Western will review the Base rate component after the annual PRSs are complete, generally in the first quarter of the calendar year. If an adjustment to the Base rate component is necessary, Western will initiate a public process pursuant to 10 CFR part 903 prior to making an adjustment.

In accordance with the original implementation of the Drought Adder rate component, Western will review the Drought Adder rate component each September to determine if drought costs differ from those projected in the PRSs. If drought costs differ, Western will determine whether an adjustment to the Drought Adder rate component is necessary. Western will use recent Corps and Reclamation hydrological estimates and historical data to determine the estimated amounts for future purchase power costs. For any drought-related adjustments of less than or equal to 2 mills/kWh to the LAP Composite Rate, Western will notify Customers by letter in October and implement the adjustment in the following January billing cycle. For the portion of any planned incremental adjustment greater than 2 mills/kWh to the LAP composite rate, Western will engage in a public process pursuant to 10 CFR part 903 prior to implementing that portion of the adjustment. Although decremental adjustments to the Drought Adder will occur, the adjustment cannot result in the Drought Adder being a negative number. Western will conduct a preliminary review of the Drought Adder in early summer and advise Customers by letter of any estimated change to the Drought Adder for the following January, with the final Drought Adder rate component adjustment verified by notification in the October letter to the Customers. Implementing the Drought Adder rate component adjustment on January 1 of each year will help keep the drought deficits from escalating, lower the interest expense due to drought deficits, demonstrate responsible deficit management, and provide prompt drought deficit repayments.

Western's current and Provisional Rate schedules permit a formula-based adjustment of the Drought Adder rate component of up to 2 mills/kWh. The 2 mills/kWh cap is intended to place a limit on the amount the Drought Adder formula can be adjusted relative to associated drought costs without initiating a public process to recover costs attributable to the Drought Adder formula rate for any one-year cycle.

Statement of Revenue and Related Expenses

The following table provides a summary of projected revenue and expense data for the Fry-Ark firm electric service revenue requirement through the 5-year Provisional Rate approval period:

TABLE 6—FRY-ARK COMPARISON OF 5-YEAR RATE APPROVAL PERIOD (FY 2009–2013)

[Total revenue and expense ($000)]

	Existing rate	Provisional rate	Difference
Total Revenues	$76,744	$78,983	$2,239
Revenue Distribution:			
Expenses:			
O&M	25,336	28,868	3,532
Purchase Power	82	1,398	1,316
Transmission	19,889	20,027	138
Interest [1]	22,676	21,383	−1,293
Total Expenses	67,983	71,676	3,693
Principal Payments:			
Capitalized Expenses (deficits)	0	0	0
Original Project and Additions	315	1,762	1,447
Replacements [2]	8,446	5,545	−2,901
Total Principal Payments	8,761	7,307	−1,454

TABLE 6—FRY-ARK COMPARISON OF 5-YEAR RATE APPROVAL PERIOD (FY 2009–2013)—Continued

[Total revenue and expense ($000)]

	Existing rate	Provisional rate	Difference
Total Revenue Distribution	76,744	78,983	2,239

[1] The decrease in interest expense is primarily due to a decrease in projected replacements.
[2] The decrease in replacement payments is primarily due to a reduction of planned capital replacements at Mt. Elbert by Reclamation.

The summary of P–SMBP—WD revenues and expenses for the 5-year Provisional Rate approval period is included in the P–SMBP Statement of Revenue and Related Expenses that is part of Rate Order No. WAPA–140.

Basis for Rate Development

The existing rates for LAP firm electric service in Rate Schedule L–F7, which expire December 31, 2012, no longer provide sufficient revenues to pay all annual costs, including interest expense, and repay investment and irrigation aid within the allowable period. The adjusted rates reflect increases due to the economic impact of the drought, annual expenses, investments, and interest expense associated with drought deficits. The Provisional Rates will provide sufficient revenue to pay all annual costs, including interest expense, and repay power investment and irrigation aid within the allowable periods. The Provisional Rates will take effect on the first day of the first full billing period beginning on or after February 1, 2009, and will remain in effect on an interim basis, pending FERC's confirmation and approval of them or substitute rates on a final basis, through December 31, 2013.

Emergency Fund Discussion

Due to continuing below normal hydropower generation, Western may need to use the Continuing Fund (Emergency Fund) to pay for unanticipated purchase power and wheeling expenses necessary to meet its contractual obligations for the sale and delivery of power to its Customers. Should Western use this funding mechanism, Western will replenish the Continuing Fund (Emergency Fund) in accordance with law and Western's current repayment policy.[2]

Comments

The comments and responses below regarding the firm electric service rates are paraphrased for brevity when not affecting the meaning of the statement(s). Direct quotes from comment letters are used for clarification when necessary.

The issues discussed are (1) Firm Electric Service Rate and (2) MISO Markets.

1. Firm Electric Service Rate

Comment: Western received numerous comments from Customers stating that they understand the need for the rate increases and support the concept of the Drought Adder, which establishes a window during which drought-related expenses are repaid.

Response: Western appreciates the Customer support received for the rate adjustment proposal. Western continues separation of the annual revenue requirement into the Base and Drought Adder rate components.

Comment: Many comments were received from Customers expressing appreciation for Western's commitment to keep them informed and involved throughout this rate process. Customers were grateful for past cost-cutting measures and encouraged Western's continued vigilance in keeping controllable costs as low as possible.

Response: Western is pleased with the level of Customer interest and participation in the public meetings. Under the Flood Control Act of 1944, power is to be sold at the lowest possible rates consistent with sound business principles. Western is committed to keeping controllable costs as low as possible while continuing to meet our firm electric service commitments.

Comment: Customers state that they are looking forward to working with Western's staff on the projected Base rate adjustments as they pertain to Western's draft Strategic Plan and Western's potential involvement in changes associated with MISO and SPP.

Response: Western's goal is to work closely with our Customers throughout this and future rate adjustments. Changes to the Base rate are made through a public process and allow for Customer input.

Comment: One Customer recognized the impacts that the extended drought has had on the current financial status of the P–SMBP and expressed support for the proposed firm power rate increases. The Customer also stated that the repayment of Federal investment through Federal power rates is taken very seriously. In the future, the Drought Adder will help to avoid a repetition of the financial impacts that are seen today.

Response: Western acknowledges the financial impact of the extended drought, and the need for a firm power rate increase as well. The Drought Adder will allow Western to be more responsive to the changing hydrological conditions.

Comment: A Customer representative acknowledged the financial challenges of this drought and made note of the difficulties Federal power customers are confronted with in fulfilling their financial responsibilities to the Federal government. They noted the good water years in the 1990's generated significant revenue surplus to P–SMBP's financial requirements. Also noted was Western's administration of repayment according to repayment policies and the repayment of a significant amount of capital investment ahead of schedule. This early repayment benefitted both P–SMBP Customers and the Federal government, but left no financial resources to deal with the drought. Thus, the current repayment practices and policies exacerbate the impacts of the natural swings in hydrology. When the drought deficit is repaid, there will still be a substantial amount of paid ahead investments for the P–SMBP. The Customer would like to work with Western to address this issue.

Response: Western acknowledges the financial impacts of the current drought and believes the ratemaking policy of identifying the Base and Drought Adder components will make the rates more responsive to hydrological changes caused by both drought and flush water years. The Drought Adder component may be adjusted annually up to 2 mills/kWh without a public process to quickly address drought impacts, and the Base Rate component can only be adjusted through a public process. This practice will lower interest expense due to drought deficits and demonstrate responsible deficit management. Western acknowledges the statements regarding Western's adherence to repayment policies and the associated repayment of a significant amount of

[2] Western's Continuing Fund (Emergency Fund) Policy can be found at *http://www.wapa.gov/powerm/pdf/repaypolicy.pdf.*

capital investment ahead of schedule in the 1990s. Prepayment is an integral part of the long-term plan for the project and has provided rate stability for Consumers while meeting Federal repayment obligations. The ability to reduce the Drought Adder rate component when normal hydrological conditions return to P–SMBP will allow appropriate recognition of repayment obligations. Western appreciates the Customer's support and willingness to work with Western and will continue to discuss issues, impacts, and possible solutions with the Customers.

2. MISO Markets

Comment: Western has received numerous comments concerning the issue of whether the Upper Great Plains Region should join MISO and its Day Two Markets. The comments support a thorough review of costs and benefits to all of Western's Customers, before a change is made. Comments suggest that administrative costs associated with the Day Two markets may impose a significant burden, especially on smaller Customers. There were concerns that if Western joins MISO and other area transmission owners that serve the Customers join the SPP, there could be significant cost issues associated with the delivery of Western's allocation to preferred customer loads. Comments stated that if there are benefits to participating in the Day Two market, those benefits should flow to all of Western's Customers, not just those that participate in joint dispatching arrangements inside the Integrated System. Concerns are that costs associated to deliver Western's allocations to the edge of the system should be recovered as part of the total system transmission rate recovery, as it has been done in the past.

Response: This comment is not directly related to the proposed rate adjustment and it is outside the scope of this rate process. However, Western is actively addressing these issues as well as other options and evaluating them based on cost and benefit to Western's Customers.

Comment: A commenter noted that MISO intends to start an ancillary service market. When that occurs, Western has preference power customers that are served in the MISO footprint. The question asked was, does Western have avoided cost due to the MISO market providing those ancillary services? Specifically, are there avoided cost in Schedule 3, Regulation and Frequency Response, Schedule 5, Operating Reserves Spinning, and Schedule 6, Operating Reserves Supplemental?

Response: This comment is not directly related to the proposed rate action and is outside the scope of this rate process. However, Western is actively evaluating the MISO Module F, as well as other options. Changes in the electric utility market are still evolving. As Western moves forward in evaluating the impacts on market participation and changes for our Customers, we will continue to keep our Customers informed of our decisions regarding these matters.

Availability of Information

Information about this rate adjustment, including the PRSs, comments, letters, memorandums, and other supporting materials that were used to develop the Provisional Rates are available for public review in the Rocky Mountain Regional Office, Western Area Power Administration, 5555 E. Crossroads Boulevard, Loveland, Colorado.

Ratemaking Procedure Requirements

Environmental Compliance

In compliance with the National Environmental Policy Act (NEPA) of 1969 (42 U.S.C. 4321–4347); Council on Environmental Quality Regulations (40 CFR parts 1500–1508); and DOE NEPA Regulations (10 CFR part 1021), Western has determined that this action is categorically excluded from preparing an environmental assessment or an environmental impact statement.

Determination Under Executive Order 12866

Western has an exemption from centralized regulatory review under Executive Order 12866; accordingly, no clearance of this notice by the Office of Management and Budget is required.

Submission to the Federal Energy Regulatory Commission

The Provisional Rates herein confirmed, approved, and placed into effect, together with supporting documents, will be submitted to FERC for confirmation and final approval.

Order

In view of the foregoing and under the authority delegated to me, I confirm and approve on an interim basis, effective on the first full billing period on or after February 1, 2009, Rate Schedule L-F8 for the Loveland Area Projects of the Western Area Power Administration. The rate schedule shall remain in effect on an interim basis, pending FERC's confirmation and approval of them or substitute rates on a final basis through December 31, 2013.

Dated: January 8, 2009.

Jeffrey F. Kupfer,

Acting Deputy Secretary of Energy.

Rate Schedule L–F8
(Supersedes Rate Schedule L–F7)
Effective February 1, 2009

United States Department of Energy
Western Area Power Administration

Loveland Area Projects; Colorado, Kansas, Nebraska, Wyoming

Schedule of Rates for Firm Electric Service

(Approved Under Rate Order No. WAPA–142)

Effective: The first day of the first full billing period beginning on or after February 1, 2009, through December 31, 2013.

Available: Within the marketing area served by the Loveland Area Projects.

Applicable: To the wholesale power customers for firm electric service supplied through one meter at one point of delivery, or as otherwise established by contract.

Character: Alternating current, 60 hertz, three phase, delivered and metered at the voltages and points established by contract.

Monthly Rates:

Capacity Charge: $4.88 per kilowatt of billing capacity.

Energy Charge: 18.62 mills per kilowatthour (kWh) of monthly entitlement.

Billing Capacity: Unless otherwise specified by contract, the billing capacity will be the seasonal contract rate of delivery.

Charge Components:

Base: A fixed revenue requirement that includes operation and maintenance expense, investment repayment and associated interest, normal timing power purchases (purchases due to operational constraints, not associated with drought), and transmission costs. The Base revenue requirement is $49.9 million.

$$\text{Base Capacity} = \frac{50\% \times \text{Base Revenue Requirement}}{\text{Firm Billing Capacity}} = \$3.21/\text{kW month}$$

$$\text{Base Energy} = \frac{50\% \times \text{Base Revenue Requirement}}{\text{Annual Energy}} = 12.23 \text{ mills/kWh}$$

Drought Adder: A formula-based revenue requirement that includes future purchase power expense excluding timing power purchases, previous purchase power drought deficits, and interest on the purchase power drought deficits. For the period beginning on or after the first day of the first full billing period beginning on or after February 1, 2009, the Drought Adder revenue requirement is $26 million.

$$\text{Drought Adder Capacity} = \frac{50\% \times \text{Drought Adder Revenue Requirement}}{\text{Firm Billing Capacity}} = \$1.67/\text{kW month}$$

$$\text{Drought Adder Energy} = \frac{50\% \times \text{Drought Adder Revenue Requirement}}{\text{Annual Energy}} = \$6.39 \text{ mills/kWh}$$

Process: Any proposed change to the Base component will require a public process. The Drought Adder may be adjusted annually using the above formula for any costs attributed to drought of less than or equal to the equivalent of 2 mills/kWh to the LAP composite rate. Any planned incremental adjustment to the Drought Adder component greater than the equivalent of 2 mills/kWh to the LAP composite rate will require a public process.

Adjustments:

For Drought Adder: Adjustments pursuant to the Drought Adder component will be documented in a revision to this rate schedule.

For Transformer Losses: If delivery is made at transmission voltage but metered on the low-voltage side of the substation, the meter readings will be increased to compensate for transformer losses as provided for in the contract.

For Power Factor: None. The customer will be required to maintain a power factor at all points of measurement between 95-percent lagging and 95-percent leading.

[FR Doc. E9–897 Filed 1–15–09; 8:45 am]

BILLING CODE 6450–01–P

DEPARTMENT OF ENERGY

Western Area Power Administration

Pick-Sloan Missouri Basin Program—Eastern Division-Rate Order No. WAPA–140

AGENCY: Western Area Power Administration, DOE.

ACTION: Notice of Order Concerning Firm Power Rates.

SUMMARY: The Acting Deputy Secretary of Energy confirmed and approved Rate Order No. WAPA–140 and Rate Schedules P–SED–F10 and P–SED–FP10, placing firm power and firm peaking power rates from the Pick-Sloan Missouri Basin Program—Eastern Division (P–SMBP—ED) of the Western Area Power Administration (Western) into effect on an interim basis. The provisional rates will be in effect until the Federal Energy Regulatory Commission (FERC) confirms, approves, and places them into effect on a final basis or until they are replaced by other rates. The provisional rates will provide sufficient revenue to pay all annual costs, including interest expense, and repayment of power investment and irrigation aid within the allowable periods.

DATES: Rate Schedules P–SED–F10 and P–SED–FP10 will be placed into effect on an interim basis on the first day of the first full billing period beginning on or after February 1, 2009, and will remain in effect until FERC confirms, approves, and places the rate schedules in effect on a final basis ending December 31, 2013, or until the rate schedules are superseded.

FOR FURTHER INFORMATION CONTACT: Mr. Robert J. Harris, Regional Manager, Upper Great Plains Region, Western Area Power Administration, 2900 4th Avenue North, Billings, MT 59101–1266, telephone (406) 247–7405, e-mail *rharris@wapa.gov*, or Ms. Linda Cady-Hoffman, Rates Manager, Upper Great Plains Region, Western Area Power Administration, 2900 4th Avenue North, Billings, MT 59101–1266, (406) 247–7439, e-mail *cady@wapa.gov*.

SUPPLEMENTARY INFORMATION: The Deputy Secretary of Energy approved existing Rate Schedules P–SED–F9 and P–SED–FP9 for P–SMBP—ED firm and firm peaking electric service, respectively, on an interim basis on November 1, 2007 (72 FR 68,64,067 November 14, 2007), for a 5-year period beginning on January 1, 2008, and ending December 31, 2012.[1]

Under Rate Schedule P–SED–F9, the composite rate is 24.49 mills per kilowatthour (mills/kWh), the firm energy rate is 13.99 mills/kWh, and the firm capacity rate is $5.65 per kilowattmonth (kWmonth). Under Rate Schedule P–SED–FP9, the firm peaking capacity rate is $5.10/kWmonth. These Rate Schedules are formula based with Base and Drought Adder components and provide for an up to 2 mills/kWh increase in the Drought Adder rate component.

The current rate adjustment reflects a rate increase based on the P–SMBP Final Fiscal Year 2007 Power Repayment Study (PRS). The PRS sets the total annual P–SMBP—ED revenue requirement for 2009 for firm and firm peaking electric service at $283.0 million, or a 19.9 percent increase. The current rates, including the 2 mills/kWh increase provided for under the Drought Adder formula rate component, are not sufficient to meet the P–SMBP—ED revenue requirements.

The P–SMBP—ED revenue requirement increase is mainly attributed to the economic impacts of the drought. A decrease in hydro-power generation has caused purchase power expense to increase and revenue from

[1] FERC confirmed and approved Rate Order No. WAPA–135 on April 14, 2008, in Docket No. EF08–5031–000. See *United States Department of Energy, Western Area Power Administration, Pick-Sloan Missouri Basin Program*, 123 FERC ¶ 62048 (April 14, 2008).

non-firm energy sales to decrease. There has been an increase in both the price and volume of purchase power needed to meet contractual commitments to Western's customers. The purchase price of power is set by supply and demand on the open market.

The existing firm electric service Rate Schedules P–SED–F9 and P–SED–FP9 are being superseded by Rate Schedules P–SED–F10 and P–SED–FP10, respectively. Under Rate Schedule P–SED–F10, the provisional rates for firm electric services will result in a combined composite rate of 29.34 mills/kWh. The energy rate will be 16.71 mills/kWh (a Base component of 9.27 mills/kWh and a Drought Adder component of 7.44 mills/kWh), and the capacity rate will be $6.80/kWmonth (a Base component of $3.80/kWmonth and a Drought Adder component of $3.00/kWmonth). Under Rate Schedule P–SED–FP10, the provisional rates for firm peaking electric services consist of a capacity charge of $6.20/kWmonth (a Base component of $3.40/kWmonth and a Drought Adder component of $2.80/kWmonth) and an energy charge of 16.71 mills/kWh.

By Delegation Order No. 00–037.00, effective December 6, 2001, the Secretary of Energy delegated: (1) The authority to develop power and transmission rates to the Administrator of Western; (2) the authority to confirm, approve, and place such rates into effect on an interim basis to the Deputy Secretary of Energy; and (3) the authority to confirm, approve, and place into effect on a final basis; to remand; or to disapprove such rates to FERC. Existing Department of Energy procedures for public participation in power rate adjustments (10 CFR part 903) were published on September 18, 1985.

Under Delegation Order Nos. 00–037.00 and 00–001.00C, 10 CFR part 903, and 18 CFR part 300, I hereby confirm, approve, and place Rate Order No. WAPA–140, the proposed P–SMBP—ED firm power, and firm peaking power rates into effect on an interim basis.

The new Rate Schedules P–SED–F10 and P–SED–FP10 will be promptly submitted to FERC for confirmation and approval on a final basis.

Dated: January 8, 2009.

Jeffrey F. Kupfer,

Acting Deputy Secretary.

Department of Energy

Deputy Secretary

In the matter of:

Western Area Power Administration Rate Adjustment for the Pick-Sloan Missouri Basin Program—Eastern Division; Rate Order No. WAPA–140;

Order Confirming, Approving, and Placing the Pick-Sloan Missouri Basin Program—Eastern Division Firm Power and Firm Peaking Power Service Rates Into Effect on an Interim Basis

The firm and firm peaking electric service rates for the Pick-Sloan Missouri Basin Program—Eastern Division were established in accordance with section 302 of the Department of Energy (DOE) Organization Act (42 U.S.C. 7152). This Act transferred to and vested in the Secretary of Energy the power marketing functions of the Secretary of the Department of the Interior and the Bureau of Reclamation under the Reclamation Act of 1902 (ch. 1093, 32 Stat. 388), as amended and supplemented by subsequent laws, particularly section 9(c) of the Reclamation Project Act of 1939 (43 U.S.C. 485h(c)) and section 5 of the Flood Control Act of 1944 (16 U.S.C. 825s) and other Acts that specifically apply to the project involved.

By Delegation Order No. 00–037.00, effective December 6, 2001, the Secretary of Energy delegated: (1) The authority to develop power and transmission rates to the Administrator of Western; (2) the authority to confirm, approve, and place such rates into effect on an interim basis to the Deputy Secretary of Energy; and (3) the authority to confirm, approve and place into effect on a final basis; to remand; or to disapprove such rates to the Federal Energy Regulatory Commission. Existing DOE procedures for public participation in power rate adjustments (10 CFR part 903) were published on September 18, 1985.

Acronyms and Definitions

As used in this Rate Order, the following acronyms and definitions apply:

Administrator: The Administrator of the Western Area Power Administration.

Base: Revenue requirement component of the power rate including annual operation and maintenance expenses, investment repayment and associated interest, normal timing power purchases, and transmission costs.

Capacity: The electric capability of a generator, transformer, transmission circuit, or other equipment. It is expressed in kilowatts.

Capacity Charge: The rate which sets forth the charges for capacity. It is expressed in dollars per kilowattmonth.

Composite Rate: The rate for commercial firm power which is the total annual revenue requirement for capacity and energy divided by the total annual energy sales. It is expressed in mills per kilowatthour and used for comparison purposes.

Corps: The United States Army Corps of Engineers.

CROD: Contract Rate of Delivery. The maximum amount of capacity and energy allocated to a preference customer for a period specified under a contract.

Customer: An entity with a contract that is receiving service from Western's Upper Great Plains Region.

Deficits: Deferred or unrecovered annual and/or interest expenses.

DOE: United States Department of Energy.

DOE Order RA 6120.2: An order outlining power marketing administration financial reporting and rate-making procedures.

Drought Adder: Formula-based revenue requirement component including costs associated with the drought.

Energy: Measured in terms of the work it is capable of doing over a period of time. It is expressed in kilowatthours.

Energy Charge: The rate which sets forth the charges for energy. It is expressed in mills per kilowatthour and applied to each kilowatthour delivered to each customer.

FERC: Federal Energy Regulatory Commission.

Firm: A type of product and/or service available at the time requested by the customer.

FRN: **Federal Register** notice.

Fry-Ark: Fryingpan-Arkansas Project.

FY: Fiscal Year; October 1 to September 30.

kW: Kilowatt—the electrical unit of capacity that equals 1,000 watts.

kWh: Kilowatthour—the electrical unit of energy that equals 1,000 watts in 1 hour.

kWmonth: Kilowattmonth—the electrical unit of the monthly amount of capacity.

LAP: Loveland Area Projects.

Load Factor: The ratio of average load in kW supplied during a designated period to the peak or maximum load in kW occurring in that period.

mills/kWh: Mills per kilowatthour—the unit of charge for energy (equal to one tenth of a cent or one thousandth of a dollar).

MISO: Midwest Independent Transmission System Operator.

MW: Megawatt—the electrical unit of capacity that equals 1 million watts or 1,000 kilowatts.

NEPA: National Environmental Policy Act of 1969 (42 U.S.C. 4321, *et seq.*).

Non-timing Power Purchases: Power purchases that are not related to operational constraints such as management of endangered species, species habitat, water quality, navigation, control area purposes, etc.

O&M: Operation and Maintenance.

P–SMBP: The Pick-Sloan Missouri Basin Program.

P–SMBP—ED: Pick-Sloan Missouri Basin Program—Eastern Division.

P–SMBP—WD: Pick-Sloan Missouri Basin Program—Western Division.

Power: Capacity and energy.

Power Factor: The ratio of real to apparent power at any given point and time in an electrical circuit. Generally, it is expressed as a percentage.

Preference: The provisions of Reclamation Law which require Western to first make Federal power available to certain entities. For example, section 9(c) of the Reclamation Project Act of 1939 (43 U.S.C. 485h(c)) states that preference in the sale of Federal power shall be given to municipalities and other public corporations or agencies and also to cooperatives and other nonprofit organizations financed in whole or in part by loans made under the Rural Electrification Act of 1936.

Provisional Rate: A rate which has been confirmed, approved, and placed into effect on an interim basis by the Deputy Secretary.

PRS: Power Repayment Study.

Rate Brochure: An August 2008 document explaining the rationale and background for the rate proposal contained in this Rate Order.

Reclamation: The United States Department of the Interior, Bureau of Reclamation.

Reclamation Law: A series of Federal laws. Viewed as a whole, these laws create the originating framework under which Western markets power.

Revenue Requirement: The revenue required to recover annual expenses (such as O&M, purchase power, transmission service expenses, interest, and deferred expenses) and repay Federal investments and other assigned costs.

RMR: The Rocky Mountain Customer Service Region of the Western Area Power Administration.

SPP: Southwest Power Pool.

Timing Power Purchases: Power purchases that are due to operational constraints (e.g. management of endangered species, species habitat, water quality, navigation, control area purposes, etc.) and not associated with the drought.

UGPR: The Upper Great Plains Customer Service Region of the Western Area Power Administration.

Western: The United States Department of Energy, Western Area Power Administration.

Effective Date

The new provisional rates will take effect on the first day of the first full billing period beginning on or after February 1, 2009, and will remain in effect until December 31, 2013, pending approval by FERC on a final basis.

Public Notice and Comment

Western followed the Procedures for Public Participation in Power and Transmission Rate Adjustments and Extensions, 10 CFR part 903, in developing these rates. The steps Western took to involve interested parties in the rate process were:

1. The proposed rate adjustment process began April 9, 2008, when Western's UGPR mailed a notice announcing informal customer meetings to all P–SMBP—ED preference customers and interested parties. The informal meetings were held on April 29, 2008, in Denver, Colorado, and on April 30, 2008, in Sioux Falls, South Dakota. At these informal meetings, Western explained the rationale for the rate adjustment, presented rate designs and methodologies, and answered questions.

2. A **Federal Register** notice, published on August 15, 2008 (73 FR 47945) announced the proposed rates for P–SMBP—ED, began a public consultation and comment period and announced the public information and public comment forums.

3. On August 18, 2008, Western mailed letters to all P–SMBP—ED preference customers and interested parties transmitting the FRN published on August 15, 2008.

4. On August 29, 2008, a letter was mailed to preference customers and interested parties informing them of a $400,000 misstatement in the FRN published revenue requirement.

5. On September 9, 2008, at 9 a.m. (MDT), Western held a public information forum at the Ramada Plaza Hotel in Northglenn, Colorado. Western provided updates to the proposed firm power rates for the P–SMBP, which encompasses the P–SMBP—ED and LAP rates. Western also answered questions and gave notice that more information was available in the rate brochure.

6. On September 9, 2008, at 11:30 a.m. (MDT), following the public information forum, and at the same location, a public comment forum was held. The comment forum gave the public an opportunity to comment for the record. No oral or written comments were received at this forum.

7. On September 10, 2008, at 8 a.m. (CDT), Western held a public information forum at the Holiday Inn in Sioux Falls, South Dakota. Western provided updates to the proposed firm power rates for the P–SMBP, which encompasses the P–SMBP—ED and LAP rates. Western also answered questions and gave notice that more information was available in the rate brochure.

8. On September 10, 2008, at 10:30 a.m. (CDT), following the public information forum, and at the same location, a public comment forum was held. The comment forum gave the public an opportunity to comment for the record. One oral comment was received at this forum.

9. Western provided a Web site which contains all of the letters, time frames, dates, and locations of forums, documents discussed at the information meetings, FRNs, rate brochure, and all other information about this rate process for easy customer access. The Web site is located at *http://www.wapa.gov/ugp/rates/2009FirmRateAdjust*.

10. During the consultation and comment period, which ended November 13, 2008, Western received 17 comment letters. One comment letter was rescinded. Western also received an oral comment. All formally submitted comments have been considered in preparing this Rate Order.

Comments

Written comments were received from the following organizations:

City of Blue Hill, Nebraska.
City of Burwell, Nebraska (2).
City of Fort Morgan, Colorado.
City of Sargent, Nebraska.
City of Wall Lake, Iowa.
City of West Point, Nebraska.
City of Wisner, Nebraska.
City of Wood River, Nebraska.
Corn Belt Power Cooperative, Iowa.
Mid-West Electric Consumers Association, Colorado.
North Iowa Municipal Electric Cooperative Association, Iowa.
Spencer Municipal Utilities, Iowa.
Village of Oxford, Nebraska.
Village of Shickley, Nebraska.
Village of Spencer, Nebraska.
Village of Stuart, Nebraska.

A representative of the following organization made an oral comment:

Minnesota Municipal Utilities, Minnesota.

Project Description

The P–SMBP was authorized by Congress in section 9 of the Flood Control Act of December 22, 1944, commonly referred to as the 1944 Flood Control Act. This multipurpose program provides flood control, irrigation, navigation, recreation, preservation and enhancement of fish and wildlife, and power generation. Multipurpose projects have been developed on the Missouri River and its tributaries in Colorado, Montana, Nebraska, North Dakota, South Dakota, and Wyoming.

In addition to the multipurpose water projects authorized by Section 9 of the Flood Control Act of 1944, certain other existing projects have been integrated with the P–SMBP for power marketing, operation, and repayment purposes. The Colorado-Big Thompson, Kendrick, and Shoshone Projects were combined with the P–SMBP in 1954, followed by the North Platte Project in 1959. These projects are referred to as the ''Integrated Projects'' of the P–SMBP.

The Flood Control Act of 1944 also authorized the inclusion of the Fort Peck Project with the P–SMBP for operation and repayment purposes. The Riverton Project was integrated with the P–SMBP in 1954 and in 1970 was reauthorized as a unit of P–SMBP.

The P–SMBP is administered by two regions. The UGPR, with a regional office in Billings, Montana, markets power from the Eastern Division of P–SMBP, and the RMR, with a regional office in Loveland, Colorado, markets the Western Division power of P–SMBP. The UGPR markets power in western Iowa, western Minnesota, Montana east of the Continental Divide, North Dakota, South Dakota, and the eastern two-thirds of Nebraska. The RMR markets P–SMBP—WD power, which in combination with Fry-Ark power is known as LAP power, in northeastern Colorado, east of the Continental Divide in Wyoming, west of the 101st meridian in Nebraska, and most of Kansas. The P–SMBP power is marketed to approximately 300 firm power customers by the UGPR and approximately 60 firm power customers by the RMR.

Power Repayment Study—Firm Power Rate

Western prepares a PRS each FY to determine if revenues will be sufficient to repay, within the required time, all costs assigned to the P–SMBP. Repayment criteria are based on law, policies including DOE Order RA 6120.2, and authorizing legislation. To meet Cost Recovery Criteria outlined in DOE Order RA 6120.2, a revised study and rate adjustment has been developed to demonstrate that sufficient revenues will be collected under proposed rates to meet future obligations.

Existing and Provisional Rates

Eastern Division

Under Rate Schedule P–SED–F9, the composite rate is 24.49 mills/kWh, the firm energy rate is 13.99 mills/kWh, and the firm capacity rate is $5.65/kWmonth. For Rate Schedule P–SED–FP9 the firm peaking capacity rate is $5.10/kWmonth. These Rate Schedules are formula based with Base and Drought Adder components and provide for an up to a 2 mills/kWh increase in the Drought Adder rate component.

The current rate adjustment reflects a rate increase based on the P–SMBP Fiscal Year 2007 PRS. The PRS sets the total annual P–SMBP—ED revenue requirement for 2009 for firm and firm peaking electric service at $283.0 million, or a 19.9 percent increase.

A comparison of the existing and provisional firm power and firm peaking power rates follow:

TABLE 1—COMPARISON OF EXISTING AND PROVISIONAL RATES PICK-SLOAN MISSOURI BASIN PROGRAM—EASTERN DIVISION

Firm electric service	Current rates	Provisional rates	Percent change
Rate Schedules	P–SED–F9/P–SED–FP9	P–SED–F10/P–SED–FP10	
Firm and Firm Peaking Revenue Requirement (million)	$235.9	$283.0	19.9
Composite Rate (mills/kWh)	24.49	29.34	19.8
Firm Capacity Rate (/kWmonth)	$5.65	$6.80	20.4
Firm Energy Rate (mills/kWh)	13.99	16.71	19.4
Firm Peaking Capacity Rate (/kWmonth)	$5.10	$6.20	21.6
Firm Peaking Energy Rate (mills/kWh)[1]	13.99	16.71	19.4

[1] Firm Peaking Energy is normally returned. This rate will be assessed in the event Firm Peaking Energy is not returned.

Western Division

The LAP rate is designed to recover the P–SMBP—WD revenue requirement for the P–SMBP and the revenue requirement for Fry-Ark. The adjustment to the LAP rate is a separate formal rate process which is documented in Rate Order No. WAPA–142. Rate Order No. WAPA–142 is scheduled to go into effect on the first day of the first full billing period after the Acting Deputy Secretary of Energy approves the rate.

Certification of Rates

Western's Administrator certified that the Provisional Rates for P–SMBP—ED firm power and firm peaking power rates are the lowest possible rates consistent with sound business principles. The Provisional Rates were developed following administrative policies and applicable laws.

P–SMBP—ED Firm Power Rate Discussion

According to Reclamation Law, Western must establish power rates sufficient to recover operation, maintenance, purchased power and interest expenses, and repay power investment and irrigation aid.

The P–SMBP—ED firm power and firm peaking power rates must be increased due to the economic impact of the drought, increased annual expenses, increased investments, and increased interest expense associated with deficits.

Under Rate Schedule P–SED–F10, Western will continue identifying its firm electric service revenue requirement using Base and Drought Adder rate components. The Base rate component is a revenue requirement that includes annual operation and maintenance expenses, investment repayment and associated interest, normal timing power purchases, and transmission costs. Western's normal timing power purchases are purchases due to operational constraints (e.g., management of endangered species habitat, water quality, navigation, etc.) and are not associated with the current drought. The Base component cannot be

adjusted by Western without a public process.

The Drought Adder rate component is a formula-based revenue requirement that includes costs attributable to the past and present drought conditions within the Pick-Sloan Program. The Drought Adder rate component includes costs associated with future non-timing power purchases to meet firm power contractual obligations not covered with available system generation due to the drought, previously incurred deficits due to purchased power debt that resulted from non-timing power purchases made during this drought, and the interest associated with the previously incurred and future drought deficit. The Drought Adder rate component is designed to repay Western's drought deficit within 10 years from the time the debt was incurred, using balloon-payment methodology. For example, the drought deficit incurred by Western in 2007 will be repaid by 2017.

The annual revenue requirement calculation will continue to be summarized by the following formula: Annual Revenue Requirement = Base Revenue Requirement + Drought Adder Revenue Requirement. Under this Provisional Rate, effective February 1, 2009, the P–SMBP—ED annual revenue requirement equals $294.1 million and is comprised of a Base revenue requirement of $163.5 million plus a Drought Adder revenue requirement of $130.6 million. Both the Base and Drought Adder rate components recover portions of the firm power revenue requirement, firm peaking power, and associated 5 percent discount revenue necessary to equal the P–SMBP—ED revenue requirement. A comparison of the current and proposed rate components are listed in Table 2.

TABLE 2—SUMMARY OF P–SMBP—ED RATE COMPONENTS

	Existing rates P–SED–F9/P–SED–FP9			Provisional rates P–SED–F10/ P–SED–FP10		
	Base component	Drought adder component	Total	Base component	Drought adder component	Total
Firm Capacity Rate (/kWmonth)	$3.65	$2.00	$5.65	$3.80	$3.00	$6.80
Firm Energy Rate (mills/kWh)	8.93	5.06	13.99	9.27	7.44	16.71
Firm Peaking Capacity Rate (/kWmonth)	$3.25	$1.85	$5.10	$3.40	$2.80	$6.20
Firm Peaking Energy Rate (mills/kWh)[1]	8.93	5.06	13.99	9.27	7.44	16.71

[1] Firm peaking energy is normally returned. This will be assessed in the event firm peaking energy is not returned.

As set forth in Table 2 above, provisional Rate Schedule P–SED–F10 has a firm capacity rate of $6.80/kWmonth and a firm energy rate of 16.71 mills/kWh. Under proposed Rate Schedule P–SED–FP10, the firm peaking capacity rate will increase to $6.20/kWmonth, or a 21.6 percent increase. Peaking energy is either returned to Western or paid for in accordance with the terms of the contract between Western and the peaking power customer.

Continuing to identify the firm electric service revenue requirement using Base and Drought Adder rate components will assist Western in presenting the effects of the drought within the P–SMBP, demonstrating repayment of the drought related costs, and allowing Western to be more responsive to changes in drought related expenses. Western will continue to charge and bill customers firm electric service rates for energy and capacity, which are the sum of the Base and Drought Adder rate components.

Western reviews its firm electric service rates annually. Western will review the Base rate component after the annual PRS is completed, generally in the first quarter of the calendar year. If an adjustment to the Base rate component is necessary, Western will initiate a public process pursuant to 10 CFR part 903 prior to making an adjustment.

In accordance with the original implementation of the Drought Adder rate component, Western will continue to review the Drought Adder rate component each September to determine if drought costs differ from those projected in the PRS. If drought costs differ, Western will determine if an adjustment to the Drought Adder rate component is necessary. Western will notify customers by letter each October of the planned incremental or decremental adjustment and implement the adjustment in the January billing cycle. Although decremental adjustments to the Drought Adder rate component will occur as drought costs are repaid, the adjustments cannot result in a negative Drought Adder rate component. To give customers advance notice, Western will conduct a preliminary review of the Drought Adder rate component in early summer and notify customers by letter of the estimated change to the Drought Adder rate component for the following January. Western will verify the final Drought Adder rate component adjustment by notification in the October letter to the customers. Implementing the Drought Adder rate component adjustment on January 1 of each year will help keep the drought deficits from escalating as quickly, will lower the interest expense due to drought deficits, will demonstrate responsible deficit management, and will provide prompt drought deficit repayments.

Western's current and Provisional Rate schedules provide for a formula-based adjustment of the Drought Adder rate component of up to 2 mills/kWh. The 2 mills/kWh cap is intended to place a limit on the amount the Drought Adder formula can be adjusted relative to associated drought costs without initiating a public process to recover costs attributable to the Drought Adder formula rate for any one-year cycle.

Statement of Revenue and Related Expenses

The following Table 3 provides a summary of projected revenue and expense data for the total P–SMBP, including both the Eastern and Western Divisions, firm electric service revenue requirement through the 5-year rate approval period.

The firm power rates for both divisions have been developed with the following revenues and expenses for the P–SMBP:

TABLE 3—TOTAL P–SMBP FIRM POWER COMPARISON OF 5-YEAR RATE PERIOD (FY 2009–2013) TOTAL REVENUES AND EXPENSES

	Current rate ($000)	Provisional rate ($000)	Difference ($000)
Total Revenues	2,124,002	2,417,497	293,495
Revenue Distribution			
Expenses:			
O&M	904,589	859,559	(45,030)
Purchased Power	155,654	431,180	275,526
Interest	528,272	639,356	111,084
Transmission	55,596	65,963	10,367
Total Expenses	1,644,111	1,996,058	351,947
Principal Payments:			
Capitalized Expenses (Deficits)[1]	150,549	351,517	200,968
Original Project and Additions[1]	263,052	1,546	(261,506)
Replacements[1]	3,314	2,704	(610)
Irrigation Aid	62,976	65,672	2,696
Total Principal Payments	479,891	421,439	(58,452)
Total Revenue Distribution	2,124,002	2,417,497	293,495

[1] Due to the deficit or near deficit conditions between 1999 and 2008, revenues generated in the cost evaluation period are applied toward repayment of deficits rather than repayment of project additions and replacements. All deficits are projected to be repaid by 2017.

Basis for Rate Development

The existing rates for P–SMBP—ED firm power in Rate Schedule P–SED–F9, which expire December 31, 2012, no longer provide sufficient revenues to pay all annual costs, including interest expense, and repay investment and irrigation aid within the allowable period. The adjusted rates reflect increases due to the economic impact of the drought, increased annual expenses, increased investments, and increased interest expense associated with investments and drought deficits. The Provisional Rates will provide sufficient revenue to pay all annual costs, including interest expense, and repay power investment and irrigation aid within the allowable periods. The Provisional Rates will take effect on February 1, 2009, and will remain in effect on an interim basis, pending FERC's confirmation and approval of them or substitute rates on a final basis, through December 31, 2013.

Emergency Fund Discussion

Due to continuing below-normal hydropower generation, Western may need to use the Continuing Fund (Emergency Fund) to pay for unanticipated purchase power and wheeling expenses necessary to meet its contractual obligations for the sale and delivery of power to its customers. Should Western use this funding mechanism, Western will replenish the Continuing Fund (Emergency Fund) in accordance with law and Western's current repayment policy.[2]

Comments

The comments and responses below regarding the firm and firm peaking electric service rates are paraphrased for brevity when not affecting the meaning of the statement(s). Direct quotes from comment letters are used for clarification when necessary.

The issues discussed are (1) Firm Power Rate and (2) MISO Markets.

1. Firm Power Rate

Comment: Western received numerous comments from customers stating that they understand the need for the rate increases and support the concept of the Drought Adder, which provides a set window during which drought-related expenses are repaid.

Response: Western appreciates the customer support received for the rate adjustment proposal. Western continues separation of the annual revenue requirement into Base and Drought Adder components.

Comment: Many comments were received from customers that showed appreciation for Western's commitment to keep power customers informed and involved throughout this rate process. Customers were grateful for past cost-cutting measures and encouraged Western's continued vigilance in keeping controllable costs as low as possible.

Response: Western is pleased with the level of customer interest and participation in the public meetings. Under the Flood Control Act of 1944, power is to be sold at the lowest possible rates consistent with sound business principles. Western is committed to keeping controllable costs as low as possible while continuing to deliver reliable cost-based hydroelectric power and related services.

Comment: Customers state that they are looking forward to working with Western's staff on the projected Base rate adjustments as they pertain to Western's draft Strategic Plan and Western's potential involvement in changes associated with MISO and SPP.

Response: Western's goal is to work closely with our customers throughout this rate, as well as any future rate adjustments. Changes to the Base Rate are made through a public process and allow for input.

Comment: Two customers were opposed to the firm peaking rate and questioned whether it reflects the costs associated with the drought and delivery of peaking power. It was noted that the firm peaking rate is being increased at approximately the same percentage rate as the firm power rate, which the commenting customers felt may not be fair and equitable. These customers wanted additional information regarding the firm peaking contracts so the impact on the rates can be better understood and evaluated. It was understood that Western allows peaking energy to be returned. They questioned under what terms and

[2] Western's Continuing Fund (Emergency Fund) Policy can be found at *http://www.wapa.gov/powerm/pdf/repaypolicy.pdf.*

conditions peaking customers are allowed to return energy and whether peaking energy is allowed to be returned off-peak. Customers asked if Western makes market purchases to fulfill Western's peaking contracts. The customers asked for assurance from Western that the firm peaking rate is fairly priced based on the nature of the product and its historical and future contributions to the bottom line.

Response: Western separated the firm and firm peaking rates and developed rate designs for both firm power and firm peaking power in the FRN published November 14, 2007 (72 FR ¶ 64067). In development of this firm peaking rate design, Western analyzed historical peaking data and concluded that this rate reflects the firm peaking customer's historical usage and their impact on the drought costs. During the current rate adjustment process, Western concluded that there has not been substantial change to the firm peaking usage or power markets since the introduction of the new firm peaking rate design that would support revisiting the rate design at this time. Western believes that both the firm and firm peaking customers are being treated equitably with the current rate designs. The firm peaking rate design accurately reflects the value and restrictions of the peaking product.

Comment: One customer would like to evaluate the voltage discount and was concerned that it may be too high in light of the recent drought-related increases. The concern was that billing amounts have grown since the voltage discount was put into place and now the discount may be too much in comparison to the actual cost.

Response: Historically, Western has provided a 5-percent voltage discount as a provision to the firm power rate schedule. The purpose of the discount is to provide the discount on firm power sales to customers who receive deliveries at higher transmission voltage and relieve Western of substation delivery costs. Reclamation began, and Western continues, the 5-percent voltage discount to customers meeting the criteria. Up to this time, Western has not been formally asked to change the discount percentage and has not evaluated the impacts of such a change on the firm power customers. Western is open to discussion among our customers and exploring options regarding the 5-percent voltage discount; but until additional customers request a review or modification of this provision, Western will continue applying the discount.

Comment: One customer recognized the impacts that the extended drought has had on the current financial status of the P–SMBP and expressed support for the proposed firm power rate increases. The customer also stated that the repayment of Federal investment through Federal power rates is taken very seriously. In the future, the Drought Adder will help to avoid a repetition of the financial impacts that are seen today.

Response: Western acknowledges the extended drought, its financial impacts, and the need for a firm power rate increase as well. The Drought Adder will allow Western to be more responsive to the changing hydrological conditions.

Comment: A customer representative acknowledged the financial challenges of this drought and made note of the difficulties Federal power customers are confronted with in fulfilling their financial responsibilities to the Federal government. They noted the good water years in the 1990s generated significant revenue surplus to P–SMBP financial requirements. Also noted was Western's administration of repayment according to repayment policies and the repayment of a significant amount of capital investment ahead of schedule. This early repayment benefitted both P–SMBP customers and the Federal government but left no financial resources to deal with drought. Thus, the current repayment practices and policies exacerbate the impacts of the natural swings in hydrology. When the drought deficit is repaid, there will still be a substantial amount of paid-ahead investments for the P–SMBP. The customer would like to work with Western to address this issue.

Response: Western acknowledges the financial impacts of the current drought and believes the ratemaking policy of identifying the Base and Drought Adder components will make the rates more responsive to hydrological changes caused by both drought and flush water years. The Drought Adder component may be adjusted annually up to 2 mills/kWh without a public process to quickly address drought impacts, and the Base Rate component can only be adjusted through a public process. This practice will lower interest expense due to drought deficits and demonstrate responsible deficit management. Western acknowledges the customer group statements regarding Western's adherence to repayment policies and the associated repayment of a significant amount of capital investment ahead of schedule in the 1990s. Prepayment is an integral part of the long-term plan for P–SMBP and has provided rate stability for consumers while meeting Federal repayment obligations. The ability to reduce the Drought Adder rate component when normal hydrological conditions return to P–SMBP will allow appropriate recognition of repayment obligations. Western appreciates the customers' support and willingness to work with Western and will continue to discuss issues, impacts, and possible solutions with the customers.

2. MISO Markets

Comment: Western has received numerous comments concerning the issue of whether to join MISO and its Day Two Markets. The comments support a thorough review of costs and benefits to all of Western's customers before a change is made. Comments suggest that administrative costs associated with the Day Two Markets may impose a significant burden, especially on smaller customers. There were concerns that if Western joins MISO and other area transmission owners that serve the customers join SPP there could be significant cost issues associated with the delivery of Western's allocation to Preference customer loads. Comments stated that if there are benefits to participating in the Day Two Market those benefits should flow to all of Western's customers, not just those that participate in joint dispatching arrangements inside the Integrated System. Concerns are that costs associated to deliver Western's allocations to the edge of the system should be recovered as part of the total system transmission rate recovery, as it has been done in the past.

Response: This comment is not directly related to the proposed rate action. However, Western is actively addressing these issues as well as other options and evaluating them based on costs and benefits to Western's customers.

Comment: A commenter noted that MISO intends to start an ancillary service market; and when that occurs, Western has preference power customers that are served in the MISO footprint. The question was asked does Western have avoided costs due to the MISO market providing those ancillary services; specifically, are there avoided costs in Schedule 3, Regulation and Frequency Response; Schedule 5, Operating Reserves Spinning; and Schedule 6, Operating Reserves Supplemental.

Response: This comment is not directly related to the proposed rate action. Western is actively evaluating its obligations to customers in the MISO Ancillary Services Market footprint. As Western moves forward in evaluating the impacts on market participation and changes for customers, Western will

seek input from customers and will continue to keep customers informed of decisions regarding these matters.

Availability of Information

Information about this rate adjustment, including the PRS, comments, letters, memorandums, and other supporting materials that was used to develop the Provisional Rates is available for public review in the Upper Great Plains Regional Office, Western Area Power Administration, 2900 4th Avenue North, Billings, Montana.

Ratemaking Procedure Requirements

Environmental Compliance

In compliance with the National Environmental Policy Act (NEPA) of 1969, 42 U.S.C. 4321–4347; Council on Environmental Quality Regulations (40 CFR parts 1500–1508); and DOE NEPA Regulations (10 CFR part 1021), Western has determined that this action is categorically excluded from preparing of an environmental assessment or an environmental impact statement.

Determination Under Executive Order 12866

Western has an exemption from centralized regulatory review under Executive Order 12866; accordingly, no clearance of this notice by the Office of Management and Budget is required.

Submission to the Federal Energy Regulatory Commission

The Provisional Rates herein confirmed, approved, and placed into effect, together with supporting documents, will be submitted to FERC for confirmation and final approval.

Order

In view of the foregoing and under the authority delegated to me, I confirm and approve on an interim basis, effective February 1, 2009, Rate Schedules P–SED–F10 and P–SED–FP10 for the Pick-Sloan Missouri Basin Program—Eastern Division Project of the Western Area Power Administration. These rate schedules shall remain in effect on an interim basis, pending FERC's confirmation and approval of them or substitute rates on a final basis through December 31, 2013.

Dated: January 8, 2009.

Jeffrey F. Kupfer,

Acting Deputy Secretary.

Rate Schedule P–SED–F10
(Supersedes Schedule P–SED–F9)
Effective February 1, 2009

United States Department of Energy, Western Area Power Administration

Pick-Sloan Missouri Basin Program—Eastern Division Montana, North Dakota, South Dakota, Minnesota, Iowa, Nebraska

Schedule of Rates for Firm Power Service

(Approved Under Rate Order No. WAPA–140)

Effective: The first day of the first full billing period beginning on or after February 1, 2009, through December 31, 2013.

Available: Within the marketing area served by the Eastern Division of the Pick-Sloan Missouri Basin Program.

Applicable: To the power and energy delivered to customers as firm power service.

Character: Alternating current, 60 hertz, three phase, delivered and metered at the voltages and points established by contract.

Monthly Rates

Demand Charge: $6.80 for each kilowatt per month (kWmonth) of billing demand.

Energy Charge: 16.71 mills per kilowatthour (kWh) for all energy delivered as firm power service.

Billing Demand: The billing demand will be as defined by the power sales contract.

Charge Components

Base: A fixed revenue requirement that includes operation and maintenance expense, investments and replacements, interest on investments and replacements, normal timing purchase power costs (purchases due to operational constraints, not associated with drought), and transmission costs. The Base revenue requirement is $163.5 million.

$$\text{Base Demand} = \frac{50\% \times \text{Base Revenue Requirement}}{\text{Firm Metered Billing Units}} = \$3.80/\text{kW month}$$

$$\text{Base Energy} = \frac{50\% \times \text{Base Revenue Requirement}}{\text{Annual Energy}} = \$9.27 \text{ mills/kWh}$$

Drought Adder: A formula-based revenue requirement that includes future purchase power expense excluding timing purchases, previous purchase power drought deficits, and interest on the purchase power drought deficits. For the period beginning February 1, 2009, the Drought Adder revenue requirement is $130.6 million.

$$\text{Drought Adder Demand} = \frac{50\% \times \text{Drought Adder Revenue Requirement}}{\text{Firm Metered Billing Units}} = \$3.00/\text{kW month}$$

$$\text{Drought Adder Energy} = \frac{50\% \times \text{Drought Adder Revenue Requirement}}{\text{Annual Energy}} = \$7.44 \text{ mills/kWh}$$

Process: Any proposed change to the Base component will require a public process. The Drought Adder component may be adjusted annually using the above formula for any costs attributed to drought of less than or equal to the equivalent of 2 mills/kWh to the Power Repayment Study (PRS) composite rate. Any planned incremental adjustment to the Drought Adder component greater than the equivalent of 2 mills/kWh to the PRS composite rate will require a public process.

Adjustments

For Drought Adder: Adjustments pursuant to the Drought Adder

component will be documented in a revision to this rate schedule.

For Character and Conditions of Service: Customers who receive deliveries at transmission voltage may in some instances be eligible to receive a 5-percent discount on demand and energy charges when facilities are provided by the customer that results in a sufficient savings to Western to justify the discount. The determination of eligibility for receipt of the voltage discount shall be exclusively vested in Western.

For Billing of Unauthorized Overruns: For each billing period in which there is a contract violation involving an unauthorized overrun of the contractual firm power and/or energy obligations, such overrun shall be billed at 10 times the above rate.

For Power Factor: None. The customer will be required to maintain a power factor at the point of delivery between 95 percent lagging and 95 percent leading.

Rate Schedule P–SED–FP10

(Supersedes Schedule P–SED–FP9)

Effective February 1, 2009

United States Department of Energy, Western Area Power Administration

Pick-Sloan Missouri Basin Program—Eastern Division Montana, North Dakota, South Dakota, Minnesota, Iowa, Nebraska;

Schedule of Rates for Firm Peaking Power Service

(Approved Under Rate Order No. WAPA–140)

Effective: The first day of the first full billing period beginning on or after February 1, 2009, through December 31, 2013.

Available: Within the marketing area served by the Eastern Division of the Pick-Sloan Missouri Basin Program, to customers with generating resources enabling them to use firm peaking power service.

Applicable: To the power sold to customers as firm peaking power service.

Character: Alternating current, 60 hertz, three phase, delivered and metered at the voltages and points established by contract.

Monthly Rates

Demand Charge: $6.20 for each kilowatt per month (kWmonth) of the effective contract rate of delivery for peaking power or the maximum amount scheduled, whichever is greater.

Energy Charge: 16.71 mills for each kilowatthour (kWh) for all energy scheduled for delivery without return.

Charge Components

Base: A fixed revenue requirement that includes operation and maintenance expense, investment and replacements, normal timing purchase power costs (purchases due to operational constraints, not associated with drought), and transmission costs. The Base peaking revenue requirement is $14.5 million.

$$\text{Base Demand} = \frac{\text{Base Peaking Demand Revenue Requirement}}{\text{Peaking CROD Billing Units}} = \$3.40/\text{kW month}$$

Energy [1] = 9.27 mills/kWh

Drought Adder: A formula-based revenue requirement that includes future purchase power above timing purchases, previous purchase power drought deficits, and interest on the purchase power drought deficits. For the period beginning February 1, 2009, the Drought Adder peaking revenue requirement is $12.0 million.

$$\text{Drought Adder Demand} = \frac{\text{Drought Adder Peaking Demand Revenue Requirement}}{\text{Peaking CROD Billing Units}} = \$2.80/\text{kW month}$$

Energy [1] = 7.44 mills/kWh

Process:

Any proposed change to the Base component will require a public process. The Drought Adder component may be adjusted annually using the above formula for any costs attributed to drought of less than or equal to the equivalent of 2 mills/kWh to the Power Repayment Study (PRS) composite rate. Any planned incremental adjustment to the Drought Adder component greater than the equivalent of 2 mills/kWh to the PRS composite rate will require a public process.

Billing Demand: The billing demand will be the greater of: (1) The highest 30-minute integrated demand measured during the month up to, but not in excess of, the delivery obligation under the power sales contract, or (2) the contract rate of delivery.

Adjustments

For Drought Adder: Adjustments pursuant to the Drought Adder component will be documented in a revision to this rate schedule.

Billing for Unauthorized Overruns: For each billing period in which there is a contract violation involving an unauthorized overrun of the contractual obligation for peaking demand and/or energy, such overrun shall be billed at 10 times the above rate.

[FR Doc. E9–892 Filed 1–15–09; 8:45 am]

BILLING CODE 6450–01–P

[1] Firm peaking energy is normally returned. This rate will be assessed in the event firm peaking energy is not returned.

ENVIRONMENTAL PROTECTION AGENCY

[AMS–FRL–8762–9]

California State Nonroad Engine and Vehicle Pollution Control Standards; Authorization of Transport Refrigeration Unit Engine Standards, Notice of Decision

AGENCY: Environmental Protection Agency (EPA).

ACTION: Notice of Decision for Authorization of California Transport Refrigeration Unit In-use Engine Emission Standards.

SUMMARY: EPA today, pursuant to section 209(e) of the Clean Air Act (Act), 42 U.S.C. 7543(e), is granting California its request for authorization to enforce its Airborne Toxic Control measure (ATCM) establishing in-use emission performance standards for engines in

transport refrigeration units (TRUs) and TRU generator sets that will be phased-in commencing in December 31, 2008.

ADDRESSES: The Agency's Decision Document, containing an explanation of the Assistant Administrator's decision, as well as all documents relied upon in making that decision, including those submitted to EPA by California, are available for public inspection in EPA Air and Radiation Docket and Information Center (Air Docket). Materials relevant to this decision are contained in Docket OAR–2005–0123 at the following location: EPA Air Docket, Room 3334, 1301 Constitution Avenue, NW., Washington, DC, 20460. The EPA Docket Center Public Reading Room is open from 8 a.m. to 5:30 p.m. Monday through Friday, except on government holidays. The Air Docket telephone number is (202) 566–1742, and the facsimile number is (202) 566–1741. You may be charged a reasonable fee for photocopying docket materials, as provided in 40 CFR part 2.

Additionally, an electronic version of the public docket is available through the Federal government's electronic public docket and comment system. You may access EPA dockets at *http://www.regulations.gov.* After opening the *http://www.regulations.gov* Web site, select ''Environmental Protection Agency'' from the pull-down Agency list, then scroll to ''Keyword or ID'' and enter EPA–HQ–OAR–2005–0123 to view documents in the record of this TRU Authorization Request docket. Although a part of the official docket, the public docket does not include Confidential Business Information (CBI) or other information whose disclosure is restricted by statute.

EPA makes available an electronic copy of this Notice via the Internet on the Office of Transportation and Air Quality (OTAQ) homepage *(http://www.epa.gov/OTAQ).* Users can find this document by accessing the OTAQ homepage and looking at the path entitled ''**Federal Register** Notices.'' This service is free of charge, except any cost you already incur for Internet connectivity. Users can also get the official **Federal Register** version of the Notice on the day of publication on the primary Web site: *(http://www.epa.gov/docs/fedrgstr/EPA-AIR)* Please note that due to differences between the software used to develop the documents and the software into which the documents may be downloaded, changes in format, page length, etc., may occur.

FOR FURTHER INFORMATION CONTACT: Robert M. Doyle, Attorney-Advisor, Office of Transportation and Air Quality, (6403J), U.S. Environmental Protection Agency, 1200 Pennsylvania Avenue, NW., Washington, DC 20460 (U.S. mail), 1310 L Street, NW., Washington, DC 20005 (courier mail). Telephone: (202) 343–9258, Fax: (202) 343–2804, E-Mail: *doyle.robert@epa.gov.*

SUPPLEMENTARY INFORMATION:

I. Background

A. Nonroad Authorizations

Section 209(e)(1) of the Act addresses the permanent preemption of any State, or political subdivision thereof, from adopting or attempting to enforce any standard or other requirement relating to the control of emissions for certain new nonroad engines or vehicles.[1] Section 209(e)(2) of the Act requires the Administrator, after notice and opportunity for public hearing, to grant California authorization to enforce state standards for new nonroad engines or vehicles which are not listed under section 209(e)(1), subject to certain restrictions. On July 20, 1994, EPA promulgated a regulation that sets forth, among other things, the criteria, as found in section 209(e)(2), by which EPA must consider any California authorization requests for new nonroad engines or vehicle emission standards (section 209(e) rules).[2] This regulation, previously codified at 40 CFR Part 85, Subpart Q, and, effective December 8, 2008, codified at 40 CFR Part 1074, provides:

(a) The Administrator shall grant the authorization if California determines that its standards will be, in the aggregate, at least as protective of public health and welfare as applicable Federal standards.

(b) The authorization shall not be granted if the Administrator finds that:

(1) The determination of California is arbitrary and capricious;

(2) California does not need such California standards to meet compelling and extraordinary conditions; or

(3) California standards and accompanying enforcement procedures are not consistent with section 209.

As stated in the preamble to the section 209(e) rule, EPA has interpreted the requirement regarding whether ''California standards and accompanying enforcement procedures are not consistent with section 209'' to mean that California standards and accompanying enforcement procedures must be consistent with section 209(a), section 209(e)(1), and section 209(b)(1)(C), as EPA has interpreted that subsection in the context of motor vehicle waivers.[3] In order to be consistent with section 209(a), California's nonroad standards and enforcement procedures must not apply to new motor vehicles or new motor vehicle engines. Secondly, California's nonroad standards and enforcement procedures must be consistent with section 209(e)(1), which identifies the categories permanently preempted from state regulation.[4] California's nonroad standards and enforcement procedures would be considered inconsistent with section 209 if they applied to the categories of engines or vehicles identified and preempted from State regulation in section 209(e)(1).

Finally, because California's nonroad standards and enforcement procedures must be consistent with section 209(b)(1)(C), EPA will review nonroad authorization requests under the same ''consistency'' criteria that are applied to motor vehicle waiver requests. Under section 209(b)(1)(C), the Administrator shall not grant California a motor vehicle waiver if he finds that California ''standards and accompanying enforcement procedures are not consistent with section 202(a)'' of the

[1] Section 209(e)(1) of the Act provides:

No State or any political subdivision thereof shall adopt or attempt to enforce any standard or other requirement relating to the control of emissions from either of the following new nonroad engines or nonroad vehicles subject to regulation under this Act—

(A) New engines which are used in construction equipment or vehicles or used in farm equipment or vehicles and which are smaller than 175 horsepower.

(B) New locomotives or new engines used in locomotives. Subsection (b) shall not apply for purposes of this paragraph.

[2] *See* 59 FR 36969 (July 20, 1994), and regulations set forth therein, 40 CFR Part 85, Subpart Q, §§ 85.1601–85.1606. EPA recently moved these regulations, without changing their substance to 40 CFR Part 1074. *See* 73 FR 59033, 59279 (October 8, 2008).

[3] *See* 59 FR 36969, 36983 (July 20, 1994).

[4] Section 209(e)(1) of the Act has been implemented *See* 40 CFR Part 85, Subpart Q, §§ 85.1602, 85.1603 and, effective December 8, 2008, 40 CFR Part 1074, §§ 1074.10, 1074.12.

§ 1074.10 provides in applicable part:

(a) States are preempted from adopting or enforcing standards or other requirements relating to the control of emissions from new engines smaller than 175 horsepower that are primarily used in farm or construction equipment or vehicles, as defined in this part. For equipment that is used in applications in addition to farming or construction activities, if the equipment is primarily used as farm and/or construction equipment or vehicles (as defined in this part), it is considered farm or construction equipment or vehicles.

§ 1074.5 provides definitions of terms used in § 1074.10 and states in applicable part:

Construction equipment or vehicle means any internal combustion engine-powered machine primarily used in construction and located on commercial construction sites.

Farm Equipment or Vehicle means any internal combustion engine-powered machine primarily used in the commercial production and/or commercial harvesting of food, fiber, wood, or commercial organic products or for the processing of such products for further use on the farm.

Primarily used means used 51 percent or more.

Act. Previous decisions granting waivers of Federal preemption for motor vehicles have stated that State standards are inconsistent with section 202(a) if there is inadequate lead time to permit the development of the necessary technology giving appropriate consideration to the cost of compliance within that time period or if the Federal and State test procedures impose inconsistent certification requirements.[5]

With regard to enforcement procedures accompanying standards, EPA must grant the requested authorization unless it finds that these procedures may cause the California standards, in the aggregate, to be less protective of public health and welfare than the applicable Federal standards promulgated pursuant to section 213(a), or unless the Federal and California certification test procedures are inconsistent.[6]

Once California has received an authorization for its standards and enforcement procedures for a certain group or class of nonroad equipment engines or vehicles, it may adopt other conditions precedent to the initial retail sale, titling or registration of these engines or vehicles without the necessity of receiving an additional authorization.[7]

If California acts to amend a previously authorized standard or accompanying enforcement procedure, the amendment may be considered within the scope of a previously granted authorization provided that it does not undermine California's determination that its standards in the aggregate are as protective of public health and welfare as applicable Federal standards, does not affect the consistency with section 209 of the Act, and raises no new issues affecting EPA's previous authorization determination.[8]

B. CARB's Authorization Request

CARB, by letter dated March 28, 2005, requested that EPA grant California an authorization to adopt and enforce new regulations which establish in-use performance standards for diesel-fueled TRUs and TRU generator sets which operate in California, and facilities where TRUs operate. The TRU regulations are contained in an Airborne Toxic Control Measure (ATCM) adopted by CARB to reduce the general public's exposure to diesel particulate matter (PM), other toxic airborne contaminants (TACs) and air pollutants generated by TRUs and reduce near source risk at facilities where TRUs congregate. TRUs are refrigeration systems powered by internal combustion engines (almost always diesel-powered) which control the environment of temperature-sensitive products (perishable food and commodities) that are transported in semi-trailer vans, truck vans, ''reefer' railcars or shipping containers. The engines in TRUs do not propel the vehicle, but are used strictly to power the refrigeration system. TRU generator sets are designed and used to provide electric power to electrically driven refrigeration units of any kind. These TRU engines are nonroad engines; they do not propel the vehicle, but are used strictly to power the refrigeration system. TRU engines vary in horsepower generally from 7 hp to 36 hp, with the most common size being 35 hp.[9]

Owners/operators of TRUs that operate in California must comply with the in-use performance standards; this applies to TRUs registered in California and outside of California, even if the in-California use is minimal. Most of the engines used in TRUs are already subject to Federal and California emission standards as new engines. New TRU engines less than 25 hp became subject to CARB standards in 1995 and EPA standards in 2000, and engines equal to or greater than 25 hp but less than 50 hp became subject to EPA standards in 1999 and to CARB standards in 2000.

These new CARB regulations will affect in-use TRU engines by requiring the in-use TRU engines to meet specific performance standards that vary by HP range, and have two levels of stringency that are phased in over time—the Low Emission TRU (LETRU) Standards, beginning in 2008, and the Ultra-Low Emission TRU (ULETRU) Performance Standard beginning in 2010. The ATCM requires owners of TRUs to meet more stringent performance standards at 7-year intervals until the TRU meets the Ultra-Low emission performance standards, and the timing depends on the original Model Year of the engine. The TRU in-use standards correlate to the EPA Tier 4 Nonroad CI standards; the LETRU standards are the EPA Interim standards and the ULETRU standards are the EPA long-term standards.

The TRU regulations offer several ways that owners/operators can comply. The owner/operator may:

(1) Elect to show that the existing TRU is equipped with an engine that meets the EPA Tier IV certification standard for new non-road engines;

(2) Repower the TRU system by replacing the existing TRU engine with an engine that meets the EPA Tier IV standard for new engines;

(3) Replace an existing TRU with a newer TRU that is equipped with an engine that meets the EPA tier IV certificate standard for new engines;

(4) Retrofit an existing TRU engine using a CARB approved verified diesel emission control strategy (VDECS);

(5) Use an Alternative Technology approved by CARB.[10]

Owners/Operators of TRU engines 25 hp and over can choose any of the compliance options listed above. Owners/Operators of TRU engines under 25 hp will need to choose either the retrofit option, or the alternative technology option to meet the ULETRU requirement. This is because currently there is no Tier-4 aligned (i.e. after treatment-forcing) EPA standard for engines under 25 hp, so there is no Tier-4 aligned engine certification compliance option available to meet the ULETRU in-use standard.[11]

As required by the Act, EPA offered the opportunity for a public hearing and requested public comments on these new standards by publication of a **Federal Register** notice to such effect on November 21, 2005.[12] EPA received a request for a hearing from the American Trucking Association, and from the

[5] To be consistent, the California certification procedures need not be identical to the Federal certification procedures. California procedures would be inconsistent, however, if manufacturers would be unable to meet both the state and the Federal requirement with the same test vehicle in the course of the same test. *See, e.g.*, 43 FR 32182 (July 25, 1978).

[6] *See, e.g.*, *Motor and Equipment Manufacturers Association, Inc.* v. *EPA,* 627 F.2d 1095, 1111–14 (D.C. Cir. 1979), *cert. denied,* 446 U.S. 952 (1980) *(MEMA I);* 43 FR 25729 (June 14, 1978). While inconsistency with section 202(a) includes technological feasibility, lead time, and cost, these aspects are typically relevant only with regard to standards. The aspect of consistency with 202(a) which is of primary applicability to enforcement procedures (especially test procedures) is test procedure consistency.

[7] *See* 43 FR 36679, 36680 (August 18, 1978).

[8] Decision Document, Dockets A–2000–05 to 08, entry V–B–1, p. 10.

[9] CARB TRU Authorization Request, Initial Statement of Reasons, Docket Entry OAR–2005–0123–0005, p. E–2.

[10] CARB identifies these ''Alternative technologies'' as including but not limited to the use of electric standby, cryogenic temperature control systems, alternative fuel, alternative diesel fuel, fuel cell power, or any other system approved by the CARB Executive Officer to not emit diesel PM or increase public health risk while at a facility. Alternative technologies only qualify toward compliance with the ULETRU in-use performance standard requirement if they eliminate diesel operation at facilities. CARB TRU Authorization Request, Initial Statement of Reasons, Docket Entry OAR–2005–0123–0005, p. VII–7.

[11] CARB Request Letter and Support Document, Docket Entry OAR–2005–0123–0002, p. 6.

[12] 70 FR 70075 (November 21, 2005), Docket Entry OAR–2005–0123–0001.

Truck Rental and Leasing Association,[13] and a hearing was held on January 23, 2006.[14] In addition, EPA received written comments for the Docket of this proceeding from several commenters, including additional submissions from CARB and some of the parties who testified at the public hearing, submissions from the Owner-Operators Independent Drivers Association, the Truckload Carriers Association, the California Trucking Association, the Pacific Merchant Shipping Association, and the Agricultural and Food Transporters Conference of American Trucking Associations, and a supplemental submission from CARB responding to matters raised by some industry parties in their written comments.[15] Accordingly, EPA has made this authorization decision based on the information submitted by CARB in its requests, and the information presented to the Agency at the public hearing and in the comments received after the hearing.

C. Authorization Decision

EPA received hearing testimony and written comments from industry parties who opposed the CARB request for authorization request on various grounds. After review of the information submitted by CARB and other parties to the record of this Docket, however, EPA finds that those opposing the authorization request have not met the burden of demonstrating that California's regulations do not satisfy the statutory criteria of section 209(e). For this reason, EPA is granting California authorization to enforce its TRU ATCM regulations. A full explanation of EPA's decision, including our review of comments received, is contained in our Decision Document, which may be obtained as explained above in the ''Addresses'' section of this Notice.

My decision will affect not only persons in California but also persons outside the State who would need to comply with California's TRU ATCM regulations to enter California with such engines. For this reason, I hereby determine and find that this is a final action of national applicability.

Under section 307(b)(1) of the Act, judicial review of this final action may be sought only in the United States Court of Appeals for the District of Columbia Circuit. Petitions for review must be filed by March 17, 2009. Under section 307(b)(2) of the Act, judicial review of this final action may not be obtained in subsequent enforcement proceedings.

As with past authorization decisions, this action is not a rule as defined by Executive Order 12866. Therefore, it is exempt from review by the Office of Management and Budget as required for rules and regulations by Executive Order 12866.

In addition, this action is not a rule as defined in the Regulatory Flexibility Act, 5 U.S.C. 601(2). Therefore, EPA has not prepared a supporting regulatory flexibility analysis addressing the impact of this action on small business entities.

The Congressional Review Act, 5 U.S.C. 801 *et seq.*, as added by the Small Business Regulatory Enforcement Fairness Act of 1996, does not apply because this action is not a rule, for purposes of 5 U.S.C. 804(3).

Finally, the Administrator has delegated the authority to make determinations regarding authorizations under section 209(e) of the Act to the Assistant Administrator for Air and Radiation.

Dated: January 9, 2009.

Robert J. Meyers,

Principal Deputy Assistant Administrator for Air and Radiation.

[FR Doc. E9–907 Filed 1–15–09; 8:45 am]

BILLING CODE 6560–50–P

[13] Letter from Glenn P. Kedzie, American Trucking Association to Robert M. Doyle, USEPA, dated January 27, 2005, Docket Entry 2005–0123–0014, and letter from Thomas James, Truck Rental and Leasing Association to Robert M. Doyle, USEPA, dated December 1, 2005, Docket entry OAR–2005–0123–0015.

[14] EPA received testimony from: Michael Terris, Anthony Andreoni and Rod Hill, California Air Resources Board; Robert Digges, American Trucking Association; Corey England, C.R. England Co.; James Lyons, Sierra Research; Thomas James, Truck Rental and leasing Association, Andrew Stopka, National Lease Company; Thomas Richichi, Beveridge & Diamond Law Firm, on behalf of the American Trucking Association, and John Kaburick, Earl L. Henderson Trucking Company and on behalf of the Truckload Carriers Association. Written statements presented at this hearing and the hearing transcript appear in the Docket as Docket Entries OAR–2005–0123–0013 and OAR–2005–0123–0017 through OAR–2005–0123–0023.

[15] These comments can be found in the Docket as Docket entries OAR–2005–0123–0024 through OAR–2005–0123–0031.

ENVIRONMENTAL PROTECTION AGENCY

[ER–FRL–8589–6]

Environmental Impact Statements and Regulations; Availability of EPA Comments

Availability of EPA comments prepared pursuant to the Environmental Review Process (ERP), under section 309 of the Clean Air Act and Section 102(2)(c) of the National Environmental Policy Act as amended. Requests for copies of EPA comments can be directed to the Office of Federal Activities at 202–564–7146. An explanation of the ratings assigned to draft environmental impact statements (EISs) was published in FR dated April 6, 2008 (73 FR 19833).

Draft EISs

EIS No. 20080445, ERP No. D–FTA–K59008–CA, Berkeley/Albany Ferry Terminal Study, Proposing to Implement New Ferry Service between Berkeley/Albany and the San Francisco Ferry Building, Funding, San Francisco Water Transit Authority (WETA), Berkeley/Albany, CA.

Summary: EPA expressed environmental concerns about biological resource and dredging impacts. Rating EC2.

Final EISs

EIS No. 20080438, ERP No. F–FHW–K50014–CA, Doyle Drive Project, South Access to the Golden Gate Bridge, Propose to Improve Seismic, Structural, and Traffic Safety, Presidio of San Francisco, San Francisco County Transportation Authority, Marin and San Francisco Counties, CA.

Summary: EPA continues to have environmental concerns about traffic and localized air quality impacts due to the scale and duration of construction activities.

EIS No. 20080476, ERP No. F–COE–G39047–00, White River Minimum Flow Study, To Provide an Improved Minimum Flow for the Benefit of the Tail Water Fishery, White River Basin Lakes: Bull Shoal Lakes on the White River; Norfork Lake on the North Fork White River, AR.

Summary: No formal comment letter was sent to the preparing agency.

EIS No. 20080482, ERP No. F–DOE–A09800–00, PROGRAMMATIC—Designation of Energy Corridors in 11 Western States, Preferred Location of Future Oil, Gas, and Hydrogen Pipelines and Electricity Transmission and Distribution Facilities on Federal Land, AZ, CA, CO, ID, MT, NV, NM, UT, WA, and WY.

Summary: While the final Programmatic EIS provided additional information on the interagency operating procedures (IOPs) and impacts to visual resources areas, EPA continues to have environmental concerns about the potential impacts to wetlands in the designated corridors.

EIS No. 20080483, ERP No. F–FHW–D40184–MO, MO–34 Improvement,

from U.S. Routes 60/21 Intersection in Carter County to Routes 34/72 Intersection in Cape Girardeau County, Funding, U.S. Army COE Section 404 Permit, Carter, Bollinger, Reynolds, Wayne, and Cape Girardeau Counties, MO.

Summary: EPA does not object to the proposed action; however, we requested clarification on the number and length of jurisdictional streams.

EIS No. 20080490, ERP No. F–BPA–L91030–WA, Lyle Falls Fish Passage Project, To Improve Fish Passage to Habitat in the Upper Part of the Watershed, Located on the Lower Klickitat River, Klickitat County, WA.

Summary: The Final EIS adequately responded to our previous comments; therefore, EPA does not object to the preferred action.

EIS No. 20080493, ERP No. F–BLM–G65105–NM, Socorro Resource Management Plan Revision, Implementation, Socorro and Catron Counties, NM.

Summary: No formal comment letter was sent to the preparing agency.

EIS No. 20080500, ERP No. F–DHS–A10077–00, National Bio and Agro-Defense Facility, Preferred Alternative is (2) Manhattan Campus Site, Propose to Site, Construct and Operate at one of the Proposed Locations: (1) South Milledge Avenue Site, Clarke County, GA; (2) Manhattan Campus Site, Riley County, KS; (3) Flora Industrial Park Site, Madison County, MS; (4) Plum Island Site, Suffolk County, NY; (5) Umstead Research Park Site, Granville County, NC; and (6) Texas Research Park Site, Bexar and Medina Counties, TX.

Summary: No formal comment letter was sent to the preparing agency.

Dated: January 13, 2009.

Robert W. Hargrove,

Director, NEPA Compliance Division, Office of Federal Activities.

[FR Doc. E9–908 Filed 1–15–09; 8:45 am]

BILLING CODE 6560–50–P

ENVIRONMENTAL PROTECTION AGENCY

[ER–FRL–8589–05]

Environmental Impacts Statements; Notice of Availability

Responsible Agency: Office of Federal Activities, General Information (202) 564–1399 or *http://www.epa.gov/compliance/nepa/.*

Weekly receipt of Environmental Impact Statements.

Filed 01/05/2009 through 01/09/2009.

Pursuant to 40 CFR 1506.9.

EIS No. 20090001, Final EIS, FHW, IA, Southeast (SE) Connector in Des Moines, Iowa, To Provide a Safe and Efficient Link between the MLK Jr. Parkway at SE 14th Street to the U.S. 65 Bypass, Funding, U.S. Army COE Section 404 and NPDES Permits, Polk County, IA, *Wait Period Ends:* 02/17/2009, *Contact:* Philip Barnes 515–233–7300.

EIS No. 20090002, Draft EIS, USN, VA, Norfolk Harbor Channel, Proposed Dredging to Deepen Five Miles of the Federal Navigation Channel in the Elizabeth River from Lamberts Bend to the Norfolk Naval Shipyard (NNS), Norfolk and Portsmouth, VA, *Comment Period Ends:* 03/02/2009, *Contact:* John Conway 904–542–6159.

EIS No. 20090003, Final EIS, FHW, NY, Fort Drum Connector Route Project, Proposed Link between I–81 and U.S. Route 11 at the Fort Drum North Gate, Town of Le Ray and Pamela, Jefferson County, NY, *Wait Period Ends:* 02/17/2009, *Contact:* Jeffrey W. Kalb 518–431–4127.

EIS No. 20090004, Draft EIS, NPS, MO, Jefferson National Expansion Memorial, General Management Plan, Implementation, St. Louis, MO, *Comment Period Ends:* 03/16/2009, *Contact:* Tom Bradley 314–655–1600.

EIS No. 20090005, Draft EIS, BLM, CO, Red Cliff Mine Project, Construct a New Underground Coal Mine on Private and Federal Lands, Federal Coal Lease by Application, Mesa and Garfield County, CO, *Comment Period Ends:* 03/16/2009, *Contact:* Glenn Wallace 303–239–3736.

EIS No. 20090006, Final EIS, MMS, 00, Cape Wind Energy Project, Construction, Operation and Maintenance, and Decommissioning of an Electric Generation Facility, Barnstable, Nantucket and Duke Counties, MA and Washington County, RI, *Wait Period Ends:* 02/17/2009, *Contact:* Dr. Rodney E. Cluck 703–787–1087.

Dated: January 13, 2009.

Robert W. Hargrove,

Director, NEPA Compliance Division, Office of Federal Activities.

[FR Doc. E9–902 Filed 1–15–09; 8:45 am]

BILLING CODE 6560–50–P

FEDERAL COMMUNICATIONS COMMISSION

Notice of Public Information Collection(s) Being Reviewed by the Federal Communications Commission, Comments Requested

January 9, 2009.

SUMMARY: The Federal Communications Commission, as part of its continuing effort to reduce paperwork burden invites the general public and other Federal agencies to take this opportunity to comment on the following information collection(s), as required by the Paperwork Reduction Act (PRA) of 1995, 44 U.S.C. 3501–3520. An agency may not conduct or sponsor a collection of information unless it displays a currently valid control number. No person shall be subject to any penalty for failing to comply with a collection of information subject to the Paperwork Reduction Act (PRA) that does not display a valid control number. Comments are requested concerning (a) whether the proposed collection of information is necessary for the proper performance of the functions of the Commission, including whether the information shall have practical utility; (b) the accuracy of the Commission's burden estimate; (c) ways to enhance the quality, utility, and clarity of the information collected; and (d) ways to minimize the burden of the collection of information on the respondents, including the use of automated collection techniques or other forms of information technology.

DATES: Written Paperwork Reduction Act (PRA) comments should be submitted on or before March 17, 2009. If you anticipate that you will be submitting PRA comments, but find it difficult to do so within the period of time allowed by this notice, you should advise the FCC contact listed below as soon as possible.

ADDRESSES: Direct all PRA comments to Nicholas A. Fraser, Office of Management and Budget, (202) 395–5887, or via fax at 202–395–5167 or via internet at *Nicholas_A._Fraser@omb.eop.gov* and to *Judith-B.Herman@fcc.gov,* Federal Communications Commission, and an e-mail to *PRA@fcc.gov.*

FOR FURTHER INFORMATION CONTACT: For additional information, contact Judith B. Herman at 202–418–0214 or via the Internet at *Judith-B.Herman@fcc.gov.*

SUPPLEMENTARY INFORMATION:

OMB Control Number: 3060–0718.

Title: Part 101, Governing the Terrestrial Microwave Fixed Radio Service.

Form No.: N/A.

Type of Review: Extension of a currently approved collection.

Respondents: Business or other for-profit entities, not-for-profit institutions, and state, local, or tribal government.

Number of Respondents: 9,500 respondents; 7,502 responses.

Estimated Time Per Response: .25–3 hours.

Frequency of Response: On occasion and every 10-years, reporting requirements, recordkeeping requirements, and third-party disclosure requirements.

Obligation to Respond: Required to obtain or retain benefits.

Total Annual Burden: 35,242 hours.

Total Annual Cost: $553,000.

Privacy Act Impact Assessment: N/A.

Nature and Extent of Confidentiality: There is no need for confidentiality.

Needs and Uses: The Commission will submit this information collection to the Office of Management and Budget (OMB) after the 60 day comment period in order to obtain the full three year clearance from them. The Commission is requesting an extension (there are no changes to the reporting, recordkeeping and/or third party disclosure requirements). Part 101 requires various information to be filed and maintained by the respondent to determine the technical, legal and other qualifications of applications to operate a station in the public and private operational fixed services. The information is also used to determine whether the public interest convenience, and necessity are being served as required by 47 U.S.C. 309. The Commission staff also uses this information to ensure that applicants and licensees comply with ownership and transfer restrictions imposed by 47 U.S.C. 310. The information will continue to be used by the Commission staff in carrying out its duties under the Communications Act of 1934, as amended. Without this information, the Commission would not be able to carry out its statutory responsibilities.

Federal Communications Commission.

Marlene H. Dortch,

Secretary.

[FR Doc. E9–803 Filed 1–15–09; 8:45 am]

BILLING CODE 6712–01–P

FEDERAL COMMUNICATIONS COMMISSION

Notice of Public Information Collection(s) Being Reviewed by the Federal Communications Commission, Comments Requested

January 12, 2009.

SUMMARY: As part of its continuing effort to reduce paperwork burden and as required by the Paperwork Reduction Act (PRA) of 1995 (44 U.S.C. 3501–3520), the Federal Communications Commission invites the general public and other Federal agencies to comment on the following information collection(s). Comments are requested concerning (a) Whether the proposed collection of information is necessary for the proper performance of the functions of the Commission, including whether the information shall have practical utility; (b) the accuracy of the Commission's burden estimate; (c) ways to enhance the quality, utility, and clarity of the information collected; and (d) ways to minimize the burden of the collection of information on the respondents, including the use of automated collection techniques or other forms of information technology. An agency may not conduct or sponsor a collection of information unless it displays a currently valid OMB control number. No person shall be subject to any penalty for failing to comply with a collection of information subject to the Paperwork Reduction Act that does not display a valid OMB control number.

DATES: Written PRA comments should be submitted on or before March 17, 2009. If you anticipate that you will be submitting comments, but find it difficult to do so within the period of time allowed by this notice, you should advise the contact listed below as soon as possible.

ADDRESSES: Submit your comments by e-mail to *PRA@fcc.gov.* Include in the email the OMB control number of the collection or, if there is no OMB control number, the Title shown in the **SUPPLEMENTARY INFORMATION** section below. If you are unable to submit your comments by e-mail contact the person listed below to make alternate arrangements.

FOR FURTHER INFORMATION CONTACT: For additional information about the information collection(s) or to obtain a copy of the collection send an email to *PRA@fcc.gov* and include the collection's OMB control number as shown in the **SUPPLEMENTARY INFORMATION** section below (or the title of the collection if there is no OMB control number), or call Judith B. Herman at 202–418–0214.

SUPPLEMENTARY INFORMATION:

OMB Control Number: 3060–0986.

Title: Competitive Carrier Line Count Report, WC Docket No. 05–337, CC Docket No. 96–45.

Form Number(s): FCC Form 525.

Type of Review: Revision of a currently approved collection.

Respondents: Business or other for profit and not-for-profit institutions.

Number of Respondents and Responses: 2,159 respondents; 5,476 responses.

Estimated Time per Response: .5–80 hours.

Frequency of Response: On occasion, quarterly, and annual reporting requirements.

Obligation to Respond: Required to obtain or retain benefits.

Total Annual Burden: 47,393 hours.

Annual Cost Burden: $1,895,700.00.

Privacy Act Impact Assessment: No impact.

Nature and Extent of Confidentiality: The Commission is not requesting that the respondents submit confidential information to the FCC. Respondents may, however, request confidential treatment for information they believe to be confidential under 47 CFR Section 0.459 of the Commission's rules.

Needs and Uses: This collection will be submitted to OMB after the 60-day comment period as a revision to an existing collection. In April 2008, the Commission adopted an order that capped total annual competitive eligible telecommunications carrier (ETC) universal service high-cost support for each state at the level of support that competitive ETCs in that state were eligible to receive during March 2008 on an annualized basis. The Commission also adopted two limited exceptions from the application of the interim cap. First, a competitive ETC will not be subject to the interim cap to the extent it files cost data demonstrating that its costs meet the support threshold in the same manner as the incumbent local exchange carrier. Second, the Commission also created a limited exception for competitive ETCs serving tribal lands or Alaska Native regions. *High-Cost Universal Service Support; Federal-State Joint Board on Universal Service,* WC Docket No. 05–337, CC Docket No. 96–45, FCC 08–122. The Commission will not amend FCC Form 525 in order to incorporate the information requests related to the two limited exceptions to the interim cap on high-cost support. The Commission has reviewed the information collection and has revised the estimates that are detailed in the supporting statement.

Additionally, the Commission is revising the collection to incorporate the reporting requirements of OMB 3060–0793 for the self-certification as a rural carrier requirement into this collection under OMB Control Number 3060–0986. The self-certification for rural carriers is rarely filed with the Commission, therefore, its incorporation into OMB 3060–0986 will ease the Commission's administrative burden for complying with information collection requirements. Upon OMB approval of this revision, the Commission will voluntarily discontinue OMB Control Number 3060–0793 and retain this one for OMB's inventory.

Federal Communications Commission.

Marlene H. Dortch,

Secretary.

[FR Doc. E9–911 Filed 1–15–09; 8:45 am]

BILLING CODE 6712–01–P

FEDERAL COMMUNICATIONS COMMISSION

[DA 08–2817 and DA 09–15]

Consumer Advisory Committee

AGENCY: Federal Communications Commission

ACTION: Notice.

SUMMARY: The Commission announces the re-chartering and appointment of members to the Consumer Advisory Committee (''Committee'') of the Federal Communications Commission (''Commission''). The Commission further designates the Chairperson of the Committee, and announces the date and agenda of the Committee's first meeting in calendar year 2009.

DATES: The first meeting of the re-chartered Committee will take place on January 30, 2009, 9 a.m. to 4 p.m., at the Commission's Headquarters Building, Room TW–C305, 445 12th Street, SW., Washington, DC 20554.

ADDRESSES: Federal Communications Commission, 445 12th Street, NW., Washington, DC 20554.

FOR FURTHER INFORMATION CONTACT: Scott Marshall, Consumer & Governmental Affairs Bureau, (202) 418–2809 (voice), (202) 418–0179 (TTY), or e-mail *scott.marshal@fcc.gov.*

SUPPLEMENTARY INFORMATION: On December 30, 2008, the Commission released document DA 08–2817, which announced the re-chartering of its Consumer Advisory Committee, announced the appointment of twenty-eight (28) members to the Committee and designated the Committee's chairperson.

On January 9, 2009, the Commission released document DA 09–15, announced the agenda, date and time of the Committee's first meeting in calendar year 2009.

The Committee is organized under and will operate in accordance with the provisions of the Federal Advisory Committee Act, 5 U.S.C. App. 2 (1988). On November 17, 2008, the Committee was re-chartered for another two-year term.

The mission of the Committee is to make recommendations to the Commission regarding consumer issues within the jurisdiction of the Commission and to facilitate the participation of consumers (including people with disabilities and underserved populations, such as American Indians and persons living in rural areas) in proceedings before the Commission. Each meeting of the full Committee will be open to the public. A notice of each meeting will be published in the **Federal Register** at least fifteen (15) days in advance of the meeting. Records will be maintained of each meeting and made available for public inspection.

Functions

Digital Transition. The digital television transition will remain the principal focus of the Committee thru early 2009 as the Commission continues its efforts to assist consumers in understanding and preparing for the transition which, by law, must be completed by February 17, 2009.

Other Topics. In addition to digital television, other topics to be addressed by the Committee will include, but are not limited to, the following areas:

1. Consumer protection and education (*e.g.,* cramming, slamming, consumer friendly billing, detariffing, bundling of services, Lifeline/Linkup programs, customer service, privacy, telemarketing abuses, and outreach to underserved populations, such as Native Americans and persons living in rural areas).

2. Access by people with disabilities (*e.g.,* telecommunications relay services, video description, closed captioning, accessible billing and access to telecommunications products and services).

3. Impact upon consumers of new and emerging technologies (*e.g.,* availability of broadband, digital television, cable, satellite, low power FM, and the convergence of these and emerging technologies).

Appointment of Chairman and Members

The Commission appointed twenty-eight (28) members to its Consumer Advisory Committee. Of this number, twelve (12) represent interests of consumers, minorities, and low income communities; five (5) represent disabilities communities; six (6) represent the interest of state, local, and Native American interests, and, five (5) represent industry interests. The Committee's slate is designed to be representative of the Commission's many constituencies, and the diversity selected will provide a balanced point of view as required by the Federal Advisory Committee Act. All appointments are effective immediately and shall terminate November 17, 2010 or when the Committee is terminated, whichever is earlier.

The roster as appointed by Chairman Kevin J. Martin is as follows:

Ms. Debra Berlyn, representing the Digital Television Transition Coalition is hereby appointed as chairperson of the Committee.

Other members by organization and primary representative name include:

1. AARP—Marti T. Doneghy.
2. Alaska State Department of Law—Lew Craig.
3. Alliance for Community Media—Gloria Tristani.
4. American Council of the Blind—Eric Bridges.
5. Appalachian Regional Commission—Harry L. Roesch.
6. Benton Foundation—Charles Benton.
7. Cablevision—Dodie Tschirch.
8. Call For Action—Shirley Rooker.
9. Communication Service for the Deaf—Karen Peltz Strauss.
10. Communications Workers of America—Jeffrey Rechenbach.
11. Consumer Action—Ken McEldowney.
12. Consumer Electronics Association—Jamie Hedlund.
13. Consumer Federation of America—Irene E. Leech.
14. Consumers Union—Gene Kimmelman.
15. Deaf and Hard of Hearing Consumer Advocacy Network—Claude Stout.
16. Digital Television Transition Coalition—Debra Berlyn, Chairperson.
17. Dishnetwork Corporation (formerly EchoStar Communications Corporation)—Lori Kalani.
18. Hawaii State Public Utilities Commission—John Cole.
19. Eastern Band of Cherokee Indians—Brandon Stephens.
20. Hearing Loss Association of America—Lise Hamlin.
21. League of United Latin American Citizens—Eduardo Pena, Jr.
22. National Association of Broadcasters—John L. Sander.

23. National Association of Regulatory Utility Commissioners—Nixyvette Santini.

24. National Association of State Utility Consumer Advocates—Brenda Pennington.

25. Northern VA Resource Center for Deaf and Hard of Hearing Persons—Cheryl Heppner.

26. Parents Television Council—Dan Isett.

27. Southern Growth Policies Board—Scott Doron.

28. Verizon Communications, Inc.—Richard T. Ellis.

Meeting Date and Agenda

At its January 30, 2009 meeting, the Committee will continue its consideration of digital television (DTV) transition issues. The Committee may also consider recommendations regarding broadband/universal service, closed captioning, relay services, as well as other consumer issues within the jurisdiction of the Commission. In addition, the Committee will consider administrative and procedural matters relating to its functions.

Meetings are open to the public and are broadcast on the Internet in Real Audio/Real Video format with captioning at *http://www.fcc.gov/cgb/cac.* Members of the public may address the Committee or may send written comments to: Scott Marshall, Designated Federal Officer of the Committee, at the address indicated on the first page of this document. The meeting site is accessible to people with disabilities. Meetings are sign language interpreted with real-time transcription and assistive listening devices available. Meeting agendas and handout materials are provided in accessible formats.

To request materials in accessible formats for people with disabilities (Braille, large print, electronic files, audio format), send an e-mail to *fcc504@fcc.gov* or call the Consumer & Governmental Affairs Bureau at 202–418–0530 (voice), 202–418–0432 (TTY).

Federal Communications Commission

Catherine W. Seidel,

Chief, Consumer & Governmental Affairs Bureau.

[FR Doc. E9–940 Filed 1–15–09; 8:45 am]

BILLING CODE 6712–01–P

FEDERAL COMMUNICATIONS COMMISSION

[MB Docket No. 08–214; DA 08–2805; File No. CSR–7709–P et al.]

Herring Broadcasting, Inc. d/b/a WealthTV, Complainant v. Time Warner Cable Inc., Defendant; File No. CSR–7709–P; Herring Broadcasting, Inc. d/b/a WealthTV, Complainant v. Bright House Networks, LLC, Defendant; File No. CSR–7822–P; Herring Broadcasting, Inc. d/b/a WealthTV, Complainant v. Cox Communications, Inc., Defendant; File No. CSR–7829–P Herring Broadcasting, Inc. d/b/a WealthTV, Complainant v. Comcast Corporation, Defendant; File No. CSR–7907–P; TCR Sports Broadcasting Holding, L.L.P., d/b/a Mid-Atlantic Sports Network, Complainant v. Comcast Corporation, Defendant; File No. CSR–8001–P

AGENCY: Federal Communications Commission.

ACTION: Notice.

SUMMARY: This document finds that the Administrative Law Judge exceeded his authority by setting a hearing date beyond the 60-day deadline specified in the Hearing Designation Order for issuing a recommended decision regarding the above-captioned program carriage disputes and orders that the Media Bureau will proceed to resolve these disputes without the benefit of a recommended decision from the ALJ.

ADDRESSES: Federal Communications Commission, 445 12th Street, SW., Washington, DC 20554.

FOR FURTHER INFORMATION CONTACT: For additional information on this proceeding, contact Steven Broeckaert, *Steven.Broeckaert@fcc.gov,* or David Konczal, *David.Konczal@fcc.gov,* of the Media Bureau, Policy Division, (202) 418–2120.

SUPPLEMENTARY INFORMATION: This is a summary of the Memorandum Opinion and Order, DA 08–2805, adopted and released on December 24, 2008. The full text of this document is available for public inspection and copying during regular business hours in the FCC Reference Center, Federal Communications Commission, 445 12th Street, SW., CY–A257, Washington, DC 20554. This document will also be available via ECFS (*http://www.fcc.gov/cgb/ecfs/*). (Documents will be available electronically in ASCII, Word 97, and/or Adobe Acrobat.) The complete text may be purchased from the Commission's copy contractor, 445 12th Street, SW., Room CY–B402, Washington, DC 20554. To request this document in accessible formats (computer diskettes, large print, audio recording, and Braille), send an e-mail to *fcc504@fcc.gov* or call the Commission's Consumer and Governmental Affairs Bureau at (202) 418–0530 (voice), (202) 418–0432 (TTY).

Synopsis of the Order

I. Introduction

1. On October 10, 2008, the Media Bureau issued a *Memorandum Opinion and Hearing Designation Order* (''HDO'') in the above captioned matters. 73 FR 65312, November 3, 2008. The HDO, among other things, referred certain program carriage disputes to an Administrative Law Judge (''ALJ'') to resolve factual disputes as to whether the defendant cable operators had discriminated against the complainant video programmers in violation of the Commission's program carriage rules. 73 FR 65312, 65318, 65327, November 3, 2008. The HDO ordered the ALJ to make and return a recommended decision to the Commission within 60 days of the release date of the HDO, *i.e.*, by December 9, 2008. Unfortunately, the ALJ has not issued a recommended decision by the deadline but, instead, has set a date to begin a hearing more than three months past the HDO's deadline without indicating when a recommended decision will be released. *Herring Broadcasting, Inc.* v. *Time Warner Cable Inc. et al.*, Order, MB Docket No. 08–214, FCC 08M–50 (rel. Dec. 2, 2008). Maintaining that administrative delay will cause harm to the programmers, complainant Herring Broadcasting, Inc. d/b/a WealthTV (''WealthTV'') filed a motion to revoke the HDO and complainant TCR Sports Broadcasting Holding, L.L.P., d/b/a Mid-Atlantic Sports Network (''MASN'') filed a motion to reconsider the HDO, requesting that the Commission or the Media Bureau reclaim jurisdiction over the matters.

2. For the reasons stated below, we find the ALJ exceeded his authority by setting a hearing date beyond the HDO's 60-day deadline for issuing a recommended decision. The ALJ's limited authority to consider these matters extended through December 9, 2008. That deadline has passed, and the ALJ's delegated authority over these hearing matters has thus expired under the terms of the HDO. Accordingly, the Media Bureau will proceed to resolve the above-captioned program carriage disputes without the benefit of a recommended decision from the ALJ.

II. Background

3. *Program Carriage Provisions.* Section 616 of the Communications Act of 1934, as amended (the ''Communications Act''), directs the Commission to ''establish regulations governing program carriage agreements and related practices between cable operators or other multichannel video programming distributors and video programming vendors.'' 47 U.S.C. 536. Among other things, Congress directed that the regulations:

> (3) contain provisions designed to prevent a [MVPD] from engaging in conduct the effect of which is to unreasonably restrain the ability of an unaffiliated video programming vendor to compete fairly by discriminating in video programming distribution on the basis of affiliation or nonaffiliation of vendors in the selection, terms, or conditions for carriage of video programming provided by such vendors. 47 U.S.C. 536(a)(3); *see also* 47 CFR 76.1301(c).

4. The Commission adopted rules in 1993 to implement Section 616. *See* 47 CFR 76.1300–76.1302; *Second Report and Order,* 58 FR 60390, November 16, 1993. Specifically, Sections 76.1301(c) prohibits a cable operator or other MVPD from engaging in conduct that unreasonably restrains the ability of an unaffiliated programming vendor to compete fairly by discriminating against such vendor on the basis of its affiliation or nonaffiliation. 47 CFR 76.1301(c).

5. *Delegated Authority.* Under the Commission's delegation rules, the person ''to which functions are delegated shall, with respect to such functions, have all the jurisdiction, powers, and authority conferred by law upon the Commission,'' and ''any action taken pursuant to delegated authority shall have the same force and effect and shall be made, evidenced, and enforced in the same manner as actions of the Commission.'' 47 CFR 0.203. The Media Bureau is granted authority to administer and enforce rules and policies regarding program carriage. 47 CFR 0.61(f)(7). The procedural rules for program carriage provide that disputes are to be resolved on the basis of a complaint, answer and reply. *See* 47 CFR 76.1302(c), (d), (e). The general procedural rules set forth under Section 76.7 apply to program carriage proceedings unless specified otherwise under the program carriage rules. 47 CFR 76.1302(a). Section 76.7(g)(1) authorizes the Media Bureau to refer matters to an administrative law judge (''ALJ''):

> (1) After reviewing the pleadings, and at any stage of the proceeding thereafter, the Commission staff may, in its discretion, designate any proceeding or discrete issues arising out of any proceeding for an adjudicatory hearing before an administrative law judge. 47 CFR 76.7(g).

The Commission recognized that ''resolution of Section 616 complaints [would] necessarily focus on the specific facts pertaining to each negotiation, and the manner in which certain rights were obtained, in order to determine whether a violation has, in fact, occurred.'' *Second Report and Order,* 58 FR 60390, 60391, November 16, 1993. The Commission anticipated that the ''staff would be unable to resolve most carriage agreement complaints on the sole basis of a written record. * * *'' Second Report and Order, 58 FR 60390, 60392, November 16, 1993. In such cases, if the staff determines that the complainant has established a *prima facie* case but that the existing record is not sufficient to resolve the complaint and grant relief, the staff can either ''determine and outline the appropriate procedures for discovery, or will refer the case to an ALJ for an administrative hearing.'' *Second Report and Order,* 58 FR 60390, 60393–94, November 16, 1993. Thus, the decision to refer a case for resolution of factual disputes by an ALJ is discretionary.

6. *Program Carriage Complaints.* WealthTV, a video programming vendor, filed program carriage complaints against multichannel video programming distributors (''MVPDs'') Time Warner Cable Inc. (''TWC''), Bright House Networks, LLC (''BHN''), Cox Communications, Inc. (''Cox''), and Comcast Corporation (''Comcast''), alleging that they violated Section 76.1301(c) of the Commission's rules by discriminating against WealthTV's programming in favor of a similarly situated video programming vendor, MOJO, which is affiliated with TWC, BHN, Cox, and Comcast. MOJO is owned by iN DEMAND L.L.C., which is owned 54.1% by Comcast iN DEMAND Holdings, Inc.; 15.6% by Cox Communications Holdings, Inc.; and 30.3% by Time Warner Entertainment-Advance/Newhouse Partnership (''TWE–A/N'').

7. MASN, a regional sports network (''RSN'') which owns the rights to produce and exhibit the games of the Baltimore Orioles and Washington Nationals as well as other sporting events, filed a program carriage complaint against Comcast, the nation's largest MVPD, which holds an attributable ownership interest in two RSNs, Comcast SportsNet Philadelphia (''CSN–P'') and Comcast SportsNet Mid-Atlantic (''CSN–MA''), among other networks. MASN alleged that Comcast discriminated against MASN in favor of its affiliated video programming vendors in violation of Section 76.1301(c) of the Commission's rules. 47 CFR 76.1301(c).

8. *Hearing Designation Order.* On October 10, 2008, after reviewing the pleadings and supporting documentation filed by the parties in each case, the Media Bureau released a consolidated *Memorandum Opinion and Hearing Designation Order* (''HDO''). 73 FR 65312, November 3, 2008. The HDO determined that each of the complainants had established a *prima facie* showing of discrimination by the MVPDs in violation of Section 76.1301(c) of the program carriage rules. 73 FR 65312, 65314, 65316, 65317, 65318, 65327, November 3, 2008. The HDO set forth findings of fact in support of the determinations that a *prima facie* showing had been made (73 FR 65312, 65313–14, 65314–16, 65316–17, 65317–18, November 3, 2008), and resolved other procedural issues (73 FR 65312, 65324–25 (statute of limitations), 65325 (res judicata), November 3, 2008). The HDO further found that the pleadings and supporting documentation presented factual disputes as to whether the MVPDs discriminated against the video programmers in favor of their affiliated services. 73 FR 65312, 65318, 65327, November 3, 2008. Accordingly, the HDO designated the matters for hearing before an ALJ, ordering the ALJ to make and return a recommended decision and a recommended remedy, if necessary, to the Commission within 60 days of the release date of the HDO. 73 FR 65312, 65318, 65327, November 3, 2008. The HDO stated that upon receipt of the ALJ's recommended decision and remedy, the Commission would make the requisite legal determinations as to whether the MVPDs discriminated against the complainants' programming in favor of their own programming, with the effect of unreasonably restraining the complainants' ability to compete fairly in violation of Section 76.1302(c) and, if necessary would then decide upon appropriate remedies. 73 FR 65312, 65327, November 3, 2008. Under the terms of the grant of authority under the HDO, the ALJ's recommended decision was required to be made within 60 days of the October 10, 2008 release date of the HDO, *i.e.*, by December 9, 2008. 73 FR 65312, 65327, November 3, 2008.

9. *Proceedings Before the ALJ.* On October 23, 2008, Administrative Law Judge Steinberg issued an order stating that complainants will have the burden of proof with respect to specific issues identified in the Erratum to the HDO and setting a procedural schedule

providing for the exchange of direct case exhibits, stipulations, and a list of witnesses, if any, to be called for oral testimony; a date for the commencement of the hearing; and the filing of proposed findings of fact and conclusions of law, as well as any replies thereto. *Herring Broadcasting, Inc.* v. *Time Warner Cable Inc. et al.*, Order, MB Docket No. 08–214, FCC 08M–44 (rel. Oct. 23, 2008). The order established December 10 as the deadline for the filing of post-hearing briefs. *Id.* The order further determined that ''due to the time constraints imposed in the HDO discovery would not be practicable and WILL NOT BE PERMITTED.'' *Id.* at ¶ 3 (emphasis in original).

10. On November 20, 2008, Judge Steinberg issued a second order that reversed each of these determinations. *Herring Broadcasting, Inc.* v. *Time Warner Cable Inc. et al.*, Memorandum Opinion and Order, MB Docket No. 08–214, FCC 08M–47 (rel. Nov. 20, 2008). In response to motions for modification and clarification of the HDO filed by the cable operators, the ALJ indicated that, rather than limit the hearing to a resolution of factual disputes that the HDO designated for hearing, the ALJ would require re-litigation of all disputes in the case and review all evidence *de novo*. *Id.* at ¶ 6. In addition, the ALJ ruled that the 60-day timeframe set forth in the HDO ''cannot be achieved.'' *Id.* at ¶ 7 & n. 10. The ALJ further determined that some limited discovery should be undertaken. *Id.*

11. On November 24, 2008, Chief Administrative Law Judge Richard Sippel released an order announcing that Judge Steinberg would be retiring on January 3, 2009, and that Judge Sippel would be taking control of the case. *Herring Broadcasting, Inc.* v. *Time Warner Cable Inc. et al.*, Order, MB Docket No. 08–214, FCC 08M–48 (rel. Nov. 24, 2008). On November 25, the parties held a status conference with Judge Sippel, where the ALJ indicated that he would not adhere to the 60-day time frame specified in the HDO and that he would not give weight to the Bureau's findings of a *prima facie* case of discrimination in the HDO. *See Herring Broadcasting, Inc.* v. *Time Warner Cable Inc. et al.*, Transcript of Proceedings, MB Docket No. 08–214 (Nov. 25, 2008), at 97 (indicating the cases will be decided *de novo*); 104 (same); 141 (establishing March 17, 2009 as the date for commencement of the hearing). *See also* TCR's Motion for Reconsideration of Hearing Designation Order, filed Nov. 26, 2008, at 2. Judge Sippel thereafter set a date of March 17, 2009, to begin a hearing, but did not indicate how long the hearing would take or when his recommended decision would be released. *Herring Broadcasting, Inc.* v. *Time Warner Cable Inc. et al.*, Order, MB Docket No. 08–214, FCC 08M–50 (rel. Dec. 2, 2008); *Herring Broadcasting, Inc.* v. *Time Warner Cable Inc. et al.*, Revised Procedural and Hearing Order, MB Docket No. 08–214, FCC 08M–53 (rel. Dec. 15, 2008).

12. *Requested Relief.* On November 24, 2008, WealthTV filed a Motion for Revocation of Hearing Designation, requesting that the Media Bureau resolve the program carriage matters on the basis of the existing record since administrative delay in resolving the program carriage matter would result in irrevocable harm to the programmer. On November 26, 2008, MASN filed a Motion for Reconsideration of the Hearing Designation Order, requesting that the Commission or the Media Bureau reclaim jurisdiction over the matter. MASN contended that relief is necessary to resolve MASN's program carriage complaint expeditiously, as the Commission and Congress intended.

13. TWC, BHN, Comcast and Cox filed oppositions to WealthTV's Motion for Revocation, arguing that WealthTV has offered no basis for revoking the HDO and has chosen a procedurally improper means to remove the hearing from the ALJ. The cable operators request the Bureau to deny WealthTV's Motion for Revocation. Comcast filed a similar opposition to MASN's Motion for Reconsideration, arguing that reconsideration at this stage of the proceeding would be procedurally improper and outside the delegated authority of the Bureau. For these reasons, Comcast maintains the motion should be summarily dismissed or denied.

III. Discussion

14. For the reasons stated below, we find that the Administrative Law Judge's limited grant of authority under the HDO to issue a recommended decision by December 9, 2008, has expired under the terms of the HDO, and the ALJ thus no longer has delegated authority to conduct hearings in the above-captioned proceedings. Accordingly, the Media Bureau will proceed to resolve the above-captioned program carriage disputes and will conduct any further discovery as may be necessary for it to resolve any factual disputes.

15. The HDO resolved procedural issues and set forth factual findings based on a review of the pleadings and supporting documentation. 73 FR 65312, 65313–14, 65314–16, 65316–17, 65317–18, 65324–25, November 3, 2008. The HDO directed the ALJ to resolve factual disputes concerning whether the cable operators discriminated against the complainant programmers in favor of their affiliated programming service. 73 FR 65312, 65318, 65327, November 3, 2008. The HDO ordered the ALJ to issue a recommended decision within 60 days of the release date of the HDO. 73 FR 65312, 65318, 65327, November 3, 2008. The HDO was released on October 10, 2008, and under the terms of the HDO, the ALJ's recommended decision was to be issued by December 9, 2008. The expedited deadline for issuing the recommended decision was a critical component of the HDO. As complainants point out in their requests for relief, administrative delay in resolving program carriage disputes could result in irrevocable harm to an independent programmer (*e.g.*, a competing cable operator could use Commission procedures to delay a carriage remedy and thus potentially drive a competing unaffiliated programmer out of business) and potentially deprive viewers of access to desired programming. *See* Herring Broadcasting, Inc.'s Motion for Revocation of Hearing Designation, filed Nov. 24, 2008, at 2–3 (''The HDO's 60-day deadline reasonably and fairly took into account the harms that administrative delays can inflict, particularly on small businesses such as WealthTV. The deadline reflects congressional concern that holders of bottleneck power could utilize FCC procedures to delay a remedy, and thereby potentially drive competitors out of business''); TCR Sports Broadcasting Holding, L.L.P.'s Motion for Reconsideration of Hearing Designation Order, filed Nov. 26, 2008, at 6 (''under the [expedited deadline of] the HDO, a decision favorable to MASN would have been made well in advance of the next Major League Baseball (''MLB'') season (which begins April 6, 2009); under the ALJ's schedule, a decision by this Commission would not be possible until well into the next MLB season, thereby depriving hundreds of thousands of consumers of an opportunity to watch the Washington National and Baltimore Orioles baseball games in those markets where Comcast has discriminatorily refused to carry MASN''); *see also* Supplement to Herring Broadcasting, Inc.'s Motion for Revocation of Hearing Designation, filed Dec. 3, 2008.

16. Unfortunately, rather than set an expedited hearing schedule consistent with the HDO deadline, the ALJ greatly expanded the designated issues for hearing, then determined that the 60-day deadline for a recommended

decision could not be achieved. *Herring Broadcasting, Inc.* v. *Time Warner Cable Inc. et al.*, Memorandum Opinion and Order, MB Docket No. 08–214, FCC 08M–47 (rel. Nov. 20, 2008). The ALJ did not issue a recommended decision by December 9, 2008. Indeed, the hearing in these proceedings is not even scheduled to begin until March 17, 2009, more than three months past the HDO's December 9th deadline. *Herring Broadcasting, Inc.* v. *Time Warner Cable Inc. et al.*, Order, MB Docket No. 08–214, FCC 08M–50 (rel. Dec. 2, 2008). The ALJ had no authority to act inconsistently with the terms of the HDO from which he derived his authority. *Tequesta Television, Inc.*, 2 FCC Rcd 41, 42 ¶ 10 (1987) (''an ALJ may not countermand a designation order issued under delegated authority as to matters already considered by the delegating authority''). Commission case law makes clear that an Administrative Law Judge has no authority to act inconsistently with the terms of a Hearing Designation Order. *Anax Broadcasting, Inc.*, 87 FCC2d 483 ¶ 11 (1981) (ALJ has no authority to dismiss an application on grounds that were considered by an operating bureau in designating the application for hearing under delegated authority); *Frank H. Yemm*, 39 RR 2d 1657, 1659 (1977) (ALJ has no authority to dismiss as defective a show cause order issued by the Private Radio Bureau acting under delegated authority). *See also Algreg Cellular Engineering*, 9 FCC Rcd 5098 ¶ 75 (Rev. Bd. 1994) (ALJ has no authority to grant exceptors' request to confine the intervenors' participation to the Applicants where HDO accorded the intervenors full party status). Thus, by the express terms of the HDO, the ALJ's authority to issue a recommended decision in these proceedings expired after December 9, 2008. The Media Bureau will thus proceed to resolve the carriage disputes in the above-captioned matters.

17. We reject the cable operators' argument that a fair hearing could not be accomplished within the 60-day timeframe described in the HDO. The HDO defined the issues designated for hearing: Whether the cable operators discriminated against the complainant programmers in favor of their affiliated programming service. A 60-day deadline provided adequate time for the parties to present their case on this issue so that the ALJ could meet the December 9 deadline. Indeed, the ALJ's first scheduling order released October 23, 2008, established an expedited schedule more closely in line with the HDO deadline. *See Herring Broadcasting, Inc.* v. *Time Warner Cable Inc. et al.*, Order, MB Docket No. 08–214, FCC 08M–44 (rel. Oct. 23, 2008). It was not until the ALJ decided to disregard the facts and conclusions recited in the HDO, and instead give *de novo* consideration to all issues in the matter, that the ALJ determined that the 60-day deadline could not be achieved. *See Herring Broadcasting, Inc.* v. *Time Warner Cable Inc. et al.*, Memorandum Opinion and Order, MB Docket No. 08–214, FCC 08M–47 (rel. Nov. 20, 2008). We note that under the *Adelphia Merger Order*, the program carriage condition required certain program carriage disputes to be resolved through arbitration and required the arbitrator to render a decision within 45 days of a request for arbitration. *See Applications for Consent to the Assignment and/or Transfer of Control of Licenses, Adelphia Communications Corp., Assignors to Time Warner Cable, Inc. et al.*, Memorandum Opinion and Order, 21 FCC Rcd 8203, 8287–8288 Appendix B (2006). *See also TCR Sports Broadcasting, LLP* v. *Time Warner Cable*, Order on Review, DA 08–2441 (MB rel. Oct. 30, 2008). Moreover, a 60-day deadline is consistent with Commission precedent for deciding program carriage disputes. In another program carriage complaint proceeding involving MASN and Comcast, the Commission directed the ALJ to hold a hearing to resolve factual disputes with respect to the programmer's claims and return a recommended decision and remedy to the Commission within 45 days. *See In the Matter of TCR Sports Broadcasting Holding, L.L.P.* v. *Comcast Corp.*, Memorandum Opinion and Hearing Designation Order, 71 FR 47222, 47222–23, August 16, 2006. For these reasons, we believe that the 60-day deadline imposed by the Bureau under the HDO was reasonable under Commission precedent and provided sufficient time to address these matters. In any event, as reviewed above, the ALJ had no authority to expand the designated issues for hearing in this manner or extend the deadline for issuing a recommended decision.

18. We also reject the cable operators' argument that resolving disputed issues of fact is a function reserved to the ALJ, and may not be conducted by Media Bureau staff. To the contrary, the Bureau is delegated broad authority over program carriage disputes to administer and enforce rules and policies regarding program carriage. 47 CFR 0.61(f)(7). The Bureau acts under delegated authority invested with the full powers of the Commission. 47 CFR 0.203(a). Nothing in the Commission's rules requires the Bureau to designate a program carriage dispute for hearing before an ALJ. We reject Comcast's argument that the Bureau may not reclaim jurisdiction over the proceedings because in the HDO the Bureau found there were factual disputes that it was unable to determine on the basis of the existing records. The Bureau is not confined to the existing record and has procedural tools at its disposal to have the parties supplement the existing record in order to resolve the factual disputes. *See, e.g.*, 47 CFR 76.7(e)(1) (''The Commission may specify other procedures, such as oral argument or evidentiary hearing directed to particular aspects, as it deems appropriate''); 76.7(e)(2) (''The Commission may require the parties to submit any additional information it deems appropriate for a full, fair, and expeditious resolution of the proceeding, including copies of all contracts and documents reflecting arrangements and understandings alleged to violate the requirements set forth in the Communications Act and in this part, as well as affidavits and exhibits); 76.7(f)(1) (''The Commission staff may in its discretion order discovery limited to the issues specified by the Commission. Such discovery may include answers to written interrogatories, depositions or document production.''). As the ALJ's authority to resolve the factual disputes and return a recommended decision has expired, the Media Bureau will proceed to resolve the factual disputes using the tools at its disposal and render a decision. Commission rules authorize the Media Bureau to refer such matters to an ALJ ''in its discretion.'' 47 CFR 76.7(g); *see also Second Report and Order*, 58 FR 60390, 60393–94, November 16, 1993 (contemplating resolution of factual disputes either by the staff or by referral to an ALJ, at the Bureau's discretion). Moreover, the HDO directed the ALJ to issue a *recommended* decision, but made clear that the Commission would render the ultimate decision, *i.e.*, make the requisite legal determination as to whether the defendants had discriminated against the complainants' programming in favor of its own programming in violation of the program carriage rules. 73 FR 65312, 65327, November 3, 2008. Under Commission rules, the Media Bureau has broad authority to perform these functions. 47 CFR 0.61. Likewise, we reject Comcast's argument that the Bureau cannot proceed here because it is ''statutorily forbidden'' under Section 5(c)(1) and (8) of the Communications Act from reviewing the rulings of the

ALJ. Section 5(c)(1) and (8) of the Act describe the employees to whom the Commission may delegate review functions in cases of adjudications. 47 U.S.C. 155(c)(1), (8). These statutory provisions are inapplicable here because the Bureau is not reviewing any decision of the ALJ. Indeed, the ALJ has not issued any decision as required by the HDO so there is no ALJ *recommended* decision to review. The ALJ's authority under the HDO was limited to issuing a *recommended* decision within 60 days of the release date of the HDO. The HDO made clear that the Commission was to render the ultimate decision and nothing in the HDO divested the Commission (or the Media Bureau on delegated authority) from resolving the factual disputes and issuing a decision in the event that the ALJ failed to exercise its delegated authority under the HDO.

19. The cable operators also argue that the period for seeking reconsideration under Section 405 of the Act (47 U.S.C. 405) has passed, and that a request for revocation of the hearing designation would be an improper appeal of an interlocutory ruling. We need not address these arguments because we are neither reconsidering nor revoking the HDO. As indicated above, the grant of authority in the instant matters was limited to the ALJ issuing a recommended decision by December 10, 2008. That date having passed, the ALJ has no further authority over these matters and revocation and reconsideration are unnecessary. Thus, the petitions to revoke or reconsider the HDO are moot.

IV. Ordering Clauses

20. Accordingly, *It is ordered*, that the Hearing Designation Order for the above captioned matters has *Expired*, the proceedings set for hearing before the Administrative Law Judge are *Terminated*, and the Media Bureau will proceed to resolve the above captioned program carriage disputes.

21. *It is further ordered* that all parties to the above-captioned proceedings will be served with a copy of this Memorandum Opinion and Order by e-mail and by certified mail, return receipt requested.

22. *It is further ordered* that a copy of this Memorandum Opinion and Order or a summary thereof *shall be published* in the **Federal Register**.

Federal Communications Commission

Monica Shah Desai,

Chief, Media Bureau.

[FR Doc. E9–1064 Filed 1–15–09; 8:45 am]

BILLING CODE 6712–01–P

DEPARTMENT OF THE TREASURY

Office of the Comptroller of the Currency

FEDERAL RESERVE SYSTEM

FEDERAL DEPOSIT INSURANCE CORPORATION

Agency Information Collection Activities: Submission for OMB Review; Joint Comment Request

AGENCIES: Office of the Comptroller of the Currency (OCC), Treasury; Board of Governors of the Federal Reserve System (Board); and Federal Deposit Insurance Corporation (FDIC).

ACTION: Notice of information collection to be submitted to OMB for review and approval under the Paperwork Reduction Act of 1995.

SUMMARY: In accordance with the requirements of the Paperwork Reduction Act of 1995 (44 U.S.C. chapter 35), the OCC, the Board, and the FDIC (the ''agencies'') may not conduct or sponsor, and the respondent is not required to respond to, an information collection unless it displays a currently valid Office of Management and Budget (OMB) control number.

On September 2, 2008, the agencies, under the auspices of the Federal Financial Institutions Examination Council (FFIEC), published a notice in the **Federal Register** (73 FR 51300) requesting public comment on the extension, without revision, of the currently approved information collections, the Country Exposure Report (FFIEC 009) and the Country Exposure Information Report (FFIEC 009a). The comment period for this notice expired on November 3, 2008. No comments were received. The agencies are now submitting requests to OMB for approval of the extension, without revision, of the FFIEC 009 and FFIEC 009a reports.

DATES: Comments must be submitted on or before February 17, 2009.

ADDRESSES: Interested parties are invited to submit written comments to any or all of the agencies. All comments, which should refer to the OMB control number, will be shared among the agencies.

OCC: You should direct all written comments to: Communications Division, Office of the Comptroller of the Currency, Public Information Room, Mailstop 1–5, *Attention:* 1557–0100, 250 E Street, SW., Washington, DC 20219. In addition, comments may be sent by fax to 202–874–4448, or by electronic mail to *regs.comments@occ.treas.gov*. For security reasons, the OCC requires that visitors make an appointment to inspect comments. You may do so by calling 202–874–5043. Upon arrival, visitors will be required to present valid government-issued photo identification and submit to security screening in order to inspect and photocopy comments.

Board: You may submit comments, identified by FFIEC 009 or FFIEC 009a, by any of the following methods:

- *Agency Web Site: http://www.federalreserve.gov*. Follow the instructions for submitting comments on the *http://www.federalreserve.gov/generalinfo/foia/ProposedRegs.cfm*.
- *Federal eRulemaking Portal: http://www.regulations.gov*. Follow the instructions for submitting comments.
- *E-mail: regs.comments@federalreserve.gov*. Include the OMB control number in the subject line of the message.
- *Fax*: 202–452–3819 or 202–452–3102.
- *Mail*: Jennifer J. Johnson, Secretary, Board of Governors of the Federal Reserve System, 20th Street and Constitution Avenue NW., Washington, DC 20551.

All public comments are available from the Board's Web site at *http://www.federalreserve.gov/generalinfo/foia/ProposedRegs.cfm* as submitted, except as necessary for technical reasons. Accordingly, your comments will not be edited to remove any identifying or contact information. Public comments may also be viewed electronically or in paper in Room MP–500 of the Board's Martin Building (20th and C Streets, NW) between 9 a.m. and 5 p.m. on weekdays.

FDIC: You may submit written comments, which should refer to ''Country Exposure Reports, 3064–0017,'' by any of the following methods:

- *Agency Web Site: http://www.fdic.gov/regulations/laws/federal/propose.html*. Follow the instructions for submitting comments on the FDIC Web site.
- *Federal eRulemaking Portal: http://www.regulations.gov*. Follow the instructions for submitting comments.
- *E-mail: Comments@FDIC.gov*. Include ''Country Exposure Reports, 3064–0017'' in the subject line of the message.
- *Mail*: Robert E. Feldman, Executive Secretary, Attention: Comments, FDIC, 550 17th Street, NW., Washington, DC 20429.
- *Hand Delivery/Courier*: Guard station at the rear of the 550 17th Street Building (located on F Street) on business days between 7 a.m. and 5 p.m.

Public Inspection: All comments received will be posted without change to *http://www.fdic.gov/regulations/laws/federal/propose/html* including any personal information provided. Comments may be inspected at the FDIC Public Information Center, Room E–1002, 3501 Fairfax Drive, Arlington, VA 22226, between 9 a.m. and 5 p.m. on business days.

Additionally, commenters may send a copy of their comments to the OMB desk officer for the agencies by mail to the Office of Information and Regulatory Affairs, U.S. Office of Management and Budget, New Executive Office Building, Room 10235, 725 17th Street, NW., Washington, DC 20503, or by fax to 202–395–6974.

FOR FURTHER INFORMATION CONTACT: Additional information or a copy of the collection may be requested from:

OCC: Mary Gottlieb, OCC Clearance Officer, 202–874–5090, Legislative and Regulatory Activities Division, Office of the Comptroller of the Currency, 250 E Street, SW., Washington, DC 20219.

Board: Michelle Shore, Federal Reserve Board Clearance Officer, 202–452–3829, Division of Research and Statistics, Board of Governors of the Federal Reserve System, 20th and C Streets, NW., Washington, DC 20551. Telecommunications Device for the Deaf (TDD) users may call 202–263–4869.

FDIC: Herbert J. Messite, Counsel, 202–898–6834, Legal Division, Federal Deposit Insurance Corporation, 550 17th Street, NW., Washington, DC 20429.

SUPPLEMENTARY INFORMATION: Proposal to request approval from OMB of the extension for three years, without revision, of the following reports:

Report Title: Country Exposure Report and Country Exposure Information Report.

Form Number: FFIEC 009 and FFIEC 009a.

Frequency of Response: Quarterly.

Affected Public: Business or other for profit.

OCC:

OMB Number: 1557–0100.

Estimated Number of Respondents: 19 (FFIEC 009), 19 (FFIEC 009a).

Estimated Average Time per Response: 70 burden hours (FFIEC 009), 5.25 burden hours (FFIEC 009a).

Estimated Total Annual Burden: 5,320 burden hours (FFIEC 009), 399 burden hours (FFIEC 009a).

Board:

OMB Number: 7100–0035.

Estimated Number of Respondents: 28 (FFIEC 009), 15 (FFIEC 009a).

Estimated Average Time per Response: 70 burden hours (FFIEC 009), 5.25 burden hours (FFIEC 009a).

Estimated Total Annual Burden: 7,840 burden hours (FFIEC 009), 315 burden hours (FFIEC 009a).

FDIC:

OMB Number: 3064–0017.

Estimated Number of Respondents: 18 (FFIEC 009), 18 (FFIEC 009a).

Estimated Average Time per Response: 70 burden hours (FFIEC 009), 5.25 burden hours (FFIEC 009a).

Estimated Total Annual Burden: 5,040 burden hours (FFIEC 009), 378 burden hours (FFIEC 009a).

General Description of Reports

These information collections are mandatory: 12 U.S.C. 161 and 1817 (national banks), 12 U.S.C. 248(a), 1844(c), and 3906 (state member banks and bank holding companies); and 12 U.S.C. 1817 and 1820 (insured state nonmember commercial and savings banks). The FFIEC 009 information collection is given confidential treatment (5 U.S.C. 552(b)(4) and (b)(8)). The FFIEC 009a information collection is not given confidential treatment.

Abstract

The Country Exposure Report (FFIEC 009) is filed quarterly with the agencies and provides information on international claims of U.S. banks and bank holding companies that is used for supervisory and analytical purposes. The information is used to monitor country exposure of banks to determine the degree of risk in their portfolios and the possible impact on U.S. banks of adverse developments in particular countries. The Country Exposure Information Report (FFIEC 009a) is a supplement to the FFIEC 009 and provides publicly available information on material foreign country exposures (all exposures to a country in excess of 1 percent of total assets or 20 percent of capital, whichever is less) of U.S. banks and bank holding companies that file the FFIEC 009 report. As part of the Country Exposure Information Report, reporting institutions must also furnish a list of countries in which they have lending exposures above 0.75 percent of total assets or 15 percent of total capital, whichever is less.

Request for Comment

Comments are invited on:

a. Whether the information collections are necessary for the proper performance of the agencies' functions, including whether the information has practical utility;

b. The accuracy of the agencies' estimates of the burden of the information collections, including the validity of the methodology and assumptions used;

c. Ways to enhance the quality, utility, and clarity of the information to be collected;

d. Ways to minimize the burden of information collections on respondents, including through the use of automated collection techniques or other forms of information technology; and

e. Estimates of capital or start up costs and costs of operation, maintenance, and purchase of services to provide information.

Comments submitted in response to this notice will be shared among the agencies. All comments will become a matter of public record. Written comments should address the accuracy of the burden estimates and ways to minimize burden including the use of automated collection techniques or the use of other forms of information technology as well as other relevant aspects of the information collection request.

Subject: FFIEC 009 and FFIEC 009a.

Dated: December 22. 2008.

Michele Meyer,

Assistant Director, Legislative and Regulatory Activities Division, Office of the Comptroller of the Currency.

Board of Governors of the Federal Reserve System, January 12, 2009.

Jennifer J. Johnson,

Secretary of the Board.

Dated at Washington, DC, this 19th day of December 2008.

Federal Deposit Insurance Corporation.

Robert E. Feldman,

Executive Secretary.

[FR Doc. E9–841 Filed 1–15–09; 8:45 am]

BILLING CODE 4810–33–P; 6210–01–P; 6714–01–P

FEDERAL ELECTION COMMISSION

Sunshine Act Notices

AGENCY: Federal Election Commission.

The Executive Session scheduled for Tuesday, January 13, 2009, was cancelled.

* * * * *

DATE AND TIME: Wednesday, January 14, 2009, 10 a.m.

This hearing will be continued on Thursday, January 15, 2009, at 10 a.m.

PLACE: 999 E Street, NW., Washington, DC (Ninth Floor).

STATUS: Public hearing on Commission policies, practices, and procedures.

* * * * *

DATE AND TIME: Thursday, January 15, 2009, Open Meeting (rescheduled to begin at 2 p.m.).

PLACE: 999 E Street, NW., Washington, DC (Ninth Floor).

Individuals who plan to attend and require special assistance, such as sign

language interpretation or other reasonable accommodations, should contact Mary Dove, Commission Secretary, at (202) 694–1040, at least 72 hours prior to the hearing date.

PERSON TO CONTACT FOR INFORMATION: Judith Ingram, Press Officer, Telephone: (202) 694–1220.

Mary Dove,

Secretary of the Commission.

[FR Doc. E9–855 Filed 1–15–09; 8:45 am]

BILLING CODE 6715–01–P

FEDERAL RETIREMENT THRIFT INVESTMENT BOARD

Privacy Act of 1974; System of Records

AGENCY: Federal Retirement Thrift Investment Board.

ACTION: Notice to alter a system of records.

SUMMARY: The Federal Retirement Thrift Investment Board (Agency) proposes to alter a system of records notice in its existing inventory of records subject to the Privacy Act of 1974, (5 U.S.C. 552a), as amended.

The proposed changes to FRTIB–1, Thrift Savings Plan Records, are necessary as the system location, system manager, and record access procedures have changed. These changes are also necessary in order to make clear the distinction between information available to beneficiaries and information available to someone handling a participant's estate. Finally, these changes are necessary to allow the Agency to share participant information with agency personnel and casualty assistance officers who are aiding beneficiaries, with consumer reporting agencies when necessary for the Agency to collect a debt owed to it under 5 U.S.C. 3711, and with quality control companies that are verifying documents submitted to lenders in connection with participants' commercial loan applications.

DATES: *Effective Date:* This proposed action will be effective without further notice on February 17, 2009 unless comments are received which result in a contrary determination.

ADDRESSES: Comments may be sent to Megan Graziano, Assistant General Counsel, Federal Retirement Thrift Investment Board, 1250 H Street, NW., Washington, DC 20005. The Agency's fax number is (202) 942–1676.

FOR FURTHER INFORMATION CONTACT: Megan Graziano on (202) 942–1660.

SUPPLEMENTARY INFORMATION: The Agency administers the TSP, which was established by the Federal Employees' Retirement System Act of 1986 (FERSA), Public Law 99–335, 100 Stat. 514. The TSP provisions of FERSA are codified, as amended, largely at 5 U.S.C. 8351 and 8401–79. The TSP is a tax-deferred retirement savings plan for Federal civilian employees and members of the uniformed services. The TSP is similar to cash or deferred arrangements established for private-sector employees under section 401(k) of the Internal Revenue Code (26 U.S.C. 401(k)).

The proposed system reports, as required by 5 U.S.C. 552a(r), of the Privacy Act of 1974, as amended, were submitted to the House Committee on Government Reform, the Senate Committee on Homeland Security and Government Affairs, and the Office of Management and Budget (OMB) pursuant to paragraph 4c of Appendix I to OMB Circular No. A–130, ''Federal Agency Responsibilities for Maintaining Records About Individuals,'' dated February 8, 1996 (February 20, 1996, 61 FR 6427).

Thomas K. Emswiler,

General Counsel, Federal Retirement Thrift Investment Board.

FRTIB–1

SYSTEM NAME:

* * * * *

SYSTEM LOCATION:

Delete the entry and replace with these two sentences: ''These records are located at the office of the entity engaged by the Agency to perform record keeping services for the TSP. The current address for this record keeper is listed at *http://www.tsp.gov.*''

CATEGORIES OF INDIVIDUALS COVERED BY THE SYSTEM:

* * * * *

CATEGORIES OF RECORDS IN THE SYSTEM:

* * * * *

AUTHORITY FOR MAINTENANCE OF THE SYSTEM:

* * * * *

PURPOSES:

* * * * *

ROUTINE USES OF RECORDS MAINTAINED IN THE SYSTEM, INCLUDING CATEGORIES OF USERS AND THE PURPOSES OF SUCH USES:

Edit subpart (e) as follows:

''(e). When a participant to whom a record pertains dies, to disclose the following types of information to any potential beneficiary: Information in the participant's record which could have been properly disclosed to the participant when living (unless doing so would constitute a clearly unwarranted invasion of privacy) and the name and relationship of any other person who claims the benefits or who is entitled to share the benefits payable.'' Add the following subpart after (e) and redesignate all subparts thereafter:

''(f). When a participant to whom a record pertains dies, to disclose the following types of information to anyone handling the participant's estate: Information in the participant's record which could have been properly disclosed to the participant when living (unless doing so would constitute a clearly unwarranted invasion of privacy), the name and the relationship of any person who claims the benefits or who is entitled to share the benefits payable, and information necessary for the estate's administration (for example, post-death tax reporting).''

Add the following subparts after subpart (r):

''(s). To disclose to personnel from agency personnel/payroll offices or to casualty assistance officers when necessary to assist a beneficiary or potential beneficiary.

(t). To disclose to a consumer reporting agency when the Board is trying to collect a debt owed to the Board under the provisions of 5 U.S.C. 3711.

(u). To disclose to quality control companies when such companies are verifying documents submitted to lenders in connection with participants' commercial loan applications.''

POLICIES AND PRACTICES FOR STORING, RETRIEVING, ACCESSING, RETAINING AND DISPOSING OF RECORDS IN THE SYSTEM:

* * * * *

STORAGE:

* * * * *

RETRIEVABILITY:

* * * * *

SAFEGUARDS:

* * * * *

RETENTION AND DISPOSAL:

* * * * *

SYSTEM MANAGER(S) AND ADDRESS:

Delete, the words ''Executive Director'' and replace with the words ''Chief Financial Officer.''

RECORD ACCESS PROCEDURES:

Delete the third sentence in the final paragraph and replace entry with these two sentences: ''To use the TSP ThriftLine, the participant must have a touch-tone telephone and call the following number 1–877–968–3778. Hearing-impaired participants should dial 1–877–847–4385.''

Delete the fifth and final sentence in the final paragraph.

CONTESTING RECORD PROCEDURES:

* * * * *

RECORD SOURCE CATEGORIES:

* * * * *

[FR Doc. E9–887 Filed 1–15–09; 8:45 am]

BILLING CODE 6760–01–P

FEDERAL TRADE COMMISSION

[File No. 082 3032]

Shiva Venture Group, Inc. dba INNOVA Financial Group; Analysis of Proposed Consent Order to Aid Public Comment

AGENCY: Federal Trade Commission.

ACTION: Proposed Consent Agreement.

SUMMARY: The consent agreement in this matter settles alleged violations of federal law prohibiting unfair or deceptive acts or practices or unfair methods of competition. The attached Analysis to Aid Public Comment describes both the allegations in the draft complaint and the terms of the consent order—embodied in the consent agreement—that would settle these allegations.

DATES: Comments must be received on or before February 9, 2009.

ADDRESSES: Interested parties are invited to submit written comments. Comments should refer to ''Innova Financial Group, File No. 082 3032,'' to facilitate the organization of comments. A comment filed in paper form should include this reference both in the text and on the envelope, and should be mailed or delivered to the following address: Federal Trade Commission/ Office of the Secretary, Room 135-H, 600 Pennsylvania Avenue, N.W., Washington, D.C. 20580. Comments containing confidential material must be filed in paper form, must be clearly labeled ''Confidential,'' and must comply with Commission Rule 4.9(c). 16 CFR 4.9(c) (2005).[1] The FTC is requesting that any comment filed in paper form be sent by courier or overnight service, if possible, because U.S. postal mail in the Washington area and at the Commission is subject to delay due to heightened security precautions. Comments that do not contain any nonpublic information may instead be filed in electronic form by following the instructions on the web-based form at (*http://secure.commentworks.com/ftc-InnovaFinancialGroup*). To ensure that the Commission consider an electronic comment, you must file it on that web-based form.

The FTC Act and other laws the Commission administers permit the collection of public comments to consider and use in this proceeding as appropriate. All timely and responsive public comments, whether filed in paper or electronic form, will be considered by the Commission, and will be available to the public on the FTC website, to the extent practicable, at *www.ftc.gov.* As a matter of discretion, the FTC makes every effort to remove home contact information for individuals from the public comments it receives before placing those comments on the FTC website. More information, including routine uses permitted by the Privacy Act, may be found in the FTC's privacy policy, at (*http://www.ftc.gov/ftc/privacy.shtm*).

FOR FURTHER INFORMATION CONTACT: Carole Reynolds, Bureau of Consumer Protection, 600 Pennsylvania Avenue, NW, Washington, D.C. 20580, (202) 326-3230.

SUPPLEMENTARY INFORMATION: Pursuant to section 6(f) of the Federal Trade Commission Act, 38 Stat. 721, 15 U.S.C. 46(f), and § 2.34 of the Commission Rules of Practice, 16 CFR 2.34, notice is hereby given that the above-captioned consent agreement containing a consent order to cease and desist, having been filed with and accepted, subject to final approval, by the Commission, has been placed on the public record for a period of thirty (30) days. The following Analysis to Aid Public Comment describes the terms of the consent agreement, and the allegations in the complaint. An electronic copy of the full text of the consent agreement package can be obtained from the FTC Home Page (for January 8, 2009), on the World Wide Web, at (*http://www.ftc.gov/os/2009/01/index.htm*). A paper copy can be obtained from the FTC Public Reference Room, Room 130-H, 600 Pennsylvania Avenue, NW, Washington, D.C. 20580, either in person or by calling (202) 326-2222.

Public comments are invited, and may be filed with the Commission in either paper or electronic form. All comments should be filed as prescribed in the **ADDRESSES** section above, and must be received on or before the date specified in the **DATES** section.

Analysis of Agreement Containing Consent Order to Aid Public Comment

The Federal Trade Commission (''FTC'') has accepted, subject to final approval, an agreement containing a consent order from Shiva Venture Group, Inc. dba Innova Financial Group (''respondent'').

The proposed consent order has been placed on the public record for thirty (30) days for the receipt of comments by interested persons. Comments received during this period will become part of the public record. After thirty (30) days, the Commission will again review the agreement and the comments received, and will decide whether it should withdraw from the agreement or make final the agreement's proposed order.

The complaint alleges that respondent engaged in practices that violate Section 5(a) of the Federal Trade Commission Act, 15 U.S.C. § 45(a), Section 144 of the Truth in Lending Act (''TILA''), 15 U.S.C. § 1664, and Section 226.24 of Regulation Z, 12 C.F.R. § 226.24.

Section 5(a) of the FTC Act prohibits unfair or deceptive acts or practices. Respondent violated Section 5(a) of the FTC Act, because it disseminated or has caused to be disseminated home loan advertisements which offer a low monthly payment amount and/or payment rate, but fail to disclose, or fail to disclose adequately, that this monthly payment amount and/or payment rate: (1) Apply only for a limited period of time, after which they will increase; (2) do not include the amount of interest that the consumer owes each month; and (3) are less than the monthly payment amount (including interest) and/or the interest rate that the consumer owes, with the difference added to the total amount due from the consumer or total loan balance. This information would be material to consumers shopping for a mortgage loan and the failure to disclose, or failure to disclose adequately, this information is a deceptive practice.

TILA and Regulation Z require that closed-end credit advertisers who state a periodic payment amount must also provide additional information in the advertisement, including the terms of repayment; the annual percentage rate (''APR''); and if the APR may be increased after consummation, that fact. TILA and Regulation Z also require that if an advertisement states a rate of finance charge, it must state the rate as an APR. Currently, Regulation Z also requires that if the advertisement states a payment rate, it must include additional disclosures. Respondent's advertisements failed to disclose, or failed to disclose clearly and

[1] The comment must be accompanied by an explicit request for confidential treatment, including the factual and legal basis for the request, and must identify the specific portions of the comment to be withheld from the public record. The request will be granted or denied by the Commission's General Counsel, consistent with applicable law and the public interest. *See* Commission Rule 4.9(c), 16 CFR 4.9(c).

conspicuously, this information required by TILA and Regulation Z. Respondent's failure to disclose this information undermined consumers' ability to compare these offers to others in the marketplace. Through its law enforcement actions, the Commission intends to promote compliance with the disclosure requirements of TILA and Regulation Z, and to foster comparison shopping for mortgage loans.

The proposed consent order contains provisions designed to prevent respondent from violating the FTC Act or failing to make clear and conspicuous disclosures required by TILA and Regulation Z in the future. The proposed consent order requires respondent to comply with the TILA and Regulation Z, as has been amended, *see* 73 Fed. Reg. 44,522 (July 30, 2008), and as may be further amended in the future.

Part I of the proposed order prohibits respondent, in connection with closed-end credit, from advertising a monthly payment amount unless respondent discloses, clearly and conspicuously and in close proximity to those representations, as applicable, that the advertised monthly payment amount: (1) applies only for a limited period of time, after which it will increase; (2) does not include the amount of interest that the consumer owes each month; and (3) is less than the monthly payment amount (including interest) that the consumer owes, with the difference added to the total amount due from the consumer or total loan balance.

Part II of the proposed order prohibits respondent, in connection with closed-end credit, from advertising a rate lower than the rate at which interest is accruing, regardless of whether the rate is referred to as an ''effective rate,'' a ''payment rate,'' a ''qualifying rate,'' or any other term, provided that this provision does not prohibit advertisement of the ''annual percentage rate'' or ''APR.'' In light of respondent's deceptive use of payment rates in its advertisements, and the Federal Reserve Board's amendments to Regulation Z banning the use of such rates effective October 1, 2009, the proposed order prohibits respondent from advertising any such rate, to ensure that respondent's advertisements do not deceive consumers. S*ee* 73 Fed. Reg. at 44,608.

Part III of the proposed order prohibits respondent, in connection with closed-end credit, from advertising the amount of any payment, the number of payments or the period of repayment, or the amount of any finance charge, without disclosing, clearly and conspicuously, all of the terms required by TILA and Regulation Z, including the terms of repayment; the APR; and if the APR may be increased after consummation, that fact.

Part IV of the proposed order prohibits respondent, in connection with closed-end credit, from stating a rate of finance charge without stating the rate as an APR, as required by TILA and Regulation Z.

Part V of the proposed order prohibits respondent from failing to comply in any respect with TILA or Regulation Z.

Part VI of the proposed order contains a document retention requirement, the purpose of which is to ensure compliance with the proposed order. It requires that respondent maintain all records that will demonstrate compliance with the proposed order.

Part VII of the proposed order requires respondent to distribute copies of the order to various principals, officers, directors, and managers, and all current and future employees, agents and representatives having responsibilities with respect to the subject matter of the order.

Part VIII of the proposed order requires respondent to notify the Commission of any changes in its corporate structure that might affect compliance with this order. Part IX of the proposed order requires respondent to file with the Commission one or more reports detailing compliance with the order.

Part X of the proposed order is a ''sunset'' provision, dictating the conditions under which the order will terminate twenty years from the date it is issued or twenty years after a complaint is filed in federal court, by either the United States or the FTC, alleging any violations of the order.

The purpose of this analysis is to facilitate public comment on the proposed order, and it is not intended to constitute an official interpretation of the agreement and proposed order or to modify in any way their terms.

By direction of the Commission.

Donald S. Clark,

Secretary.

[FR Doc. E9–812 Filed 1–15–09: 8:45 am]

BILLING CODE 6750–01–S

GENERAL SERVICES ADMINISTRATION

[OMB Control No. 3090–0235]

General Services Administration Acquisition Regulation; Information Collection; Price Reductions Clause

AGENCY: Office of the Chief Acquisition Officer, GSA.

ACTION: Notice of request for comments regarding a renewal to an existing OMB clearance.

SUMMARY: Under the provisions of the Paperwork Reduction Act of 1995 (44 U.S.C. Chapter 35), the General Services Administration has submitted to the Office of Management and Budget (OMB) a request to review and approve an extension of a currently approved information collection requirement regarding the GSAR Price Reductions Clause. A request for public comments was published at 73 FR 45772, August 6, 2008. No comments were received. The clearance currently expires on January 31, 2009.

Public comments are particularly invited on: Whether this collection of information is necessary and whether it will have practical utility; whether our estimate of the public burden of this collection of information is accurate, and based on valid assumptions and methodology; ways to enhance the quality, utility, and clarity of the information to be collected.

DATES: Submit comments on or before: February 17, 2009.

FOR FURTHER INFORMATION CONTACT: Mr. Warren Blankenship, Procurement Analyst, Contract Policy Division, at telephone (202) 501–1900 or via e-mail to warren.blankenship@gsa.gov.

ADDRESSES: Submit comments regarding this burden estimate or any other aspect of this collection of information, including suggestions for reducing this burden to Ms. Jasmeet Seehra, GSA Desk Officer, OMB, Room 10236, NEOB, Washington, DC 20503, and a copy to the Regulatory Secretariat (VPR), General Services Administration, Room 4041, 1800 F Street, NW., Washington, DC 20405. Please cite OMB Control No. 3090–0235, Price Reductions Clause, in all correspondence.

SUPPLEMENTARY INFORMATION:

A. Purpose

The clause at GSAR 552.238–75, Price Reductions, used in multiple award schedule contracts ensures that the Government maintains its relationship with the contractor's customer or category of customers, upon which the contract is predicated. The reason for

the burden increase as it exists now is based on current data updating the number of MAS Schedule contractors.

B. Annual Reporting Burden

Number of Respondents: 18,000.
Total Annual Responses: 36,000.
Average hours per response: 2 hours.
Total Burden Hours: 72,000.
Obtaining copies of proposals: Requesters may obtain a copy of the information collection documents from the General Services Administration, Regulatory Secretariat (VPR), 1800 F Street, NW., Room 4041, Washington, DC 20405, telephone (202) 501–4755. Please cite OMB Control No. 3090–0235, Price Reductions Clause, in all correspondence.

Dated: January 12, 2009

Al Matera,

Director, Office of Acquisition Policy.

[FR Doc. E9–868 Filed 1–15–09; 8:45 am]

BILLING CODE 6820–61–S

DEPARTMENT OF HEALTH AND HUMAN SERVICES

Meeting of the National Vaccine Advisory Committee Vaccine Safety Working Group

AGENCY: Department of Health and Human Services, Office of the Secretary, Office of Public Health and Science.

ACTION: Notice of meeting.

SUMMARY: As stipulated by the Federal Advisory Committee Act, the Department of Health and Human Services (HHS) is hereby giving notice that the National Vaccine Advisory Committee (NVAC) Vaccine Safety Working Group will hold a meeting. The meeting is open to the public. Pre-registration is required for both public attendance and comment. Audio conferencing will be available for listening only.

DATES: The meeting will be held on February 4, 2009, from 8 a.m. to 12:30 p.m.

ADDRESSES: Department of Health and Human Services; Hubert H. Humphrey Building, Room 800, 200 Independence Avenue, SW., Washington, DC 20201.

FOR FURTHER INFORMATION CONTACT: Ms. Kirsten Vannice, National Vaccine Program Office, Department of Health and Human Services, Room 443–H, Hubert H. Humphrey Building, 200 Independence Avenue, SW., Washington, DC 20201. Phone: (202) 690–5566; Fax: (202) 260–1165; e-mail: *kirsten.vannice@hhs.gov.*

SUPPLEMENTARY INFORMATION: Pursuant to Section 2101 of the Public Health Service Act (42 U.S.C. Section 300aa–1), the Secretary of Health and Human Services was mandated to establish the National Vaccine Program to achieve optimal prevention of human infectious diseases through immunization and to achieve optimal prevention against adverse reactions to vaccines. The National Vaccine Advisory Committee was established to provide advice and make recommendations to the Director of the National Vaccine Program on matters related to the Program's responsibilities. The Assistant Secretary for Health serves as Director of the National Vaccine Program.

The NVAC Vaccine Safety Working Group was established to (1) undertake and coordinate a scientific review of the draft Centers for Disease Control and Prevention (CDC) Immunization Safety Office (ISO) Scientific Agenda, and (2) review the current vaccine safety system.

On February 4, 2009, the NVAC Vaccine Safety Working Group will hear and discuss the results of the community activities that occurred to obtain public input on the ISO Scientific Agenda, and a summary of the written comments solicited in a previous **Federal Register** notice from January 2, 2009 (for more information on submitting written comments, please see below). This information will inform the Working Group and the NVAC recommendations on the ISO scientific agenda.

Public attendance at the meeting is limited to space available. Individuals who plan to attend and need special assistance, such as sign language interpretation or other reasonable accommodations, should notify the contact person above at least one week prior to the meeting. Members of the public will have the opportunity to provide comments at the meeting. Public comment will be limited to five minutes per speaker. Pre-registration is required for both public attendance and comment. Individuals who would like to submit written statements to the NVAC Vaccine Safety Working Group should refer to instructions on the **Federal Register** Notice Docket ID fr02ja09–30, January 2, 2009 (Volume 74, Number 1) pages 107–108 (*http://edocket.access.gpo.gov/2009/E8-31196.htm*). Any members of the public who wish to have printed material distributed to NVAC Vaccine Safety Working Group members should submit materials to the Executive Secretary, NVAC, through the contact person listed above prior to close of business January 30, 2009. Audio-conferencing will be available for listening only. The call-in number is as follows: 888–469–2187, Participant Passcode: 2973732.

Dated: January 13, 2009.

Bruce Gellin,

Deputy Assistant Secretary for Health Director, National Vaccine Program Office.

[FR Doc. E9–973 Filed 1–15–09; 8:45 am]

BILLING CODE 4150–44–P

DEPARTMENT OF HEALTH AND HUMAN SERVICES

Centers for Disease Control and Prevention

[30 Day—09–08AX]

Agency Forms Undergoing Paperwork Reduction Act Review

The Centers for Disease Control and Prevention (CDC) publishes a list of information collection requests under review by the Office of Management and Budget (OMB) in compliance with the Paperwork Reduction Act (44 U.S.C. Chapter 35). To request a copy of these requests, call the CDC Reports Clearance Officer at (404) 639–5960 or send an e-mail to *omb@cdc.gov.* Send written comments to CDC Desk Officer, Office of Management and Budget, Washington, DC or by fax to (202) 395–6974. Written comments should be received within 30 days of this notice.

Proposed Project

Sexually Transmitted Disease (STD) Morbidity Surveillance—New—National Center for HIV/AIDS, Viral Hepatitis, STD, and TB Prevention (NCHHSTP), Centers for Disease Control and Prevention (CDC).

Background and Brief Description

The CDC is responsible for the reporting and dissemination of nationally notifiable STD morbidity information for prevention and control purposes in collaboration with state and local health departments. Recent changes in sexually transmitted disease (STD) epidemiology in the United States indicate that the existing passive surveillance for STD does not include all the elements needed in order to control and prevent STDs in the U.S. Towards that end, CDC is proposing a new electronic information collection called STD Morbidity Surveillance that will include information on laboratory confirmation of syphilis infection and risk behaviors of persons infected with syphilis and other STDs. Physicians and other providers collect demographic, risk, and clinical (including laboratory) information from persons diagnosed with notifiable STDs during a clinical encounter or counseling session. The

respondents will submit the information electronically, to the state and local public health departments. Clinical specimens obtained from case-patients are submitted to private or public diagnostic laboratories with laboratory requisition forms which includes information on the provider and case-patient. A subset of the information reported to state health departments from health care providers or laboratories is reported electronically as a case report e-record to CDC's Nationally Notifiable Disease Surveillance System on a weekly basis. CDC estimates that 57 respondents spend 20 minutes each week extracting notifiable STD surveillance information from their electronic information system. CDC staff review STD morbidity data at varying frequencies to identify population subgroups at increased risk for STDs. The target evidence-based intervention strategies, evaluate the impact of ongoing control efforts, thus enhancing our understanding of STD transmission. There is no cost to respondents other than their time. The total estimated annual burden hours are 989.

ESTIMATED ANNUALIZED BURDEN HOURS

Types of respondent	Form name	Number of respondents	Number of responses per respondent	Average burden per response (in hours)
State Health Departments	Electronic STD Case report	50	52	20/60
Territorial Health Agencies	Electronic STD Case report	5	52	20/60
City and county health departments	Electronic STD Case report	2	52	20/60

Dated: January 8, 2009.

Maryam I. Daneshvar,

Acting Reports Clearance Officer, Centers for Disease Control and Prevention.

[FR Doc. E9–888 Filed 1–15–09; 8:45 am]

BILLING CODE 4163–18–P

DEPARTMENT OF HEALTH AND HUMAN SERVICES

Centers for Disease Control and Prevention

[60Day-09–09AJ]

Proposed Data Collections Submitted for Public Comment and Recommendations

In compliance with the requirement of Section 3506(c)(2)(A) of the Paperwork Reduction Act of 1995 for opportunity for public comment on proposed data collection projects, the Centers for Disease Control and Prevention (CDC) will publish periodic summaries of proposed projects. To request more information on the proposed projects or to obtain a copy of the data collection plans and instruments, call 404–639–5960 and send comments to Maryam I. Daneshvar, CDC Acting Reports Clearance Officer, 1600 Clifton Road, MS–D74, Atlanta, GA 30333 or send an e-mail to *omb@cdc.gov.*

Comments are invited on: (a) Whether the proposed collection of information is necessary for the proper performance of the functions of the agency, including whether the information shall have practical utility; (b) the accuracy of the agency's estimate of the burden of the proposed collection of information; (c) ways to enhance the quality, utility, and clarity of the information to be collected; and (d) ways to minimize the burden of the collection of information on respondents, including through the use of automated collection techniques or other forms of information technology. Written comments should be received within 60 days of this notice.

Proposed Project

Centers for Public Health Preparedness Program Evaluation Instruments,—New—Coordinating Office for Terrorism Preparedness & Emergency Response (COTPER), Centers for Disease Control and Prevention (CDC).

Background and Brief Description

Under the Authority of Sections 301(a) and 317(k)(2) of Public Health Service Act, the Centers for Disease Control and Prevention is responsible for administering and monitoring the Centers for Public Health Preparedness (CPHP) Program. The purpose of the CPHP Program is to strengthen terrorism and emergency preparedness by linking academic expertise to state and local health agency needs. The program brings together colleges and universities with a common focus on public health preparedness to establish a national network of education and training resources. Of these institutions, 27 are accredited Schools of Public Health funded through a five-year Cooperative Agreement for years 2004–2009. This program addresses the public health goals described in ''A National Strategy for Terrorism Preparedness and Response: 2003–2008 Strategic Plan'', specifically Imperative Five, a Competent and Sustainable Workforce. Critical objectives under this Imperative are to: (1) Increase the number and type of professionals that comprise a preparedness and response workforce; (2) deliver certification and competency-based training and education; (3) recruit and retain the highest quality workforce; and (4) evaluate the impact of training to assure learning has occurred.

CDC requests OMB approval for a period of one year to collect information beginning in the summer of 2009. CDC is undertaking a summative evaluation of the CPHP Program encompassing the period of the current Cooperative Agreement. In order to complete this evaluation, CDC is proposing five data collection instruments to gather information describing the program's processes and outcomes. These are: (1) Pre-CPHP Interview Document Collection Protocol; (2) CPHP Interview Instrument; (3) CPHP National Partner Interview Instrument (4) CPHP State and Local Partner/Customer Survey Instrument; and (5) CPHP State and Local Partner/Customer Interview Instrument. Collectively, these instruments are needed in order to receive, process, aggregate, evaluate, and disseminate CPHP program information. The information will be used by CDC to document progress toward meeting established program goals and objectives; to evaluate outcomes generated by the collective work of the 27 Centers; to inform the development of a new public health preparedness education and training cooperative agreement program; and to respond to data inquiries made by CDC and other agencies of the federal government.

The Pre-CPHP Interview Document Collection Protocol will be used by CPHP grantees to guide collection and submission of existing documents. The CPHP National Partner Interview Instrument will be used to guide a

telephone interview process with key National Partners familiar with the CPHP program. The categories of questions will be similar to the CPHP Interview Instrument to gather information from the perspective of National Partners. The CPHP State and Local Partner/Customer Survey Instrument will be used to gather information from representatives of organizations that have received training or technical assistance from the CPHP Program. It will be administered electronically with an option for paper copy administration. It is estimated that there will be one request per respondent and a total of 135 respondents with an estimated time for data collection of 30 minutes. The CPHP Partner/Customer Interview Instrument will be used to gather more in-depth information on the same categories of questions from the Survey Instrument. It is estimated that there will be a total of 54 respondents with an estimated time for data collection of 30 minutes.

There are no costs to respondents except their time.

ESTIMATED ANNUALIZED BURDEN HOURS

Respondents	Number of respondents	Number of responses per respondent	Average burden per response (in hours)	Total burden (in hours)
Pre-CPHP Interview Document Collection Protocol—CPHP staff	27	1	2	54
(2) CPHP Interview Instrument—CPHP staff	54	1	2	108
(3) CPHP National Partner Interview Instrument	10	1	2	20
(4) CPHP State and Local Partner/Customer Survey Instrument	135	1	30/60	68
(5) CPHP State and Local Partner/Customer Interview Instrument	54	1	30/60	27
Total				277

Dated: January 8, 2009.

Maryam I. Daneshvar,

Acting Reports Clearance Officer, Centers for Disease Control and Prevention.

[FR Doc. E9–889 Filed 1–15–09; 8:45 am]

BILLING CODE 4163–18–P

DEPARTMENT OF HEALTH AND HUMAN SERVICES

Centers for Disease Control and Prevention

[60 Day–09–09AL]

Proposed Data Collections Submitted for Public Comment and Recommendations

In compliance with the requirement of Section 3506(c)(2)(A) of the Paperwork Reduction Act of 1995 for opportunity for public comment on proposed data collection projects, the Centers for Disease Control and Prevention (CDC) will publish periodic summaries of proposed projects. To request more information on the proposed projects or to obtain a copy of the data collection plans and instruments, call 404–639–5960 and send comments to Maryam I. Daneshvar, CDC Acting Reports Clearance Officer, 1600 Clifton Road, MS-D74, Atlanta, GA 30333 or send an e-mail to *omb@cdc.gov.*

Comments are invited on: (a) Whether the proposed collection of information is necessary for the proper performance of the functions of the agency, including whether the information shall have practical utility; (b) the accuracy of the agency's estimate of the burden of the proposed collection of information; (c) ways to enhance the quality, utility, and clarity of the information to be collected; and (d) ways to minimize the burden of the collection of information on respondents, including through the use of automated collection techniques or other forms of information technology. Written comments should be received within 60 days of this notice.

Proposed Project

The Green Housing Study—New—National Center for Environmental Health (NCEH), Centers for Disease Control and Prevention (CDC).

Background and Brief Description

Green building principles and practices have been shown to reduce energy consumption, but their efficacy in reducing environmental agents such as pesticides, volatile organic compounds (VOCs), fungi, and indoor allergens is not clear. Furthermore, little research has been conducted on health impacts that might be related to green buildings, especially on a nationwide scale. Three main goals of this study are: (1) To compare levels of certain environmental chemical and biological agents in green vs. traditional, multi-family, low-income housing; (2) to ascertain differences in the health of the residents in these homes; and (3) to assess the economic impacts of the ''greening'' of housing-particularly those related to health. These goals will be accomplished in an ongoing building renovation program, ''Mark-to-Market'' (M2M), sponsored by the Department of Housing and Urban Development (HUD). Briefly, the M2M program is a nationwide initiative that encourages owners and purchasers of affordable, multi-family properties to rehabilitate and operate their properties using sustainable green building principles. In partnership with HUD, the CDC will leverage this opportunity to collect survey and biomarker data from residents and to collect environmental measurements in their homes in order to evaluate associations between green housing and health.

This study directly supports the Healthy Homes' health protection goal of the Centers for Disease Control and Prevention (CDC). This investigation is also consistent with CDC's Health Protection Research Agenda, which calls for research to identify the major environmental causes of disease and disability and related risk factors.

Indoor allergens such as those from cockroaches, dust mites, mice, and fungi have been associated with childhood asthma. Also, VOCs and pesticides have been associated with adverse birth outcomes (e.g., low birth weight and prematurity) and delayed neurodevelopment. Given that green principles such as improvement of ventilation systems and elimination of spray pesticides can directly affect the concentrations of chemical and biological agents in air, residents in green housing should theoretically have better health outcomes (e.g., asthma, birth outcomes, and infant neurodevelopment, this in turn will lead to lower healthcare utilization and overall societal costs.

Participants will include pregnant women, mothers and children living in

HUD-subsidized housing that has either been rehabilitated in a green (e.g., case) or a traditional manner (e.g., control) from study sites across the United States. Pregnant women and children with asthma (ages 7–12 years) will donate blood samples (for assessment of allergy) and urine samples (for assessment of pesticide and VOC exposures). The children with asthma (ages 7–12 years) will be also tested for lung function and lung inflammatory markers. Questionnaires regarding home characteristics and respiratory symptoms will be administered at 3-month intervals over a 2-year period. Of the pregnant women enrolled, neurodevelopment of their infant will be tested at ages 1 week and 6 months. Environmental sampling of the air and dust in the participants' homes will be conducted over a 2 year period (once in the home before rehabilitation, and then at four time points after rehabilitation has been completed: Baseline, 6 months, 12 months, and 24 months). Environmental sampling includes measurements of air exchange rate, pesticides, VOCs, indoor allergens, fungi, temperature, humidity, and particulate matter.

There is no cost to respondents other than their time.

ESTIMATED ANNUALIZED BURDEN HOURS

Respondents	Forms	Number of respondents	Number of responses per respondent	Average burden per response (in hours)	Total burden (in hours)
Mothers of enrolled children.	Screening questionnaire	800	1	5/60	067
	Baseline Questionnaire (Home Characteristics).	688	1	15/60	172
	Baseline Questionnaire (for Mother)	688	1	15/60	172
	Baseline Questionnaire (for Children 0–6 years).	688	1	15/60	172
	Baseline Questionnaire (for Children 7–12 with asthma).	688	1	15/60	172
	3, 9, 15, and 18-month Phone contact	688	4	5/60	229
	6, 12, and 24-month Follow-up Questionnaire (for environment).	688	3	10/60	344
	6, 12, and 24-month Follow-up Questionnaire (for women).	688	3	10/60	344
	6, 12, and 24-month Follow-up Questionnaire (for children 0–6).	688	3	10/60	344
	6, 12, and 24-month Follow-up Questionnaire (for asthmatic child 7–12).	688	3	10/60	344
Pregnant women	Screening questionnaire	800	1	5/60	67
	Baseline Questionnaire (Home Characteristics).	688	1	15/60	172
	Baseline Questionnaire (for Pregnant woman).	688	1	15/60	172
	3, 9, 15, and 18-month Phone contact	688	4	5/60	229
	6, 12, and 24-month Follow-up Questionnaire (for environment).	688	3	10/60	344
	6, 12, and 24-month Follow-up Questionnaire (for women).	688	3	10/60	344
	Post-delivery questionnaire	688	1	5/60	57
Total					3745

Dated: January 8, 2009.

Maryam I. Daneshvar,

Acting Reports Clearance Officer, Centers for Disease Control and Prevention.

[FR Doc. E9–890 Filed 1–15–09; 8:45 am]

BILLING CODE 4163–18–P

DEPARTMENT OF HEALTH AND HUMAN SERVICES

Centers for Disease Control and Prevention

Disease, Disability, and Injury Prevention and Control Special Emphasis Panel (SEP): Member Conflict Review, Program Announcement (PA) 07–318

In accordance with Section 10(a)(2) of the Federal Advisory Committee Act (Pub. L. 92–463), the Centers for Disease Control and Prevention (CDC) announces the aforementioned meeting:

Time and Date: 1 p.m.–3 p.m., March 5, 2009 (Closed).

Place: National Institute for Occupational Safety and Health (NIOSH), CDC, 1095 Willowdale Road, Morgantown, West Virginia 26506, telephone: (304) 285–6143.

Status: The meeting will be closed to the public in accordance with provisions set forth in Section 552b(c)(4) and (6), Title 5 U.S.C., and the Determination of the Director, Management Analysis and Services Office, CDC, pursuant to Public Law 92–463.

Matters To Be Discussed: The meeting will include the review, discussion, and evaluation of ''Member Conflict Review, PA 07–318.''

Contact Person for More Information: Chris Langub, PhD, Scientific Review Official, NIOSH, CDC, 2400 Century Center, Atlanta, GA 30333, telephone: (404) 498–2543.

The Director, Management Analysis and Services Office, has been delegated the authority to sign **Federal Register** notices pertaining to announcements of meetings and other committee management activities, for both CDC and the Agency for Toxic Substances and Disease Registry.

Dated: January 9, 2009.

Elaine L. Baker,

Director, Management Analysis and Services Office, Centers for Disease Control and Prevention.

[FR Doc. E9–870 Filed 1–15–09; 8:45 am]

BILLING CODE 4163–18–P

DEPARTMENT OF HEALTH AND HUMAN SERVICES

Centers for Disease Control and Prevention

Disease, Disability, and Injury Prevention and Control Special Emphasis Panel (SEP): Centers for Agricultural Disease and Injury Research, Education and Prevention, Program Announcement Number, PAR06–057

In accordance with Section 10(a)(2) of the Federal Advisory Committee Act (Pub. L. 92–463), the Centers for Disease Control and Prevention (CDC) announces the aforementioned meeting:

Time and Date:

7 p.m.–5 p.m., February 25, 2009 (Closed).
7 p.m.–5 p.m., February 26, 2009 (Closed).
7 p.m.–5 p.m., February 27, 2009 (Closed).

Place: Courtyard Greenville, 2225 Stantonsburg Road, Greenville, North Carolina 27834, telephone: (252) 329–2900.

Status: The meeting will be closed to the public in accordance with provisions set forth in Section 552b(c)(4) and (6), Title 5 U.S.C., and the Determination of the Director, Management Analysis and Services Office, CDC, pursuant to Public Law 92–463.

Matters to be Discussed: The meeting will include the review, discussion, and evaluation of applications received in response to ''Centers for Agricultural Disease and Injury Research, Education and Prevention, PAR06–057.''

Contact Person for More Information: Stephen Olenchock, PhD, Scientific Review Administrator, 1095 Willowdale Road, Morgantown, West Virginia 26505, telephone: (304) 285–6271.

The Director, Management Analysis and Services Office, has been delegated the authority to sign **Federal Register** notices pertaining to announcements of meetings and other committee management activities, for both CDC and the Agency for Toxic Substances and Disease Registry.

Dated: January 8, 2009.

Elaine L. Baker,

Director, Management Analysis and Services Office, Centers for Disease Control and Prevention.

[FR Doc. E9–873 Filed 1–15–09; 8:45 am]

BILLING CODE 4163–18–P

DEPARTMENT OF HEALTH AND HUMAN SERVICES

Centers for Disease Control and Prevention

Disease, Disability, and Injury Prevention and Control Special Emphasis Panel (SEP): Centers for Agricultural Disease and Injury Research, Education and Prevention, Program Announcement Number, PAR06–057

In accordance with Section 10(a)(2) of the Federal Advisory Committee Act (Pub. L. 92–463), the Centers for Disease Control and Prevention (CDC) announces the aforementioned meeting:

Time and Date:

7 p.m.–5 p.m., February 10, 2009 (Closed).
7 p.m.–5 p.m., February 11, 2009 (Closed).
7 p.m.–5 p.m., February 12, 2009 (Closed).

Place: Renaissance Columbus, 50 North 3rd Street, Columbus, Ohio 43215, telephone: (614) 228–5050.

Status: The meeting will be closed to the public in accordance with provisions set forth in Section 552b(c)(4) and (6), Title 5 U.S.C., and the Determination of the Director, Management Analysis and Services Office, CDC, pursuant to Public Law 92–463.

Matters to be Discussed: The meeting will include the review, discussion, and evaluation of applications received in response to ''Centers for Agricultural Disease and Injury Research, Education and Prevention, PAR06–057.''

Contact Person for More Information: Stephen Olenchock, PhD, Scientific Review Administrator, 1095 Willowdale Road, Morgantown, West Virginia 26505, telephone: (304) 285–6271.

The Director, Management Analysis and Services Office, has been delegated the authority to sign **Federal Register** notices pertaining to announcements of meetings and other committee management activities, for both CDC and the Agency for Toxic Substances and Disease Registry.

Dated: January 8, 2009.

Elaine L. Baker,

Director, Management Analysis and Services Office, Centers for Disease Control and Prevention.

[FR Doc. E9–874 Filed 1–15–09; 8:45 am]

BILLING CODE 4163–18–P

DEPARTMENT OF HEALTH AND HUMAN SERVICES

Centers for Disease Control and Prevention

Safety and Occupational Health Study Section (SOHSS), National Institute for Occupational Safety and Health (NIOSH)

In accordance with section 10(a)(2) of the Federal Advisory Committee Act (Pub. L. 92–463), the Centers for Disease Control and Prevention (CDC) announces the following Meeting of the aforementioned committee:

Times and Dates:

8 a.m.–5 p.m., February 17, 2009.
8 a.m.–5 p.m., February 18, 2009.

Place: Embassy Suites Hotel, 1900 Diagonal Road, Alexandria, Virginia 22314, telephone (703)684–5900, fax (703) 684–1403.

Status:

Closed 8 a.m.–5 p.m., February 17, 2009.
Closed 8 a.m.–5 p.m., February 18, 2009.

Purpose: The Safety and Occupational Health Study Section will review, discuss, and evaluate grant application(s) received in response to the Institute's standard grants review and funding cycles pertaining to research issues in occupational safety and health, and allied areas.

It is the intent of NIOSH to support broad-based research endeavors in keeping with the Institute's program goals. This will lead to improved understanding and appreciation for the magnitude of the aggregate health burden associated with occupational injuries and illnesses, as well as to support more focused research projects, which will lead to improvements in the delivery of occupational safety and health services, and the prevention of work-related injury and illness. It is anticipated that research funded will promote these program goals.

Matters To Be Discussed: The meeting will convene to address matters related to the conduct of Study Section business and for the study section to consider safety and occupational health-related grant applications.

These portions of the meeting will be closed to the public in accordance with provisions set forth in Section 552b(c)(4) and (6), Title 5 U.S.C., and the Determination of the Director, Management Analysis and Services Office, Centers for Disease Control and Prevention, pursuant to Section 10(d) Pub. L. 92–463.

Agenda items are subject to change as priorities dictate.

Contact Person for More Information: Price Connor, PhD, NIOSH Health Scientist, 1600 Clifton Road, NE., Mailstop E–20, Atlanta, Georgia 30333, telephone (404) 498–2511, fax (404)498–2571.

The Director, Management Analysis and Services Office, has been delegated the authority to sign **Federal Register** notices pertaining to announcements of meetings and other committee management activities for both CDC and the Agency for Toxic Substances and Disease Registry.

Dated: January 9, 2009.

Elaine L. Baker,

Director, Management Analysis and Services Office, Centers for Disease Control and Prevention.

[FR Doc. E9–872 Filed 1–15–09; 8:45 am]

BILLING CODE 4163–18–P

DEPARTMENT OF HEALTH AND HUMAN SERVICES

Centers for Medicare & Medicaid Services

[Document Identifier: CMS–8003, CMS–10185 and CMS–10164]

Agency Information Collection Activities: Proposed Collection; Comment Request

AGENCY: Centers for Medicare & Medicaid Services.

In compliance with the requirement of section 3506(c)(2)(A) of the Paperwork Reduction Act of 1995, the Centers for Medicare & Medicaid Services (CMS) is publishing the following summary of proposed collections for public comment. Interested persons are invited to send comments regarding this burden estimate or any other aspect of this collection of information, including any of the following subjects: (1) The necessity and utility of the proposed information collection for the proper performance of the agency's functions; (2) the accuracy of the estimated burden; (3) ways to enhance the quality, utility, and clarity of the information to be collected; and (4) the use of automated collection techniques or other forms of information technology to minimize the information collection burden.

1. *Type of Information Collection Request:* Revision of a currently approved collection; *Title of Information Collection:* Home and Community Based Waiver Requests and Supporting Regulations in 42 CFR 440.180 and 441.300–310; *Use:* Under a Secretarial waiver, States may offer a wide array of home and community-based services to individuals who would otherwise require institutionalization. States requesting a waiver must provide certain assurances, documentation and cost and utilization estimates which are reviewed, approved and maintained for the purpose of identifying/verifying States' compliance with such statutory and regulatory requirements. CMS has recently revised this data collection tool, as well as the methodology by which the data is collected. *Form Number:* CMS–8003 (OMB # 0938–0449); *Frequency:* Annually; *Affected Public:* State, Local or Tribal Governments; *Number of Respondents:* 49; *Total Annual Responses:* 71; *Total Annual Hours:* 9,059.

2. *Type of Information Collection Request:* Revision of a currently approved collection; *Title of Information Collection:* Medicare Part D Reporting Requirements and Supporting Regulations under 42 CFR 423.505; *Form Number:* CMS–10185 (OMB # 0938–0992); *Use:* Title I, Part 423, § 423.514 describes CMS' regulatory authority to establish requirements for Part D sponsors. It is noted that each Part D plan sponsor must have an effective procedure to develop, compile, evaluate, and report to CMS, its enrollees, and the general public, at the times and in the manner that CMS requires, statistics in the following areas: (1) The cost of its operations; (2) The availability of utilization of its services; (3) The availability, accessibility; and acceptability of its services; (4) Information demonstrating that the Part D plan sponsor has a fiscally sound operation; and (5) other matters that CMS may require. Subsection 423.505 of the Medicare Prescription Drug Modernization and Modernization Act establishes as a contract provision that Part D Sponsors must comply with the reporting requirements for submitting drug claims and related information to CMS. Data collected via Medicare Part D Reporting Requirements will be an integral resource for oversight, monitoring, compliance and auditing activities necessary to ensure quality provision of the Medicare Prescription Drug Benefit to beneficiaries. Refer to the ''Crosswalk of Changes between the CY2009 and CY2010 Part D Reporting Requirements'' document to view a list of current changes. *Frequency:* Reporting—yearly, quarterly and semi-annually; *Affected Public:* Business or other for-profit; *Number of Respondents:* 4,526; *Total Annual Responses:* 343,976; *Total Annual Hours:* 154,610.

3. *Type of Information Collection Request:* Extension of a currently approved collection; *Title of Information Collection:* Electronic Data Interchange (EDI Enrollment Form and Medicare EDI Registration Form; *Form No.:* CMS–10164 (OMB # 0938–983); *Use:* Federal law requires that CMS take precautions to minimize the security risk to Federal information systems. Accordingly, CMS is requiring that trading partners who wish to conduct the Electronic Data Interchange (EDI) transactions provide certain assurances as a condition of receiving access to the Medicare system for the purpose of conducting EDI exchanges. Health care providers, clearinghouses, and health plans that wish to access the Medicare system are required to complete this form. The information will be used to assure that those entities that access the Medicare system are aware of applicable provisions and penalties; *Frequency:* Recordkeeping and Reporting—Other (one-time only); *Affected Public:* Business or other for-profit, not-for-profit institutions; *Number of Respondents:* 240,000; *Total Annual Responses:* 240,000; *Total Annual Hours:* 80,000.

To obtain copies of the supporting statement and any related forms for the proposed paperwork collections referenced above, access CMS' Web Site at *http://www.cms.hhs.gov/PaperworkReductionActof1995,* or e-mail your request, including your address, phone number, OMB number, and CMS document identifier, to *Paperwork@cms.hhs.gov,* or call the Reports Clearance Office on (410) 786–1326.

In commenting on the proposed information collections please reference the document identifier or OMB control number. To be assured consideration, comments and recommendations must be submitted in one of the following ways by *March 17, 2009:*

1. *Electronically.* You may submit your comments electronically to *http://www.regulations.gov.* Follow the instructions for ''Comment or Submission'' or ''More Search Options'' to find the information collection document(s) accepting comments.

2. *By regular mail.* You may mail written comments to the following address: CMS, Office of Strategic Operations and Regulatory Affairs, Division of Regulations Development, Attention: Document Identifier/OMB Control Number _____, Room C4–26–05, 7500 Security Boulevard, Baltimore, Maryland 21244–1850.

Dated: January 8, 2009.

Michelle Shortt,

Director, Regulations Development Group, Office of Strategic Operations and Regulatory Affairs.

[FR Doc. E9–685 Filed 1–15–09; 8:45 am]

BILLING CODE 4120–01–P

DEPARTMENT OF HEALTH AND HUMAN SERVICES

Centers for Medicare & Medicaid Services

[CMS–3210–N]

Medicare Program; Meeting of the Medicare Evidence Development & Coverage Advisory Committee—March 18, 2009

AGENCY: Centers for Medicare & Medicaid Services (CMS), HHS.

ACTION: Notice of meeting.

SUMMARY: This notice announces that a public meeting of the Medicare

Evidence Development & Coverage Advisory Committee (MEDCAC) (''Committee'') will be held on Wednesday, March 18, 2009. The Committee generally provides advice and recommendations concerning the adequacy of scientific evidence needed to determine whether certain medical items and services can be covered under the Medicare statute. This meeting will focus on the use of Bayesian statistics to interpret evidence in making coverage decisions. The meeting will introduce Bayesian concepts, contrast Bayesian approaches with frequentist approaches, and provide some examples of using Bayesian techniques for meta-analyses. Bayesian analysis is a statistical technique in which prior evidence is used to update or to newly infer the probability that a hypothesis may be true. This meeting is open to the public in accordance with the Federal Advisory Committee Act (5 U.S.C. App. 2, section 10(a)).

DATES: *Meeting Date:* The public meeting will be held on Wednesday, March 18, 2009 from 7:30 a.m. until 4:30 p.m., daylight savings time (d.s.t).

Deadline for Submission of Written Comments: Written comments must be received at the address specified in the **ADDRESSES** section of this notice by 5 p.m., eastern standard time (e.s.t) on February 16, 2009. Once submitted, all comments are final.

Deadline for Speaker Registration and Presentation Materials: The deadline to register to be a speaker and to submit Powerpoint presentation materials and writings that will be used in support of an oral presentation, is 5 p.m., e.s.t. on Monday, February 16, 2009. Speakers may register by phone or via e-mail by contacting the person listed in the **FOR FURTHER INFORMATION CONTACT** section of this notice. Presentation materials must be received at the address specified in the **ADDRESSES** section of this notice.

Deadline for All Other Attendees Registration: Individuals may register by phone or via e-mail by contacting the person listed in the **FOR FURTHER INFORMATION CONTACT** section of this notice by 5 p.m., d.s.t. on Wednesday, March 11, 2009.

Deadline for Submitting a Request for Special Accommodations: Persons attending the meeting who are hearing or visually impaired, or have a condition that requires special assistance or accommodations, are asked to contact the Executive Secretary as specified in the **FOR FURTHER INFORMATION CONTACT** section of this notice no later than 5 p.m., d.s.t. Friday, March 11, 2009.

ADDRESSES: *Meeting Location:* The meeting will be held in the main auditorium of the Centers for Medicare & Medicaid Services, 7500 Security Boulevard, Baltimore, MD 21244.

Submission of Presentations and Comments: Presentation materials and written comments that will be presented at the meeting must be submitted via e-mail to *MedCACpresentations@cms.hhs.gov* or by regular mail to the contact listed in the **FOR FURTHER INFORMATION CONTACT** section of this notice by the date specified in the **DATES** section of this notice.

FOR FURTHER INFORMATION CONTACT: Maria Ellis, Executive Secretary for MEDCAC, Centers for Medicare & Medicaid Services, Office of Clinical Standards and Quality, Coverage and Analysis Group, C1–09–06, 7500 Security Boulevard, Baltimore, MD 21244 or contact Ms. Ellis by phone, 410–786–0309 or via e-mail at *Maria.Ellis@cms.hhs.gov.*

SUPPLEMENTARY INFORMATION:

I. Background

MEDCAC, formerly known as the Medicare Coverage Advisory Committee (MCAC), provides advice and recommendations to CMS regarding clinical issues. (For more information on MCAC, see the December 14, 1998 **Federal Register** (63 FR 68780.)) This notice announces the March 18, 2009, public meeting of the Committee. During this meeting, the Committee will discuss the use of Bayesian statistics to interpret evidence in making coverage decisions. The meeting will introduce Bayesian concepts, contrast Bayesian approaches with frequentist approaches, and provide some examples of using Bayesian techniques for meta-analyses. Bayesian analysis is a statistical technique in which prior evidence is used to update or to newly infer the probability that a hypothesis may be true. Background information about this topic, including panel materials, is available at *http://www.cms.hhs.gov/coverage.* We encourage the participation of appropriate organizations with expertise in Bayesian statistics, meta-analyses, and clinical trial design and analyses.

II. Meeting Format

This meeting is open to the public. The Committee will hear oral presentations from the public for approximately 45 minutes. The Committee may limit the number and duration of oral presentations to the time available. Your comments should focus on issues specific to the list of topics that we have proposed to the Committee. The list of research topics to be discussed at the meeting will be available on the following Web site prior to the meeting: *http://www.cms.hhs.gov/mcd/index_list.asp?list_type=mcac.* We require that you declare at the meeting whether you have any financial involvement with manufacturers (or their competitors) of any items or services being discussed.

The Committee will deliberate openly on the topics under consideration. Interested persons may observe the deliberations, but the Committee will not hear further comments during this time except at the request of the chairperson. The Committee will also allow a 15-minute unscheduled open public session for any attendee to address issues specific to the topics under consideration. At the conclusion of the day, the members will vote and the Committee will make its recommendation(s) to CMS.

III. Registration Instructions

CMS's Coverage and Analysis Group is coordinating meeting registration. While there is no registration fee, individuals must register to attend. You may register by contacting the person listed in the **FOR FURTHER INFORMATION CONTACT** section of this notice by the deadline listed in the **DATES** section of this notice. Please provide your full name (as it appears on your state-issued driver's license), address, organization, telephone, fax number(s), and e-mail address. You will receive a registration confirmation with instructions for your arrival at the CMS complex or you will be notified the seating capacity has been reached.

IV. Security, Building, and Parking Guidelines

This meeting will be held in a Federal government building; therefore, Federal security measures are applicable. We recommend that confirmed registrants arrive reasonably early, but no earlier than 45 minutes prior to the start of the meeting, to allow additional time to clear security. Security measures include the following:

- Presentation of government-issued photographic identification to the Federal Protective Service or Guard Service personnel.
- Inspection of vehicle's interior and exterior (this includes engine and trunk inspection) at the entrance to the grounds. Parking permits and instructions will be issued after the vehicle inspection.
- Inspection, via metal detector or other applicable means, of all persons

entering the building. We note that all items brought into CMS, whether personal or for the purpose of presentation or to support a presentation, are subject to inspection. We cannot assume responsibility for coordinating the receipt, transfer, transport, storage, set-up, safety, or timely arrival of any personal belongings or items used for presentation or to support a presentation.

Note: Individuals who are not registered in advance will not be permitted to enter the building and will be unable to attend the meeting. The public may not enter the building earlier than 45 minutes prior to the convening of the meeting. All visitors must be escorted in areas other than the lower and first floor levels in the Central Building.

Authority: 5 U.S.C. App. 2, section 10(a).

Catalog of Federal Domestic Assistance Program No. 93.773, Medicare—Hospital Insurance; and Program No. 93.774, Medicare—Supplementary Medical Insurance Program.

Dated: January 9, 2009.

Barry M. Straube,

Chief Medical Officer and Director, Office of Clinical Standards and Quality, Centers for Medicare & Medicaid Services.

[FR Doc. E9–943 Filed 1–15–09; 8:45 am]

BILLING CODE 4120–01–P

DEPARTMENT OF HEALTH AND HUMAN SERVICES

Administration for Children and Families

Statement of Mission, Organization, Functions, and Delegations of Authority

This notice amends Part K of the Statement of Mission, Organization, Functions, and Delegations of Authority of the Department of Health and Human Services (HHS), Administration for Children and Families (ACF), as follows: Chapter KE, Administration for Native Americans (ANA), as last amended in 60 FR 17084–85, 04/04/95. This notice establishes the Division of Policy, Planning and Evaluation and moves the support staff function to the Office of the Commissioner. The changes are as follows:

I. Chapter KE. Administration for Native Americans

A. Delete KE. 00 Mission in its entirety and replace with the following:

KE. 00 Mission. The mission of the Administration for Native Americans is to promote the goal of self-sufficiency and cultural preservation for Native Americans by providing social and economic development opportunities through financial assistance, training, and technical assistance to eligible Tribes and Native American communities, including American Indians, Alaska Natives, Native Hawaiians, and other Native Pacific Islander organizations. ANA provides funding for community-based projects that are designed to improve the lives of Native children and families and reduce long-term dependency on public assistance. Competitive funding authorized under the Native American Programs Act of 1974, as amended, for community-based projects is provided through three competitive discretionary grant programs to eligible Tribes and non-profit Native American organizations: Social and economic development, language preservation, and environmental regulatory enhancement.

B. Delete KE. 10 Organization in its entirety and replace with the following:

KE.10 Organization. The Administration for Native Americans is headed by a Commissioner who is confirmed by the Senate and reports directly to the Assistant Secretary for Children and Families.

The ANA organization includes the: Office of the Commissioner (KEA); Intra-Departmental Council on Native American Affairs (KEB); Division of Program Operations (KEC); Division of Policy, Planning and Evaluation (KED).

C. Delete KE.20 Functions in its entirety and replace with the following:

KE. 20 Functions

A. The Office of the Commissioner provides executive leadership and management strategies for all components of ANA. As required by statute, the Commissioner is Chair of the Intra-Departmental Council on Native American Affairs and advises the Secretary on all matters affecting Native Americans that involve the Department. The Commissioner serves as an effective and visible advocate on behalf of Native Americans within the Department, and with other departments and agencies of the Federal Government regarding all Federal policies affecting Native Americans. The Commissioner provides policy direction and guidance to ACF Regional Offices with respect to programs for Urban Indians, off-Reservation Indians, and other Native American projects in Hawaii and the Pacific Islands. The Commissioner oversees the Native Hawaiian Revolving Loan Fund administered by the Office of Hawaiian Affairs. In the absence of the Commissioner, the Deputy Commissioner is responsible for all organizational management.

The Management Operations Staff (MOS) is responsible for ANA Budget and Administrative functions. MOS coordinates ANA budget activities, the ANA funding decision memo, data collection, personnel actions, ANA's electronic library, tracking of required grant reports, and oversees contract expenditures. The staff members control the flow of correspondence, including receipt of and response to Freedom of Information Act requests.

B. The Commissioner is the Chair of the Intra-Departmental Council on Native American Affairs (ICNAA) and advises the Secretary on Native American issues. ICNAA staff members provide support to the Commissioner. ICNAA develops and promotes HHS policy to provide greater access and quality services for American Indians, Alaska Natives, and Native Americans (AI/AN/NAs) throughout the Department and where possible, the Federal Government; promotes implementation of HHS policy and agency plans on consultation with AI/AN/NAs and Tribal Governments; identifies and develops legislative, administrative, and regulatory proposals that promotes an effective, meaningful AI/AN/NA policy to improve health and human services for AI/AN/NAs; identifies and develops comprehensive Departmental strategy proposal to promote self-sufficiency and self-determination for all AI/AN/NA people; and promotes the Tribal/Federal government-to-government relationship on a Department-wide basis in accordance with Presidential Executive Order.

C. The Division of Program Operations (DPO) is responsible for the administration of discretionary grant programs to eligible Tribes and non-profit Native American organizations. The responsibilities include (1) Annual grant competitions and coordination of the panel review process, (2) development of ANA's Program Announcements, (3) grant oversight, and (4) grant close-out procedures. The DPO also manages and coordinates activities that support the ACF Native American Affairs Workgroup.

D. The Division of Policy, Planning and Evaluation (DPPE) is responsible for development of organizational policies and planning; community impact evaluation; management of quarterly grantee project assessment; oversight of training and technical contracts; coordination of training and technical assistance activities in Alaska, the Pacific Basin, and the lower forty-eight states; development of organizational and Congressional reports; and completion of special organizational

studies. In coordination with the Office of Planning, Research and Evaluation, DPPE coordinates ANA's performance goals.

Dated: January 9, 2009.

Daniel C. Schneider,

Acting Assistant Secretary for Children and Families.

[FR Doc. E9–983 Filed 1–15–09; 8:45 am]

BILLING CODE 4184–01–P

DEPARTMENT OF HEALTH AND HUMAN SERVICES

Food and Drug Administration

[Docket No. FDA–2009–D–0001]

Draft Guidance for Industry on Standards for Securing the Drug Supply Chain—Standardized Numerical Identification for Prescription Drug Packages; Availability

AGENCY: Food and Drug Administration, HHS.

ACTION: Notice.

SUMMARY: The Food and Drug Administration (FDA) is announcing the availability of a draft guidance for industry entitled ''Standards for Securing the Drug Supply Chain—Standardized Numerical Identification for Prescription Drug Packages.'' This draft guidance is being issued under the Federal Food, Drug, and Cosmetic Act (the act), which requires FDA to develop standardized numerical identifiers for prescription drugs. We are also requesting responses from interested stakeholders to questions posed in this **Federal Register** notice related to the draft guidance.

DATES: Although you can comment on any guidance at any time (see 21 CFR 10.115(g)(5)), to ensure that the agency considers your comment on this draft guidance before it begins work on the final version of the guidance, submit written or electronic comments on the draft guidance by April 16, 2009.

ADDRESSES: Submit written requests for single copies of the draft guidance to the Division of Drug Information, Center for Drug Evaluation and Research, Food and Drug Administration, 10903 New Hampshire Ave., Bldg. 51, rm. 2201, Silver Spring, MD 20993–0002 or to the Office of Communication, Outreach and Development (HFM–40), Center for Biologics Evaluation and Research (CBER), Food and Drug Administration, 1401 Rockville Pike, suite 200N, Rockville, MD 20852–1448. Send one self-addressed adhesive label to assist that office in processing your requests. The draft guidance may also be obtained by mail by calling CBER at 1–800–835–4709 or 301–827–1800. Submit written comments on the draft guidance to the Division of Dockets Management (HFA–305), Food and Drug Administration, 5630 Fishers Lane, rm. 1061, Rockville, MD 20852. Submit electronic comments to *http://www.regulations.gov*. See the **SUPPLEMENTARY INFORMATION** section for electronic access to the draft guidance document.

FOR FURTHER INFORMATION CONTACT:

Ilisa B.G. Bernstein, Office of the Commissioner/Office of Policy, Food and Drug Administration, 10903 New Hampshire Ave., Silver Spring, MD 20993–0002, 301–796–4840, e-mail: *ilisa.bernstein@fda.hhs.gov*;

Stephen Ripley, Center for Biologics Evaluation and Research (HFM–17), Food and Drug Administration, 1401 Rockville Pike, suite 200N, Rockville, MD 20852, 301–827–6210, e-mail: *Stephen.ripley@fda.hhs.gov*;

Jennifer Devine, Center for Drug Evaluation and Research, 10903 New Hampshire Ave.,Silver Spring, MD 20993–0002, 301–796–3347, e-mail: *Jennifer.devine@fda.hhs.gov*.

SUPPLEMENTARY INFORMATION:

I. Background

FDA is announcing the availability of a draft guidance for industry entitled ''Draft Guidance for Industry on Standards for Securing the Drug Supply Chain—Standardized Numerical Identification for Prescription Drug Packages.'' On September 27, 2007, the Food and Drug Administration Amendments Act of 2007 (FDAAA) (Public Law 110–85) was signed into law. Section 913 of this legislation created section 505D of the act, which requires the Secretary of Health and Human Services (the Secretary) to develop standards and identify and validate effective technologies for the purpose of securing the drug supply chain against counterfeit, diverted, subpotent, substandard, adulterated, misbranded, or expired drugs. Section 505D of the act directs the Secretary to consult with specific entities to prioritize and develop standards for identification, validation, authentication, and tracking and tracing of prescription drugs. No later than 30 months after the date of enactment of FDAAA, the statute also directs the Secretary to develop a standardized numerical identifier (SNI) to be applied to a prescription drug at the point of manufacturing and repackaging at the package or pallet level, sufficient to facilitate the identification, validation, authentication, and tracking and tracing of the prescription drug. An SNI applied at the point of repackaging is to be linked to the SNI applied at the point of manufacturing, and to the extent practicable, the SNI should be harmonized with international consensus standards for such an identifier. (See section 505D(b)(2) of the act.) The provisions in section 505D(b) of the act complement and build on FDA's longstanding efforts to further secure the U.S. drug supply.

FDA sought public comment on specific questions related to development of an SNI. We received 59 comments from a range of stakeholders including manufacturers, wholesalers, pharmacies, trade and health professional organizations, technology vendors, health professionals, consumers, and state governments. The standards included in this draft guidance are based on information received in response to our request for comment and the agency's familiarity with identification standards already in use for certain prescription biologics.

This draft guidance addresses only package-level SNI. Linking of a repackager SNI to a manufacturer SNI is not addressed in this guidance. Additionally, standards for track and trace, authentication, and validation are not included in this guidance. This draft guidance is intended to be the first of several guidances and regulations that FDA may issue to implement section 505D of the act; issuance of this guidance is intended to assist with the development of standards and systems for identification, authentication, and tracking and tracing of prescription drugs.

This draft guidance is being issued consistent with FDA's good guidance practices regulation (21 CFR 10.115). The draft guidance, when finalized, will represent the agency's current thinking on Standards for Drug Supply Chain Security—Standardized Numerical Identification for Prescription Drug Packages. It does not create or confer any rights for or on any person and does not operate to bind FDA or the public. An alternative approach may be used if such approach satisfies the requirements of the applicable statutes and regulations.

II. Request for Information

To assist us in finalizing the draft guidance and aid us in future guidance development and rulemaking related to section 505D of the act, we are seeking responses from interested stakeholders on the following questions. We also

welcome comment on any aspect of the draft guidance.

1. We believe that the serialized National Drug Code (sNDC) described in the draft guidance is appropriate for package level identification for most prescription drugs; however, it might not be useful at the pallet or other intermediate level, such as the case. We did not receive many comments related to standards for numerical identification at the case or pallet level and would like broader input on this subject. Please comment on whether there are any standards that would be appropriate for serialization or other numerical identification at the case or pallet level.

2. Some comments recommended that the SNI allow for alpha-numeric serial numbers in order to increase the choices for the numbers. FDA's draft guidance recommends that the SNI for most prescription drug packages be an sNDC, consisting of the NDC plus a unique 8-digit numerical serial number. Given the FDA recommendation for SNI, please comment on the necessity of having the serial number allow for alpha-numeric possibilities and under what standards this might be achieved.

3. Blood and blood components currently use either the ISBT 128 standard or Codabar for product package identification. In addition, hematopoietic stem cells derived from peripheral and cord blood use the ISBT 128 standard for product package identification. Please comment on whether these standards should be designated as the SNI for such products.

III. Comments

Interested persons may submit to the Division of Dockets Management (see **ADDRESSES**) written or electronic comments regarding this document. Submit a single copy of electronic comments or two paper copies of any mailed comments, except that individuals may submit one paper copy. Comments are to be identified with the docket number found in brackets in the heading of this document. Received comments may be seen in the Division of Dockets Management between 9 a.m. and 4 p.m., Monday through Friday.

Please note that on January 15, 2008, the FDA Division of Dockets Management Web site transitioned to the Federal Dockets Management System (FDMS). FDMS is a Government-wide, electronic docket management system. Electronic comments or submissions will be accepted by FDA only through FDMS at *http://www.regulations.gov*.

III. Electronic Access

Persons with access to the Internet may obtain the document at *http://www.fda.gov/cder/guidance/index.htm*, *http://www.fda.gov/cber/guidelines.htm*, or *http://www.regulations.gov*.

Dated: January 8, 2009.

Jeffrey Shuren,

Associate Commissioner for Policy and Planning.

[FR Doc. E9–833 Filed 1–15–09; 8:45 am]

BILLING CODE 4160–01–S

DEPARTMENT OF HEALTH AND HUMAN SERVICES

Food and Drug Administration

[Docket No. FDA–2008–D–0659]

Draft Guidance for Industry: Current Good Tissue Practice (CGTP) and Additional Requirements for Manufacturers of Human Cells, Tissues, and Cellular and Tissue-Based Products (HCT/Ps); Availability

AGENCY: Food and Drug Administration, HHS.

ACTION: Notice.

SUMMARY: The Food and Drug Administration (FDA) is announcing the availability of a draft document entitled ''Guidance for Industry: Current Good Tissue Practice (CGTP) and Additional Requirements for Manufacturers of Human Cells, Tissues, and Cellular and Tissue-Based Products (HCT/Ps)'' dated January 2009. The draft guidance document provides establishments that manufacture HCT/Ps with recommendations for complying with CGTP requirements.

DATES: Although you can comment on any guidance at any time (see 21 CFR 10.115(g)(5)), to ensure that the agency considers your comment on this draft guidance before it begins work on the final version of the guidance, submit written or electronic comments on the draft guidance by April 16, 2009.

ADDRESSES: Submit written requests for single copies of the draft guidance to the Office of Communication, Training, and Manufacturers Assistance (HFM–40), Center for Biologics Evaluation and Research (CBER), Food and Drug Administration, 1401 Rockville Pike, suite 200N, Rockville, MD 20852–1448. Send one self-addressed adhesive label to assist the office in processing your requests. The draft guidance may also be obtained by mail by calling CBER at 1–800–835–4709 or 301–827–1800. See the **SUPPLEMENTARY INFORMATION** section for electronic access to the draft guidance document.

Submit written comments on the draft guidance to the Division of Dockets Management (HFA–305), Food and Drug Administration, 5630 Fishers Lane, rm. 1061, Rockville, MD 20852. Submit electronic comments to *http://www.regulations.gov*.

FOR FURTHER INFORMATION CONTACT: Brenda R. Friend, Center for Biologics Evaluation and Research (HFM–17), Food and Drug Administration, 1401 Rockville Pike, suite 200N, Rockville, MD 20852–1448, 301–827–6210.

SUPPLEMENTARY INFORMATION:

I. Background

FDA is announcing the availability of a draft document entitled ''Guidance for Industry: Current Good Tissue Practice (CGTP) and Additional Requirements for Manufacturers of Human Cells, Tissues, and Cellular and Tissue-Based Products (HCT/Ps)'' dated January 2009. This guidance provides establishments that manufacture HCT/Ps with recommendations for complying with CGTP requirements under part 1271 (21 CFR Part 1271), subpart D (Current Good Tissue Practice), and requirements under part 1271, subpart E (Additional Requirements for Establishments Described in § 1271.10). This guidance also addresses whether the establishment registration and HCT/P listing requirements under part 1271, subparts A and B apply in certain instances.

The draft guidance is being issued consistent with FDA's good guidance practices regulation (21 CFR 10.115). The draft guidance, when finalized, will represent FDA's current thinking on this topic. It does not create or confer any rights for or on any person and does not operate to bind FDA or the public. An alternative approach may be used if such approach satisfies the requirement of the applicable statutes and regulations.

II. Paperwork Reduction Act of 1995

This draft guidance refers to previously approved collections of information found in FDA regulations. These collections of information are subject to review by the Office of Management and Budget (OMB) under the Paperwork Reduction Act of 1995 (44 U.S.C. 3501–3520). The collections of information in part 1271, subparts D and E, and §§ 1271.10 and 1271.21 have been approved under OMB Control No. 0910–0543.

III. Commentsuidance is being distributed for comment purposes only and is not intended for implementation at this time. Interested persons may submit to the Division of Dockets Management (see ADDRESSES) written or electronic comments regarding the draft guidance. Submit a single copy of electronic comments or two paper copies of any mailed comments, except that individuals may submit one paper copy. Comments are to be identified with the docket number found in the brackets in the heading of this document. A copy of the draft guidance and received comments are available for public examination in the Division of Dockets Management between 9 a.m. and 4 p.m., Monday through Friday.

Please note that on January 15, 2008, the FDA Division of Dockets Management Web site transitioned to the Federal Dockets Management System (FDMS). FDMS is a Government-wide, electronic docket management system. Electronic comments or submissions will be accepted by FDA only through FDMS at *http://www.regulations.gov*.

IV. Electronic Access

Persons with access to the Internet may obtain the draft guidance at either *http://www.fda.gov/cber/guidelines.htm* or *http://www.regulations.gov*.

Dated: January 13, 2009.

Jeffrey Shuren,

Associate Commissioner for Policy and Planning.

[FR Doc. E9–919 Filed 1–15–09; 8:45 am]

BILLING CODE 4160–01–S

DEPARTMENT OF HEALTH AND HUMAN SERVICES

Food and Drug Administration

[Docket No. FDA–2008–D–0510]

Draft Guidance for Industry: Submission of Laboratory Packages by Accredited Laboratories; Availability

AGENCY: Food and Drug Administration, HHS.

ACTION: Notice.

SUMMARY: The Food and Drug Administration (FDA) is announcing the availability of a draft document entitled ''Guidance for Industry: Submission of Laboratory Packages by Accredited Laboratories.'' The draft guidance document provides information and recommendations about accreditation standards for laboratories and the quality and type of data that accredited laboratories produce to support testing results submitted to FDA about the admissibility of detained articles offered for import. We are taking this action under a recommendation made by the President's Interagency Working Group on Import Safety (Working Group).

DATES: Although you can comment on any guidance at any time (see 21 CFR 10.115(g)(5)), to ensure that the agency considers your comment on this draft guidance before it begins work on the final version of the guidance, submit written or electronic comments on the draft guidance by April 16, 2009.

ADDRESSES: Submit written requests for single copies of the draft guidance to the Office of Executive Operations (HFC–2), Food and Drug Administration, 5600 Fishers Lane, Rockville, MD 20857. Send one self-addressed adhesive label to assist that office in processing your requests.

Submit written comments on the draft guidance to the Division of Dockets Management (HFA–305), Food and Drug Administration, 5630 Fishers Lane, rm. 1061, Rockville, MD 20852. Submit electronic comments to *http://www.regulations.gov*. See the **SUPPLEMENTARY INFORMATION** section for electronic access to the draft guidance document.

FOR FURTHER INFORMATION CONTACT: Donna Porter, Division of Field Science (HFA–141), Office of Regulatory Affairs, Food and Drug Administration, 5600 Fishers Lane, Rockville, MD 20857, 301–827–7605.

SUPPLEMENTARY INFORMATION:

I. Background

FDA is announcing the availability of a draft document entitled ''Guidance for Industry: Submission of Laboratory Packages by Accredited Laboratories.'' The draft guidance is about accreditation standards for laboratories and about the quality and type of data that accredited laboratories should produce in support of testing results submitted to FDA pertaining to the admissibility of detained articles offered for import of all product types (i.e., biological products, drugs, devices, and food) that we regulate. FDA is taking this action under a recommendation made by the President's Interagency Working Group on Import Safety (Working Group). The Working Group was to conduct a comprehensive review of the U.S. import system and identify ways to further increase the safety of imports entering the country, and it presented its initial findings to the President on September 10, 2007, in a report entitled ''Protecting American Consumers Every Step of the Way: A Strategic Framework for Continual Improvement in Import Safety.''

On November 6, 2007, the Working Group presented to the President its Import Safety Action Plan (Action Plan), which contains short- and long-term recommendations for continuing to improve the safety of imports entering the United States. The Action Plan recommended that FDA issue guidance that ''would set standards for the sampling and testing of imported products, including the use of accredited laboratories submitting data to FDA to assist in evaluating whether an appearance of a violation may be resolved.''

The issuance of the draft guidance is, therefore, consistent with the Action Plan and also consistent with FDA's good guidance practices regulation (21 CFR 10.115). The draft guidance, when finalized, will represent FDA's current thinking on this topic. It does not create or confer any rights for or on any person and does not operate to bind FDA or the public. An alternative approach may be used if such approach satisfies the requirements of the applicable statutes and regulations.

II. Comments

The draft guidance is being distributed for comment purposes only and is not intended for implementation at this time. Interested persons may submit to the Division of Dockets Management (see **ADDRESSES**) written or electronic comments regarding the draft guidance. Submit a single copy of electronic comments or two paper copies of any mailed comments, except that individuals may submit one paper copy. Comments are to be identified with the docket number found in brackets in the heading of this document. A copy of the draft guidance and received comments are available for public examination in the Division of Dockets Management between 9 a.m. and 4 p.m., Monday through Friday.

Please note that on January 15, 2008, the FDA Division of Dockets Management Web site transitioned to the Federal Dockets Management System (FDMS). FDMS is a Government-wide, electronic docket management system. Electronic comments or submissions will be accepted by FDA only through FDMS at *http://www.regulations.gov*.

III. Electronic Access

Persons with access to the Internet may obtain the draft guidance at either *http://www.fda.gov/ora* or *http://www.regulations.gov*.

Dated: January 9, 2009.

Jeffrey Shuren,

Associate Commissioner for Policy and Planning.

[FR Doc. E9–837 Filed 1–15–09; 8:45 am]

BILLING CODE 4160–01–S

DEPARTMENT OF HEALTH AND HUMAN SERVICES

Food and Drug Administration

[Docket No. FDA–2008–D–0394]

Guidance for Industry on Regulation of Genetically Engineered Animals Containing Heritable recombinant DNA Constructs; Availability

AGENCY: Food and Drug Administration, HHS.

ACTION: Notice.

SUMMARY: The Food and Drug Administration (FDA or the agency) is announcing the availability of a guidance for industry #187 entitled ''Regulation of Genetically Engineered Animals Containing Heritable recombinant DNA Constructs.'' This guidance is intended to clarify FDA's requirements and recommendations for producers and developers of genetically engineered (GE) animals and their products. The guidance describes how the new animal drug provisions of the Federal Food, Drug, and Cosmetic Act (the act) apply with respect to GE animals, including FDA's intent to exercise enforcement discretion regarding requirements for certain GE animals.

DATES: Submit written or electronic comments on agency guidances at any time.

ADDRESSES: Submit written requests for single copies of the guidance to the Communications Staff (HFV–12), Center for Veterinary Medicine, Food and Drug Administration, 7519 Standish Pl., Rockville, MD 20855. Send one self-addressed adhesive label to assist that office in processing your requests. Submit written comments on the guidance to the Division of Dockets Management (HFA–305), Food and Drug Administration, 5630 Fishers Lane, rm. 1061, Rockville, MD 20852. Submit electronic comments to *http://www.regulations.gov*. See the **SUPPLEMENTARY INFORMATION** section for electronic access to the guidance document.

FOR FURTHER INFORMATION CONTACT: Larisa Rudenko, Center for Veterinary Medicine (HFV–100), Food and Drug Administration, 7500 Standish Pl., Rockville, MD 20855, 240–276–8247, e-mail: *larisa.rudenko@hhs.fda.gov.*

SUPPLEMENTARY INFORMATION:

I. Background

In the **Federal Register** of September 19, 2008 (73 FR 54407), FDA published the notice of availability for a draft guidance entitled ''Regulation of Genetically Engineered Animals Containing Heritable rDNA Constructs'' giving interested persons until November 18, 2008, to comment on the draft guidance. FDA received numerous comments on the draft guidance. FDA reviewed and considered all comments and, in response, made several changes. In response to requests for greater transparency, the agency clarified its intent to hold public advisory committee meetings for GE animal-related approvals and its intent to post statements of intent to exercise enforcement discretion over certain GE animals. In response to other comments, FDA clarified the scope of new animal drug application (NADA) approvals for GE animals and clarified its intent to work with other agencies should it receive a request for investigation or approval of a new animal drug in a GE wildlife animal ultimately intended for release into the wild.

The guidance announced in this notice finalizes the draft guidance dated September 19, 2008.

For the purpose of this guidance, FDA defines ''genetically engineered (GE) animals'' as those animals modified by recombinant DNA (rDNA) techniques, including progeny that contain the modification. The term GE animal can refer to both animals with heritable rDNA constructs and animals with non-heritable rDNA constructs (e.g., those modifications intended to be used as gene therapy). Although much of this guidance will be relevant to non-heritable rDNA constructs, and FDA intends to regulate non-heritable constructs in much the same way as described in this guidance for heritable constructs, this guidance only pertains to GE animals containing heritable rDNA constructs. We may issue a separate guidance on the regulation of GE animals bearing non-heritable constructs to discuss when those constructs would be under FDA jurisdiction and the kinds of information that would be relevant for FDA's review. In this guidance, we will use the term ''GE animal'' to refer to GE animals with heritable rDNA constructs. For ease of reference, we sometimes refer to regulation of the article (the rDNA construct) in such GE animals as regulation of the GE animal.

The Center for Veterinary Medicine (''CVM'', ''we'', ''us'', ''our'') has been working on applications submitted by developers of GE animals under the New Animal Drug provisions of the act (21 U.S.C. 321 *et seq.*). This guidance is intended to clarify these requirements and our recommendations for producers and developers (''sponsors,'' ''you'') of GE animals and their products. CVM will work closely with the other Centers at FDA that regulate pharmaceuticals or other medical products derived from biopharm animals to ensure that our oversight is complementary and not unnecessarily duplicative. Developers of GE animals should contact CVM early in the development of their GE animal; developers whose animals are already well under development also should contact CVM. We intend to issue additional guidance to describe more fully how various components of the New Animal Drug provisions of the act apply to biopharm animals and how CVM will implement them, the division of responsibilities between CVM and the other Centers regarding biopharm animals and products derived from them, and, more generally, how CVM and the other Centers will work interactively to regulate biopharm animals and their products. Developers of GE animals should come to CVM early in the process.

II. Significance of Guidance

This level 1 guidance is being issued consistent with FDA's good guidance practices regulation (21 CFR 10.115). The guidance represents the agency's current thinking on the topic. It does not create or confer any rights for or on any person and does not operate to bind FDA or the public. An alternative approach may be used if such approach satisfies the requirements of the applicable statutes and regulations.

III. Paperwork Reduction Act of 1995

This guidance refers to previously approved collections of information found in FDA regulations. These collections of information are subject to review by the Office of Management and Budget (OMB) under the Paperwork Reduction Act of 1995 (44 U.S.C. 3501–3520). The collections of information have been approved under OMB Control Nos. 0910–0032, 0910–0045, 0910–0117, and 0910–0284.

IV. Comments

Interested persons may submit to the Division of Dockets Management (see **ADDRESSES**) written or electronic comments regarding this document. Submit a single copy of electronic comments or two paper copies of any

mailed comments, except that individuals may submit one paper copy. Comments are to be identified with the docket number found in brackets in the heading of this document. Received comments may be seen in the Division of Dockets Management between 9 a.m. and 4 p.m., Monday through Friday. Submit electronic comments to *http://www.regulations.gov*.

V. Electronic Access

Persons with access to the Internet may obtain the guidance at either *http://www.fda.gov/cvm* or *http://www.regulations.gov*.

Dated: January 9, 2009.

Jeffrey Shuren,

Associate Commissioner for Policy and Planning.

[FR Doc. E9–862 Filed 1–15–09; 8:45 am]

BILLING CODE 4160–01–S

DEPARTMENT OF HEALTH AND HUMAN SERVICES

Food and Drug Administration

[Docket No. FDA–2008–D–0381]

Guidance for Industry on Voluntary Third-Party Certification Programs for Foods and Feeds; Availability

AGENCY: Food and Drug Administration, HHS.

ACTION: Notice.

SUMMARY: The Food and Drug Administration (FDA) is announcing the availability of a guidance for industry entitled ''Voluntary Third-Party Certification Programs for Foods and Feeds.'' This guidance describes the general attributes FDA believes a voluntary third-party certification program should have in order to help ensure its certification is a reliable reflection that the foods and feeds (hereinafter foods) from certified establishments meet applicable FDA requirements, as well as other certification criteria.

DATES: Submit written or electronic comments on agency guidance documents at any time.

ADDRESSES: Submit written requests for single copies of the guidance to the Office of Policy, Office of the Commissioner, Food and Drug Administration, 10903 New Hampshire Ave., Bldg. 1, rm. 4337, Silver Spring, MD 20993–0002. Send one self-addressed adhesive label to assist that office in processing your requests. The guidance can also be obtained by mail by calling 301–796–4840. Submit written comments on the guidance to the Division of Dockets Management (HFA–305), Food and Drug Administration, 5630 Fishers Lane, rm. 1061, Rockville, MD 20852. Submit electronic comments to *http://www.regulations.gov*. See the **SUPPLEMENTARY INFORMATION** section for electronic access to the guidance document.

FOR FURTHER INFORMATION CONTACT: Sharon Lindan Mayl, Food and Drug Administration, 10903 New Hampshire Ave., Bldg. 1, rm. 4337, Silver Spring, MD 20993–0002, 301–796–4840.

SUPPLEMENTARY INFORMATION:

I. Background

FDA is announcing the availability of a guidance for industry entitled ''Voluntary Third-Party Certification Programs for Foods and Feeds.'' This guidance represents FDA's current thinking on the certification process and describes the general attributes FDA believes a voluntary third-party certification program should have in order to provide FDA with confidence in its certification program. If FDA has such confidence, we may choose to recognize the program and provide incentives for establishments to obtain certification by recognized certification programs. Recognition in this context means that FDA has determined that certification may be a reliable reflection that the foods from an establishment certified by that certification body meet applicable FDA requirements, as well as other certification criteria.

This guidance is intended as one of the steps in FDA's future recognition of one or more voluntary third-party certification programs for particular product types. In the future, FDA (we) may issue guidance that addresses third-party certification programs in particular product areas.

This guidance is issued in response to the recommendations contained in the *Action Plan for Import Safety: A Roadmap for Continual Improvement* (Action Plan) issued on November 6, 2007, by the Interagency Working Group on Import Safety (Working Group) established by Executive Order 13439, as well as FDA's Food Protection Plan released on the same date. Both those plans emphasize certification as a way to improve our capacity to verify the safety of products from a growing food establishment inventory, both domestic and foreign.

In the **Federal Register** of April 2, 2008 (73 FR 17989), FDA issued a document requesting comments on the use of third-party certification programs for foods and animal feeds. FDA received approximately 70 comments in response to that document. The comments were generally supportive of the use of third-party certification programs. Many encouraged FDA to recognize such programs as a way to increase participation and improve the safety and security of foods.

On July 10, 2008, we announced the availability of a draft guidance for industry entitled ''Voluntary Third-Party Certification Programs for Foods and Feeds'' (73 FR 39704). In response to the draft guidance, we received 19 comments from a variety of sources, including trade associations, individual companies, standards development organizations, and other domestic and foreign Government agencies. These comments were considered as the guidance was finalized.

Also on July 10, 2008, FDA issued a document announcing a pilot on Voluntary Third-Party Certification Programs for Imported Aquacultured Shrimp (73 FR 39705). We are currently in Phase II of the pilot in which we will conduct onsite audits of selected third-party certification bodies and targeted sampling of imported shrimp products. The goal of the pilot is to gather technical and operational information that will assist FDA in determining its infrastructure needs, as well as the process for evaluating third-party certification programs. Based on our experience with the pilot, we may make additional changes to the guidance being announced in this document.

The guidance makes several changes from the draft guidance. For example, the section on verification that the establishment meets certification criteria no longer includes detailed criteria on specific safety and security systems. Instead, the guidance only recommends that the audit provide the certification body with reasonable assurance that the food or feed is safe and in compliance with certification criteria, which should include FDA requirements. As FDA recognizes third-party certification programs in particular product areas, FDA plans to provide additional guidance on specific certification criteria for those product areas.

In order to help minimize confusion, the guidance uses terminology that is generally consistent with accepted international definitions, such as those used in documents by the International Organization for Standardization (ISO) and the Codex Alimentarius Commission (Codex). There may be some divergence, however, when uses of the terms by these organizations are inconsistent or when use of the internationally accepted terminology

would not make sense in a particular context.

The guidance states that a certification body should immediately notify FDA and the establishment it is certifying if an auditor finds or discovers a situation in which there is a reasonable probability that the food or feed from the audited establishment will cause serious adverse health consequences or death to humans or animals. We believe that such reporting is appropriate. Although the certification body is not a regulatory entity, we believe it would help protect public health for such circumstances to be reported to FDA so that we can investigate the situation. The guidance also notes that an establishment that receives this information may be subject to the requirement imposed by section 1005 of the Food and Drug Administration Amendments Act of 2007 to report certain information to FDA via an electronic portal.

The guidance states that while FDA may provide incentives for participation, neither establishments nor certifying bodies are under an obligation to participate. FDA does not intend to target uncertified establishments or products for inspection or sampling, for example, based solely on their lack of certification.

One comment raised a concern regarding the ability of a foreign Government to serve as a certification body. As in the draft guidance, the guidance states that foreign Governments may be certification bodies. More specifically, the definition of certification body states that it could be a Federal, State, local, or foreign Government agency, as well as a non-Government entity that is independent of the businesses it certifies and free from conflicts of interest.

This guidance is being issued consistent with FDA's good guidance practices regulation (21 CFR 10.115). The guidance represents the agency's current thinking on voluntary third-party certification programs for foods and feeds. It does not create or confer any rights for or on any person and does not operate to bind FDA or the public. An alternative approach may be used if such approach satisfies the requirements of the applicable statutes and regulations.

II. Comments

Interested persons may submit to the Division of Dockets Management (see **ADDRESSES**) written or electronic comments regarding the guidance. Submit a single copy of electronic comments or two paper copies of any mailed comments, except that individuals may submit one paper copy. Comments are to be identified with the docket number found in the brackets in the heading of this document. A copy of the guidance and received comments are available for public examination in the Division of Dockets Management between 9 a.m. and 4 p.m., Monday through Friday.

Please note that on January 15, 2008, the FDA Division of Dockets Management Web site transitioned to the Federal Dockets Management System (FDMS). FDMS is a Government-wide, electronic docket management system. Electronic comments or submissions will be accepted by FDA only through FDMS at*http://www.regulations.gov*.

III. Electronic Access

Persons with access to the Internet may obtain the guidance at either *http://www.fda.gov/oc/guidance/thirdpartycert.html* or *http://www.regulations.gov*.

Dated: January 12, 2009.

Jeffrey Shuren,

Associate Commissioner for Policy and Planning.

[FR Doc. E9–861 Filed 1–15–09; 8:45 am]

BILLING CODE 4160–01–S

DEPARTMENT OF HEALTH AND HUMAN SERVICES

Food and Drug Administration

[Docket No. FDA–2007–D–0371 (formerly Docket No. 2007D–0125)]

Guidance for Industry: Evidence-Based Review System for the Scientific Evaluation of Health Claims

AGENCY: Food and Drug Administration, HHS.

ACTION: Notice.

SUMMARY: The Food and Drug Administration (FDA) is announcing the availability of a guidance document entitled ''Guidance for Industry: Evidence-Based Review System for the Scientific Evaluation of Health Claims.'' This guidance outlines the agency's approach to the review of the scientific evidence for health claims that meet the significant scientific agreement standard (SSA) and qualified health claims. Elsewhere in this issue of the **Federal Register**, FDA is announcing the withdrawal of the guidance documents entitled ''Guidance for Industry and FDA: Interim Evidence-Based Ranking System for Scientific Data'' and ''Guidance for Industry: Significant Scientific Agreement in the Review of Health Claims for Conventional Foods and Dietary Supplements.''

DATES: Submit written or electronic comments on agency guidances at any time.

ADDRESSES: Submit written requests for single copies of the guidance to the Office of Nutrition, Labeling, and Dietary Supplements, Center for Food Safety and Applied Nutrition, (HFS–830), Food and Drug Administration, 5100 Paint Branch Pkwy., College Park, MD 20740. Send two self-addressed adhesive labels to assist that office in processing your requests.

Submit written comments on the guidance to the Division of Dockets Management (HFA–305), Food and Drug Administration, 5630 Fishers Lane, rm. 1061, Rockville, MD 20852. Submit electronic comments on the guidance to *http://www.regulations.gov*. See the **SUPPLEMENTARY INFORMATION** section for electronic access to the guidance.

FOR FURTHER INFORMATION CONTACT: Paula R. Trumbo, Center for Food Safety and Applied Nutrition (HFS–830), Food and Drug Administration, 5100 Paint Branch Pkwy., College Park, MD 20740, 301–436–1191.

SUPPLEMENTARY INFORMATION:

I. Background

In the **Federal Register** of July 9, 2007 (72 FR 37246), FDA announced the availability of a draft guidance entitled ''Guidance for Industry: Evidence-Based Review System for the Scientific Evaluation of Health Claims.'' The agency considered received comments as it finalized this guidance. The primary purpose of this guidance is to provide a description of the scientific evaluation process that FDA uses in determining the strength of the relationship of a substance to decreasing the risk of a disease or health-related condition.

FDA is issuing this guidance document as a level 1 guidance consistent with FDA's good guidance practices regulation (21 CFR 10.115). This guidance represents the agency's current thinking on the evaluation of scientific evidence for health claims. It does not create or confer any rights for or on any person and does not operate to bind FDA or the public. An alternate approach may be used if such approach satisfies the requirements of the applicable statutes and regulations.

II. Paperwork Reduction Act of 1995

This guidance refers to previously approved collections of information found in FDA regulations. These collections of information are subject to review by the Office of Management and

Budget (OMB) under the Paperwork Reduction Act of 1995 (44 U.S.C. 3501–3520). The collections of information in 21 CFR 101.14 and 101.70 have been approved under OMB control no. 0910–0381.

III. Comments

Interested persons may submit to the Division of Dockets Management (see **ADDRESSES**) written or electronic comments regarding this document. Submit a single copy of electronic comments or two paper copies of any mailed comments, except that individuals may submit one paper copy. Comments are to be identified with the docket number found in brackets in the heading of this document. Received comments may be seen in the Division of Dockets Management between 9 a.m. and 4 p.m., Monday through Friday.

IV. Electronic Access

Persons with access to the Internet may obtain the guidance at *http://www.cfsan.fda.gov/guidance.html*.

V. References

The following references have been placed on display in the Division of Dockets Management (see **ADDRESSES**) and may be seen by interested persons between 9 a.m. and 4 p.m., Monday through Friday. (FDA has verified the Web site address, but FDA is not responsible for any subsequent changes to this Web site after this document publishes in the **Federal Register**.)

1. American Cancer Society, Cancer Facts and Figures, 2004.
2. The Alpha-Tocopherol, Beta Carotene Cancer Prevention Study Group, ''The Effect of Vitamin E and Beta Carotene on the Incidence of Lung Cancer and Other Cancers in Male Smokers, *New England Journal of Medicine*, 330:1029–1035, 1994.
3. Barton S., ''Which Clinical Studies Provide the Best Evidence? The Best RCT Still Trumps the Best Observational Study,'' *British Medical Journal*, 321:255–256, 2000.
4. Cade, J., R. Thompson, V. Burley, et al., ''Development, Validation and Utilization of Food-Frequency Questionnaires—A Review, *Public Health Nutrition*, 5:567–587, 2002.
5. Federal Judicial Center, *Reference Manual on Scientific Evidence*, 2d ed., 2000.
6. Flegal K.M., ''Evaluating Epidemiological Evidence of the Effects of Food and Nutrient Exposures,'' *American Journal of Clinical Nutrition*, 69:1339S–1344S, 1999.
7. Greer N., G. Mosser, G. Logan, et al., ''A Practical Approach to Evidence Grading,'' *Joint Commission Journal on Quality Improvements*, 26:700–712, 2000.
8. Hill A.B., ''The Environment and Disease: Association or Causation?,'' *Proceedings of the Royal Society of Medicine*, 58:295–300, 1965.
9. Hord N.G. and J.I. Fenton, ''Context is Everything: Mining the Normal and Preneoplastic Microenvironment for Insights Into the Diet and Cancer Risk Conundrum,'' *Molecular Nutrition and Food Research*, 51:100–106, 2007.
10. IOM, Institute of Medicine, ''Dietary Supplements: A Framework for Evaluating Safety,'' National Academies Press, Washington, DC, 2005.
11. Kraemer H.C., K.K. Lowe, D.J. Kupfer, *To Your Health: How to Understand What Research Tell Us About Risk*, Oxford University Press, 2005.
12. Kris-Etherton, P.M. and J. Dietschy, ''Design Criteria for Studies Examining Individual Fatty Acid Effects on Cardiovascular Disease Risk Factors: Human and Animal Studies,'' *American Journal of Clinical Nutrition*, 1590S–1596S, 1997.
13. Lichtenstein, A.H. and R.M. Russell, ''Essential Nutrients: Food or Supplements?'' *Journal of American Medical Association*, 294:351–358, 2005.
14. Milner J.A., ''Diet and Cancer: Facts and Controversies,'' *Nutrition and Cancer*, 56: 216–224, 2006.
15. National Cancer Institute, Dictionary of Cancer Terms, *http://www.cancer.gov/dictionary*.
16. National Research Council, ''Diet and Health: Implications for Reducing Chronic Disease Risk,'' National Academy Press, Washington, DC, 1989.
17. Omenn, G.S., G.E. Goodman, M.D. Thornquist, et al., ''Effects of a Combination of Beta Carotene and Vitamin A on Lung Cancer and Cardiovascular Disease,'' *New England Journal of Medicine*, 334:1150–1155, 1996.
18. Peto, R., R. Doll, J.D. Buckley, et al., ''Can Dietary Beta-Carotene Materially Reduce Human Cancer Rates?,'' *Nature*, 290:201–208, 1981.
19. Sempos C.T., K. Liu, N.D. Earnst, ''Food and Nutrient Exposures: What to Consider When Evaluating Epidemiologic Data,'' *American Journal of Clinical Nutrition*, 69:1330S–1338S, 1999.
20. Torun B., ''Protein-Energy Malnutrition,'' *In: Modern Nutrition in Health and Disease*, Williams and Williams, New York, 2006.
21. Spilker, B., *Guide to Clinical Studies*, Raven Press, New York, 1991.
22. Subar, A., et al., ''Comparative Validation of the Block, Willett, and National Cancer Institute Food Frequency Questionnaires,'' *American Journal of Epidemiology*, 154:1089–1099, 2001.
23. Szklo M. and F.J. Nieto, *Epidemiology Beyond the Basics*, Aspen Publishing, 2000.
24. Willett, W.C., ''Overview of Nutritional Epidemiology,'' *Nutritional Epidemiology*, Oxford University Press, Oxford, 1990.
25. Willett, W.C., ''Issues in Analysis and Presentation of Dietary Data,'' *In Nutritional Epidemiology*, 2d ed., Oxford University Press, Oxford, 1998.
26. Wilson, E.B., ''An Introduction to Scientific Research,'' General Publishing Co., Toronto, 1990.

Dated: January 13, 2009.

Jeffrey Shuren,

Associate Commissioner for Policy and Planning.

[FR Doc. E9–957 Filed 1–15–09; 8:45 am]

BILLING CODE 4160–01–S

DEPARTMENT OF HEALTH AND HUMAN SERVICES

Food and Drug Administration

[Docket No. FDA–1999–D–0170] (formerly Docket No. 1999D–5424)

Guidance for Industry: Significant Scientific Agreement in the Review of Health Claims for Conventional Foods and Dietary Supplements; Withdrawal of Guidance

AGENCY: Food and Drug Administration, HHS.

ACTION: Notice; withdrawal.

SUMMARY: The Food and Drug Administration (FDA) is announcing the withdrawal of a guidance entitled ''Guidance for Industry: Significant Scientific Agreement in the Review of Health Claims for Conventional Foods and Dietary Supplements,'' that was issued December 1999.

DATES: The withdrawal is effective January 16, 2009.

FOR FURTHER INFORMATION CONTACT: Paula R. Trumbo, Center for Food Safety and Applied Nutrition (HFS–830), Food and Drug Administration, 5100 Paint Branch Pkwy., College Park, MD, 20740, 301–436–2579.

SUPPLEMENTARY INFORMATION: In a notice published in the **Federal Register** of December 22, 1999 (64 FR 71794), FDA announced the availability of a guidance entitled ''Guidance for Industry: Significant Scientific Agreement in the Review of Health Claims for Conventional Foods and Dietary Supplements.'' This guidance is being withdrawn because it is obsolete.

Dated: January 13, 2009.

Jeffrey Shuren,

Associate Commissioner for Policy and Planning.

[FR Doc. E9–964 Filed 1–15–09; 8:45 am]

BILLING CODE 4160–01–S

DEPARTMENT OF HEALTH AND HUMAN SERVICES

Food and Drug Administration

[Docket No. FDA–2003–N–0103] (formerly Docket No. 2003N–0069)

Release of Task Force Report; Guidance for Industry and FDA: Interim Evidence-Based Ranking System for Scientific Data; Withdrawal of Guidance

AGENCY: Food and Drug Administration, HHS.

ACTION: Notice; withdrawal.

SUMMARY: The Food and Drug Administration (FDA) is announcing the withdrawal of the guidance entitled ''Guidance for Industry and FDA: Interim Evidence-Based Ranking System for Scientific Data'' that was issued on July 10, 2003.

DATES: The withdrawal is effective January 16, 2009.

FOR FURTHER INFORMATION CONTACT: Paula R. Trumbo, Center for Food Safety and Applied Nutrition (HFS–830), Food and Drug Administration, 5100 Paint Branch Pkwy., College Park, MD, 20740, 301–436–2579.

SUPPLEMENTARY INFORMATION: In a notice published in the **Federal Register** of July 11, 2003 (68 FR 41387), FDA announced the availability of a guidance entitled ''Guidance for Industry and FDA: Interim Evidence-Based Ranking System for Scientific Data.'' This guidance is being withdrawn because it is obsolete.

Dated: January 13, 2009.

Jeffrey Shuren,

Associate Commissioner for Policy and Planning.

[FR Doc. E9–959 Filed 1–15–09; 8:45 am]

BILLING CODE 4160–01–S

DEPARTMENT OF HEALTH AND HUMAN SERVICES

Health Resources and Services Administration

Agency Information Collection Activities: Proposed Collection: Comment Request

In compliance with the requirement for opportunity for public comment on proposed data collection projects (section 3506(c)(2)(A) of Title 44, United States Code, as amended by the Paperwork Reduction Act of 1995, Public Law 104–13), the Health Resources and Services Administration (HRSA) publishes periodic summaries of proposed projects being developed for submission to OMB under the Paperwork Reduction Act of 1995. To request more information on the proposed project or to obtain a copy of the data collection plans and draft instruments, e-mail *paperwork@hrsa.gov* or call the HRSA Reports Clearance Officer on (301) 443–1129.

Comments are invited on: (a) The proposed collection of information for the proper performance of the functions of the agency; (b) the accuracy of the agency's estimate of the burden of the proposed collection of information; (c) ways to enhance the quality, utility, and clarity of the information to be collected; and (d) ways to minimize the burden of the collection of information on respondents, including through the use of automated collection techniques or other forms of information technology.

Proposed Project: Uncompensated Services Assurance Report (OMB No. 0915–0077)—Extension

Under the Hill-Burton Act, the Government provides grants and loans for construction or renovation of health care facilities. As a condition of receiving this construction assistance, facilities are required to provide services to persons unable to pay. A condition of receiving this assistance requires facilities to provide assurances periodically that the required level of uncompensated care is being provided, and that certain notification and recordkeeping procedures are being followed. These requirements are referred to as the uncompensated services assurance.

ESTIMATE OF INFORMATION COLLECTION BURDEN

Type of requirement and regulatory citation	No. of respondents	Responses per respondent	Total responses	Hours per response	Total hour burden
Disclosure burden (42 CFR)					
Published Notices (124.504(c))	86	1	86	0.75	65
Individual Notices (124.504(c))	86	1	86	43.6	3,750
Determinations of Eligibility (124.507)	86	86	7,396	0.75	5,547
Subtotal Disclosure Burden					9,362
Reporting					
Uncompensated Services Report—HRSA–710 Form (124.509(a))	10	1	10	11.0	110
Application for Compliance Alternatives:					
Public Facilities (124.513)	4	1	4	6.0	24
Small Obligation Facilities (124.514(c))	0				
Charitable Facilities (124.516(c))	2	1	2	6.0	12
Annual Certification for Compliance Alternatives:					
Public Facilities (124.509(b))	37	1	37	0.5	18.5
Charitable Facilities (124.509(b))	4	1	14	0.5	7
Small Obligation Facilities (124.509(c))	0	1	0	0.5	0
Complaint Information (124.511(a)):					
Individuals	10	1	10	0.25	3
Facilities	10	1	10	0.5	5
Subtotal Reporting Burden					179.5

Recordkeeping	Number of recordkeepers	Hours per year	Total hour burden
Non-alternative Facilities (124.510(a))	86	50	4,300
Subtotal Recordkeeping Burden			4,300

The total burden for this project is estimated to be 13,841.5 hours. E-mail comments to *paperwork@hrsa.gov* or mail the HRSA Reports Clearance Officer, Room 10–33, Parklawn Building, 5600 Fishers Lane, Rockville, MD 20857. Written comments should be received within 60 days of this notice.

Dated: January 7, 2009.

Alexandra Huttinger,

Director, Division of Policy Review and Coordination.

[FR Doc. E9–825 Filed 1–15–09; 8:45 am]

BILLING CODE 4165–15–P

DEPARTMENT OF HEALTH AND HUMAN SERVICES

National Institutes of Health

Center for Scientific Review; Notice of Closed Meetings

Pursuant to section 10(d) of the Federal Advisory Committee Act, as amended (5 U.S.C. Appendix 2), notice is hereby given of the following meetings.

The meetings will be closed to the public in accordance with the provisions set forth in sections 552b(c)(4) and 552b(c)(6), Title 5 U.S.C., as amended. The grant applications and the discussions could disclose confidential trade secrets or commercial property such as patentable material, and personal information concerning individuals associated with the grant applications, the disclosure of which would constitute a clearly unwarranted invasion of personal privacy.

Name of Committee: Center for Scientific Review Special Emphasis Panel; Trafficking and Signaling.

Date: January 26, 2009.

Time: 1:30 *p.m.* to 2:30 *p.m.*

Agenda: To review and evaluate grant applications,

Place: National Institutes of Health, 6701 Rockledge Drive Bethesda, MD 20892 (Telephone Conference Call).

Contact Person: Deborah L. Lewis, PhD, Scientific Review Officer, Center for Scientific Review, National Institutes of Health, 6701 Rockledge Drive, Room 4118, MSC 7850, Bethesda, MD 20892, 301–435–1224, *lewisdeb@csr.nih.gov*.

This notice is being published less than 15 days prior to the meeting due to the timing limitations imposed by the review and funding cycle.

Name of Committee: Center for Scientific Review Special Emphasis Panel; Member Conflicts: Brain Imaging and Behavioral Treatments.

Date: January 27, 2009.

Time: 7 *a.m.* to 9 *p.m.*

Agenda: To review and evaluate grant applications.

Place: National Institutes of Health, 6701 Rockledge Drive, Bethesda, MD 20892 (Virtual Meeting).

Contact Person: Weijia Ni, PhD, Scientific Review Officer, Center for Scientific Review, National Institutes of Health, 6701 Rockledge Drive, Room 3190, MSC 7848 (for overnight mail use room # and 20817 zip) Bethesda, MD 20892, (301) 435–1507, *niw@csr.nih.gov*.

This notice is being published less than 15 days prior to the meeting due to the timing limitations imposed by the review and funding cycle.

Name of Committee: Center for Scientific Review Special Emphasis Panel; Small Business and Innovative Ultrasound Imaging.

Date: January 30, 2009.

Time: 4 *p.m.* to 10 *p.m.*

Agenda: To review and evaluate grant applications.

Place: Doubletree Guest Suites Hotel at Doheny Beach, 34402 Pacific Coast Highway, Dana Point, CA 92629.

Contact Person: Xiang-Ning Li, MD, PhD, Scientific Review Officer, Center for Scientific Review, National Institutes of Health, 6701 Rockledge Drive, Room 5112, MSC 7854, Bethesda, MD 20892, 301–435–1744, *lixiang@csr.nih.gov*.

This notice is being published less than 15 days prior to the meeting due to the timing limitations imposed by the review and funding cycle.

Name of Committee: Surgical Sciences, Biomedical Imaging and Bioengineering Integrated Review Group; Medical Imaging Study Section.

Date: February 1–2, 2009.

Time: 4 *p.m.* to 3 *p.m.*

Agenda: To review and evaluate grant applications.

Place: Doubletree Guest Suites Hotel at Doheny Beach, 34402 Pacific Coast Highway, Dana Point, CA 92629.

Contact Person: Xiang-Ning Li, MD, PhD, Scientific Review Officer, Center for Scientific Review, National Institutes of Health, 6701 Rockledge Drive, Room 5112, MSC 7854, Bethesda, MD 20892, 301–435–1744, *lixiang@csr.nih.gov*.

Name of Committee: Center for Scientific Review, Special Emphasis Panel, Clinical Molecular Imaging.

Date: February 2–3, 2009.

Time: 7 *p.m.* to 5 *p.m.*

Agenda: To review and evaluate grant applications.

Place: Doubletree Guest Suites Hotel at Doheny Beach, 34402 Pacific Coast Highway, Dana Point, CA 92629.

Contact Person: Eileen W. Bradley, DSC, Scientific Review Officer, Center for Scientific Review, National Institutes of Health, 6701 Rockledge Drive, Room 5100, MSC 7854, Bethesda, MD 20892, (301) 435–1179, *bradleye@csrnih.gov*.

Name of Committee: Biology of Development and Aging Integrated Review; Group Cellular Mechanisms in Aging and Development Study Section

Date: February 3–4, 2009.

Time: 8 *a.m.* to 5 *p.m.*

Agenda: To review and evaluate grant applications.

Place: Hyatt Regency Bethesda, One Bethesda Metro Center, 7400 Wisconsin Avenue, Bethesda, MD 20814.

Contact Person: Sherry L. Dupere, PhD, Scientific Review Administrator, Center for Scientific Review, National Institutes of Health, 6701 Rockledge Drive, Room 5136, MSC 7840, Bethesda, MD 20892, (301) 435–1021, *duperes@csr.nih.gov.*

Name of Committee: Health of the Population Integrated Review Group; Infectious Diseases, Reproductive Health, Asthma and Pulmonary Conditions Study Section.

Date: February 5–6, 2009.

Time: 8 *a.m.* to 5 *p.m.*

Agenda: To review and evaluate grant applications.

Place: Bahia Resort Hotel, 998 West Mission Bay Drive, San Diego, CA 92109.

Contact Person: Sandra Melnick Seitz, DRPH, Scientific Review Officer, Center for Scientific Review, National Institutes of Health, 6701 Rockledge Drive, Room 3156, MSC 7770, Bethesda, MD 20892, 301–435–1251, *melnicks@csr.nih.gov.*

Name of Committee: Endocrinology, Metabolism, Nutrition and Reproductive Sciences Integrated Review Group; Cellular Aspects of Diabetes and Obesity Study Section.

Date: February 5–6, 2009.

Time: 8 *a.m.* to 5 *p.m.*

Agenda: To review and evaluate grant applications.

Place: Hyatt Regency Bethesda, One Bethesda Metro Center, 7400 Wisconsin Avenue, Bethesda, MD 20814.

Contact Person: Ann A. Jerkins, PhD; Scientific Review Officer, Center for Scientific Review, National Institutes of Health, 6701 Rockledge Drive, Room 6154, MSC 7892, Bethesda, MD 20892, 301–435–4514, *jerkinsa@csr.nih.gov.*

Name of Committee: Bioengineering Sciences & Technologies Integrated Review Group; Microscopic Imaging Study Section.

Date: February 5, 2009.

Time: 8 *a.m.* to 7 *p.m.*

Agenda: To review and evaluate grant applications.

Place: Holiday Inn San Francisco Fisherman's Wharf, 1300 Columbus Avenue, San Francisco, CA 94133 (Virtual Meeting).

Contact Person: George W. Chacko, PhD, Scientific Review Officer, Center for Scientific Review, National Institutes of Health, 6701 Rockledge Drive, Room 5170, MSC 7849, Bethesda, MD 20892, 301–435–1245, *chackoge@csr.nih.gov.*

Name of Committee: Biobehavioral and Behavioral Processes Integrated Review Group; Cognition and Perception Study Section.

Date: February 5–6, 2009.

Time: 8:30 *a.m.* to 5 *p.m.*

Agenda: To review and evaluate grant applications.

Place: Serrano Hotel, 405 Taylor Street, San Francisco, CA 94102.

Contact Person: Cheri Wiggs, PhD, Scientific Review Officer, Center for Scientific Review, National Institutes of Health, 6701 Rockledge Drive, Room 3180, MSC 7848, Bethesda, MD 20892, (301) 435–1261, *wiggsc@csr.nih.gov.*

Name of Committee: Musculoskeletal, Oral and Skin Sciences Integrated Review Group; Skeletal Biology Development and Disease Study Section.
Date: February 8–10, 2009.
Time: 7 *p.m.* to 4 *p.m.*
Agenda: To review and evaluate grant applications.
Place: Sheraton Delfina, 530 West Pico Blvd, Espada, Santa Monica, CA 90405.
Contact Person: Priscilla B. Chen, PhD, Scientific Review Officer, Center for Scientific Review, National Institutes of Health, 6701 Rockledge Drive, Room 4104, MSC 7814, Bethesda, MD 20892, (301) 435–1787, *chenp@csr.nih.gov.*

Name of Committee: Digestive Sciences Integrated Review Group; Gastrointestinal Mucosal Pathobiology Study Section.
Date: February 9, 2009.
Time: 8 *a.m.* to 6 *p.m.*
Agenda: To review and evaluate grant applications.
Place: Residence Inn Bethesda, 7335 Wisconsin Avenue, Bethesda, MD 20814.
Contact Person: Peter J. Perrin, PhD, Scientific Review Officer, Center for Scientific Review, National Institutes of Health, 6701 Rockledge Drive, Room 2180, MSC 7818, Bethesda, MD 20892, (301) 435–0682, *perrinp@csr.nih.gov.*

Name of Committee: Cardiovascular Sciences Integrated Review Group; Hypertension and Microcirculation Study Section.
Date: February 9–10, 2009.
Time: 8 *a.m.* to 6 *p.m.*
Agenda: To review and evaluate grant applications.
Place: The Westin St. Francis, 335 Powell Street, San Francisco, CA 94102.
Contact Person: Ai-Ping Zou, MD, PhD, Scientific Review Officer, Center for Scientific Review, National Institutes of Health, 6701 Rockledge Drive, Room 4118, MSC 7814, Bethesda, MD 20892, 301–435–1777, *zouai@csr.nih.gov.*

Name of Committee: Cardiovascular Sciences Integrated Review Group; Vascular Cell and Molecular Biology Study Section.
Date: February 9–10, 2009.
Time: 8 *a.m.* to 3 *p.m.*
Agenda: To review and evaluate grant applications.
Place: Hilton Washington/Rockville, 1750 Rockville Pike, Rockville, MD 20852.
Contact Person: Anshumali Chaudhari, PhD, Scientific Review Officer, Center for Scientific Review, National Institutes of Health, 6701 Rockledge Drive, Room 4124, MSC 7802, Bethesda, MD 20892, (301) 435–1210, *chaudhaa@csr.nih.gov.*

Name of Committee: Oncological Sciences Integrated Review Group, Tumor Cell Biology Study Section.
Date: February 9–10, 2009.
Time: 8 *a.m.* to 5 *p.m.*
Agenda: To review and evaluate grant applications.
Place: Embassy Suites at the Chevy Chase Pavilion, 4300 Military Road, NW., Washington, DC 20015.
Contact Person: Angela Y. Ng, PhD, MBA, Scientific Review Officer, Center for Scientific Review National Institutes of Health, 6701 Rockledge Drive, Room 6200, MSC 7804 (For courier delivery, use MD 20817), Bethesda, MD 20892, 301–435–1715, *nga@csr.nih.gov.*

Name of Committee: Oncological Sciences Integrated Review Group; Cancer Genetics Study Section.
Date: February 9–10, 2009.
Time: 8 *a.m.* to 5 *p.m.*
Agenda: To review and evaluate grant applications.
Place: Hilton Washington/Rockville, 1750 Rockville Pike, Rockville, MD 20852.
Contact Person: Zhiqiang Zou, PhD, MD, Scientific Review Officer, Center for Scientific Review, National Institutes of Health, 6701 Rockledge Drive, Room 6190, MSC 7804, Bethesda, MD 20892, 301–451–0132, *zouzhiq@csr.nih.gov.*

Name of Committee: Oncological Sciences Integrated Review Group; Cancer Etiology Study Section.
Date: February 9–10, 2009.
Time: 8 *a.m.* to 5 *p.m.*
Agenda: To review and evaluate grant applications.
Place: Doubletree Hotel, 8120 Wisconsin Avenue, Bethesda, MD 20814.
Contact Person: Nywana Sizemore, PhD, Scientific Review Officer, Center for Scientific Review, National Institutes of Health, 6701 Rockledge Drive, Room 6204, MSC 7804, Bethesda, MD 20892, 301–435–1718, *sizemoren@csr.nih.gov.*

Name of Committee: Digestive Sciences Integrated Review Group; Cellular and Molecular Biology of the Kidney Study Section.
Date: February 9, 2009.
Time: 8 *a.m.* to 5 *p.m.*
Agenda: To review and evaluate grant applications.
Place: Hilton Hotel Los Angeles Airport, 5711 West Century Boulevard, Los Angeles, CA 90045.
Contact Person: Shirley Hilden, PhD, Scientific Review Officer, Center for Scientific Review, National Institutes of Health, 6701 Rockledge Drive, Room 4218, MSC 7814, Bethesda, MD 20892, (301) 435–1198, *hildens@csr.nih.gov.*

Name of Committee: Endocrinology, Metabolism, Nutrition and Reproductive Sciences Integrated Review Group; Integrative Nutrition and Metabolic Processes Study Section.
Date: February 9, 2009.
Time: 8 *a.m.* to 6 *p.m.*
Agenda: To review and evaluate grant applications.
Place: Embassy Suites at the Chevy Chase Pavilion, 4300 Military Road, NW., Washington, DC 20015.
Contact Person: Sooja K. Kim, PhD, Scientific Review Officer, Center for Scientific Review, National Institutes of Health, 6701 Rockledge Drive, Room 6182, MSC 7892, Bethesda, MD 20892, (301) 435–1780, *kims@csr.nih.gov.*

Name of Committee: Biobehavioral and Behavioral Processes Integrated Review Group; Child Psychopathology and Developmental Disabilities Study Section.
Date: February 9–10, 2009.
Time: 8 *a.m.* to 3 *p.m.*
Agenda: To review and evaluate grant applications.
Place: Serrano Hotel, 405 Taylor Street, San Francisco, CA 94102.
Contact Person: Jane A. Doussard-Roosevelt, PhD, Scientific Review Officer, Center for Scientific Review, National Institutes of Health, 6701 Rockledge Drive, Room 3184, MSC 7848, Bethesda, MD 20892, (301) 435–4445, *doussarj@csr.nih.gov.*

Name of Committee: Surgical Sciences, Biomedical Imaging and Bioengineering Integrated Review Group; Bioengineering, Technology and Surgical Sciences Study Section.
Date: February 9–10, 2009.
Time: 8 *a.m.* to 5 *p.m.*
Agenda: To review and evaluate grant applications.
Place: Hyatt Regency Bethesda, One Bethesda Metro Center, 7400 Wisconsin Avenue, Bethesda, MD 20814.
Contact Person: Khalid Masood, PhD, Scientific Review Officer, Center for Scientific Review, National Institutes of Health, 6701 Rockledge Drive, Room 5120, MSC 7854, Bethesda, MD 20892, 301–435–2392, *masoodk@csr.nih.gov.*

Name of Committee: Cell Biology Integrated Review Group; Biology and Diseases of the Posterior Eye Study Section.
Date: February 9–10, 2009.
Time: 8:30 a.m. to 5:30 p.m.
Agenda: To review and evaluate grant applications.
Place: Sir Francis Drake Hotel, 450 Powell Street, San Francisco, CA 94102.
Contact Person: Michael H. Chaitin, PhD, Scientific Review Officer, Center for Scientific Review, National Institutes of Health, 6701 Rockledge Drive, Room 5202, MSC 7850, Bethesda, MD 20892, (301) 435–0910, *chaitinm@csr.nih.gov.*

Name of Committee: Center for Scientific Review Special Emphasis Panel; Topics in Bacteriology.
Date: February 9–10, 2009.
Time: 8:30 a.m. to 5 p.m.
Agenda: To review and evaluate grant applications.
Place: National Institutes of Health, 6701 Rockledge Drive, Bethesda, MD 20892 (Virtual Meeting).
Contact Person: Liangbiao Zheng, PhD, Scientific Review Officer, Center for Scientific Review, National Institutes of Health, 6701 Rockledge Drive, Room 3214, MSC 7808, Bethesda, MD 20892, 301–402–5671, *zhengli@csr.nih.gov.*

Name of Committee: Infectious Diseases and Microbiology Integrated Review Group; Virology—A Study Section.
Date: February 9–10, 2009.
Time: 8:30 a.m. to 5 p.m.
Agenda: To review and evaluate grant applications.
Place: Hilton Alexandria Old Town, 1767 King Street, Alexandria, VA 22314.
Contact Person: Joanna M. Pyper, PhD, Scientific Review Officer, Center for Scientific Review, National Institutes of Health, 6701 Rockledge Drive, Room 3198, MSC 7808 Bethesda, MD 20892, (301) 435–1151, *pyperj@csr.nih.gov.*

(Catalogue of Federal Domestic Assistance Program Nos. 93.306, Comparative Medicine;

93.333, Clinical Research, 93.306, 93.333, 93.337, 93.393–93.396, 93.837–93.84, 93.846–93.878, 93.892, 93.893, National Institutes of Health, HHS)

Dated: January 5, 2009.

Jennifer Spaeth,

Director, Office of Federal Advisory Committee Policy.

[FR Doc. E9–283 Filed 1–15–09; 8:45 am]

BILLING CODE 4140–01–M

DEPARTMENT OF HEALTH AND HUMAN SERVICES

National Institutes of Health

Center for Scientific Review; Notice of Closed Meetings

Pursuant to section 10(d) of the Federal Advisory Committee Act, as amended (5 U.S.C. Appendix 2), notice is hereby given of the following meetings.

The meetings will be closed to the public in accordance with the provisions set forth in sections 552b(c)(4) and 552b(c)(6), Title 5 U.S.C., as amended. The grant applications and the discussions could disclose confidential trade secrets or commercial property such as patentable material, and personal information concerning individuals associated with the grant applications, the disclosure of which would constitute a clearly unwarranted invasion of personal privacy.

Name of Committee: Center for Scientific Review Special Emphasis Panel; Member Conflicts: Prevention and Behavioral Intervention.

Date: January 15, 2009.

Time: 3 p.m. to 5 p.m.

Agenda: To review and evaluate grant applications.

Place: National Institutes of Health, 6701 Rockledge Drive, Bethesda, MD 20892 (Telephone Conference Call).

Contact Person: Karen Lechter, PhD, Scientific Review Officer, Center for Scientific Review, National Institutes of Health, 6701 Rockledge Drive, Room 3128, MSC 7759, Bethesda, MD 20892, 301–496–0726, *lechterk@csr.nih.gov*.

This notice is being published less than 15 days prior to the meeting due to the timing limitations imposed by the review and funding cycle.

Name of Committee: Endocrinology, Metabolism, Nutrition and Reproductive Sciences Integrated Review Group, Integrative and Clinical Endocrinology and Reproduction Study Section.

Date: January 26, 2009.

Time: 8 a.m. to 6 p.m.

Agenda: To review and evaluate grant applications.

Place: Hyatt Regency Bethesda, One Bethesda Metro Center, 7400 Wisconsin Avenue, Bethesda, MD 20814.

Contact Person: Michael Knecht, PhD, Scientific Review Officer, Center for Scientific Review, National Institutes of Health, 6701 Rockledge Drive, Room 6176, MSC 7892, Bethesda, MD 20892, (301) 435–1046, *knechtm@csr.nih.gov*.

This notice is being published less than 15 days prior to the meeting due to the timing limitations imposed by the review and funding cycle.

Name of Committee: Center for Scientific Review Special Emphasis Panel; Calcium Flux and Arrhythmias.

Date: January 28, 2009.

Time: 2 p.m. to 4 p.m.

Agenda: To review and evaluate grant applications.

Place: National Institutes of Health, 6701 Rockledge Drive, Bethesda, MD 20892 (Telephone Conference Call).

Contact Person: Olga A. Tjurmina, PhD, Scientific Review Officer, Center for Scientific Review, National Institutes of Health, 6701 Rockledge Drive, Room 4030B, MSC 7814, Bethesda, MD 20892, (301) 451–1375, *ot3d@nih.gov*.

This notice is being published less than 15 days prior to the meeting due to the timing limitations imposed by the review and funding cycle.

Name of Committee: Immunology Integrated Review Group; Cellular and Molecular Immunology—A Study Section.

Date: January 29–30, 2009.

Time: 8:30 a.m. to 2 p.m.

Agenda: To review and evaluate grant applications.

Place: The Westin St. Francis Hotel, 335 Powell Street, San Francisco, CA 94102.

Contact Person: Samuel C. Edwards, PhD, Scientific Review Officer, Center for Scientific Review, National Institutes of Health, 6701 Rockledge Drive, Room 4200, MSC 7812, Bethesda, MD 20892, (301) 435–1152, *edwardss@csr.nih.gov*.

Name of Committee: Center for Scientific Review Special Emphasis Panel; Obesity, Exercise, and Pulmonary Rehabilitation.

Date: February 2, 2009.

Time: 12 p.m. to 1 p.m.

Agenda: To review and evaluate grant applications.

Place: Mayflower Park Hotel, 405 Olive Way, Seattle, WA 98101.

Contact Person: Michael Micklin, PhD, Scientific Review Officer, Center for Scientific Review, National Institutes of Health, 6701 Rockledge Drive, Room 3136, MSC 7759, Bethesda, MD 20892, (301) 435–1258, *micklinm@csr.nih.gov*.

Name of Committee: Endocrinology, Metabolism, Nutrition and Reproductive Sciences Integrated Review Group, Integrative Physiology of Obesity and Diabetes Study Section.

Date: February 5–6, 2009.

Time: 8 a.m. to 4 p.m.

Agenda: To review and evaluate grant applications.

Place: Hyatt Regency Bethesda, One Bethesda Metro Center, 7400 Wisconsin Avenue, Bethesda, MD 20814.

Contact Person: Reed A. Graves, PhD, Scientific Review Officer, Center for Scientific Review, National Institutes of Health, 6701 Rockledge Drive, Room 6166, MSC 7892, Bethesda, MD 20892, (301) 402–6297, *gravesr@csr.nih.gov*.

Name of Committee: Center for Scientific Review Special Emphasis Panel; Pathophysiological Basis of Mental Disorders and Addictions.

Date: February 5, 2009.

Time: 8 a.m. to 8 p.m.

Agenda: To review and evaluate grant applications.

Place: InterContinental Mark Hopkins San Francisco Hotel, One Nob Hill, San Francisco, CA 94108.

Contact Person: Boris P. Sokolov, PhD, Scientific Review Officer, Center for Scientific Review, National Institutes of Health, 6701 Rockledge Drive, Room 5217A, MSC 7846, Bethesda, MD 20892, 301–435–1197, *bsokolov@csr.nih.gov*.

Name of Committee: Center for Scientific Review Special Emphasis Panel; Brain Injury and Cell Death.

Date: February 5–6, 2009.

Time: 9 a.m. to 11:30 a.m.

Agenda: To review and evaluate grant applications.

Place: InterContinental Mark Hopkins San Francisco Hotel, One Nob Hill, San Francisco, CA 94108.

Contact Person: Boris P. Sokolov, PhD, Scientific Review Officer, Center for Scientific Review, National Institutes of Health, 6701 Rockledge Drive, Room 521 7A, MSC 7846, Bethesda, MD 20892, 301–435–1197, *bsokolov@csr.nih.gov*.

Name of Committee: Center for Scientific Review Special Emphasis Panel; BMIT/MEDI Member Conflict-Imaging.

Date: February 5, 2009.

Time: 11 a.m. to 4 p.m.

Agenda: To review and evaluate grant applications.

Place: National Institutes of Health, 6701 Rockledge Drive Bethesda, MD 20892 (Virtual Meeting).

Contact Person: Dharam S. Dhindsa, DVM, PhD, Scientific Review Officer, Center for Scientific Review, National Institutes of Health, 6701 Rockledge Drive, Room 5110, MSC 7854, Bethesda, MD 20892, (301)435–1174, *dhindsad@csr.nih.gov*.

Name of Committee: Integrative, Functional and Cognitive Neuroscience Integrated Review Group; Sensorimotor Integration Study Section.

Date: February 6, 2009.

Time: 8 a.m. to 5 p.m.

Agenda: To review and evaluate grant applications.

Place: Bahia Resort, 998 W. Mission Bay Drive, San Diego, CA 92109.

Contact Person: John Bishop, PhD, Scientific Review Officer, Center for Scientific Review, National Institutes of Health, 6701 Rockledge Drive, Room 5180, MSC 7844, Bethesda, MD 20892, (301) 435–1250, *bishopj@csr.nih.gov*.

Name of Committee: Bioengineering Sciences & Technologies Integrated Review Group; Modeling and Analysis of Biological Systems Study Section.

Date: February 6, 2009.

Time: 8 a.m. to 5 p.m.

Agenda: To review and evaluate grant applications.

Place: Sheraton Fisherman's Wharf Hotel, 2500 Mason Street, San Francisco, CA 94133.

Contact Person: Malgorzata Klosek, PhD, PhD, Scientific Review Officer, Center for Scientific Review, National Institutes of Health, 6701 Rockledge Drive, Room 4188, MSC 7849, Bethesda, MD 20892, (301)435–2211, *klosekm@mail.nih.gov*.

Name of Committee: Cell Biology Integrated Review Group; Intercellular Interactions Study Section.

Date: February 6, 2009.

Time: 8 a.m. to 5 p.m.

Agenda: To review and evaluate grant applications.

Place: Sheraton Fisherman's Wharf Hotel, 2500 Mason Street, San Francisco, CA 94133.

Contact Person: David Balasundaram, PhD, Scientific Review Officer, Center for Scientific Review, National Institutes of Health, 6701 Rockledge Drive, Room 5189, MSC 7840, Bethesda, MD 20892, 301–435–1022, *balasundaramd@csr.nih.gov*.

(Catalogue of Federal Domestic Assistance Program Nos. 93.306, Comparative Medicine; 93.333, Clinical Research, 93.306, 93.333, 93.337, 93.393–93.396, 93.837–93.844, 93.846–93.878, 93.892, 93.893, National Institutes of Health, HHS)

Dated: January 5, 2009.

Jennifer Spaeth,

Director, Office of Federal Advisory Committee Policy.

[FR Doc. E9–284 Filed 1–15–09; 8:45 am]

BILLING CODE 4140–01–M

DEPARTMENT OF HEALTH AND HUMAN SERVICES

National Institutes of Health

National Library of Medicine; Notice of Meeting

Pursuant to section 10(d) of the Federal Advisory Committee Act, as amended (5 U.S.C. Appendix 2), notice is hereby given of a meeting of the Board of Scientific Counselors, Lister Hill National Center for Biomedical Communications.

The meeting will be open to the public as indicated below, with attendance limited to space available. Individuals who plan to attend and need special assistance, such as sign language interpretation or other reasonable accommodations, should notify the Contact Person listed below in advance of the meeting.

The meeting will be closed to the public as indicated below in accordance with the provisions set forth in section 552b(c)(6), Title 5 U.S.C., as amended for the review, discussion, and evaluation of individual intramural programs and projects conducted by the National Library of Medicine, including consideration of personnel qualifications and performance, and the competence of individual investigators, the disclosure of which would constitute a clearly unwarranted invasion of personal privacy.

Name of Committee: Board of Scientific Counselors, Lister Hill National Center for Biomedical Communications.

Date: April 2–3, 2009.

Open: April 2, 2009, 9 a.m. to 12 p.m.

Agenda: Review of research and development programs and preparation of reports of the Lister Hill Center for Biomedical Communications.

Place: National Library of Medicine, Building 38, 2nd Floor, Board Room, 8600 Rockville Pike, Bethesda, MD 20892.

Closed: April 2, 2009, 12 p.m. to 4:30 p.m.

Agenda: To review and evaluate personal qualifications and performance, and competence of individual investigators.

Place: National Library of Medicine, Building 38, 2nd Floor, Board Room, 8600 Rockville Pike, Bethesda, MD 20892.

Open: April 3, 2009, 10 a.m. to 11:15 a.m.

Agenda: Review of research and development programs and preparation of reports of the Lister Hill Center for Biomedical Communications.

Place: National Library of Medicine, Building 38, 2nd Floor, Board Room, 8600 Rockville Pike, Bethesda, MD 20892.

Contact Person: Karen Steely, Program Assistant, Lister Hill National Center for Biomedical Communications, National Library of Medicine, Building 38a, Room 7s709, Bethesda, MD 20892, 301–435–3137, *ksteely@mail.nih.gov*.

Any interested person may file written comments with the committee by forwarding the statement to the Contact Person listed on this notice. The statement should include the name, address, telephone number and when applicable, the business or professional affiliation of the interested person.

In the interest of security, NIH has instituted stringent procedures for entrance onto the NIH campus. All visitor vehicles, including taxicabs, hotel, and airport shuttles will be inspected before being allowed on campus. Visitors will be asked to show one form of identification (for example, a government-issued photo ID, driver's license, or passport) and to state the purpose of their visit.

(Catalogue of Federal Domestic Assistance Program Nos. 93879, Medical Library Assistance, National Institutes of Health, HHS)

Dated: January 7, 2009.

Jennifer Spaeth,

Director, Office of Federal Advisory Committee Policy.

[FR Doc. E9–536 Filed 1–15–09; 8:45 am]

BILLING CODE 4140–01–M

DEPARTMENT OF HOMELAND SECURITY

Science and Technology Directorate; Record of Decision for the National Bio and Agro-Defense Facility Environmental Impact Statement

AGENCY: Science and Technology Directorate (Office of National Laboratories within the Office of Research), DHS.

ACTION: Record of Decision (ROD).

SUMMARY: The U.S. Department of Homeland Security (DHS), Science and Technology Directorate is issuing this ROD on the proposed siting, construction, and operation of the National Bio and Agro-Defense Facility (NBAF) (the Proposed Action). This ROD is based on the information and analysis in the NBAF Final Environmental Impact Statement (NBAF Final EIS) including public comments, and consideration of other appropriate factors such as national policy, site evaluation criteria, threat and risk assessment, costs, security, and other programmatic requirements. The Notice of Availability for the NBAF Final EIS was published in the **Federal Register** (73 FR 75665–75667) on December 12, 2008.

DHS has decided to implement the Preferred Alternative identified in Section 2.6 of the NBAF Final EIS. Implementation of this alternative would result in construction of the NBAF at the Manhattan Campus Site in Manhattan, Kansas, and initiation of the transition of mission activities and resources from the Plum Island Animal Disease Center (PIADC), located on Plum Island, New York, to the Manhattan Campus Site.

DHS appreciates the significant cost, time, and effort that each consortium expended during this comprehensive decision process, and DHS thanks the consortia for their support of the homeland security mission. The comprehensive and well thought out proposals from states around the Nation and their consortia reflected the impressive capabilities of their communities. Each consortium and host state demonstrated a strong desire to make the Nation safer for animal agriculture through advanced research on foreign animal and zoonotic and emerging diseases.

FOR FURTHER INFORMATION, CONTACT: The NBAF Final EIS (approximately 5,000 pages), Executive Summary, and this ROD are available on the DHS Web site at *http://www.dhs.gov/nbaf*. Requests for copies of the NBAF Final EIS, the Executive Summary, or this ROD should be mailed to Mr. James V. Johnson: Department of Homeland Security; Science and Technology Directorate; Office of National Laboratories, Room 10–052, Mail Stop #2100; 245 Murray Lane, SW., Building 410; Washington, DC 20528. You may also request copies from: toll-free facsimile 1–866–508–NBAF (6223); toll-free voice mail 1–866–501–NBAF (6223); or e-mail at

nbafprogrammanager@dhs.gov. For more information or general questions about the NBAF EIS, contact Mr. James V. Johnson at the address given previously.

Copies of the NBAF Final EIS, Executive Summary, and this ROD are also available for review at the following public reading rooms:

Georgia

University of Georgia Main Library, 320 South Jackson Street, Athens, GA 30602.

Oconee County Library, 1080 Experiment Station Road, Watkinsville, GA 30677.

Kansas

Manhattan Public Library, 629 Poyntz Avenue, Manhattan, KS 66502.

Hale Library, Kansas State University, Manhattan, KS 66506.

Mississippi

City of Flora Library, 144 Clark Street, Flora, MS 39071.

New York

Acton Public Library, 60 Old Boston Post Road, Old Saybrook, CT 06475.

Southold Free Library, 53705 Main Road, Southold, NY 11971.

North Carolina

Richard H. Thornton Library, 210 Main Street, Oxford NC 27565–0339.

South Branch Library, 1547 South Campus Drive, Creedmoor, NC 27522.

Texas

Central Library, 600 Soledad, San Antonio, TX 78205.

SUPPLEMENTARY INFORMATION:

I. Background

DHS prepared this ROD pursuant to the regulations of the Council on Environmental Quality (CEQ) for implementing the National Environmental Policy Act (NEPA) (40 CFR Parts 1500–1508) and DHS Directive 023–01 (renumbered from management Directive 5100.1), Environmental Planning Program. This ROD is based on: (1) The site's ability to satisfy the evaluation criteria published in the ''Public Notice Soliciting Expressions of Interest (EOIs) for Potential Sites for the NBAF'' (which was published in the **Federal Register** on January 19, 2006); (2) the site's ability to satisfy the preferences (including request of site in-kind contributions to offset infrastructure costs) communicated to all second round potential NBAF sites (by letter dated December 8, 2006); (3) confirmation of the site offers for site infrastructure costs (submitted to DHS by March 31, 2008); (4) the environmental impacts identified in the NBAF Final EIS; and (5) information contained in the supporting documents (*Threat and Risk Assessment, Site Cost Analysis, Site Characterization Study,* and *The Plum Island Facility Closure and Transition Cost Study*).

Purpose and Need for Agency Action

DHS is charged with the responsibility and has the national stewardship mandate for detecting, preventing, protecting against, and responding to terrorist attacks within the United States. These responsibilities, as applied to the defense of animal agriculture, are shared with the U.S. Department of Agriculture (USDA) and require a coordinated strategy to adequately protect the Nation against threats to animal agriculture. Consultations between DHS and USDA on a coordinated agricultural research strategy, as called for in the *Homeland Security Act of 2002* (Pub. L. 107–296) and Homeland Security Presidential Directive 9 (HSPD–9), *''Defense of United States Agriculture and Food,''* dated January 30, 2004, revealed a capability gap that must be filled by an integrated research, development, test, and evaluation infrastructure for combating agricultural and public health threats posed by foreign animal and zoonotic diseases. The DHS Science and Technology Directorate is responsible for addressing the identified gap.

Accordingly, to bridge the capability gap and to comply with HSPD–9, DHS proposed to build the NBAF, an integrated research, development, test, and evaluation facility.

Co-locating DHS with USDA's Animal and Plant Health Inspection Service—Veterinary Services (APHIS–VS) and Agricultural Research Service (ARS) at the NBAF would enable research, diagnostics, and responses to outbreaks in agricultural animals (i.e. cattle, swine, and sheep) at a U.S.-based facility. Co-locating these functions in a single secure facility would maximize synergies and provide enhanced capabilities for the detection and prevention of foreign animal diseases in the United States.

The NBAF would meet the capabilities required in HSPD–9 by providing a domestic, modern, integrated high-containment facility containing BSL–2, BSL–3E, BSL–3Ag, and BSL–4 laboratories for an estimated 250 to 350 scientists and support staff to safely and effectively address the accidental or intentional introduction into the United States of animal diseases of high consequence.

Currently, the Plum Island Animal Disease Center (PIADC), where much of the Biosafety Level-3 Agricultural (BSL–3Ag) research on foreign animal diseases is performed, is an essential component of the national strategy for protecting U.S. agriculture from threats caused by intentional attack (i.e., agro-terrorism) or unintentional introduction of foreign animal disease viruses such as foot and mouth disease virus (FMDV). However, PIADC was built in the 1950s, is nearing the end of its lifecycle, and does not contain the necessary biosafety level facilities to meet the NBAF research requirements. The NBAF would fulfill the need for a secure U.S. facility that could support collaborative efforts among researchers from Federal and state agencies, academia, and international partners to perform necessary research at the required biosafety levels 3 and 4. Additionally, as discussed in the recent *Report of the Commission on the Prevention of Weapons of Mass Destruction (WMD) Proliferation and Terrorism* (December 2008), the United States should continue to undertake a series of mutually reinforcing domestic measures to prevent bioterrorism.

Prior to passage of the Food, Conservation, and Energy Act of 2008 (H.R. 6124 [2008 Farm Bill]) which became law on May 22, 2008, the United States Code (21 U.S.C. Section 113a) stipulated that live FMDV could not be studied on the U.S. mainland unless the Secretary of Agriculture made a determination that such study was necessary and in the public interest and issued a permit for such research to be conducted on the mainland. Section 7524 of the 2008 Farm Bill directs the Secretary of Agriculture to issue a permit to the Secretary of Homeland Security for work on the live FMDV at any facility that is a successor to the Plum Island Animal Disease Center and charged with researching high-consequence biological threats involving zoonotic and foreign animal diseases. The permit is limited to a single successor facility. On December 18, 2008, the Secretary of Homeland Security, Michael Chertoff sent a letter to the Secretary of Agriculture, Ed Schafer requesting that a permit be issued if a mainland site is selected. On January 9, 2009 DHS received a letter from Secretary Schafer that affirmed USDA's intention of complying with Congressional direction to issue a permit for the movement and use of live FMDV at the NBAF.

As stated in Section 2.2.2 of the NBAF EIS, the NBAF may be operated as a

Government Owned/Government Operated Facility (GOGO) or as a Government Owned/Contractor Operated Facility (GOCO). The final decision regarding the operating model for the NBAF will be made at a later date. The current planning approach is to utilize the Plum Island operating model, which is a GOGO facility. Should a decision be made to operate the NBAF as a GOCO facility, procurement of such services would follow the Federal Acquisition Regulation and applicable DHS procurement requirements, and a program management plan, which would set forth management, supervisory, and contracting activities between the Federal government and a contractor, would be prepared.

Site Selection Process and Evaluation Criteria

DHS conducted a competitive site selection process to identify and evaluate potential candidate sites for the NBAF; Plum Island was also included as an alternative site for evaluation, as described in Chapter 2, Section 2.3.1 of the NBAF Final EIS. The site selection process was initiated by publication of a Notice of Request for EOI submissions for Potential Sites for the NBAF in the **Federal Register** on January 19, 2006 (71 FR 3107–3109). DHS requested EOI submissions from Federal agencies, state and local governments, industry, academia, and interested parties and organizations for potential locations that would accommodate the construction and operation of the NBAF.

Twenty-nine EOI submissions were received from consortia comprised of various governmental, industry, and academic partners by the March 31, 2006 response deadline. DHS developed and implemented a rigorous process for the first round evaluation of the 29 EOIs received, against DHS's four evaluation criteria (i.e., Proximity to Research Capabilities, Proximity to Workforce, Acquisition/Construction/Operations (ACO) Requirements, and Community Acceptance) and associated sub-criteria. These criteria and their associated sub-criteria were developed by an interagency working group to ensure that the NBAF would meet the interdependent needs of DHS and USDA to adequately protect the Nation against biological threats to animal agriculture. DHS emphasizes that the Proximity to Research Capabilities and Workforce ratings apply exclusively to the specific research and workforce needs of the proposed NBAF and are not a general statement on the research capability and workforce expertise of the proposing states and consortia. For example, the Proximity to Research evaluation criterion considered existing research programs that could be linked to NBAF mission requirements pertaining to large livestock diseases studied in Biosafety Level 3 and 4 facilities and the Proximity to Workforce evaluation criterion considered site proximity to a local labor force with expertise in biocontainment facilities relevant to the NBAF mission. Included within the ACO criterion were sub-criteria in the areas of: (1) Land acquisition/development potential, (2) environmental compatibility, including the presence of existing environmental concerns/contamination or environmentally sensitive areas, and (3) adequate utility infrastructure. These factors, in part, enabled DHS to screen candidate sites for significant environmental constraints prior to initiating the EIS. Three committees comprised of Federal employees evaluated the EOI submissions, assessing their strengths, weaknesses, and deficiencies against the four evaluation criteria and associated sub-criteria. A Steering Committee, also comprised of Federal employees, made recommendations to the DHS Selection Authority (DHS Under Secretary for Science and Technology), who then selected those sites that had sufficient qualifications with regard to the evaluation criteria, and eliminated others from further consideration. On August 9, 2006, DHS selected 18 sites submitted by 12 consortia for further review.

Subsequently, on December 8, 2006, DHS sent a letter to the 12 remaining consortia. This letter requested additional information to complete the next phase of the evaluations, communicated DHS's ''preferences'' within each of the four criteria, provided instructions on how to submit the requested information, and provided information on the next steps in the site selection process. DHS stated it would give strong preference to six specific ''preferences'' in the next phase of the evaluation. Two examples of these preferences are: (1) For the proximity to research criterion, that the proposed site is within a comprehensive research community that has existing research programs in areas related to the NBAF mission requirements (veterinary, medical and public health, and agriculture), and (2) for the ACO criterion, any in-kind contributions [e.g., deeded land at no cost rather than sale, new utility provisions and/or upgrades (e.g., sewer, electricity, water, chilled water, steamed water, etc.) and new roadways] would be offered to DHS (by the consortium, state government, local government, or private entities). The decision to offer land, financial offsets or other incentives was solely at the discretion of the consortium. This letter is posted on the DHS Web site at *http://www.dhs.gov/nbaf*.

Upon receipt of the requested additional information and in-kind offers from the consortia in February 2007, an evaluation team of USDA and DHS Federal employees conducted site visits to 17 sites. The Hinds County Site, originally proposed by the Mississippi Consortium, was withdrawn in a letter DHS received on April 5, 2007. The intent of each site visit was to: (1) Verify the information provided and representations made in the EOI submissions and the additional information submitted, (2) enable evaluation committee representatives to view any observable physical conditions and constraints at the proposed sites and, if applicable, (3) to view the sites' utilities and infrastructure. Based on the evaluation team's analysis of the additional information and observations on the site visits, the team provided recommendations to the DHS Selection Authority. Additionally and independently of the evaluation team, the DHS Selection Authority (DHS Under Secretary for Science and Technology) visited each of the 17 sites.

In July 2007, DHS identified five site alternatives that surpassed others in meeting the DHS evaluation criteria, sub-criteria, and DHS preferences, and determined that they, along with the Plum Island Site, would be evaluated in the EIS as reasonable alternatives for the proposed NBAF. The *Final Selection Memorandum for Site Selection for the Second Round Potential Sites for the National Bio and Agro-Defense Facility (NBAF)* and the *Plum Island Memorandum for the Record,* which are available on the DHS_Web site at *http://www.dhs.gov/nbaf*, documented the findings of this process. The site alternatives selected for evaluation in the EIS were:

South Milledge Avenue Site; Athens, Georgia

Manhattan Campus Site; Manhattan, Kansas

Flora Industrial Park Site; Flora, Mississippi

Plum Island Site; Plum Island, New York

Umstead Research Farm Site; Butner, North Carolina

Texas Research Park Site; San Antonio, Texas

NEPA Process

On July 31, 2007, DHS published a Notice of Intent in the **Federal Register** (72 FR 41764–41765) to prepare the NBAF EIS to evaluate the environmental impacts of constructing and operating the proposed NBAF at one of the reasonable site alternatives. The 60-day scoping period for the NBAF EIS ended on September 28, 2007. Scoping meetings were held in the vicinity of the six site alternatives (Old Saybrook, Connecticut; Southold, New York; Manhattan, Kansas; Flora, Mississippi; San Antonio, Texas; Creedmoor, NC; and Athens, Georgia), along with one regional meeting in Washington, DC.

More than 1,350 people attended the scoping meetings. Nearly 300 people provided oral comments at the public meetings, and more than 3,870 comments were received during the scoping period. Areas of concern shared by many commentors during scoping were the placement of the proposed NBAF in a highly populated area or in an area that houses institutionalized populations. These concerns focused on the public health risk should an accidental or intentional (criminal or terrorist) release occur, its potential effects on the population, and the ability of affected communities to evacuate the area. Other concerns were: locating the facility near herds or flocks of animals susceptible to the diseases studied, environmental effects to biological and natural resources, and resources required for the construction and operation of the NBAF, particularly water. Details on the scoping process and issues identified are documented in the February 2008, *NBAF EIS Scoping Report,* which is available on the DHS Web site at *http://www.dhs.gov/nbaf* and in the aforementioned public reading rooms.

The Notice of Availability of the NBAF Draft EIS was published in the **Federal Register** on June 27, 2008 (73 FR 36540–36542). The public comment period extended through August 25, 2008. Thirteen public meetings were held between late July and mid-August 2008 at the same locations as the scoping meetings or at nearby alternate locations as follows: Washington, DC (one meeting); Butner, North Carolina (two meetings); Manhattan, Kansas (two meetings); Flora, Mississippi (two meetings); San Antonio, Texas (two meetings); Old Saybrook, Connecticut (one meeting); Greenport, New York (one meeting); and Athens, Georgia (two meetings).

During the 60-day public comment period on the NBAF Draft EIS, more than 1,770 individuals attended the public meetings on the NBAF Draft EIS, 378 of whom provided oral comments. Analysis of the oral and written comment documents received, yielded more than 5,400 delineated comments. Specifically, a number of comments focused on the ability of DHS to safely operate the NBAF and the potential for a pathogenic release to occur through accidents, natural phenomena, and terrorist actions. The majority of the comments related to the following concerns: (1) Ability of DHS to safely operate a biosafety facility; (2) the May 2008 U.S. Government Accountability Office (GAO) report regarding whether FMD research could be safely conducted on the U.S. mainland; (3) impacts of natural phenomena such as tornadoes, earthquakes, and hurricanes on the NBAF resulting in the release of a pathogen; (4) the possibility that an escaped infected mosquito vector would cause a pathogen such as Rift Valley fever virus to become established in the United States; (5) economic effects of a release or a perceived release on the local, state, and national livestock industry or on local deer populations and the hunting industry; (6) accident risk of transportation of infectious agents; (7) the likelihood that the NBAF and the surrounding community would become a prime terrorist target that DHS could not adequately protect from attack; (8) release of a pathogen due to human error or by disgruntled employee(s); (9) the availability of appropriate funding to safely construct and operate the NBAF; (10) use of the NBAF to manufacture bioweapons; (11) the need for and effects of mosquito control and spraying of insecticides; (12) the site selection process and the evaluation criteria used to select the Preferred Alternative; (13) waste management regarding carcass disposal, including identification of precise methods of disposal, the effects to local sewage treatment infrastructure, and possible effects to air quality from incineration; (14) pollution of ground or surface water resources due to spills and leaks; (15) the amount of water that would be used by the NBAF in light of the current regional drought in North Carolina and Georgia; (16) in Georgia, the proximity of the South Milledge Avenue Site to the State Botanical Gardens, the Audubon-designated Important Bird Area, and the Oconee River; (17) in North Carolina, concerns that institutionalized populations were not afforded the appropriate level of analysis; (18) in New York, the limited routes from an island location should an accident requiring evacuation occur; and (19) in Kansas, the number of cattle in the region and the economic effects of a release impacting them.

All comments received during the public comment period were considered. DHS's responses to comments are presented in Appendix H of the NBAF Final EIS, and the NBAF EIS was revised, as necessary, in response to comments. The Notice of Availability for the NBAF Final EIS was published in the **Federal Register** on December 12, 2008 (73 FR 75665–75667).

As identified in the Notice of Availability of the NBAF Draft EIS and as further discussed in Section 2.6 of the NBAF Final EIS, additional studies were performed to provide important decision-making information, and for formulation of this ROD. The supporting documents considered include: (1) *Threat and Risk Assessment* dated October 2008, (2) *Site Cost Analysis,* dated July 25, 2008 (3) *Site Characterization Study,* dated July 25, 2008 (4) *Plum Island Facility Closure and Transition Cost Study* dated July 2008; and (5) a prior analysis of the alternative sites against DHS's four evaluation criteria (i.e., *Final Selection Memorandum for Site Selection for the Second Round Potential Sites for the National Bio and Agro-Defense Facility (NBAF)* dated July 2007, and *The Plum Island Memorandum for the Record* dated November 2008). CEQ regulations (40 CFR 1505.1(e)) encourage agencies to make ancillary decision documents available to the public before a decision is made. Accordingly, the *Site Cost Analysis, Site Characterization Study, Plum Island Facility Closure and Transition Cost Study, Final Selection Memorandum,* and other reports were made available in August 2008 on the DHS Web site with redactions to mask certain sensitive financial and security information. The *Threat and Risk Assessment,* which was designated For Official Use Only, was not posted on the Web site. Relevant information from these reports was used in the preparation of the NBAF Final EIS.

II. Alternatives Considered

DHS evaluated the potential environmental impacts that could result from implementation of alternatives for construction and operation of the NBAF. A No Action Alternative and the six site alternatives were analyzed in the NBAF EIS.

No Action Alternative

Under the No Action Alternative, consideration of which is required by NEPA, the NBAF would not be constructed. DHS and USDA would continue to use the PIADC on Plum

Island, New York. Plum Island is an 840-acre island located about 12 miles southwest of New London, Connecticut, and 1.5 miles from the northeast tip of Long Island, New York (i.e., Orient Point). While the island is technically located in the Village of Greenport, Town of Southold, Suffolk County, New York, Plum Island is administered wholly by the Federal government. The *Homeland Security Act of 2002* recognized that protecting the U.S. agricultural infrastructure is a critical element of homeland security and transferred PIADC from USDA to DHS in 2003. While DHS now has responsibility for operating PIADC, both DHS and USDA conduct programs there as part of an integrated agro-defense strategy.

Under the No Action Alternative, investment in necessary facility upgrades, replacements, and repairs, which are ongoing, would continue so that PIADC could continue to operate at its current BSL–3Ag capability. However, PIADC's capabilities would not be expanded to address the NBAF mission requirements. The BSL–3Ag work at PIADC (large livestock research on foreign animal diseases and zoonotic diseases in the United States) would continue, and BSL–4 research would continue to be performed outside of the United States. This alternative does not satisfy the purpose of and the need for the Proposed Action.

South Milledge Avenue Site; Athens, Georgia

This alternative would locate the NBAF at the South Milledge Avenue Site located west of the South Milledge Avenue and Whitehall Road intersection in Clarke County, Georgia. The site is part of the University of Georgia Whitehall Farm and is located near the University of Georgia Livestock Instructional Area. The site is a 67-acre tract of land consisting of open pastureland and wooded land and is utilized by the University of Georgia Equestrian Team. The topography is rolling terrain, which slopes towards the southwest. The site has been undeveloped land since at least 1936 and is currently zoned for government use.

Manhattan Campus Site; Manhattan, Kansas

This alternative would locate the NBAF on the campus of Kansas State University (KSU) immediately adjacent to the Biosecurity Research Institute. The Biosecurity Research Institute, constructed in 2006, is a KSU BSL–3Ag research facility. The Manhattan Campus Site consists of approximately 48.4 acres southeast of the intersection of Kimball Avenue and Denison Avenue. The site has been used for animal research since the 1970s. The site includes several structures, including five research buildings, a residential structure, and a storage building for recycling materials. The site is currently zoned as University District and was annexed to the City of Manhattan in 1994. The 48.4-acre site could be expanded to 70 acres.

Flora Industrial Park Site; Flora, Mississippi

This alternative would locate the NBAF at the Flora Industrial Park Site, which is located in Madison County, Mississippi. The site is owned by the Madison County Economic Development Authority. Flora Industrial Park is a mixed-use commercial park 45 miles from the Jackson-Evers International Airport. Additional land is available surrounding the site for support facilities. The site is located on the east side of U.S. Highway 49, north and east of the intersection with North 1st Street. The Flora Industrial Park Site is approximately 150 acres of idle pasture land with two small ponds and a few scattered wooded areas. An overhead power transmission line is present through the south-central and west-central portions of the site. The site is currently zoned as limited industrial. Based on historical information, the site had previously been cultivated and was in pasture land and previously occupied by two small tenant houses and one hay barn. Adjoining properties appear to have been predominantly agricultural and rural residential until construction of the southwest-adjoining Primos Manufacturing Company in the early 2000s.

Plum Island Site; Plum Island, New York

This alternative would locate the NBAF on Plum Island, New York. The Plum Island Site consists of approximately 24 acres of land located directly to the east of the existing PIADC, which is on the western shore of Plum Island. Although one of the requirements listed in DHS's request for EOIs stated that a minimum of 30 acres would be required, the Plum Island Site would not require the full 30 acres. Existing facilities associated with PIADC would be available for use with the NBAF and would reduce the amount of space required. The 24-acre site has no existing structures. Dense underbrush and gravel roads are found within the southwestern and northeastern portions. The southeastern portion of the island has previously been used for sand mining and is generally void of vegetation. The northwestern portion of the island has minor vegetation. A potable water line bisects the site from east to west, and an underground electric service borders the site on the north side. Based on a review of the historical information, the Plum Island Site was formerly utilized as a landfill area for miscellaneous non-infectious wastes associated with PIADC, but the site has since been remediated.

Umstead Research Farm Site; Butner, North Carolina

This alternative would locate the NBAF at the Umstead Research Farm Site in Butner, North Carolina. The site is currently owned and operated by North Carolina Department of Agriculture, Research Farms Division. The site is located north of the terminus of Dillon Drive along the northern property boundary of the C.A. Dillon Youth Development Center in Butner. The site is a 249-acre tract of pasture, grassland, and wooded land that is zoned as institutional. The site area was operated from early 1942 to June 1943 as part of Camp Butner, a training facility for light infantry and artillery during World War II. Other operations included ammunition storage, a redeployment center, and a general and convalescent hospital. The site has been undeveloped wooded land since at least 1940, except for one cemetery. The site has historically been maintained as undeveloped wooded land; however, in the fall of 2001, the site and surrounding area were partially logged.

Texas Research Park Site; San Antonio, Texas

The Texas Research Park Site in San Antonio, Texas, extends over the Bexar County line into a portion of Medina County. The 100.1-acre site is located west of Lambda Drive, south of the proposed extension of Omicron Drive, and is currently vacant, undeveloped land covered in dense vegetation comprised of trees, shrubs, and tall prairie grasses. The site appears to have consisted of vacant, undeveloped ranch land before 1938 to the present. The site has no zoning category because it is outside the San Antonio city limits. The entire Texas Research Park property is a 1,000-acre industrial district 4 miles outside the San Antonio city limits.

III. Preferred Alternative

CEQ regulations require an agency to identify its preferred alternative(s) in the final environmental impact statement (40 CFR 1502.14). The

preferred alternative is the alternative that the agency believes would best fulfill its statutory mission, giving consideration to environmental, economic, technical, and other factors. DHS's Preferred Alternative and the basis for its selection are described in Section 2.6 of the NBAF Final EIS. Additionally, DHS published the *Preferred Alternative Selection Memorandum* in December 2008, which describes in more detail the basis for the selection of the Preferred Alternative, on the DHS Web site at *http://www.dhs.gov/nbaf.* DHS's Preferred Alternative is to construct and operate the NBAF at the Manhattan Campus Site in Manhattan, Kansas.

DHS developed and implemented a decision process to identify the Preferred Alternative in the NBAF Final EIS. A Steering Committee, comprised of Federal employees from DHS and USDA, was convened to lead the evaluation process and make recommendations to the DHS Decision Authority (the DHS Under Secretary for Science and Technology). The process involved a qualitative analysis of the strengths and weaknesses of each action alternative (i.e., site alternative) followed by an overall data comparison to develop a relative ranking of each site alternative. The Steering Committee also considered the No Action Alternative and weighed it against the Proposed Action of constructing and operating the NBAF at the highest ranked site alternative.

The Steering Committee updated the findings from the previously described second round evaluation of site alternatives using new and emerging data collected since July 2007. This data was contained in the following support documents, as previously discussed: (1) *Threat and Risk Assessment* dated October 2008, (2) *Site Cost Analysis*, dated July 25, 2008, (3) *Site Characterization Study*, dated July 25, 2008, and (4) *Plum Island Facility Closure and Transition Cost Study* dated July 2008. Additionally, on February 29, 2008, DHS sent a letter to each consortium requesting they confirm or update the details of their site offers (in response to the December 8, 2006 DHS letter) and provided a final opportunity to identify contingences to their offers. DHS also provided background on the process it would follow to identify its preferred site alternative. The February 29, 2008 letter was not a request for financial proposals, but rather an opportunity for the consortia to verify and update their original in-kind offers received in February 2007 in response to the December 2006 letter request. DHS required responses to be postmarked by March 30, 2008 (later changed to March 31, 2008 to fall on a weekday). The decision to offer land, funds, or other assets was solely at the discretion of each consortium. The amount of the contribution and how the contribution would be funded (e.g., bonds, taxes) was determined by the consortia and/or the state and local government officials.

The Steering Committee next considered the environmental impacts presented in the NBAF EIS including the public comments made at the public meetings and by other means during the 60-day public comment period on the NBAF Draft EIS, along with the information in the *Threat and Risk Assessment.* The Steering Committee found that the NBAF EIS and the *Threat and Risk Assessment* presented very little differentiation between the sites. In fact, the NBAF EIS determined that the risk of release of a biological pathogen from the NBAF was independent of where the NBAF was located. The Steering Committee also determined that, based on its review of the NBAF EIS, the likelihood of a release of a pathogen was very low, given appropriate attention to the design, construction, and operation of the NBAF with an array of safety controls. The Steering Committee further determined that the risk of release of any identified pathogen proposed for study within the NBAF could be mitigated by implementation of operational protocols, rigid security measures, and adherence to the U.S. Government biosecurity guidelines.

With respect to the economic consequence if a release of FMDV from the NBAF were to happen, the Steering Committee found that the Nation's meat export trade status would suffer the greatest impact and that this is independent of the site of the NBAF. The World Organization for Animal Health (OIE) affirms the Steering Committee's findings. OIE, created in 1924 by 28 countries, issues standards, guidelines, and recommendations which are designated as the international referenced in the field of animal diseases and zoonoses. As of January 2009, the OIE consisted of 172 nations, including the U.S. The OIE's determination regarding a country's FMD status significantly impacts that country's ability to export meat. Dr. Bernard Vallat, the Director General of the OIE, in a letter to DHS, dated November 24, 2008, stated the following:

> ''You asked a specific question as to whether it would make a difference in terms of the health status of a country if a foot-and-mouth (FMD) disease outbreak would occur in the mainland or on an off shore island like Plum Island. My response is based on today's international recommendations, as published in the *Terrestrial Animal Health Code* of the OIE, which constitutes the only internationally accepted standards. Today's international standards provide recommendations that significantly reduce the sanitary and economic impact of the affected country or zone in case of such an outbreak, provided there is a credible veterinary infrastructure that can guarantee the early detection and the rapid response in accordance with the measures recommended by the OIE. However, regardless of where in the territory of a country an outbreak of FMD occurs, the FMD status of the country is lost immediately upon the first notification to the OIE. The difference, in terms of the national impact of this outbreak, is more related to how the country's authorities respond to the incursion, rather then where the outbreak occurs.
>
> As was the case in the recent outbreak at Pirbright, United Kingdom, the veterinary authorities immediately notified the OIE and established a ''containment zone'' as defined in the *Terrestrial Animal Health Code.* Once they could demonstrate that all cases had been contained within such zone and that no further cases were detected within a 30-day period, the entire country regained its FMD-free status, with the only exception of the containment zone. The necessary and lengthy period to regain the free status, as described in the *Code* is not limited to the containment zone, something in the past applied to the entire affected country or zone.''

Chapter 4.3 of the OIE *Terrestrial Animal Health Code* (Zoning and Compartmentalization) includes guidance on establishing a containment zone. Article 4.3.3 of the *Code* states:

> ''Establishment of a containment zone should be based on a rapid response including appropriate standstill of movement of animals and commodities upon notification of suspicion of the specified disease and the demonstration that the outbreaks are contained within this zone through epidemiological investigation (trace-back, trace-forward) after confirmation of infection. The primary outbreak and likely source of the outbreak should be identified and all cases shown to be epidemiologically linked. For the effective establishment of a containment zone, it is necessary to demonstrate that there have been no new cases in the containment zone within a minimum of two incubation periods from the last detected case.''

The Steering Committee determined that, based on the lack of differentiation among the sites regarding the risk of a release and the economic consequences of a release, that it was most important to select a location that would optimize the capability to diagnose and cure large animal diseases through strong research programs and expedient diagnostic and response capabilities. Furthermore, the Steering Committee found that the environmental impacts analyzed in the

EIS and the site specific threats were all very similar and that there were only minor differentiators in the EIS and the *Threat and Risk Assessment.* Therefore, the key differentiators among the sites were DHS's initial four evaluation criteria. Because the NBAF is intended to be the Nation's preeminent research facility for foreign animal and zoonotic disease research, the site's proximity to research capabilities that can be linked to NBAF mission requirements was emphasized among the four evaluation criteria. Overall site evaluations were followed by the ranking of the sites to determine the recommended site alternative.

The Steering Committee then considered the No Action Alternative and weighed it against the Proposed Action of constructing and operating the NBAF at the highest ranked site alternative to determine the recommended Preferred Alternative. Based on numerous strengths in terms of the evaluation criteria, the Steering Committee concluded that the Manhattan Campus Site best met the purpose and need to site, construct and operate the NBAF.

The Manhattan Campus Site's location near KSU provides proximity to existing research capabilities that can be linked to NBAF mission requirements. Additionally, the site's proximity to the KSU College of Veterinary Medicine, KSU College of Agriculture, and the Biosecurity Research Institute is relevant to the NBAF mission and is, therefore, a significant strength. The NBAF EIS demonstrated that construction and operation of the NBAF at the Manhattan Campus Site would be environmentally acceptable, because almost all environmental impacts fell into the ''no impacts to minor impacts'' category. As stated in the NBAF EIS, the risk of release of a pathogen was independent of where the NBAF was located. The information presented in the *Threat and Risk Assessment* was found to be comparable to the other site alternatives. The Manhattan Campus Site alternative demonstrated very strong community acceptance from local, state, and Federal officials and stakeholders. Additionally, the consortium offered a substantial, unconditional offset package, including the immediate and long-term use of the existing Biosecurity Research Institute, an existing Biosecurity Level 3 facility within close proximity to the Manhattan Campus Site in which research pertaining to livestock disease is conducted. Taking into consideration the offsets to infrastructure costs and ''in-kind'' contributions offered by the consortia, the Manhattan Campus Site is among the least expensive location to construct and operate the NBAF. Following a comparison of this site with the No Action Alternative, DHS selected the Manhattan Campus Site as the Preferred Alternative for implementation.

IV. Alternatives Considered But Dismissed

In developing a range of reasonable alternatives early in the NEPA process, DHS considered other potential alternatives, including suggestions made by the public during the scoping process. The following alternatives were considered but were determined not to be reasonable alternatives for evaluation in the NBAF Draft EIS:

Upgrade PIADC. The proposed NBAF would require BSL–4 capability. PIADC does not have BSL–4 laboratory space, and the existing infrastructure is inadequate to support a BSL–4 laboratory. Refurbishing the existing facilities and obsolete infrastructure to allow PIADC to meet the new mission would be more costly than building the NBAF on Plum Island. In addition, for the existing facility to be refurbished, current research activities might have to be suspended for extensive periods.

Use Existing Laboratory Facilities. No existing U.S. facility could meet the NBAF mission needs as determined by DHS and USDA. Although a number of BSL–3 and BSL–4 facilities are located in the U.S., they do not have the capacity to conduct the large livestock research required. Similar facilities in Winnipeg, Canada, and Geelong, Australia, do not have the capacity to address potential outbreak scenarios in the United States in a timely manner and cannot guarantee their availability to meet U.S. research requirements.

Other Locations. Other potential locations were considered during the NBAF site selection process, but they were eliminated based on evaluation by the DHS evaluation committee. It was suggested during the scoping process that the NBAF be constructed in a remote location such as an island distant from populated areas or in a location that would be inhospitable (e.g., desert or arctic habitat) to escaped animal hosts or vectors. However, the evaluation criteria called for proximity to research programs that could be linked to the NBAF mission and proximity to a technical workforce with applicable skills for the NBAF mission. The Plum Island Site represents an isolated location while meeting the evaluation requirements. It was also suggested that the NBAF could be constructed beneath a mountain; however, the cost and feasibility of such a construction project would be prohibitive.

V. Summary of Environmental Impacts

A sliding-scale approach was the basis for the environmental impacts analysis in the NBAF EIS. This approach reflects CEQ requirements for implementing NEPA and its instruction that Federal agencies preparing EISs ''focus on significant environmental issues and alternatives'' (40 CFR 1502.1) and that impacts be discussed ''in proportion to their significance'' (40 CFR 1502.2(b)). That is, certain aspects of the alternatives have a greater potential for creating environmental effects than others. Thus, the NBAF EIS addressed resource areas pertinent to the sites considered. Impacts were assessed for land use and visual resources; infrastructure; air quality; noise; geology and soils; water resources; biological resources; cultural resources; socioeconomics; traffic and transportation; existing hazardous, toxic, or radiological waste; waste management; environmental justice; as well as operational impacts on human health and safety and wildlife from normal operations and accidental releases of pathogens. Environmental impacts of current, proposed, and reasonably foreseeable activities at candidate sites were included in the cumulative impacts analysis presented in the NBAF EIS.

DHS has weighed environmental impacts as one factor in its decision making, analyzing existing environmental impacts and the potential impacts that might occur for each reasonable alternative, including the irreversible or irretrievable commitments of resources. Under the No Action Alternative, continued operations of the PIADC would have little or no incremental environmental impacts, except that construction of ongoing infrastructure upgrades could have negligible to minor and temporary effects on such resources as land resources, geology and soils, and water resources during construction.

As demonstrated in the NBAF Final EIS, short term impacts associated with the construction of the NBAF and normal facility operations under the Proposed Action are not expected to result in any unacceptable environmental consequences at any of the site alternatives, though each site does have its own unique adverse environmental aspects. Potential construction impacts have been minimized through the site selection process and proposed placement of the proposed NBAF within the boundaries of each site alternative, based on the

conceptual design. There would be little or no direct effects to wetlands, water resources, natural biotic communities, protected species, or cultural and archaeological resources at any site alternative. Normal facility operations were determined to have no potential for adverse impacts on biological resources and human health and safety. The NBAF would provide state-of-the-art operating procedures and biocontainment design features to minimize the potential for laboratory-acquired infections and accidental releases of pathogens. Nonetheless, some minor impacts would occur from construction and operations and are unavoidable under the Proposed Action.

Land Use and Visual Resources

Under each of the site alternatives, conversion of approximately 30 acres of open land to the NBAF would occur. Land use would be consistent with the local zoning classifications under all site alternatives, except that an amendment to the Clarke County, Georgia comprehensive plan might be required to allow the NBAF to be constructed at the South Milledge Avenue site. Placement of the NBAF on undeveloped land would alter the viewshed of each of the sites, although this effect may be most pronounced at the South Milledge Avenue Site and least pronounced at the Manhattan Campus Site due to the adjoining and nearby land uses, respectively. Similarly, during normal operations, outdoor nighttime lighting would have impacts at all sites, with the detrimental effects varying based on adjoining land uses. Use of shielded fixtures and the minimum intensity of lighting that are necessary to provide adequate security could mitigate the effects.

Infrastructure

Construction of some infrastructure improvements, including utilities and roadways would be required at all sites, and their environmental impacts were evaluated in the NBAF EIS. The need for infrastructure improvements would be greatest for the Umstead Research Park Site, the South Milledge Avenue Site, the Plum Island Site, and the Flora Industrial Park Site with the least for the Manhattan Campus Site. Utility requirements would be similar for all site alternatives. Water use would vary to some degree for each site, but NBAF operation would result in use of approximately 36 million (Plum Island Site) to 52 million (Texas Research Park Site) gallons per year. Electric power demands would be very similar for all sites ranging from 12.8 to 13.1 megawatts, with connection to existing or new substations required at all site alternatives. A new substation would be required at the South Milledge Avenue Site and construction of new underwater power cables would be required to provide redundant power to the Plum Island Site. Operation at all sites except the Plum Island Site would use natural gas as the primary fuel for operating the NBAF. New connecting lines would be needed at the South Milledge Avenue Site, the Flora Industrial Park Site, and the Umstead Research Farm Site. For sanitary sewer, the NBAF operation would generate between 25 million and 30 million gallons of wastewater per year. Capacity would be available from all existing or planned wastewater treatment facilities serving the alternative sites. Wastewater discharged by the NBAF would meet all local wastewater permit requirements and would be pretreated as necessary. New sewer lines would be needed at the Flora Industrial Park Site, the Umstead Research Farm Site, and the Texas Research Park Site.

Air Quality and Severe Weather

Air quality effects would occur with construction and operation of the NBAF for all sites with similar regulatory air permitting requirements. Operation of the NBAF would result in air emissions from boilers, emergency generators, and traffic from employees and deliveries. Additional air emissions would occur from carcass and pathologic waste treatment that may include incineration, alkaline hydrolysis, or rendering. Conservative estimates of air emissions indicate that operation of the NBAF could affect regional air-quality standards for $PM_{2.5}$ (particulate matter with diameter less than or equal to 2.5 microns). The Plum Island Site is in non-attainment areas for ozone and $PM_{2.5}$ therefore, air emissions from the NBAF would need to comply with the State Implementation Plan (SIP) to improve air quality and the requirement that a conformity analysis be performed. Following final design, the potential and actual NBAF air emissions will be evaluated to demonstrate compliance with National Ambient Air Quality Standards and applicable air-quality permitting requirements.

The NBAF would be designed to withstand normal meteorological conditions and the effects of severe weather events including tornadoes. Specifically, NBAF would be designed and constructed to meet or exceed the wind load standards of the International Building Code, American Society of Civil Engineers Standard No. 7, Minimum Design Loads for Buildings and Other Structures, and the codes of the local jurisdiction, which take into account the functional use of the facility as a laboratory.

Noise

Construction of NBAF would result in some temporary increase in noise levels near the sites from construction equipment and activities. As a consequence of the NBAF operations, minor increases in noise levels from employee traffic and heating and cooling facilities would occur and operation of emergency generators would result in sporadic noise increases during testing. Impacts on adjoining properties would vary based on the associated land uses and presence of sensitive receptors. Potential impacts could be mitigated by conducting generator testing during normal business hours. If blasting is required during construction, a blasting plan would be developed to mitigate potential noise levels.

Geology and Soils

Effects to geology and soils would be similar for all sites. The NBAF would be designed to withstand and minimize the effects of earthquakes including the seismic design provisions of the International Building Code, American Society of Civil Engineers Standard No. 7, Minimum Design Loads for Buildings and Other Structures, and the codes of the local jurisdiction, which take into account the functional use of the facility as a laboratory. Temporary effects to soils would occur due to excavation and site clearing, but erosion control measures would minimize any adverse effects from construction and operation. Prime and unique farmland soils would potentially be affected at all sites. A detailed geotechnical study would be performed to guide the final facility design in order to mitigate the effects of any geologic hazards on the NBAF to include identification of fractures, geologic fault traces, voids or other solution features, unstable soils, or other subsurface conditions which could impact facility construction and operations.

Water Resources

Potential effects to water resources could occur with construction activities and would be similar for all sites. However, the South Milledge Avenue Site, the Flora Industrial Park Site, and the Umstead Research Farm Site are closer to surface waters so the potential for effects are greater at these sites. Runoff from the construction site has the potential to enter surface or groundwater sources, but stormwater management during construction would

minimize the potential for this to occur. Similar effects could occur with operation of the NBAF. Strict compliance with stormwater pollution prevention plans and spill management protocols would minimize the potential and mitigate the potential effects of a spill. Wastewater would be collected and conveyed to existing wastewater treatment facilities and pretreated as required to meet all local wastewater permit requirements.

Biological Resources

Effects to vegetation, wetlands, wildlife, aquatic life, and threatened or endangered species would be similar for all site alternatives with a few exceptions. Site clearing would remove approximately 30 acres of vegetation, although all of the sites have been previously disturbed to some degree. Wetlands would be affected at the South Milledge Avenue Site from road and utility crossings (less than 0.5 acres), and approximately 0.2 acres of forested uplands would be lost. Threatened or endangered species, aquatic resources, and wildlife would not be directly affected by construction or normal operations at any site. Noise and light from the NBAF could affect wildlife, particularly migratory birds, with this potential determined to be greatest for the South Milledge Avenue Site and Umstead Research Farm Site. Mitigation of potential noise and light impacts were previously described.

During operation, an accidental release of pathogens from the NBAF would adversely affect susceptible wildlife populations and would be similar for all sites. To minimize potential impacts in the unlikely event of a release, DHS would have site-specific standard operating procedures and response plans in place prior to the initiation of research activities at the proposed NBAF.

Socioeconomics

Construction activities at all sites would result in between 1,300 and 1,614 temporary jobs generating between $138.2 million and $183.9 million in labor income and between $12.5 million and $24.7 million in state and local taxes. Population, housing, and quality of life would not be affected by construction. Operation of the NBAF would result in 250 to 350 direct jobs and an estimated income of between $26.8 million and $30.4 million annually. Population growth due to the NBAF would be a small portion of the estimated growth in the regions surrounding all sites. The effect of the NBAF on the housing market and quality of life (i.e., schools, law enforcement, fire protection, medical facilities, recreation, and health and safety) would be negligible. Law enforcement and fire protection personnel could be trained by DHS to respond to incidents at the NBAF.

The risk of an accidental release of a pathogen is extremely low, but the economic effect could be substantial for all sites. The primary economic effect of an accidental release of FMD virus would be the banning of exports of U.S. livestock products regardless of the location of the accidental release, which could reach as high as $4.2 billion until the U.S. was declared foot and mouth disease (FMD) free. Response measures to minimize risks and quickly contain any accidental release would greatly reduce the potential economic loss.

Traffic and Transportation

Local traffic at all sites would be temporarily affected by general construction traffic. Operation of the NBAF would result in only minor increases in daily traffic on roads near all the sites except for roads near the Umstead Research Farm Site (Range Road and Old Route 75), which are not heavily used by local traffic and would experience a 140% increase in average daily traffic. Transportation of research materials would not significantly increase the risk of a traffic-related incident.

Existing Hazardous, Toxic, and Radiological Waste

Recent investigations at the Umstead Research Farm Site indicate that the potential for unexploded materials from past military training is low. The Plum Island Site was previously used to dispose of military materials but has been remediated (cleaned up) and should not be a safety concern for workers. Training for construction workers for either of these sites may be required prior to initiation of construction activities to ensure worker safety. None of the other sites would require remediation or additional considerations for the protection of workers, the public, or the environment.

Waste Management

Waste generation and management would be similar for all sites, although the amount of wastewater would vary somewhat for each site based on total water use. Wastewater discharged by the NBAF would be pretreated as required to meet all local wastewater permit and acceptance requirements, as previously described. Construction would generate construction debris, sanitary solid waste, and wastewater. Operation of the NBAF would result in generation of wastewater, waste solids, and medical, hazardous, and industrial solid wastes.

Health and Safety

The effects of the NBAF on health and safety due to construction and normal operations would be similar for all sites. Standard safety protocols would minimize the likelihood of accidents and personal injury at the NBAF, and normal operations pose no threat to the surrounding communities. An evaluation was conducted to determine the potential for an accidental or intentional (criminal or terrorist) release of a pathogen from the NBAF and the potential for the pathogen to spread from each site alternative. The evaluation considered the accident scenarios with and without measures to prevent and contain a release. The hazard analysis concluded that the likelihood of a release of a pathogen was extremely low, given appropriate attention to the design, construction and operation of the NBAF with the array of safety controls, including a robust facility that is capable of withstanding the various analyzed accident conditions. For all sites the risk of accidental release was independent of where the facility was located. The site specific consequences were shown to be essentially the same between the sites located on the mainland and were slightly lower for the Plum Island Site, due in part to there being less opportunity for the pathogen to become established and spread.

Environmental Justice

No disproportionately high adverse effects to minority or low-income populations were evident at any of the site alternatives. Visual effects and traffic increases due to construction would be minimized with proper site management protocols. Potential traffic effects would be minimized by limiting road closures and rerouting traffic. Economic benefits would potentially occur to low income or minority populations within the area due to a rise in construction-related jobs.

VI. The Environmentally Preferred Alternative

The environmentally preferred alternative is the alternative that causes the least impact to the environment; it is also the alternative that best protects, preserves, and enhances historic, cultural, and natural resources as noted by the CEQ, in its ''Forty Most Asked Questions Concerning CEQ's NEPA Regulations'' (46 FR 18026, dated March 23, 1981), with regard to 40 CFR 1505.2. Under the No Action Alternative, continued operation of the PIADC

would have little or no incremental environmental impacts, except for minor and temporary effects from construction of ongoing infrastructure upgrades. Therefore, DHS has identified the No Action Alternative as the environmentally preferred alternative, because it would have the least environmental impact in the short term. However, the No Action Alternative does not satisfy the purpose of and need for the Proposed Action and associated mission drivers.

The NBAF EIS indicated that there would be very little difference in environmental impacts among the site alternatives. There would be impacts from construction of the NBAF over the short term and from subsequent normal facility operations at all sites. The major discriminator identified would be associated with a release of a pathogen where the potential impact would be slightly less at the Plum Island Site. This is due to both the water barrier around the island and the absence of nearby livestock and susceptible wildlife species. Regardless, the probability of a release is very low at all sites.

Over the longer term, construction and subsequent operations of the NBAF at any of the site alternatives would have potential beneficial effects to wildlife, because the work performed at the NBAF could result in development of vaccines or new diagnostic tools to protect or contain outbreaks of foreign animal diseases.

VII. Comments on the NBAF Final EIS

Approximately 3,000 copies of the NBAF Final EIS and/or NBAF Final EIS Executive Summary were distributed in hard copy or on compact disk to members of Congress and other elected officials; Federal, state, and local government agencies; Native American representatives; public interest groups; public reading rooms; and to individuals. In addition, both the NBAF Final EIS and the Executive Summary are available online at *http://www.dhs.gov/nbaf* and on request.

Following the release of the NBAF Final EIS, DHS received letters and other correspondence from approximately 60 commentors, including government agencies, elected officials, organizations, and individuals.

• An internal DHS comment was received from the Federal Emergency Management Agency (FEMA) Region IV expressing concerns about the approach in the NBAF EIS to evaluating flood risks at the alternative sites. FEMA suggested that DHS evaluate flood risks at the Preferred Alternative site in greater detail and directed DHS to the Peer Review Plan, Manhattan, Kansas Levee—Section 216 Flood Risk Management Project Feasibility Study (dated January 2008).

DHS notes that the document concerning the feasibility study of the existing Manhattan, Kansas Levee flood risk management project being conducted by the U.S. Army Corps of Engineers Kansas City District is intended to update and verify data on the level of flood risk management provided by the project. DHS is aware of the project, and the NBAF Final EIS acknowledges the flood risk considerations associated with the 1993 flood along the Big Blue and Kansas Rivers. Further, DHS responded to a number of comments on the NBAF Draft EIS relating to concerns about the failure of the Tuttle Creek Dam from natural phenomena and other events. The NBAF would be designed and built to meet or exceed all applicable building codes and to include design provisions sufficient to withstand the effects of site-specific natural phenomena events, including flooding.

• The State of Mississippi cited perceived errors in the NBAF Final EIS and in DHS's *Preferred Alternative Selection Memorandum* (dated December 2008) concerning evaluation of the Flora Industrial Park Site with regard to its proximity to research capabilities, ample workforce, and level of community acceptance as compared with other alternative sites, including the Preferred Alternative site. The State provided DHS with information about the collaborative university research and veterinary programs that comprise the Gulf States Bio and Agro-Defense Consortium along with Battelle Memorial Institute, the presence of four BSL–3 laboratories in the Jackson metropolitan area, development of the state's high-technology and manufacturing employment business sectors and associated workforce, among other information. They also noted statements made by the DHS Under Secretary for Science and Technology relative to the strength afforded to the Gulf States Bio and Agro-Defense Consortium's NBAF proposal by the participation of Battelle. The State asked that the NBAF Final EIS be amended to correct the cited inaccuracies relative to the Flora Industrial Park Site.

DHS acknowledges the additional information provided by the State of Mississippi relative to research capabilities and workforce availability in Mississippi and, specifically, in the greater Jackson area. DHS further acknowledges exceptionally strong community support for the Flora Industrial Site, as well as unwavering support by all levels of the State's government throughout this process. This information has been carefully considered by DHS. In the DHS *Final Selection Memorandum for Site Selection for the Second Round Potential Sites for the National Bio and Agro-Defense Facility (NBAF)* (dated July 2007), the Flora, Mississippi site was included as a site alternative, because Battelle's participation in the consortium provided additional benefits that had not been initially considered by the evaluation committees. However, as part of the Preferred Alternative selection process, the Steering Committee again reassessed previous ratings that included Battelle's capabilities and determined that ratings of ''Does Not Meet Overall Criteria'' were appropriate for the Proximity to Research and Workforce criteria. As discussed in Part I of this ROD, DHS emphasizes that the Proximity to Research and Workforce ratings apply exclusively to the specific research and workforce needs of the proposed NBAF facility, and are not a general statement on the research capability and workforce expertise in Mississippi or other proposing States. DHS continues to believe that the consortium offered a highly innovative proposal that included Battelle. Battelle was fully committed to the consortium and offered a partnership with experts that would benefit the NBAF in Mississippi until such time that a local workforce with expertise in research and biocontainment facilities relevant to the NBAF mission could be developed. However, given the immediacy of the need and the highly competitive package of existing assets offered by the Preferred Alternative, the Manhattan Campus Site in Kansas remained the best alternative of all the strong candidates.

• The Gulf States Bio and Agro-Defense Consortium commented that the text found in the NBAF Final EIS did not match the findings presented in Table ES–3 ''Comparison of Environmental Effects'' of the NBAF Final EIS.

Section 3.13.6.3 of the NBAF EIS discusses the cumulative impacts in Madison County due to several public and private activities proposed or ongoing that would have potential to impact resources. DHS originally used this analysis to apply the ''moderate'' rating in the ''cumulative effects'' category in Table ES–3 ''Comparison of Environmental Effects'' of the NBAF Final EIS. Upon further analysis of the data, DHS acknowledges that this rating is subject to interpretation and could be changed to ''minor.'' DHS reaffirms that

the NBAF EIS offered very little differentiation among the sites. The Flora Industrial Park Site was given the highest overall EIS rating of ''no to minor environmental impacts'' by the Steering Committee. The changes do not affect the outcome of the decision process by the Steering Committee or the Decision Authority.

• The Greater Jackson Chapter Partnership, submitted comments on behalf of the Gulf States Bio and Agro-Defense Consortium, in which they commented on the selection of the Manhattan Campus Site as the Preferred Alternative and expressed concerns about the evaluation process for selecting the Preferred Alternative. Comments submitted were similar to those submitted by the State of Mississippi. They also cited the differences in costs between the Flora Industrial Park Site and the Manhattan Campus Site as presented in the NBAF Final EIS; they questioned how numerical differences in costs could receive the same qualitative rating by DHS.

DHS shares concerns about costs in a time of fiscal uncertainty for the Nation. As discussed in the *Preferred Alternative Selection Memorandum,* DHS evaluated the total life-cycle costs of the alternatives and carefully weighed the cost differences among the alternatives in selecting a Preferred Alternative site. The Steering Committee's review indicated that the offsets to infrastructure costs and ''in-kind'' contributions offered by the Heartland BioAgro Consortium, including immediate and long-term use of the existing Biosecurity Research Institute at KSU, resulted in the Manhattan Campus Site being rated among the least expensive sites at which to construct and operate the NBAF when all factors were considered.

• U.S. Senator Thad Cochran of Mississippi expressed his support for the comments submitted by the Gulf States Bio and Agro-Defense Consortium regarding DHS's selection of the Preferred Alternative. Senator Cochran also articulated concerns regarding information in the DHS *Preferred Alternative Selection Memorandum,* dated December 2008, and in the NBAF Final EIS analysis of the costs associated with building at the site alternatives. Specifically, Senator Cochran expressed concerns about statements regarding the estimated costs of building the NBAF at the Manhattan, Kansas site and at the Flora, Mississippi site. He noted that the NBAF Final EIS cites a cost savings of $65,011,459 if NBAF were built at the Flora, Mississippi site rather than the Manhattan, Kansas site. Senator Cochran also questioned how ''in-kind'' contributions were factored into the cost analysis, noting his understanding that the in-kind pledges offered by Mississippi and Kansas were approximately equal in value, especially when total life-cycle costs of the alternatives are considered.

As previously discussed, DHS did consider the total life-cycle costs of the alternatives in selecting a Preferred Alternative. Both the Gulf States Bio and Agro-Defense Consortium and Heartland BioAgro Consortium offered in-kind contribution packages that completely offset estimated site development costs and both received the highest marks for this criterion. Additionally, the Heartland BioAgro Consortium's offer of the immediate and long-term use of the existing Biosecurity Research Institute, a Biosafety Level 3 facility within close proximity to the Manhattan Campus Site in which research on pathogens threatening large livestock is conducted, was a very attractive in-kind contribution which would further offset the cost of locating the NBAF at the Manhattan Campus Site. It is also important to note that the life-cycle cost of constructing the NBAF was only one aspect of the evaluation criteria considered in the final decision. As discussed in the *Preferred Alternative Selection Memorandum* and in this ROD, other evaluation criteria were considered and provided distinguishing factors.

• Congressman Bennie Thompson of Mississippi expressed support for the NBAF, while also expressing concern regarding the site selection process. He asked that DHS weigh more heavily the possible effects of a pathogen release at each site, rather than relying solely on the tenet that the risk of release is independent of site location. The Congressman observed that there is precedent for placing national laboratories in rural areas and noted that remote and rural locations provide an additional layer of security and reduced risk. Congressman Thompson also expressed concerns about perceived negative references by DHS to Mississippi's and the Jackson area's research capabilities and workforce and urged DHS to amend the NBAF Final EIS for accuracy.

DHS has evaluated the possible effects of a pathogen release at each site in the NBAF EIS and commissioned the *Threat and Risk Assessment* separate from the NBAF EIS. The NBAF Steering Committee, as discussed in the *Preferred Alternative Selection Memorandum,* determined that the risk of release of any pathogen proposed for study at the NBAF could be mitigated by implementation of operational protocols, rigid security measures, and adherence to U.S. biosecurity guidelines. From the perspective of economic consequences should a release of FMDV occur, it was determined that the major impact would be loss of meat export trade status regardless of the site, and that the government's response to an FMD outbreak is the most critical factor regardless where it occurs. Consequently, DHS determined that it was most important to select a location for the proposed NBAF that would optimize the capability to diagnose and cure large animal diseases. Regarding the comments on perceived negative ratings, DHS again notes that site evaluations apply exclusively to the specific research and workforce needs of the proposed NBAF facility, and are not a general statement on the research capability and workforce availability in Mississippi. DHS acknowledges that the consortium offered a highly innovative package in its partnership with Battelle and the strengths of many of the surrounding schools in Mississippi. However, the selected site was able to best meet the immediate need of the research and workforce requirements of the NBAF mission.

• The office of Congressman Tim Bishop of New York suggested consideration of an alternative to keep PIADC in its current BSL–3Ag state while placing the proposed NBAF BSL–4 elsewhere.

This option was considered by DHS, but it was not analyzed as a separate alternative, because the environmental impacts were already considered within the range of reasonable alternatives analyzed in the NBAF EIS. When analyzing this option against DHS's purpose and need for action, DHS concluded that it would not provide enhanced capabilities to detect and prevent threats to animal agriculture. Additionally, the practical consequences of splitting the NBAF laboratory functions would produce a fractured workforce, result in decreased efficiencies and increased costs and was found to not meet the purpose and need as stated in the NBAF EIS. Therefore, DHS considered but did not select the option of building a BSL–4 only laboratory and leaving PIADC in its current state.

• The Texas Bio and Agro-Defense Consortium (TBAC) submitted comments expressing several areas of concern regarding the analysis in the NBAF Final EIS and the selection of the Manhattan Campus Site as the Preferred Alterative for the siting, construction, and operation of the NBAF. TBAC's

comments were endorsed in a letter submitted by the State of Texas. Their concerns focused on the following issues: (1) The site evaluation criteria; (2) the cost analysis in the EIS; (3) risks posed by certain environmental impacts; and (4) the site selection process.

TBAC commented that DHS erred in its evaluation of Texas research capabilities, construction costs, workforce, and community acceptance criteria. They asserted that DHS erred in its evaluation of construction costs at the various sites, and that additional financing requirements were unreasonably added in an untimely manner. They expressed concern regarding the perceived failure of the EIS to adequately consider risks and environmental impacts, specifically the risk of a release of hazardous substances due to naturally-occurring events such as tornadoes. TBAC commented on several aspects of the DHS site selection procedures such as initial and subsequent ratings and requests from DHS for supplemental information.

DHS does not agree with TBAC's assertion that the NBAF Final EIS is flawed because the EIS failed to consider the evaluation criteria. DHS did consider the evaluation criteria to establish the range of reasonable alternatives analyzed in the EIS. Any further use of the evaluation criteria in the EIS is not necessary and is not required by CEQ's regulations for implementing NEPA (40 Code of Federal Regulation Parts 1500 *et seq.*). CEQ regulations state that an EIS ''* * * shall provide full and fair discussion of significant environmental impacts and shall inform decision makers and the public of the reasonable alternatives * * * An environmental impact statement is more than a disclosure document. It shall be used by Federal officials in conjunction with other relevant material to plan actions and make decisions (40 CFR 1502.1).'' DHS believes that the NBAF Final EIS has been prepared in full compliance with NEPA and CEQ regulations.

DHS's four evaluation criteria, associated sub-criteria, and preferences were used, in part, to assist DHS in the selection of reasonable alternatives for analysis in the NBAF EIS and in selection of a Preferred Alternative. TBAC asserted that DHS unfairly added additional financing requirements to the process. As discussed under Part I of this ROD (*Site Selection Process and Evaluation Criteria*), DHS communicated its initial criteria, sub-criteria, and preferences throughout the process. One of the initial sub-criteria and then a DHS preference, communicated to the consortia in DHS's December 8, 2006 letter, was for ''in-kind'' contributions to assist DHS in the completion of this project. As discussed previously, DHS sent the consortia a letter dated February 29, 2008 requesting verification of their final offers by the due date of March 31, 2008. TBAC submitted the verification of its final offer by March 31, 2008. The State of Texas then sent a letter on September 26, 2008 to DHS stating they would use their ''best efforts to secure appropriation of not less than the additional $56.3 million from the state funding sources best suited to meet the NBAF's project timeline.'' DHS responded to this letter stating ''in order to maintain the fairness and integrity of DHS's NBAF Decision Process, the additional $56.3 million cannot be considered by the Steering Committee because it is not a clarification of the previous offer.'' While DHS maintains that this additional offer could not be considered, it is notable that even if the additional Texas financial offsets of the September 26, 2008 letter had been included, the Manhattan Campus Site would still be the site offering best value to the Government.

TBAC stated that the NBAF EIS failed to assess risks and impacts of releases resulting from natural phenomena, specifically tornadoes, and asked that DHS reevaluate the release threat from tornado activity. The NBAF Final EIS adequately evaluates the risks and impacts from tornadoes and natural phenomena at all the alternative sites. DHS received numerous comments from individuals and organizations regarding the risks posed to NBAF by natural phenomena hazards such as tornadoes, earthquakes, hurricanes, etc at the Manhattan Campus Site and the other site alternatives. DHS has responded to these comments in the NBAF Final EIS Comment Response Document. As previously stated in this ROD, the NBAF would be designed to withstand normal meteorological conditions as well as the effects of severe weather events, including tornadoes and would meet or exceed the wind load standards of the International Building Code, American Society of Civil Engineers Standard No. 7, Minimum Design Loads for Buildings and Other Structures, and the codes of the local jurisdiction, which take into account the use of the facility as a laboratory.

TBAC also questioned the conclusion in the NBAF EIS that noise effects would be similar for all sites and asserted that the noise analysis and conclusions dismissed the fact that the Texas Research Park is located in an unpopulated area. Section 3.5 of the NBAF EIS begins by describing the methodology for evaluating potential impacts and then describes the acoustic environment for each site followed by an assessment of potential impacts. For the Texas Research Park Site, it is noted that it is ''* * *currently located in a rural, undeveloped area west of San Antonio but has been designated as a future industrial and research park site. There are no known sensitive noise receptors at the site'' (see Section 3.5.8.1 of the NBAF Final EIS). The EIS clearly acknowledges the current acoustic environment of Texas Research Park Site. As further described in the methodology section of the NBAF Final EIS, the noise analysis evaluated noise-generating sources at each site to assess potential audible effects from facility construction and operation. The overall conclusion was that noise was not an environmental impact discriminator and, therefore, all sites received the same qualitative rating of ''minor'' as presented in the Executive Summary to the NBAF Final EIS.

Finally, TBAC commented that the text found in the NBAF Final EIS did not match the findings presented in Table ES–3 ''Comparison of Environmental Effects'' of the NBAF Final EIS. Table ES–3 is based on the affected environment and consequence analysis presented in Chapter 3 of the NBAF Final EIS and could be perceived as open to interpretation. Specifically, a commentor to the NBAF Draft EIS identified a conflict between the text in Section 3.11.8.3.1 that indicated minor effects to traffic at the Texas Research Park Site, while Table ES–3 in the Executive Summary indicated a moderate effect. The comment response document stated that the ''Moderate'' would be changed to the correct listing of ''Minor'' as is detailed in Section 3.11.8.3.1 of the NBAF EIS. DHS did not make this modification in the table as the response indicated. DHS acknowledges that both the ''traffic and transportation'' and ''cumulative effects'' category for the Texas Research Park Site could be changed to ''Minor'' and is subject to interpretation. DHS again notes that the NBAF EIS offered very little differentiation among the sites. The Texas Research Park Site was given the highest overall EIS rating of ''no to minor environmental impacts'' by the Steering Committee. The changes do not affect the outcome of the decision process by the Steering Committee or the Decision Authority.

- A majority of the comments received on the NBAF Final EIS expressed opposition to the selection of the Preferred Alternative and expressed concerns such as the following:

• A pathogenic release due to accidents, natural phenomena such as tornadoes, and terrorist actions;

• Risks from FMD virus research on the U.S. mainland or in any areas with livestock populations;

• Economic and human health effects of a pathogen release on local and national livestock industry, ranchers, and farmers;

• The NBAF site and surrounding community becoming terrorist targets;

• The absence in the NBAF EIS of adequate analysis of physical isolation and water barrier afforded at the Plum Island Site.

These concerns were addressed by DHS in the responses to comments on the NBAF Draft EIS and in the NBAF Final EIS. Many of the same commentors who expressed opposition to the Preferred Alternative also suggested that instead of construction of the NBAF, DHS should upgrade the existing PIADC on Plum Island, New York.

Commentors are referred to the NBAF Final EIS and associated Comment Response Document (Appendix H of the NBAF Final EIS) for information on these issues and DHS's responses to individual comments.

• Mrs. Susan Hodges reported that her letter dated August 25, 2008 and submitted to oppose the selection of the South Milledge Avenue Site was not included in the NBAF Final EIS Comment Response Document, although her name was listed. DHS regrets this error. Mrs. Hodges' letter was one of a small number of comment documents that were postmarked before the end of the comment period (August 25, 2008), but were not delivered to the NBAF Program Office in time for publication in the Comment Response Document. However, DHS did consider these comments and posted the comments and responses on the NBAF Web site as part of Comment Response Document.

DHS considered all comments received on the NBAF Final EIS during the preparation of the ROD. However, in reviewing and balancing the comments received against the decision factors considered in this ROD, DHS determined that no substantially new, relevant information was identified. Therefore, DHS has not changed its view regarding the Preferred Alternative as presented in the NBAF Final EIS and in this ROD.

VIII. Decision Factors

Analysis of the Alternative Sites

As previously described, a DHS Steering Committee reviewed new and emerging data relevant to the original site evaluation criteria (*i.e.*, Proximity to Research Capabilities, Proximity to Workforce, Acquisition/Construction/Operations (ACO) Requirements, and Community Acceptance) for selection of the Preferred Alternative. These same criteria had been utilized by DHS to identify the five site alternatives that were analyzed in the NBAF EIS in addition to the Plum Island Site. DHS emphasizes that the Proximity to Research Capabilities and Workforce criteria apply exclusively to the specific research and workforce needs of the proposed NBAF and are not a general statement on the research capability and workforce expertise of the proposing states and consortia. Using the new and emerging data contained in supporting documents, the Steering Committee reevaluated the strengths and weaknesses of each site relative to the initial site ratings as documented in the *Final Selection Memorandum for Site Selection for the Second Round Sites for the NBAF,* dated July 2007, and the *Plum Island Memorandum for the Record,* dated November 2008, with the objective of updating the site ratings relative to the four evaluation criteria. The Steering Committee also considered the results of the NBAF Final EIS, including the public comments made at the public meetings and by other means during the 60-day public comment period on the NBAF Draft EIS.

Overall EIS and Threat and Risk Assessment Results

As discussed in more detail in Part III (Preferred Alternative) of this ROD, DHS determined that the NBAF EIS and the *Threat and Risk Assessment* presented very little differentiation among the sites. In fact, the NBAF EIS determined that the risk of release of a biological pathogen from the NBAF was independent of where the NBAF was located. DHS also determined that, based on its review of the NBAF EIS, the likelihood of a release of a pathogen was very low, given appropriate attention to the design, construction, and operation of the NBAF with an array of safety controls. Finally, DHS determined that the risk of release of any identified pathogen proposed for study within the NBAF could be mitigated by implementation of operational protocols, rigid security measures, and adherence to the U.S. Government biosecurity guidelines.

With respect to the economic consequence if a release were to happen, the Steering Committee found that the major impact of a release was due to the loss of meat export trade status and that this is independent of the site of the NBAF. As excerpted more fully in Part III (Preferred Alternative) of this ROD, the letter DHS received from Dr. Bernard Vallat, Director General of The World Organization for Animal Health (OIE), in which Dr. Vallat stated that the trade status impact of an outbreak of foot and mouth disease (FMD) virus in a country is ''more related to how the country's authorities respond to the incursion, rather than where the outbreak occurs'' was particularly informative.

DHS determined that, based on the lack of differentiation among the sites regarding the risk of a release and the economic consequences of a release, that it was most important to select a location that would optimize the capability to diagnose and cure large animal diseases through strong research programs and expedient diagnostic and response capabilities. Furthermore, DHS found that the environmental impacts analyzed in the EIS and the site specific threats were all very similar and that there were only minor differentiators in the EIS and the *Threat and Risk Assessment*. Therefore, the key differentiators among the sites were DHS's original initial four evaluation criteria. Because the NBAF is intended to be the Nation's preeminent research facility for foreign animal and zoonotic disease research, the site's proximity to research capabilities that can be linked to NBAF mission requirements was emphasized among the four evaluation criteria.

South Milledge Avenue Site; Athens, Georgia

While the South Milledge Avenue Site demonstrated numerous strengths against the evaluation criteria, DHS found that it did not best meet the purpose and need to site, construct, and operate the NBAF based on the Research, Workforce, ACO, and Community Acceptance criteria. This site offers proximity to world class capabilities across disciplines related to the NBAF and collectively there is significant expertise in research on infectious diseases and pathogenesis of animals and humans, as well as zoonoses. However, there is no clear evidence of integration with the biomedical research community and the research focus tends to be on poultry which is not related to the NBAF large livestock animal disease mission. It is attractive that the area is rich in high containment laboratory building expertise. Additionally, the Emory BSL3/4 laboratories and Athens Community College offered training programs for NBAF workers. The EIS demonstrated that for the South Milledge Avenue Site, almost all

environmental impacts fell in the ''no impacts to minor impacts'' category. However, the NBAF EIS stated the site may require an amendment to the Athens-Clarke County Comprehensive Plan based on the current planned use for the area where it is located. The rating for the ACO criterion was further weakened because the offset package offered by the consortium offset only a small percentage of the project cost. The site continued to experience strong Federal level, state, and local political support. However, a well organized, vocal opposition group expressed numerous concerns on siting the NBAF in Athens, Georgia. Additionally, numerous negative comments about the project were received at public meetings. The information presented in the *Threat and Risk Assessment* was found to be comparable to the other site alternatives. Based on the lack of proximity to NBAF related research and workforce in comparison to the Preferred Alternative, the active community opposition, and the lack of a competitive offset package, DHS did not select the South Milledge Avenue Site as the Preferred Alternative for implementation.

Manhattan Campus Site, Manhattan, Kansas (Preferred Alternative)

Based on the numerous strengths that were evident when evaluating the Manhattan Campus Site against the evaluation criteria, DHS found that this location best met the purpose and need to site, construct and operate the NBAF. Specifically, the site location near KSU provides site proximity to existing research capabilities that can be linked to NBAF mission requirements. Additionally, the site's proximity to the KSU College of Veterinary Medicine, KSU College of Agriculture, and the Biosecurity Research Institute is relevant to the NBAF mission and a significant strength. The EIS demonstrated that construction and operation of the NBAF at the Manhattan Campus Site would be environmentally acceptable as almost all environmental impacts fell into the ''no impacts to minor impacts'' category. As stated in the EIS and agreed to by the Steering Committee, the risk of release of a pathogen was independent of where the NBAF was located. The information presented in the *Threat and Risk Assessment* was found to be comparable to the other site alternatives. The Manhattan Campus Site alternative demonstrated very strong community acceptance from local, state, and Federal officials and stakeholders. Additionally, the consortium offered a substantial, unconditional offset package, including use of the existing Biosecurity Research Institute. Taking into consideration the offsets to infrastructure costs and ''in-kind'' contributions offered by the consortia, the Manhattan Campus Site is among the least expensive locations to construct and operate the NBAF. Following a comparison of this site to the No Action alternative, DHS selected this site alternative as the Preferred Alternative for implementation.

Flora Industrial Park Site; Flora, Mississippi

While the Flora Industrial Park Site demonstrated numerous strengths against the evaluation criteria, DHS found that it did not best meet the purpose and need to site, construct, and operate the NBAF based on the Research and Workforce criteria. DHS concluded that the Mississippi consortium's inclusion of Battelle would not offset the Flora Industrial Park Site's lack of proximity to a critical mass of NBAF related research institutions, such as the lack of a veterinary school and other research entities that could be linked to NBAF mission requirements. While Battelle has strong in-house training programs for laboratories and animal research and would assist in bringing these training programs and expertise to NBAF, this strength does not overcome the lack of an established nearby university or research institution with related mission areas nor the lack of nearby BSL–3 laboratory with related mission areas. The Flora, Mississippi site was included as a site alternative, because Battelle's participation in the consortium provided additional and unique benefits. However, as part of the Preferred Alternative selection process, the Steering Committee again reassessed previous ratings that included Battelle's capabilities and determined that this model did not overcome the previously noted concerns. DHS notes that these ratings apply exclusively to the specific research and workforce needs of the proposed NBAF, and are not a general statement on the research capability and workforce expertise in Mississippi. Battelle was fully committed to the consortium and offered a partnership with experts that would benefit the NBAF in Mississippi until such time that a local workforce with expertise in research and biocontainment facilities relevant to the NBAF mission could be developed. However, given the immediacy of the need, DHS concluded that the lack of existing research and workforce assets within proximity to the site and relevant to the NBAF mission was a weakness. Additionally, the Flora Industrial Park Site demonstrated exceptionally strong community acceptance from local, state, and Federal officials and stakeholders. Further, the consortium offered an offset package that covered a significant portion of the project cost and made this site one of the least expensive upon which to build. The EIS demonstrated that for the Flora Industrial Park Site, almost all environmental impacts fell in the ''no impacts to minor impacts'' category. The information presented in the *Threat and Risk Assessment* was found to be comparable to the other site alternatives. However, based on the lack of proximity to NBAF related research and workforce in comparison to the Preferred Alternative, DHS did not select the Flora Industrial Park Site as the Preferred Alternative for implementation.

Plum Island Site; Plum Island, New York

While the Plum Island Site demonstrated numerous strengths against the evaluation criteria, DHS found that it did not best meet the purpose and need to site, construct, and operate the NBAF based on the Research, Workforce, ACO, and Community Acceptance criteria. DHS concluded that even though the existing PIADC has demonstrated the ability to effectively carry out its Foreign Animal Disease (FAD) research mission, the research is focused primarily on FMDV (compared to the broader NBAF research mission requirements) and there is a lack of proximity to medical and veterinary schools as well as BSL–3/4 laboratories with related mission areas. While the current PIADC staff has experience with large animal research, there would still need to be a significant amount of training for working in BSL–4 spaces. Additionally, even though there would be a lower cost and risk to relocate research programs from the PIADC facility to the NBAF, if the NBAF were to be constructed on Plum Island, these cost savings would be overshadowed by the much higher construction cost at the Plum Island Site. There is strong political opposition at Federal, state, and local levels to having BSL–4 research on Plum Island. The EIS demonstrated that for the Plum Island Site almost all environmental impacts fell in the ''no impacts to minor impacts'' category. The information presented in the *Threat and Risk Assessment* was found to be comparable to the other site alternatives. Additionally, in November 2008, the World Organization for Animal Health (OIE) stated that, a FMD virus outbreak on an island would be considered no different from an FMDV outbreak on the mainland with respect to the impact

such an outbreak would have on the Nation's meat-export trade status and that, therefore, it was most important to optimize the facility to diagnose and cure large animal diseases. Accordingly, based on the lack of proximity to NBAF related research and workforce in comparison to the Preferred Alternative, the local public and political opposition to a BSL–4 laboratory on Plum Island, and the significant cost to build and operate on Plum Island, DHS did not select the Plum Island Site as the Preferred Alternative for implementation.

Umstead Research Farm Site; Butner, North Carolina

While the Umstead Research Farm Site demonstrated numerous strengths against the evaluation criteria, DHS found that it did not best meet the purpose and need to site, construct, and operate the NBAF based on the ACO and Community Acceptance criteria. A significant strength is the critical mass of intellectual and scientific capital (comprised of universities, the private sector, and pharmaceutical and biotechnology companies) all within proximity to the site and that can be linked to NBAF mission requirements. Three area universities (Duke University, University of North Carolina, and North Carolina State University) offer significant opportunities to draw and train a skilled workforce. Additionally, the biomanufacturing firms and biotechnology research and development programs within the area, coupled with 24 BSL–3's, provide a strong base for a skilled workforce. However, the Umstead Research Farm Site experienced strong local opposition to the NBAF with limited Federal, state, and stakeholder support. The well-organized and vocal opposition group to the NBAF grew to such a level that some federal and state level representatives withdrew their original support for the project. Additionally, numerous negative comments about the project were received at public meetings. The North Carolina rating was not competitive for the ACO criterion because the North Carolina consortium offered minimal offsets to site costs. The EIS demonstrated that for the Umstead Research Farm Site almost all environmental impacts fell in the ''no impacts to minor impacts'' category. The information presented in the *Threat and Risk Assessment* was found to be comparable to the other site alternatives. However, based on the concern for the active community opposition in addition to the limited Federal, state, and local political support and the lack of a competitive offset package, DHS did not select the Umstead Research Farm Site as the Preferred Alternative for implementation.

Texas Research Park Site; San Antonio, Texas

While the Texas Research Park Site demonstrated numerous strengths against the evaluation criteria, DHS found that it did not best meet the purpose and need to site, construct, and operate the NBAF based on the Research and ACO criteria. While a strength is the site's proximity to other research entities, such as a BSL–4 laboratory and several BSL–3 laboratories, which could foster research collaboration, this strength is tempered by the fact that no Veterinary School or College of Agriculture is nearby. Site proximity to workforce is a strength, as there is a strong military veterinary infrastructure which possesses significant worldwide experience with exotic animal diseases. The Texas Research Park Site also demonstrated very strong community acceptance from local, state, and Federal officials and stakeholders. However, the rating for the ACO criterion was not as strong or competitive as the Manhattan Campus Site. While the Texas consortium offered a very good offset package, only a small percentage of this package was unconditional and could be used as a direct offset to the project cost. The EIS demonstrated construction and operation of the NBAF at the Texas Research Park Site would be environmentally acceptable as the impacts fell in the ''no impacts to minor impacts'' category. Finally, the information presented in the *Threat and Risk Assessment* was found to be comparable to the other site alternatives. Therefore, based on the site's lack of proximity to a Veterinary School or College of Agriculture and the lack of a competitive offset package, DHS did not select the Texas Research Park Site as the Preferred Alternative for implementation.

IX. Decision

DHS has considered environmental impacts, public comments on the NBAF Draft EIS and the Final EIS, national policy, evaluation criteria, threat and risk assessments, costs, site characterizations, security, and other programmatic requirements in its decision to site, construct, and operate the NBAF in Manhattan, Kansas. It is also noted that the NBAF Final EIS's risk assessment of FMDV impacts to the mainland allowed for full public and stakeholder participation. Upon consultation with the Secretaries of Homeland Security and Agriculture, the Decision Authority (Under Secretary Cohen) accepted the unanimous recommendation of the Steering Committee and selected Manhattan, Kansas as the site for the NBAF. DHS has therefore decided, in consultation with USDA, to implement its Preferred Alternative to construct and operate the NBAF at the Manhattan Campus Site in Kansas. DHS determined that the Manhattan Campus Site offers the best benefit to the Government based upon the evaluation criteria and DHS preferences and, most importantly, meets the intended purpose and need to safely and successfully site, construct, and operate the NBAF. DHS would also initiate the transition of mission activities and resources from the Plum Island Animal Disease Center (PIADC), located on Plum Island, New York to the Manhattan Campus Site, including research related to FMD. DHS anticipates that construction of NBAF would begin in fiscal year 2010 with completion by the end of 2014.

X. Mitigation

As identified in Section 3.15 of the NBAF Final EIS and as summarized, where appropriate, in this ROD, DHS would implement specific mitigation measures in the design, construction, and operation of the NBAF. These include appropriate pollution control and best management practices during construction so as to minimize adverse impacts to the environment and to incorporate architectural design features, biocontainment technologies, operational procedures, training and protocols, and waste management technologies and procedures to minimize environmental impacts during routine operations. The NBAF would be designed and constructed to emphasize strategies for sustainable site development, water savings, energy efficiency, material selection, and indoor environmental quality to include measures consistent with the low-impact design (LID) approach. To minimize potential impacts in the unlikely event of a release, DHS would have site-specific standard operating procedures and response plans in place prior to the initiation of research activities at the NBAF. Additionally, DHS intends, where applicable, to consider the recommendations of the Government Accountability Office (GAO) on perimeter security found in the September 2008 Report to Congressional Committees entitled *Biosafety Laboratories: Perimeter Security Assessment of the Nation's Five BSL–4 Laboratories.* Upon review of the site specific *Threat and Risk Assessment,* to be developed during the

design phase, DHS will implement a comprehensive risk-based physical and personnel security program for the NBAF.

All practicable and economically feasible means to avoid or minimize environmental harm from the selected alternative have been adopted and would, as applicable, be incorporated into the design of the NBAF. The mitigation measures described in Section 3.15 of the NBAF EIS are incorporated into this ROD and are considered part of the selected alternative.

Authority: 42 U.S.C. 4321–4347 (National Environmental Policy Act).

Dated: January 12, 2009.

Jay M. Cohen,

Under Secretary, Science & Technology, DHS.

[FR Doc. E9–914 Filed 1–15–09; 8:45 am]

BILLING CODE 4410–10–P

DEPARTMENT OF HOMELAND SECURITY

Office of the Secretary

[Docket No. DHS–2009–0022]

DHS Data Privacy and Integrity Advisory Committee

AGENCY: Privacy Office, DHS.

ACTION: Committee Management; Notice of Open Teleconference Federal Advisory Committee Meeting.

SUMMARY: The DHS Data Privacy and Integrity Advisory Committee will meet by teleconference on February 3, 2009.

DATES: The teleconference call will take place on Tuesday, February 3, 2009, from 1 p.m. to 2 p.m. Eastern Standard Time.

ADDRESSES: Members of the public are welcome to listen to the meeting by calling (800) 320–4330 and entering Pin Number 215132. The number of teleconference lines is limited, however, and lines will be available on a first-come, first-served basis. Requests to have written material distributed to each member of the Committee prior to the meeting should reach Martha K. Landesberg, Executive Director, at the address below by January 29, 2009. Comments must include the Docket Number (DHS–2009–0022) and may be submitted by one of the following methods:

- *Federal eRulemaking Portal: http://www.regulations.gov.* Follow the instructions for submitting comments.
- *E-mail: PrivacyCommittee@dhs.gov.* Include the docket number in the subject line of the message.
- *Fax:* (703) 483–2999
- *Mail:* Martha K. Landesberg, Executive Director, Data Privacy and Integrity Advisory Committee, Department of Homeland Security, 20528.

Instructions: All submissions received must include the words ''Department of Homeland Security Data Privacy and Integrity Advisory Committee'' and the Docket Number: DHS–2009–0022. Comments received will also be posted without alteration at *http://www.regulations.gov,* including any personal information provided.

Docket: For access to the docket to read background documents or comments received by the DHS Data Privacy and Integrity Advisory Committee, go to *http://www.regulations.gov.*

FOR FURTHER INFORMATION CONTACT: Martha K. Landesberg, Executive Director, Data Privacy and Integrity Advisory Committee, Department of Homeland Security, Washington, DC 20528, by telephone (703) 235–0780, by fax (703) 235–0442, or by e-mail *PrivacyCommittee@dhs.gov.*

SUPPLEMENTARY INFORMATION: Notice of this meeting is given under the Federal Advisory Committee Act, 5 U.S.C. App. (Pub. L. 92–463). During the meeting, the DHS Data Privacy and Integrity Advisory Committee will deliberate and vote on a proposed letter to the new Secretary of Homeland Security and DHS Chief Privacy Officer outlining the Committee's recommendations on privacy issues and priorities for the Department. The Committee will discuss these matters from approximately 1 p.m. to 2 p.m. Eastern Standard Time on Tuesday, February 3, 2009. The Chairperson of the Committee shall conduct the teleconference in a way that will, in his judgment, facilitate the orderly conduct of business. Please note that the teleconference may end early if all business is completed.

If you wish to submit written materials to be distributed to each member of the Committee in advance of the meeting, please submit them, preferably in electronic form to facilitate distribution, to Martha K. Landesberg, Executive Director, by January 29, 2009.

Information on Services for Individuals With Disabilities

For information on services for individuals with disabilities or to request special assistance, contact Martha K. Landesberg, Executive Director, as soon as possible.

Dated: January 8, 2009.

John Kropf,

Deputy Chief Privacy Officer, Department of Homeland Security.

[FR Doc. E9–826 Filed 1–15–09; 8:45 am]

BILLING CODE 4410–10–P

DEPARTMENT OF HOMELAND SECURITY

Office of the Secretary

Privacy Act of 1974; System of Records

AGENCY: Privacy Office, DHS.

ACTION: Notice of removal of one Privacy Act system of records notice.

SUMMARY: In accordance with the Privacy Act of 1974, the Department of Homeland Security is giving notice that it will remove one system of records notice from its inventory of record systems because Immigration and Customs Enforcement no longer requires the system. The obsolete system is: Treasury/CS.186 Personnel Search System.

DATES: *Effective Date:* February 17, 2009.

FOR FURTHER INFORMATION CONTACT: Hugo Teufel III, Chief Privacy Officer, Department of Homeland Security, Washington, DC 20528, by telephone (703) 235–0780 or facsimile (703) 483–2999.

SUPPLEMENTARY INFORMATION: Pursuant to the provisions of the Privacy Act of 1974, 5 U.S.C. 552a, and as part of its ongoing integration and management efforts, the Department of Homeland Security (DHS) is removing one Immigration and Customs Enforcement (ICE) system of records notice from its inventory of record systems.

DHS inherited this record system upon its creation in January of 2003. Upon review of its inventory of record systems, DHS has determined it no longer needs or uses this system of records and is retiring Treasury/CS.186 Personnel Search System (66 FR 52984 October 18, 2001).

Treasury/CS.186 Personnel Search System (66 FR 52984 October 18, 2001) was originally established to collect and maintain records on individuals indicating unlawful or suspicious activity that might result in a Customs violation.

Eliminating this system of records notices will have no adverse impact on individuals, but will promote the overall streamlining and management of DHS Privacy Act record systems.

Dated: December 22, 2008.

Hugo Teufel III,

Chief Privacy Officer, Department of Homeland Security.

[FR Doc. E9–933 Filed 1–15–09; 8:45 am]

BILLING CODE 4410–10–P

DEPARTMENT OF HOMELAND SECURITY

Office of the Secretary

[Docket No. DHS–2008–0118]

Privacy Act of 1974; Department of Homeland Security—024 Facility and Perimeter Access Control and Visitor Management System of Records

AGENCY: Privacy Office; DHS.

ACTION: Notice of Privacy Act system of records.

SUMMARY: In accordance with the Privacy Act of 1974 and as part of the Department of Homeland Security's ongoing effort to review and update legacy system of record notices, the Department of Homeland Security proposes to consolidate into a new Department of Homeland Security system of records notice titled, DHS/All—024 Facility and Perimeter Access Control and Visitor Management System of Records: Treasury/CS.081 Dock Passes, October 18, 2001, Justice/INS–014 Security Access Control System, January 22, 2001, and to partially consolidate DHS/OS–001 Office of Security File System, September 12, 2006, and FEMA/SEC–1 Security Support System, September 7, 1990. Categories of individuals, categories of records, and the routine uses of this legacy system have been reviewed and updated to better reflect the Department's facility and perimeter access control and visitor management record system. Additionally, the Department of Homeland Security is issuing a Notice of Proposed Rulemaking concurrent with this system of records elsewhere in the **Federal Register**. The activities performed by the Department's Facility and Perimeter Access Control and Visitor Management systems often overlap with other security-related activities. Accordingly, data within each of the categories of individuals, categories of records, and routine uses may have similarities with other security-related systems of records, but each system is distinct based on its purpose. Further, this system of records is separate from DHS-OS–2006–047 Personal Identify Verification Management System which supports the administration of the HSPD–12 program that directs the use of a common identification credential for both logical and physical access to federally controlled facilities and information systems while enhancing security, increasing efficiency, identifying and reducing fraud, and protecting personally identifiable information.

Records within this system apply only to perimeters and facilities where access is controlled by the Department of Homeland Security. This system of records does not apply to (1) facilities where the Department's components or offices have a presence but where the General Services Administration has an established contract for security services or (2) facilities where Immigration and Custom Enforcement's Federal Protective Service provides oversight on the contract.

Exclusion is made to perimeters and facilities secured by the United States Secret Service pursuant to 18 U.S.C. 3056 and 3056A and are not included under this system of records. This consolidated system will be included in the DHS inventory of record systems.

DATES: Written comments must be submitted on or before February 17, 2009. This new system will be effective February 17, 2009.

ADDRESSES: You may submit comments, identified by docket number DHS–2008–0118 by one of the following methods:

- *Federal e-Rulemaking Portal: http://www.regulations.gov*. Follow the instructions for submitting comments.
- *Fax*: 703–483–2999.
- *Mail*: Hugo Teufel III, Chief Privacy Officer, Privacy Office, Department of Homeland Security, Washington, D.C. 20528.
- *Instructions*: All submissions received must include the agency name and docket number for this rulemaking. All comments received will be posted without change and may be read at *http://www.regulations.gov*, including any personal information provided.
- *Docket*: For access to the docket to read background documents or comments received, go to *http://www.regulations.gov*.

FOR FURTHER INFORMATION CONTACT: For general questions and privacy issues please contact: Hugo Teufel III (703–235–0780), Chief Privacy Officer, Privacy Office, Department of Homeland Security, Washington, DC 20528.

SUPPLEMENTARY INFORMATION:

I. Background

Pursuant to the savings clause in the Homeland Security Act of 2002, Public Law 107–296, Section 1512, 116 Stat. 2310 (November 25, 2002), the Department of Homeland Security (DHS) and its components and offices have relied on preexisting Privacy Act systems of records notices for the collection and maintenance of records that pertain to facility and perimeter access control and visitor management.

As part of its efforts to streamline and consolidate its Privacy Act record systems, DHS is establishing a new agency-wide system of records under the Privacy Act (5 U.S.C. 552a) for DHS facility and perimeter access control and visitor management records. The facility and perimeter access control and visitor management system of records is the baseline system for facility and perimeter access control and visitor management, as led by the DHS Office of the Chief Security Officer. This will ensure that all components of DHS follow the same privacy rules for collecting and handling access control and visitor management records.

In accordance with the Privacy Act of 1974 and as part of the Department of Homeland Security's ongoing effort to review and update legacy system of record notices, the Department of Homeland Security proposes to consolidate Treasury/CS.081 Dock Passes, October 18, 2001, Justice/INS–014 Security Access Control System, January 22, 2001, and to partially consolidate DHS/OS–001 Office of Security File System, September 12, 2006, and FEMA/SEC–1 Security Support System (55 FR 37182), into a new Department of Homeland Security system of records notice titled, DHS/All—024 Facility and Perimeter Access Control and Visitor Management System of Records. Categories of individuals, categories of records, and the routine uses of this legacy system have been reviewed and updated to better reflect the Department's facility and perimeter access control and visitor management record system.

The activities performed by the Department's Facility and Perimeter Access Control and Visitor Management systems often overlap with other security-related activities. Accordingly, data within each of the categories of individuals, categories of records, and routine uses may have similarities with other security-related systems of records, but each system is distinct based on its purpose.

Records within this system apply only to perimeters and facilities where access is controlled by the Department of Homeland Security. This system of records does not apply to (1) facilities where the Department's components or offices have a presence but where the General Services Administration has an established contract for security services

or (2) facilities where Immigration and Custom Enforcement's Federal Protective Service provides oversight on the contract.

Further, this system of records is separate from DHS–OS–2006–047 Personal Identify Verification Management System which supports the administration of the HSPD–12 program that directs the use of a common identification credential for both logical and physical access to federally controlled facilities and information systems while enhancing security, increasing efficiency, identifying and reducing fraud, and protecting personally identifiable information.

Additionally, the Department of Homeland Security is issuing a Notice of Proposed Rulemaking concurrent with this system of records elsewhere in the **Federal Register**. Exclusion is made to perimeters and facilities secured by the United States Secret Service pursuant to 18 U.S.C. 3056 and 3056A and are not included under this system of records. This consolidated system will be included in the DHS inventory of record systems.

II. Privacy Act

The Privacy Act embodies fair information principles in a statutory framework governing the means by which the United States Government collects, maintains, uses and disseminates individual's records. The Privacy Act applies to information that is maintained in a ''system of records.'' A ''system of records'' is a group of any records under the control of an agency from which information is stored and retrieved by the name of the individual or by some identifying number such as property address, mailing address, or symbol assigned to the individual. In the Privacy Act, an individual is defined to encompass United States citizens and lawful permanent residents. DHS extends administrative Privacy Act protections to all individuals where information is maintained on both U.S. citizens, lawful permanent residents, and visitors. Individuals may request their own records that are maintained in a system of records in the possession or under the control of DHS by complying with DHS Privacy Act regulations, 6 CFR 5.21.

The Privacy Act requires each agency to publish in the **Federal Register** a description denoting the type and character of each system of records that the agency maintains, and the routine uses that are contained in each system in order to make agency record keeping practices transparent, to notify individuals regarding the uses of their records, and to assist individuals to more easily find such files within the agency. Below is a description of the Visitor Management and Access Control System of Records.

In accordance with 5 U.S.C. 552a(r), DHS has provided a report of this new system of records to the Office of Management and Budget (OMB) and to Congress.

SYSTEM OF RECORDS:

DHS/ALL–024.

SYSTEM NAME:

Department of Homeland Security—024 Facility and Perimeter Access Control and Visitor Management System of Records

SECURITY CLASSIFICATION:

Unclassified, sensitive, for official use only, and classified.

SYSTEM LOCATION:

Records are maintained at several Headquarters locations and in component offices of the Department of Homeland Security, in both Washington, D.C. and field locations.

CATEGORIES OF INDIVIDUALS COVERED BY THE SYSTEM:

Categories of individuals covered by this system include: (1) Any employee, contractor, consultant, intern, fellow, or others with regular access and an access control pass which grants unescorted access to a DHS facility or information technology system and any visitor to a DHS facility; (2) violators of DHS access or perimeter control; (3) applicants for employment, contractors, or those needing unescorted access to DHS facilities or information technology systems; (4) State and local government personnel and private-sector individuals who serve on an advisory committee and board sponsored by DHS; (5) individuals, including State and local government personnel and private-sector individuals, who are authorized by DHS to access Departmental facilities, including classified facilities, communications security equipment, and information technology systems that process national or homeland security classified information; (6) individuals accused of security violations or found in violation.

CATEGORIES OF RECORDS IN THE SYSTEM:

Categories of records covered by this system include:

- Individual's full name;
- Organization's name;
- Social security number;
- Date of birth;
- Citizenship;
- Country of origin, if applicable;
- Telephone number;
- Physical descriptions;
- Biometric information;
- Photograph;
- Visitor badge number, if applicable;
- Date and time of entry and departure;
- Driver's license and other form of identification information;
- License plate number and state of issuance;
- Make and model of vehicle;
- Reports, files, records received from other Federal agencies;
- Records relating to management and operation of DHS programs to safeguard classified and sensitive but unclassified information, including but not limited to:
  - Document control registries;
  - Courier authorization requests;
  - Non-disclosure agreements;
  - Records of security violations;
  - Records of document transmittals; and
  - Requests for secure storage and communications equipment.
- Records relating to the management and operation of the DHS security program, including but not limited to:
  - Inquiries relating to suspected security violation(s);
  - Recommended remedial actions for possible security violation(s);
  - Reports of investigation regarding security violations;
  - Statements of individuals;
  - Affidavits; and
  - Correspondence.
- Records relating to the management and operation of the Office of Security's facility and perimeter access control and visitor management system including but not limited to:
  - Facility and perimeter access registries;
  - Courier cards;
  - Access control card requests; and
  - Specific information from standard DHS forms used to conduct criminal history record checks; and
  - Closed circuit television (CCTV) systems and recordings.

AUTHORITY FOR MAINTENANCE OF THE SYSTEM:

5 U.S.C. 301; the Federal Records Act, 6 U.S.C., the Homeland Security Act; 44 U.S.C. 3101; and Executive Order 9397; Executive Order 12968, Federal Property Regulations, issued July 2002.

PURPOSE(S):

The purpose of this system is to maintain records associated with DHS facility and perimeter access control, including access to DHS Information Technology and access to classified facilities, as well as visitor management.

ROUTINE USES OF RECORDS MAINTAINED IN THE SYSTEM, INCLUDING CATEGORIES OF USERS AND THE PURPOSES OF SUCH USES:

In addition to those disclosures generally permitted under 5 U.S.C. 552a(b) of the Privacy Act, all or a portion of the records of information contained in this system may be disclosed outside DHS as a routine use pursuant to 5 U.S.C. 552a(b)(3) as follows:

A. To the Department of Justice (including United States Attorney Offices) or other Federal agency conducting litigation or in proceedings before any court, adjudicative or administrative body when it is necessary to the litigation and one of the following is a party to the litigation or has an interest in such litigation:

1. DHS or any component thereof;

2. Any employee of DHS in his/her official capacity;

3. Any employee of DHS in his/her individual capacity where DOJ or DHS has agreed to represent the employee; or

4. The United States or any agency thereof, is a party to the litigation or has an interest in such litigation, and DHS determines that the records are both relevant and necessary to the litigation and the use of such records is compatible with the purpose for which DHS collected the records.

B. To a congressional office from the record of an individual in response to an inquiry from that congressional office made at the written request of the individual to whom the record pertains.

C. To the National Archives and Records Administration or other Federal government agencies pursuant to records management inspections being conducted under the authority of 44 U.S.C. 2904 and 2906.

D. To an agency, organization, or individual for the purpose of performing audit or oversight operations as authorized by law, but only such information as is necessary and relevant to such audit or oversight function.

E. To appropriate agencies, entities, and persons when:

1. DHS suspects or has confirmed that the security or confidentiality of information in the system of records has been compromised;

2. The Department has determined that as a result of the suspected or confirmed compromise there is a risk of harm to economic or property interests, identity theft or fraud, or harm to the security or integrity of this system or other systems or programs (whether maintained by DHS or another agency or entity) or harm to the individual who relies upon the compromised information; and

3. The disclosure made to such agencies, entities, and persons is reasonably necessary to assist in connection with DHS's efforts to respond to the suspected or confirmed compromise and prevent, minimize, or remedy such harm.

F. To contractors and their agents, grantees, experts, consultants, and others performing or working on a contract, service, grant, cooperative agreement, or other assignment for DHS, when necessary to accomplish an agency function related to this system of records. Individuals provided information under this routine use are subject to the same Privacy Act requirements and limitations on disclosure as are applicable to DHS officers and employees.

G. To an appropriate Federal, State, tribal, local, international, or foreign law enforcement agency or other appropriate authority charged with investigating or prosecuting a violation or enforcing or implementing a law, rule, regulation, or order, where a record, either on its face or in conjunction with other information, indicates a violation or potential violation of law, which includes criminal, civil, or regulatory violations and such disclosure is proper and consistent with the official duties of the person making the disclosure.

H. To an appropriate Federal, State, local, tribal, foreign, or international agency or contract provider, if the information is relevant and necessary to a requesting agency's decision concerning the hiring or retention of an individual, or issuance of a security clearance, license, contract, grant, or other benefit, or if the information is relevant and necessary to a DHS decision concerning the hiring or retention of an employee or contractor, the issuance of a security clearance, the reporting of an investigation of an employee or contractor, the letting of a contract, or the issuance of a license, grant or other benefit and disclosure is appropriate to the proper performance of the official duties of the person making the request.

I. To a public or professional licensing organization when such information indicates, either by itself or in combination with other information, a violation or potential violation of professional standards, or reflects on the moral, educational, or professional qualifications of an individual who is licensed or who is seeking to become licensed.

J. To the news media and the public, with the approval of the Chief Privacy Officer in consultation with counsel, when there exists a legitimate public interest in the disclosure of the information or when disclosure is necessary to preserve confidence in the integrity of DHS or is necessary to demonstrate the accountability of DHS's officers, employees, or individuals covered by the system, except to the extent it is determined that release of the specific information in the context of a particular case would constitute an unwarranted invasion of personal privacy.

DISCLOSURE TO CONSUMER REPORTING AGENCIES:

None.

POLICIES AND PRACTICES FOR STORING, RETRIEVING, ACCESSING, RETAINING, AND DISPOSING OF RECORDS IN THE SYSTEM:

STORAGE:

Records in this system are stored electronically or on paper in secure facilities in a locked drawer behind a locked door. The records are stored on servers, magnetic disc, tape, digital media, and CD–ROM.

RETRIEVABILITY:

Records may be retrieved by individual name, date of birth, and social security number, if applicable.

SAFEGUARDS:

Records in this system are safeguarded in accordance with applicable rules and policies, including all applicable DHS automated systems security and access policies. Strict controls have been imposed to minimize risk of compromising the information that is being stored. Access to the computer system containing the records in this system is limited to those individuals who have a need to know the information for the performance of their official duties and who have appropriate clearances or permissions.

RETENTION AND DISPOSAL:

Pursuant to GRS 18, Item 22a personnel security clearance files are destroyed upon notification of death or not later than five years after separation or transfer of employee or no later than five years after contract relationship expires, whichever is applicable.

Pursuant to GRS 18, Item 6 requests and authorizations for individuals to have access to classified files are destroyed two years after authorization expires.

Pursuant to GRS 11, Item 4a identification credentials including cards, badges, parking permits, photographs, agency permits to operate motor vehicles, and property, dining room and visitors passes, and other identification credentials are destroyed credentials three months after return to issuing office.

Pursuant to GRS 18, Item 17 registers or logs used to record names of outside contractors, service personnel, visitors, employees admitted to areas, and reports on automobiles and passengers for areas under maximum security are destroyed five years after final entry or five years after date of document, as appropriate.

Other documents pursuant to GRS 18, Item 17b are destroyed two years after final entry or two years after date of document, as appropriate.

Where records are used as evidence in an investigation or in an administrative, litigation, or other proceeding, the records will be retained until final disposition of the investigation or proceeding.

SYSTEM MANAGER AND ADDRESS:

For Headquarters components of DHS, the System Manager is the Director of Departmental Disclosure, Department of Homeland Security, Washington, DC 20528. For components of DHS, the System Manager can be found at *http://www.dhs.gov/foia* under ''contacts.''

NOTIFICATION PROCEDURE:

Individuals seeking notification of and access to any record contained in this system of records, or seeking to contest its content, may submit a request in writing to the Headquarters or component's FOIA Officer, whose contact information can be found at *http://www.dhs.gov/foia* under ''contacts.'' If an individual believes more than one component maintains Privacy Act records concerning him or her, the individual may submit the request to the Chief Privacy Officer, Department of Homeland Security, 245 Murray Drive, SW., Building 410, STOP–0550, Washington, DC 20528.

When seeking records about yourself from this system of records or any other Departmental, system of records your request must conform with the Privacy Act regulations set forth in 6 CFR part 5. You must first verify your identity, meaning that you must provide your full name, current address and date and place of birth. You must sign your request, and your signature must either be notarized or submitted under 28 U.S.C. 1746, a law that permits statements to be made under penalty of perjury as a substitute for notarization. While no specific form is required, you may obtain forms for this purpose from the Director, Disclosure and FOIA, *http://www.dhs.gov* or 1–866–431–0486. In addition, you should provide the following:

- An explanation of why you believe the Department would have information on you,
- Identify which component(s) of the Department you believe may have the information about you,
- Specify when you believe the records would have been created,
- Provide any other information that will help the FOIA staff determine which DHS component agency may have responsive records,
- If your request is seeking records pertaining to another living individual, you must include a statement from that individual certifying his/her agreement for you to access his/her records.

Without this bulleted information the component(s) may not be able to conduct an effective search, and your request may be denied due to lack of specificity or lack of compliance with applicable regulations.

RECORD ACCESS PROCEDURES:

See ''Notification procedure'' above.

CONTESTING RECORD PROCEDURES:

See ''Notification procedure'' above.

RECORD SOURCE CATEGORIES:

Records are generated from sources contacted during visits to Department facilities.

EXEMPTIONS CLAIMED FOR THE SYSTEM:

The Secretary of Homeland Security has exempted this system from subsections (c)(3), (d), (e)(1), (e)(4)(G), (H), (I), and (f) of the Privacy Act pursuant to 5 U.S.C. 552a (k)(1), (k)(2), and (k)(5) of the Privacy Act.

Dated: December 22, 2008.

Hugo Teufel III,

Chief Privacy Officer, Department of Homeland Security.

[FR Doc. E9–928 Filed 1–15–09; 8:45 am]

BILLING CODE 4410–10–P

DEPARTMENT OF HOMELAND SECURITY

Office of the Secretary

[Docket No. DHS–2008–0120]

Privacy Act of 1974; Department of Homeland Security—023 Personnel Security Management System of Records

AGENCY: Privacy Office; DHS.

ACTION: Notice of Privacy Act system of records.

SUMMARY: In accordance with the Privacy Act of 1974 and as part of the Department of Homeland Security's ongoing effort to review and update system of records notices, the Department of Homeland Security proposes to consolidate into a new Department of Homeland Security system of records notice titled, Personnel Security Management System of Records: Treasury/CS.270 Background-Record File of Non-Customs Employees, Treasury/CS.284 Personnel Verification System, and DOT/CG 611 Investigative Case System, and partially consolidate DHS/OS–001 Office of Security File System and FEMA/SEC–1 Security Support System. Categories of individuals, categories of records, and the routine uses of these legacy systems have been reviewed and updated to better reflect the Department's personnel security management record system. Additionally, the Department of Homeland Security is issuing a Notice of Proposed Rulemaking concurrent with this system of records elsewhere in the **Federal Register**. The activities performed by the Department's Personnel Security program often overlap with other security-related activities such as access control and investigatory records. Accordingly, data within each of the categories of individuals, categories of records, and routine uses may have similarities with other security-related systems of records, but each system is distinct based on its purpose. This consolidated system will be included in the Department of Homeland Security's inventory of record systems.

DATES: Written comments must be submitted on or before February 17, 2009. This new system will be effective February 17, 2009.

ADDRESSES: You may submit comments, identified by docket number DHS–2008–0120 by one of the following methods:

- *Federal e-Rulemaking Portal: http://www.regulations.gov.* Follow the instructions for submitting comments.
- *Fax:* 703–483–2999.
- *Mail:* Hugo Teufel III, Chief Privacy Officer, Privacy Office, Department of Homeland Security, Washington, DC 20528.
- *Instructions:* All submissions received must include the agency name and docket number for this rulemaking. All comments received will be posted without change and may be read at *http://www.regulations.gov,* including any personal information provided.
- Docket: For access to the docket to read background documents or comments received, go to *http://www.regulations.gov.*

FOR FURTHER INFORMATION CONTACT: For general questions and privacy issues

please contact: Hugo Teufel III (703–235–0780), Chief Privacy Officer, Privacy Office, Department of Homeland Security, Washington, DC 20528.

SUPPLEMENTARY INFORMATION:

I. Background

Pursuant to the savings clause in the Homeland Security Act of 2002, Public Law 107–296, section 1512, 116 Stat. 2310 (November 25, 2002), the Department of Homeland Security (DHS) and its components and offices have relied on preexisting Privacy Act systems of records notices for the collection and maintenance of records that pertain to personnel security management.

As part of its efforts to streamline and consolidate its Privacy Act record systems, DHS is establishing a new agency-wide system of records under the Privacy Act (5 U.S.C. 552a) for DHS personnel security management records. The Personnel Security Management system of records is the baseline system for personnel security activities, as led by the DHS Office of the Chief Security Officer, for the Department. This will ensure that all DHS components follow the same privacy rules for collecting and handling personnel security management records.

In accordance with the Privacy Act of 1974 and as part of DHS's ongoing effort to review and update system of records notices, DHS proposes to consolidate into a new DHS system of records notice titled, DHS/All—023 Personnel Security Management System of Records: Treasury/CS.270 Background-Record File of Non-Customs Employees (66 FR 52984 October 18, 2001), and Treasury/CS.284 Personnel Verification System (66 FR 52984 October 18, 2001), and partially consolidate DHS/OS–001 Office of Security File System (71 FR 53700 September 12, 2006) and FEMA/SEC–1 Security Support System (55 FR 37182 September 7, 1990). Categories of individuals, categories of records, and the routine uses of these legacy systems have been reviewed and updated to better reflect the Department's personnel security management record system. Additionally, the Department of Homeland Security is issuing a Notice of Proposed Rulemaking concurrent with this system of records elsewhere in the **Federal Register**. The activities performed by the Department's Personnel Security program often overlap with other security-related activities such as access control and investigatory records. Accordingly, data within each of the categories of individuals, categories of records, and routine uses may have similarities with other security-related systems of records, but each system is distinct based on its purpose.

The purpose of this system is to maintain processing records of personnel security-related clearance actions; to record suitability determinations; security clearances issued or denied; and to verify eligibility for access to classified information or assignment to a sensitive position. Also, records may be used by the Department for adverse personnel actions such as removal from sensitive duties, removal from employment, and denial to a restricted or sensitive area, and revocation of security clearance. The system also assists in capturing background investigations and adjudications; directing the clearance process for granting, suspending, revoking and denying access to classified information; managing state, local and private sector clearance programs and contractor suitability programs; determining eligibility for unescorted access to DHS facilities or information technology systems; and other activities relating to personnel security management responsibilities at DHS.

The Office of the Chief Security Officer is currently implementing a new web-based personnel and information security application, Integrated Security Management System (ISMS). ISMS will replace the existing case management system currently in use for Customs and Border Protection, Federal Law Enforcement Training Center, Immigration and Customs Enforcement, and Federal Emergency Management Agency.

Further, this system of records is separate from DHS–OS–2006–047 Personal Identity Verification Management System (71 FR 53697 September 12, 2006), which supports the administration of the HSPD–12 program that directs the use of a common identification credential for both logical and physical access to federally controlled facilities and information systems while enhancing security, increasing efficiency, reducing identify fraud, and protecting personal privacy. This consolidated system will be included in DHS's inventory of record systems.

II. Privacy Act

The Privacy Act embodies fair information principles in a statutory framework governing the means by which the United States Government collects, maintains, uses and disseminates individual's records. The Privacy Act applies to information that is maintained in a ''system of records.'' A ''system of records'' is a group of any records under the control of an agency from which information is stored and retrieved by the name of the individual or by some identifying number such as property address, mailing address, or symbol assigned to the individual. In the Privacy Act, an individual is defined to encompass United States citizens and lawful permanent residents. DHS extends administrative Privacy Act protections to all individuals where information is maintained on both U.S. citizens, lawful permanent residents, and visitors. Individuals may request their own records that are maintained in a system of records in the possession or under the control of DHS by complying with DHS Privacy Act regulations, 6 CFR part 5.

The Privacy Act requires each agency to publish in the **Federal Register** a description denoting the type and character of each system of records that the agency maintains, and the routine uses that are contained in each system in order to make agency record keeping practices transparent, to notify individuals regarding the uses of their records, and to assist individuals to more easily find such files within the agency. Below is a description of the Personnel Security Management System of Records.

In accordance with 5 U.S.C. 552a(r), DHS has provided a report of this new system of records to the Office of Management and Budget (OMB) and to Congress.

SYSTEM OF RECORDS:

DHS/ALL–023.

SYSTEM NAME:

Department of Homeland Security—023 Personnel Security Management System of Records.

SECURITY CLASSIFICATION:

Unclassified, sensitive, and classified.

SYSTEM LOCATION:

Records are maintained at several Headquarters locations and in component offices of the Department of Homeland Security, in Washington, DC, field locations, and the Department of Treasury, Bureau of Public Debt for Office of Inspector General employees and applicants. For background investigations adjudicated by the Office of Personnel Management (OPM), OPM may retain copies of those files, pursuant to their records retention schedules.

CATEGORIES OF INDIVIDUALS COVERED BY THE SYSTEM:

Categories of individuals covered by this system include DHS covered individuals (*e.g.*, federal employees,

applicants, excepted service federal employees, contractor employees, retired employees, and past employees) providing support to DHS and who require unescorted access to DHS-owned facilities, DHS-controlled facilities, or commercial facilities operating on behalf of DHS; access to DHS information technology (IT) systems and the systems' data; or access to national security information including classified information.

Also covered are State and local government personnel and private sector individuals who serve on an advisory committee or board sponsored by DHS; individuals, including State and local government personnel and private-sector individuals, who are authorized by DHS to access Departmental facilities, communications security equipment, and information technology systems that process sensitive or classified national security information.

CATEGORIES OF RECORDS IN THE SYSTEM:

Categories of records include:

- Individual's name;
- Social security number;
- Date and place of birth;
- Citizenship;
- Access Control Pass or Credential number
- Records relating to the management and operation of DHS personnel security program, including but not limited to:
  - ○ Completed standard form questionnaires issued by the Office of Personnel Management;
  - ○ Originals or copies of background investigative reports;
  - ○ Supporting documentation related to the background investigations and adjudications including medical and financial data;
  - ○ Information related to congressional inquiry; and
  - ○ Other information relating to an individual's eligibility for access to classified or sensitive information.
- Records relating to management and operation of DHS programs to safeguard classified and sensitive but unclassified information, including but not limited to:
  - ○ Document control registries;
  - ○ Courier authorization requests;
  - ○ Non-disclosure agreements;
  - ○ Records of security violations;
  - ○ Records of document transmittals; and
  - ○ Requests for secure storage and communications equipment.
- Records relating to the management and operation of DHS special security programs, including but not limited to:
  - ○ Requests for access to sensitive compartmented information (SCI);
  - ○ Contact with foreign officials and foreign travel registries; and
  - ○ Briefing/debriefing statements for special programs, sensitive positions, and other related information and documents required in connection with personnel security clearance determinations.
- Records relating to the management and operation of the DHS security program, including but not limited to:
  - ○ Inquiries relating to suspected security violation(s);
  - ○ Recommended remedial actions for possible security violation(s);
  - ○ Reports of investigation regarding security violations;
  - ○ Statements of individuals;
  - ○ Affidavits;
  - ○ Correspondence;
  - ○ Documentation pertaining to investigative or analytical efforts by DHS Security program personnel to identify threats to DHS personnel, property, facilities, and information; and
  - ○ Intelligence reports and database results relating to DHS personnel, applicants, or candidates for DHS employment or access to DHS facilities or information

AUTHORITY FOR MAINTENANCE OF THE SYSTEM:

5 U.S.C. 301; the Federal Records Act, 44 U.S.C. 3101; Executive Order (EO) 9397; EO 10450; EO 12968, 5 CFR part 731; 5 CFR part 732; 5 CFR part 736; 32 CFR part 147; and DCID 6/4.

PURPOSE(S):

The purpose of this system is to maintain records of processing of personnel security-related clearance actions; to record suitability determinations; security clearances issued or denied; and to verify eligibility for access to classified information or assignment to a sensitive position. Also, records may be used by the Department for adverse personnel actions such as removal from sensitive duties, removal from employment, or denial to a restricted or sensitive area, and revocation of security clearance. The system also assists in capturing background investigations and adjudications; directing the clearance process for granting, suspending, revoking and denying access to classified information; managing state, local and private sector clearance programs and contractor suitability programs; determining eligibility for unescorted access to DHS facilities or information technology systems; and other activities relating to personnel security management responsibilities at DHS.

ROUTINE USES OF RECORDS MAINTAINED IN THE SYSTEM, INCLUDING CATEGORIES OF USERS AND THE PURPOSES OF SUCH USES:

In addition to those disclosures generally permitted under 5 U.S.C. 552a(b) of the Privacy Act, all or a portion of the records of information contained in this system may be disclosed outside DHS as a routine use pursuant to 5 U.S.C. 552a(b)(3) as follows:

A. To the Department of Justice (including United States Attorney Offices) or other Federal agency conducting litigation or in proceedings before any court, adjudicative or administrative body when it is necessary to the litigation and one of the following is a party to the litigation or has an interest in such litigation:

1. DHS or any component thereof;

2. Any employee of DHS in his/her official capacity;

3. Any employee of DHS in his/her individual capacity where DOJ or DHS has agreed to represent the employee; or

4. The United States or any agency thereof, is a party to the litigation or has an interest in such litigation, and DHS determines that the records are both relevant and necessary to the litigation and the use of such records is compatible with the purpose for which DHS collected the records.

B. To a congressional office from the record of an individual in response to an inquiry from that congressional office made at the written request of the individual to whom the record pertains.

C. To the National Archives and Records Administration or other Federal government agencies pursuant to records management inspections being conducted under the authority of 44 U.S.C. 2904 and 2906.

D. To an agency, organization, or individual for the purpose of performing audit or oversight operations as authorized by law, but only such information as is necessary and relevant to such audit or oversight function.

E. To appropriate agencies, entities, and persons when:

1. DHS suspects or has confirmed that the security or confidentiality of information in the system of records has been compromised;

2. The Department has determined that as a result of the suspected or confirmed compromise there is a risk of harm to economic or property interests, identity theft or fraud, or harm to the security or integrity of this system or other systems or programs (whether maintained by DHS or another agency or entity) or harm to the individual who relies upon the compromised information; and

3. The disclosure made to such agencies, entities, and persons is reasonably necessary to assist in connection with DHS's efforts to respond to the suspected or confirmed compromise and prevent, minimize, or remedy such harm.

F. To contractors and their agents, grantees, experts, consultants, and others performing or working on a contract, service, grant, cooperative agreement, or other assignment for DHS, when necessary to accomplish an agency function related to this system of records. Individuals provided information under this routine use are subject to the same Privacy Act requirements and limitations on disclosure as are applicable to DHS officers and employees.

G. To an appropriate Federal, State, tribal, local, international, or foreign law enforcement agency or other appropriate authority charged with investigating or prosecuting a violation or enforcing or implementing a law, rule, regulation, or order, where a record, either on its face or in conjunction with other information, indicates a violation or potential violation of law, which includes criminal, civil, or regulatory violations and such disclosure is proper and consistent with the official duties of the person making the disclosure.

H. To an appropriate Federal, State, local, tribal, foreign, or international agency, if the information is relevant and necessary to a requesting agency's decision concerning the hiring or retention of an individual, or issuance of a security clearance, license, contract, grant, or other benefit, or if the information is relevant and necessary to a DHS decision concerning the hiring or retention of an employee, the issuance of a security clearance, the reporting of an investigation of an employee, the letting of a contract, or the issuance of a license, grant or other benefit and disclosure is appropriate to the proper performance of the official duties of the person making the request.

I. To an individual's prospective or current employer to the extent necessary to determine employment eligibility.

J. To a court, magistrate, or administrative tribunal in the course of presenting evidence, including disclosures to opposing counsel or witnesses in the course of civil discovery, litigation, or settlement negotiations or in connection with criminal law proceedings or pursuant to the order of a court of competent jurisdiction in response to a subpoena from a court of competent jurisdiction.

K. To third parties during the course of a law enforcement investigation to the extent necessary to obtain information pertinent to the investigation, provided disclosure is appropriate to the proper performance of the official duties of the officer making the disclosure.

L. To a public or professional licensing organization when such information indicates, either by itself or in combination with other information, a violation or potential violation of professional standards, or reflects on the moral, educational, or professional qualifications of an individual who is licensed or who is seeking to become licensed.

DISCLOSURE TO CONSUMER REPORTING AGENCIES:

None.

POLICIES AND PRACTICES FOR STORING, RETRIEVING, ACCESSING, RETAINING, AND DISPOSING OF RECORDS IN THE SYSTEM:

STORAGE:

Records in this system are stored electronically or on paper in secure facilities in a locked drawer behind a locked door. The records are stored on servers, magnetic disc, tape, digital media, and CD–ROM.

RETRIEVABILITY:

Records may be retrieved by individual's name, date of birth, social security number, if applicable or other unique individual identifier, e.g., access control pass or credential number.

SAFEGUARDS:

Records in this system are safeguarded in accordance with applicable rules and policies, including all applicable DHS automated systems security and access policies. Strict controls have been imposed to minimize risk of compromising the information that is being stored. Access to the computer system containing the records in this system is limited to those individuals who have a need to know the information for the performance of their official duties and who have appropriate clearances or permissions.

RETENTION AND DISPOSAL:

Pursuant to GRS 18, Item 21 through 25, records relating to alleged security violations are destroyed two years after completion of final action or when no longer needed, whichever is sooner; records relating to alleged violations of a sufficient serious nature that are referred for prosecutive determinations are destroyed five years after the close of the case; personnel security clearance files are destroyed upon notification of death or not later than five years after separation or transfer of employee or no later than five years after contract relationship expires, whichever is applicable.

SYSTEM MANAGER AND ADDRESS:

For Headquarters components of DHS, the System Manager is the Director of Departmental Disclosure, Department of Homeland Security, Washington, DC 20528. For components of DHS, the System Manager can be found at *http://www.dhs.gov/foia* under ''contacts.''

NOTIFICATION PROCEDURE:

Individuals seeking notification of and access to any record contained in this system of records, or seeking to contest its content, may submit a request in writing to the Headquarters or component's FOIA Officer, whose contact information can be found at *http://www.dhs.gov/foia* under ''contacts.'' If an individual believes more than one component maintains Privacy Act records concerning him or her the individual may submit the request to the Chief Privacy Officer, Department of Homeland Security, 245 Murray Drive, SW., Building 410, STOP–0550, Washington, DC 20528.

When seeking records about yourself from this system of records or any other Departmental system of records your request must conform with the Privacy Act regulations set forth in 6 CFR part 5. You must first verify your identity, meaning that you must provide your full name, current address and date and place of birth. You must sign your request, and your signature must either be notarized or submitted under 28 U.S.C. 1746, a law that permits statements to be made under penalty of perjury as a substitute for notarization. While no specific form is required, you may obtain forms for this purpose from the Director, Disclosure and FOIA, *http://www.dhs.gov* or 1–866–431–0486. In addition you should provide the following:

- An explanation of why you believe the Department would have information on you,
- Identify which component(s) of the Department you believe may have the information about you,
- Specify when you believe the records would have been created,
- Provide any other information that will help the FOIA staff determine which DHS component agency may have responsive records,
- If your request is seeking records pertaining to another living individual, you must include a statement from that individual certifying his/her agreement for you to access his/her records.

Without this bulleted information the component(s) may not be able to conduct an effective search, and your

request may be denied due to lack of specificity or lack of compliance with applicable regulations.

RECORD ACCESS PROCEDURES:

See ''Notification procedure'' above.

CONTESTING RECORD PROCEDURES:

See ''Notification procedure'' above.

RECORD SOURCE CATEGORIES:

Records are generated from sources contacted during personnel and background investigations.

EXEMPTIONS CLAIMED FOR THE SYSTEM:

The Secretary of Homeland Security has exempted this system from subsections (c)(3), (d), (e)(1), (e)(4)(G), (H), (I), and (f) of the Privacy Act pursuant to 5 U.S.C. 552a (k)(1), (k)(2), (k)(3), and (k)(5) of the Privacy Act.

Dated: December 22, 2008.

Hugo Teufel III,

Chief Privacy Officer, Department of Homeland Security.

[FR Doc. E9–924 Filed 1–15–09; 8:45 am]

BILLING CODE 4410–10–P

DEPARTMENT OF HOMELAND SECURITY

Office of the Secretary

Privacy Act of 1974; System of Records

AGENCY: Privacy Office, DHS.

ACTION: Notice of removal of one Privacy Act system of records notice.

SUMMARY: In accordance with the Privacy Act of 1974, the Department of Homeland Security is giving notice that it will remove one system of records notice from its inventory of record systems because Citizenship and Immigration Services, Customs and Border Protection, and Immigration and Customs Enforcement no longer requires the system. The obsolete system is Justice/INS–001 the Immigration and Naturalization Service Index System.

DATES: *Effective Date:* February 17, 2009.

FOR FURTHER INFORMATION CONTACT: Hugo Teufel III, Chief Privacy Officer, Department of Homeland Security, Washington, DC 20528, by telephone (703) 235–0780 or facsimile 703–483–2999.

SUPPLEMENTARY INFORMATION: Pursuant to the provisions of the Privacy Act of 1974, 5 U.S.C. 552a, and as part of its ongoing integration and management efforts, the Department of Homeland Security (DHS) is removing one U.S. Citizenship and Immigration Services (USCIS)/Customs and Border Protection (CBP)/Immigration and Customs Enforcement (ICE) system of records notice from its inventory of record systems.

DHS inherited this record system upon its creation in January of 2003. Upon review of its inventory of records systems, DHS has determined it no longer needs or uses this system of records and is retiring Justice/INS–001 the Immigration and Naturalization Service Index System (58 FR 51847 October 15, 1993).

Justice/INS–001 the Immigration and Naturalization Service Index System was originally established to collect and maintain records on the management, operational, and enforcement activities of the Immigration and Naturalization Service.

This system of records notice is compromised of twenty-one subsystems. These subsystems are covered under the following Federal Government or DHS SORNs:

(a) DHS/ALL–007 Accounts Payable Records (73 FR 61880 October 17, 2008)

- Financial Section Indices

(b) DHS/ALL–008 Accounts Receivable Records (73 FR 61885 October 17, 2008)

- Financial Section Indices

(c) DHS/USCIS–001 Alien File and Central Index System (72 FR 1755 January 16, 2007)

- Alien Documentation, Identification, and Telecommunications (ADIT) System
- Alien Enemy Index and Records
- Microfilmed Manifest Records

(d) DHS/ALL–010 Asset Management (73 FR 63181 October 23, 2008)

- Property Issued to Employees

(e) DHS/USCIS–007 Benefits Information System (73 FR 56596 September 29, 2008)

- Examination Indices

(f) DHS/ALL–021 Contractors and Consultants (73 FR 63179 October 23, 2008)

- Document Vendors and Alters Index

(g) DHS/ALL–016 Correspondence Files (73 FR 66657 November 10, 2008)

- Congressional Mail Unit Correspondence Control Index
- White House and Attorney General Correspondence Control Index

(h) OPM/GOV–10 Employee Medical File System Records (71 FR 35360 June 19, 2006)

- Health Record System

(i) DHS/ALL–014 Emergency Personnel Location Records (73 FR 61888 October 17, 2008)

- Emergency Reassignment Index

(j) DHS/ICE–CBP–CIS–001–03 Enforcement Operational Immigration Records (71 FR 13987 March 20, 2006)

- Enforcement Indices

(k) OPM/GOVT–1 General Personnel Records (71 FR 35342 June 19, 2006)

- Compassionate Cases System

(l) DHS/ALL–003 General Training Records (73 FR 71656 November 25, 2008)

- Extension Training Program Enrollees

(m) DHS/ALL–020 Internal Affairs (73 FR 67529 November 18, 2008)

- Office of Internal Audit Investigations Index and Records

Consistent with the publishing of the following two SORNs, this retirement will be in effect:

(n) DHS/ALL–024 Law Enforcement Authority in Support of the Protection of Property Owned or Occupied by the Federal Government

- Agency Information Control Record Index
- Intelligence Indices
- Alien Enemy Index and Records

(o) DHS/ALL–023 Personnel Security Management

- Automobile Decal Parking Identification System for Employees
- Personal Data Card System
- Security Access Clearance Index

Eliminating these systems of records notices will have no adverse impacts on individuals but will promote the overall streamlining and management of DHS Privacy Act record systems.

Dated: December 22, 2008.

Hugo Teufel III,

Chief Privacy Officer, Department of Homeland Security.

[FR Doc. E9–934 Filed 1–15–09; 8:45 am]

BILLING CODE 4410–10–P

DEPARTMENT OF HOMELAND SECURITY

Office of the Secretary

[Docket No. DHS–2008–0133]

Privacy Act of 1974; Department of Homeland Security—025 Law Enforcement Authority in Support of the Protection of Property Owned or Occupied by the Department of Homeland Security

AGENCY: Privacy Office; DHS.

ACTION: Notice of Privacy Act system of records.

SUMMARY: In accordance with the Privacy Act of 1974, the Department of Homeland Security proposes to partially consolidate DHS–OS–001 Office of Security File System, (September 12, 2006), into a new Department-wide record system titled, Law Enforcement Authority in Support of the Protection

of Property Owned or Occupied by the Department of Homeland Security System of Records. Categories of individuals, categories of records, and the routine uses of this legacy system have been reviewed and updated to better reflect the Department's law enforcement records associated with the protection of property owned or occupied by the Department of Homeland Security. Additionally, the Department of Homeland Security is issuing a Notice of Proposed Rulemaking concurrent with this system of records elsewhere in the **Federal Register**. The activities performed by the Department in the protection of property owned or occupied by Department of Homeland Security often overlaps with other security-related activities. Accordingly, data within the categories of individuals, categories of records, and routine uses may have similarities with other security-related systems of records, but each system is distinct based on its purpose. Exclusion is made to perimeters and facilities secured by the United States Secret Service pursuant to 18 U.S.C. 3056 and 3056A and are not included under this system of records. This consolidated system will be included in the Department of Homeland Security's inventory of record systems.

DATES: Written comments must be submitted on or before February 17, 2009. This new system will be effective February 17, 2009.

ADDRESSES: You may submit comments, identified by docket number DHS–2008–0133 by one of the following methods:

- *Federal e-Rulemaking Portal: http://www.regulations.gov.* Follow the instructions for submitting comments.
- *Fax:* 703–483–2999.
- *Mail:* Hugo Teufel III, Chief Privacy Officer, Privacy Office, Department of Homeland Security, Washington, DC 20528.
- *Instructions:* All submissions received must include the agency name and docket number for this rulemaking. All comments received will be posted without change and may be read at *http://www.regulations.gov,* including any personal information provided.
- *Docket:* For access to the docket to read background documents or comments received, go to *http://www.regulations.gov.*

FOR FURTHER INFORMATION CONTACT: For general questions and privacy issues please contact: Hugo Teufel III (703–235–0780), Chief Privacy Officer, Privacy Office, Department of Homeland Security, Washington, DC 20528.

SUPPLEMENTARY INFORMATION:

I. Background

In accordance with the Privacy Act of 1974, the Department of Homeland Security (DHS) proposes to partially consolidate DHS-OS–001 Office of Security File System, (71 FR 53700 September 12, 2006), into a new Department wide record system titled, Law Enforcement Authority in Support of the Protection of Property Owned or Occupied by the Federal Government System of Records. Categories of individuals, categories of records, and the routine uses of this legacy system have been reviewed and updated to better reflect the Department's law enforcement records associated with the protection of property owned or occupied by the DHS. Additionally, DHS is issuing a Notice of Proposed Rulemaking (NPRM) concurrent with this system of records elsewhere in the **Federal Register**. DHS has previously issued an NPRM with DHS-OS–001 Office of Security File System, (71 FR 53700 September 12, 2006), but given the changes to this SORN is reissuing the NPRM to again allow for additional public comment.

The activities performed by the Department in the protection of property owned or occupied by the DHS often overlaps with other security-related activities. Accordingly, data within the categories of individuals, categories of records, and routine uses may have similarities with other security-related systems of records, but each system is distinct based on its purpose.

The purpose of this system is to maintain and record the results of law enforcement activities in support of the protection of property owned or occupied by DHS. The results are also used to pursue criminal prosecutions or civil penalties action against individuals or entities suspected of offenses that may have been committed against property owned or occupied by the DHS or persons on DHS property; and to assess acceptability of Departmental, other United States Government personnel contract security officer personnel, and other contractors who work in DHS facilities for assignment to or retention in sensitive positions consistent with the interest of national security and protection of DHS facilities.

In accordance with the Privacy Act of 1974, the Department of Homeland Security proposes to partially consolidate DHS-OS–001 Office of Security File System, (September 12, 2006), into a new Department-wide record system titled, DHS/ALL—025 Law Enforcement Authority in Support of the Protection of Property Owned or Occupied by Department of Homeland Security System of Records. Categories of individuals, categories of records, and the routine uses of this legacy system have been reviewed and updated to better reflect the Department's law enforcement records associated with the protection of property owned or occupied by DHS. Additionally, DHS is issuing a Notice of Proposed Rulemaking concurrent with this system of records elsewhere in the **Federal Register**. The activities performed by the Department in the protection of property owned or occupied by DHS often overlaps with other security-related activities. Accordingly, data within the categories of individuals, categories of records, and routine uses may have similarities with other security-related systems of records, but each system is distinct based on its purpose. Exclusion is made to perimeters and facilities secured by the United States Secret Service pursuant to 18 U.S.C. 3056 and 3056A and are not included under this system of records. This consolidated system will be included in the Department of Homeland Security's inventory of record systems.

II. Privacy Act

The Privacy Act embodies fair information principles in a statutory framework governing the means by which the United States Government collects, maintains, uses and disseminates individual's records. The Privacy Act applies to information that is maintained in a ''system of records.'' A ''system of records'' is a group of any records under the control of an agency from which information is stored and retrieved by the name of the individual or by some identifying number such as property address, mailing address, or symbol assigned to the individual. In the Privacy Act, an individual is defined to encompass United States citizens and lawful permanent residents. DHS extends administrative Privacy Act protections to all individuals where information is maintained on both U.S. citizens, lawful permanent residents, and visitors. Individuals may request their own records that are maintained in a system of records in the possession or under the control of DHS by complying with DHS Privacy Act regulations, 6 CFR 5.21.

The Privacy Act requires each agency to publish in the **Federal Register** a description denoting the type and character of each system of records that the agency maintains, and the routine uses that are contained in each system in order to make agency record keeping

practices transparent, to notify individuals regarding the uses of their records, and to assist individuals to more easily find such files within the agency. Below is a description of ''DHS/All—025 Law Enforcement Authorities in Support of the Protection of Property Owned or Occupied by the Department of Homeland Security'' Systems of Records Notice.

In accordance with 5 U.S.C. 552a(r), DHS has provided a report of this new system of records to the Office of Management and Budget (OMB) and to Congress.

SYSTEM OF RECORDS:

DHS/ALL–025.

SYSTEM NAME:

Department of Homeland Security Law Enforcement Authorities in Support of the Protection of Property Owned or Occupied by the Department of Homeland Security System of Records.

SECURITY CLASSIFICATION:

Unclassified, sensitive, for official use only, and classified.

SYSTEM LOCATION:

Records are maintained at several Headquarters locations and in component offices of the Department of Homeland Security, in both Washington, D.C. and field locations.

CATEGORIES OF INDIVIDUALS COVERED BY THE SYSTEM:

Categories of individuals covered by this system include any person or entity involved in, or suspected of being involved in, criminal acts against the buildings, grounds, and property that are owned, occupied, or secured by DHS or against persons who are in or on such buildings, grounds, or property. This includes, but is not limited to: any agency, instrumentality, or wholly owned or mixed-ownership corporation thereof, and persons on the property; Departmental, other United States Government personnel, and contract security officer personnel, and other contractors who work in federal facilities; and property located in or outside of the United States; and individuals who are involved in or suspected to be involved in such criminal acts, who provide information that is relevant to the investigation, such as victims and witnesses, and who report such crimes or acts. Also included in this system of records are the travel records of current, former, or retired Departmental personnel who travelled outside the United States while employees of DHS; applicants, appointees and nominees of the Department; and contractors and consultants who have or have had access DHS facilities and/or classified national security information.

CATEGORIES OF RECORDS IN THE SYSTEM:

Categories of records in this system may include but are not limited to the following:

- Individual's or entity's name;
- Digital photograph;
- Social security number;
- Age and date of birth;
- Place of birth;
- Duty/work address and telephone number;
- Alias;
- Race and ethnicity;
- Citizenship;
- Fingerprints;
- Sex;
- Marital status;
- Identifying marks such as tattoos, scars, etc;
- Height and weight;
- Eye and hair color;
- Biometric data;
- Home address, telephone number and other contact information;
- Driver's license information and citations issued;
- Vehicle information;
- Date, location, nature and details of the incident/offense;
- Alcohol, drugs and/or weapons involvement;
- Bias against any particular group;
- Confinement information to include location of correctional facility;
- Gang/cult affiliation if applicable;
- Release/parole/clemency eligibility dates.
- Foreign travel notices and reports including briefings and debriefings;
- Notices and reports with foreign contacts;
- Reports of investigation;
- Statements of individuals, affidavits, and correspondence;
- Documentation pertaining to criminal activities;
- Investigative surveys;
- Certifications pertaining to qualifications for employment, including but not limited to education, firearms, first aid, and CPR;
- Technical, forensic, polygraph, and other investigative support to criminal investigations to include source control documentation and region information;
- Data on individuals to include: Victims, witnesses, complainants, offenders, and suspects;
- Records of possible espionage, foreign intelligence service elicitation activities, and terrorist collection efforts directed at the Department or its staff, contractors or visitors;
- Records of close coordination with the intelligence and law enforcement community;
- Records relating to the management and operation of DHS special security programs, including but not limited to:
  - Requests for access to sensitive compartmented information (SCI);
  - Foreign travel;
  - Foreign contact registries for individuals with SCI access.
- Records relating to the management and operation of the DHS security program, including but not limited to:
  - Inquiries relating to suspected security violation(s);
  - Recommended remedial actions for possible security violation(s);
  - Reports of investigation regarding security violations;
  - Statements of individuals;
  - Affidavits;
  - Correspondence;
  - Other documentation pertaining to investigative or analytical efforts by the DHS to identify threats to the Department's personnel, property, facilities, and information; intelligence reports and database results relating to DHS personnel applicants or candidates for DHS employment or a DHS contract, or other individuals interacting or having contact with DHS personnel or contractors; foreign contact registries for individuals; or unsolicited communications with DHS personnel or contractors that raise a security concern.
  - Other documents obtained from applicants for employment or contract positions and documents obtained during a background investigation or re-investigation including medical and financial data.

AUTHORITY FOR MAINTENANCE OF THE SYSTEM:

5 U.S.C. 301; the Federal Record Act, 6 U.S.C., the Homeland Security Act; 40 U.S.C. 1315; 44 U.S.C. 3101; and Executive Order 9397; EO 10450; EO 12968, 5 CFR 731; 5 CFR 732; 5 CFR 736; 32 CFR 147; and DCID 6/4.

PURPOSE(S):

The purpose of this system is to maintain and record the results of law enforcement activities in support of the protection of property owned or occupied by Department of Homeland Security (DHS) and individuals maintaining a presence or access to such property. Also to pursue criminal prosecution or civil penalty action against individuals or entities suspected of offenses that may have been committed against property owned or occupied by DHS or persons on the property; and assess Departmental, contract security officer personnel, and other contractors who work in DHS facilities, acceptability for assignment to or retention in sensitive positions consistent with the interest of national

security and the protection of DHS facilities.

ROUTINE USES OF RECORDS MAINTAINED IN THE SYSTEM, INCLUDING CATEGORIES OF USERS AND THE PURPOSES OF SUCH USES:

In addition to those disclosures generally permitted under 5 U.S.C. 552a(b) of the Privacy Act, all or a portion of the records of information contained in this system may be disclosed outside DHS as a routine use pursuant to 5 U.S.C. 552a(b)(3) as follows:

A. To the Department of Justice (including United States Attorney Offices) or other Federal agency conducting litigation or in proceedings before any court, adjudicative or administrative body when it is necessary to the litigation and one of the following is a party to the litigation or has an interest in such litigation:

1. DHS or any component thereof;

2. Any employee of DHS in his/her official capacity;

3. Any employee of DHS in his/her individual capacity where DOJ or DHS has agreed to represent the employee; or

4. The United States or any agency thereof, is a party to the litigation or has an interest in such litigation, and DHS determines that the records are both relevant and necessary to the litigation and the use of such records is compatible with the purpose for which DHS collected the records.

B. To a congressional office from the record of an individual in response to a written inquiry from that congressional office made at the written request of the individual to whom the record pertains.

C. To the National Archives and Records Administration or other Federal government agencies pursuant to records management inspections being conducted under the authority of 44 U.S.C. 2904 and 2906.

D. To an agency, organization, or individual for the purpose of performing audit or oversight operations as authorized by law, but only such information as is necessary and relevant to such audit or oversight function.

E. To appropriate agencies, entities, and persons when:

1. DHS suspects or has confirmed that the security or confidentiality of information in the system of records has been compromised;

2. The Department has determined that as a result of the suspected or confirmed compromise there is a risk of harm to economic or property interests, identity theft or fraud, or harm to the security or integrity of this system or other systems or programs (whether maintained by DHS or another agency or entity) or harm to the individual who relies upon the compromised information; and

3. The disclosure made to such agencies, entities, and persons is reasonably necessary to assist in connection with DHS's efforts to respond to the suspected or confirmed compromise and prevent, minimize, or remedy such harm.

F. To contractors and their agents, grantees, experts, consultants, and others performing or working on a contract, service, grant, cooperative agreement, or other assignment for DHS, when necessary to accomplish an agency function related to this system of records. Individuals provided information under this routine use are subject to the same Privacy Act requirements and limitations on disclosure as are applicable to DHS officers and employees.

G. To an appropriate Federal, State, tribal, local, international, or foreign law enforcement agency or other appropriate authority charged with investigating or prosecuting a violation or enforcing or implementing a law, rule, regulation, or order, where a record, either on its face or in conjunction with other information, indicates a violation or potential violation of law, which includes criminal, civil, or regulatory violations and such disclosure is proper and consistent with the official duties of the person making the disclosure.

H. To an appropriate Federal, State, local, tribal, foreign, or international agency or contract provider, if the information is relevant and necessary to a requesting agency's decision concerning the hiring or retention of an individual, or issuance of a security clearance, license, contract, grant, or other benefit, or if the information is relevant and necessary to a DHS decision concerning the hiring or retention of an employee or contractor, the issuance of a security clearance, the reporting of an investigation of an employee or contractor, the letting of a contract, or the issuance of a license, grant or other benefit and disclosure is appropriate to the proper performance of the official duties of the person making the request.

I. To a court, magistrate, or administrative tribunal in the course of presenting evidence, including disclosures to opposing counsel or witnesses in the course of civil discovery, litigation, or settlement negotiations or in connection with criminal law proceedings or pursuant to the order of a court of competent jurisdiction in response to a subpoena from a court of competent jurisdiction.

J. To third parties during the course of a law enforcement investigation to the extent necessary to obtain information pertinent to the investigation, provided disclosure is appropriate to the proper performance of the official duties of the officer making the disclosure.

K. To a Federal, State, local agency, or other appropriate entities or individuals, or through established liaison channels to selected foreign governments, in order to provide intelligence, counterintelligence, or other information for the purposes of intelligence, counterintelligence, or antiterrorism activities authorized by United States law, Executive Order, or other applicable national security directive.

L. To a public or professional licensing organization when such information indicates, either by itself or in combination with other information, a violation or potential violation of professional standards, or reflects on the moral, educational, or professional qualifications of an individual who is licensed or who is seeking to become licensed.

M. To the news media and the public, with the approval of the Chief Privacy Officer in consultation with counsel, when there exists a legitimate public interest in the disclosure of the information or when disclosure is necessary to preserve confidence in the integrity of DHS or is necessary to demonstrate the accountability of DHS's officers, employees, or individuals covered by the system, except to the extent it is determined that release of the specific information in the context of a particular case would constitute an unwarranted invasion of personal privacy.

DISCLOSURE TO CONSUMER REPORTING AGENCIES:

None.

POLICIES AND PRACTICES FOR STORING, RETRIEVING, ACCESSING, RETAINING, AND DISPOSING OF RECORDS IN THE SYSTEM:

STORAGE:

Records in this system are stored electronically or on paper in secure facilities in a locked drawer behind a locked door. The records are stored on servers, magnetic disc, tape, digital media, and CD–ROM.

RETRIEVABILITY:

Records may be retrieved by individual name and social security number, if applicable.

SAFEGUARDS:

Records in this system are safeguarded in accordance with applicable rules and policies, including

all applicable DHS automated systems security and access policies. Strict controls have been imposed to minimize risk of compromising the information that is being stored. Access to the computer system containing the records in this system is limited to those individuals who have a need to know the information for the performance of their official duties and who have appropriate clearances or permissions.

RETENTION AND DISPOSAL:

Records are pending National Archives and Records Administration approval. DHS has proposed the following retention schedule: Records are maintained in accordance with N1–563–08–4, Item 1. Records are cut off at the end of the fiscal year when the case is closed and are destroyed 20 years after cutoff date. No records will be destroyed until the retention schedule is approved.

SYSTEM MANAGER AND ADDRESS:

For Headquarters components of DHS, the System Manager is the Director of Departmental Disclosure, Department of Homeland Security, Washington, DC 20528. For components of DHS, the System Manager can be found at *http://www.dhs.gov/foia* under ''contacts.''

NOTIFICATION PROCEDURE:

The Secretary of Homeland Security has exempted this system from the notification, access, and amendment procedures of the Privacy Act because it is a law enforcement system. However, DHS will consider individual requests to determine whether or not information may be released. Thus, individuals seeking notification of and access to any record contained in this system of records, or seeking to contest its content, may submit a request in writing to the Headquarters or component's FOIA Officer, whose contact information can be found at *http://www.dhs.gov/foia* under ''contacts.'' If an individual believes more than one component maintains Privacy Act records concerning him or her the individual may submit the request to the Chief Privacy Officer, Department of Homeland Security, 245 Murray Drive, SW., Building 410, STOP–0550, Washington, DC 20528.

When seeking records about yourself from this system of records or any other Departmental system of records your request must conform with the Privacy Act regulations set forth in 6 CFR Part 5. You must first verify your identity, meaning that you must provide your full name, current address and date and place of birth. You must sign your request, and your signature must either be notarized or submitted under 28 U.S.C. 1746, a law that permits statements to be made under penalty of perjury as a substitute for notarization. While no specific form is required, you may obtain forms for this purpose from the Director, Disclosure and FOIA, *http://www.dhs.gov* or 1–866–431–0486. In addition you should provide the following:

- An explanation of why you believe the Department would have information on you,
- Identify which component(s) of the Department you believe may have the information about you,
- Specify when you believe the records would have been created,
- Provide any other information that will help the FOIA staff determine which DHS component agency may have responsive records,
- If your request is seeking records pertaining to another living individual, you must include a statement from that individual certifying his/her agreement for you to access his/her records.

Without this bulleted information the component(s) may not be able to conduct an effective search, and your request may be denied due to lack of specificity or lack of compliance with applicable regulations.

RECORD ACCESS PROCEDURES:

See ''Notification procedure'' above.

CONTESTING RECORD PROCEDURES:

See ''Notification procedure'' above.

RECORD SOURCE CATEGORIES:

Records are generated from sources contacted during investigations, state and local law enforcement, and Federal departments and agencies.

EXEMPTIONS CLAIMED FOR THE SYSTEM:

The Secretary of Homeland Security has exempted this system from subsections (c)(3), (d), (e)(1), (e)(4)(G), (H), (I), and (f) of the Privacy Act pursuant to 5 U.S.C. 552a (k)(1), (k)(2), and (k)(5) of the Privacy Act.

Dated: December 22, 2008.

Hugo Teufel III,

Chief Privacy Officer, Department of Homeland Security.

[FR Doc. E9–923 Filed 1–15–09; 8:45 am]

BILLING CODE 4410–10–P

DEPARTMENT OF HOMELAND SECURITY

Coast Guard

[Docket No. USCG–2008–1057]

Notification of the Imposition of Conditions of Entry for Certain Vessels Arriving to the United States; Venezuela

AGENCY: Coast Guard, DHS.

ACTION: Notice.

SUMMARY: The Coast Guard announces that it will impose conditions of entry on vessels arriving from the country of Venezuela.

DATES: The policy announced in this notice will become effective January 23, 2009.

ADDRESSES: This notice will be available for inspection and copying at the Docket Management Facility at the U.S. Department of Transportation, Room W12–140 on the Ground Floor of the West Building, 1200 New Jersey Avenue, SE., Washington, DC 20590, between 9 a.m. and 5 p.m., Monday through Friday, except Federal holidays. The telephone number is 202–366–9329.

FOR FURTHER INFORMATION CONTACT: If you have questions on this notice, call Mr. Michael Brown, International Port Security Evaluation Division, Coast Guard, telephone 202–372–1081. If you have questions on viewing or submitting material to the docket, call Ms. Renee V. Wright, Program Manager, Docket Operations, telephone 202–366–9826.

SUPPLEMENTARY INFORMATION:

Background and Purpose

Section 70110 of the Maritime Transportation Security Act of 2002 (Pub. L. 107–295, Nov. 25, 2002) (46 U.S.C. 70110) provides that the Secretary of Homeland Security may impose conditions of entry on vessels requesting entry into the United States arriving from ports that are not maintaining effective anti-terrorism measures. The Coast Guard has been delegated the authority by the Secretary to carry out the provisions of this section. Previous notices have imposed or removed conditions of entry on vessels arriving from certain countries and those conditions of entry and the countries they pertain to remain in effect unless modified by this notice.

The Coast Guard has determined that ports in Venezuela are not maintaining effective anti-terrorism measures. Accordingly, effective January 23, 2009 the Coast Guard will impose the following conditions of entry on vessels

that visited ports in Venezuela during their last five port calls. Vessels must:

- Implement measures per the ship's security plan equivalent to Security level 2 while in a port in the above country;
- Ensure that each access point to the ship is guarded and that the guards have total visibility of the exterior (both landside and waterside) of the vessel while the vessel is in ports in the above country. Guards may be provided by the ship's crew, however, additional crewmembers should be placed on the ship if necessary to ensure that limits on maximum hours of work are not exceeded and/or minimum hours of rest are met, or provided by outside security forces approved by the ship's master and Company Security Officer;
- Attempt to execute a Declaration of Security while in a port in the above country;
- Log all security actions in the ship's log;
- Report actions taken to the cognizant U.S. Coast Guard Captain of the Port prior to arrival into U.S. waters; and
- Based on the findings of the Coast Guard boarding or examination, vessels may be required to ensure that each access point to the ship is guarded by armed private security guards and that they have total visibility of the exterior (both landside and waterside) of the vessel while in U.S. ports. The number and position of the guards has to be acceptable to the cognizant Coast Guard Captain of the Port prior to the vessel's arrival.

Dated: January 9, 2009.

Rear Admiral Sally Brice-O'Hara,

USCG, Deputy Commandant for Operations.

[FR Doc. E9–845 Filed 1–15–09; 8:45 am]

BILLING CODE 4910–15–P

DEPARTMENT OF HOUSING AND URBAN DEVELOPMENT

[Docket No. FR–5281–N–01]

Notice of Proposed Information Collection: Comment Request; HUD Acquisition Regulations (HUDAR)

AGENCY: Office of the Chief Information Officer, HUD.

ACTION: Notice.

SUMMARY: The proposed information collection requirement described below will be submitted to the Office of Management and Budget (OMB) for review, as required by the Paperwork Reduction Act. The Department is soliciting public comments on the subject proposal.

HUDAR is the Department's supplement to the Federal Acquisition Regulation (FAR). The information collection required of the public is solely in connection with the acquisition process.

DATES: *Comments due:* March 17, 2009.

ADDRESSES: Interested persons are invited to submit comments regarding this proposal. Comments should refer to the proposal by name and/or OMB Control Number (2535–0091) and should be sent to: HUD Desk Officer, Office of Management and Budget, New Executive Office Building, Washington, DC 20503; fax: 202–395–6974.

FOR FURTHER INFORMATION CONTACT: Lillian L. Deitzer, Reports Management Officer, QDAM, Department of Housing and Urban Development, 451 Seventh Street, SW., Washington, DC 20410; e-mail Lillian Deitzer at *Lillian_L_Deitzer @HUD.gov* or telephone (202) 402–8048. This not a toll-free number copies of available documents submitted to OMB may be obtained from Ms. Deitzer.

SUPPLEMENTARY INFORMATION: The Department will submit the proposed information collection to OMB for review, as required by the Paperwork Reduction Act of 1995 (44 U.S.C. Chapter 35, as amended).

This Notice is soliciting comments from members of the public and affecting agencies concerning the proposed collection of information to: (1) Evaluate whether the proposed collection of information is necessary for the proper performance of the functions of the agency, including whether the information will have practical utility; (2) Evaluate the accuracy of the agency's estimate of the burden of the proposed collection of information; (3) Enhance the quality, utility, and clarity of the information to be collected; and (4) Minimize the burden of the collection of information on those who are to respond; including through the use of appropriate automated collection techniques or other forms of information technology, e.g., permitting electronic submission of responses.

This Notice also lists the following information:

Title of Proposal: HUD Acquisition Regulations (HUDAR).

OMB Control Number, if applicable: 2535–0091.

Description of the need for the information and proposed use: HUDAR is the Department's supplement to the Federal Acquisition Regulation (FAR). The information collection required of the public is solely in connection with the acquisition process.

Agency form numbers, if applicable: HUD–770.

Member of Affected Public: Individuals or Households, Business or Other for-Profit, Not-for-Profit Institutions.

Estimation of the total number of hours needed to prepare the information collection including number of respondents, frequency of response, and hours of response:

	Number of respondents	Annual responses	×	Hours per response	=	Burden hours
Reporting Burden	3,200	3.5		3.5		39,196

Total Estimated Burden Hours: 39,196.

Status of the proposed information collection: Extension of a currently approved collection.

Authority: Section 3506 of the Paperwork Reduction Act of 1995, 44 U.S.C. Chapter 35, as amended.

Dated: January 9, 2009.

Lillian L. Deitzer,

Departmental Paperwork Reduction Act Officer, Office of the Chief Information Officer.

[FR Doc. E9–853 Filed 1–15–09; 8:45 am]

BILLING CODE 4210–67–P

DEPARTMENT OF HOUSING AND URBAN DEVELOPMENT

[Docket No. FR–5280–N–02]

Federal Property Suitable as Facilities To Assist the Homeless

AGENCY: Office of the Assistant Secretary for Community Planning and Development, HUD.

ACTION: Notice.

SUMMARY: This Notice identifies unutilized, underutilized, excess, and surplus Federal property reviewed by HUD for suitability for possible use to assist the homeless.

DATES: *Effective Date:* January 16, 2009.

FOR FURTHER INFORMATION CONTACT: Kathy Ezzell, Department of Housing and Urban Development, 451 Seventh Street SW., Room 7262, Washington, DC 20410; telephone (202) 708–1234; TTY number for the hearing- and speech-impaired (202) 708–2565, (these telephone numbers are not toll-free), or call the toll-free Title V information line at 800–927–7588.

SUPPLEMENTARY INFORMATION: In accordance with the December 12, 1988 court order in *National Coalition for the Homeless* v. *Veterans Administration,* No. 88–2503–OG (D.D.C.), HUD publishes a Notice, on a weekly basis, identifying unutilized, underutilized, excess and surplus Federal buildings and real property that HUD has reviewed for suitability for use to assist the homeless. Today's Notice is for the purpose of announcing that no additional properties have been determined suitable or unsuitable this week.

Dated: January 8, 2009.

Mark R. Johnston,

Deputy Assistant Secretary for Special Needs.

[FR Doc. E9–564 Filed 1–15–09; 8:45 am]

BILLING CODE 4210–67–P

DEPARTMENT OF HOUSING AND URBAN DEVELOPMENT

[Docket No. FR–5276–N–01]

Mortgage and Loan Insurance Programs Under the National Housing Act—Debenture Interest Rates

AGENCY: Office of the Assistant Secretary for Housing—Federal Housing Commissioner, HUD.

ACTION: Notice.

SUMMARY: This notice announces changes in the interest rates to be paid on debentures issued with respect to a loan or mortgage insured by the Federal Housing Administration under the provisions of the National Housing Act (the Act). The interest rate for debentures issued under section 221(g)(4) of the Act during the 6-month period beginning January 1, 2009, is 3¾ percent. The interest rate for debentures issued under any other provision of the Act is the rate in effect on the date that the commitment to insure the loan or mortgage was issued, or the date that the loan or mortgage was endorsed (or initially endorsed if there are two or more endorsements) for insurance, whichever rate is higher. The interest rate for debentures issued under these other provisions with respect to a loan or mortgage committed or endorsed during the 6-month period beginning January 1, 2009, is 4⅛ percent. However, as a result of an amendment to section 224 of the Act, if an insurance claim relating to a mortgage insured under sections 203 or 234 of the Act and endorsed for insurance after January 23, 2004, is paid in cash, the debenture interest rate for purposes of calculating a claim shall be the monthly average yield, for the month in which the default on the mortgage occurred, on United States Treasury Securities adjusted to a constant maturity of 10 years.

FOR FURTHER INFORMATION CONTACT: Yong Sun, Department of Housing and Urban Development, 451 Seventh Street, SW., Room 5148, Washington, DC 20410–8000; telephone (202) 402–4778 (this is not a toll-free number). Individuals with speech or hearing impairments may access this number through TTY by calling the toll-free Federal Information Relay Service at (800) 877–8339.

SUPPLEMENTARY INFORMATION: Section 224 of the National Housing Act (12 U.S.C. 1715o) provides that debentures issued under the Act with respect to an insured loan or mortgage (except for debentures issued pursuant to section 221(g)(4) of the Act) will bear interest at the rate in effect on the date the commitment to insure the loan or mortgage was issued, or the date the loan or mortgage was endorsed (or initially endorsed if there are two or more endorsements) for insurance, whichever rate is higher. This provision is implemented in HUD's regulations at 24 CFR 203.405, 203.479, 207.259(e)(6), and 220.830. These regulatory provisions state that the applicable rates of interest will be published twice each year as a notice in the **Federal Register**.

Section 224 further provides that the interest rate on these debentures will be set from time to time by the Secretary of HUD, with the approval of the Secretary of the Treasury, in an amount not in excess of the annual interest rate determined by the Secretary of the Treasury pursuant to a statutory formula based on the average yield of all outstanding marketable Treasury obligations of maturities of 15 or more years.

The Secretary of the Treasury (1) has determined, in accordance with the provisions of section 224, that the statutory maximum interest rate for the period beginning January 1, 2009, is 4⅛ percent; and (2) has approved the establishment of the debenture interest rate by the Secretary of HUD at 4⅛ percent for the 6-month period beginning January 1, 2009. This interest rate will be the rate borne by debentures issued with respect to any insured loan or mortgage (except for debentures issued pursuant to section 221(g)(4)) with insurance commitment or endorsement date (as applicable) within the first 6 months of 2009.

For convenience of reference, HUD is publishing the following chart of debenture interest rates applicable to mortgages committed or endorsed since January 1, 1980:

Effective interest rate	On or after	Prior to
9½	Jan. 1, 1980	July 1, 1980
9⅞	July 1, 1980	Jan. 1, 1981
11¾	Jan. 1, 1981	July 1, 1981
12⅞	July 1, 1981	Jan. 1, 1982
12¾	Jan. 1, 1982	Jan. 1, 1983
10¼	Jan. 1, 1983	July 1, 1983
10⅜	July 1, 1983	Jan. 1, 1984
11½	Jan. 1, 1984	July 1, 1984
13⅜	July 1, 1984	Jan. 1, 1985
11⅝	Jan. 1, 1985	July 1, 1985
11⅛	July 1, 1985	Jan. 1, 1986
10¼	Jan. 1, 1986	July 1, 1986
8¼	July 1, 1986	Jan. 1, 1987
8	Jan. 1, 1987	July 1, 1987

Effective interest rate	On or after	Prior to
9	July 1, 1987	Jan. 1, 1988
9⅛	Jan. 1, 1988	July 1, 1988
9⅜	July 1, 1988	Jan. 1, 1989
9¼	Jan. 1, 1989	July 1, 1989
9	July 1, 1989	Jan. 1, 1990
8⅛	Jan. 1, 1990	July 1, 1990
9	July 1, 1990	Jan. 1, 1991
8¾	Jan. 1, 1991	July 1, 1991
8½	July 1, 1991	Jan. 1, 1992
8	Jan. 1, 1992	July 1, 1992
8	July 1, 1992	Jan. 1, 1993
7¾	Jan. 1, 1993	July 1, 1993
7	July 1, 1993	Jan. 1, 1994
6⅝	Jan. 1, 1994	July 1, 1994
7¾	July 1, 1994	Jan. 1, 1995
8⅜	Jan. 1, 1995	July 1, 1995
7¼	July 1, 1995	Jan. 1, 1996
6½	Jan. 1, 1996	July 1, 1996
7¼	July 1, 1996	Jan. 1, 1997
6¾	Jan. 1, 1997	July 1, 1997
7⅛	July 1, 1997	Jan. 1, 1998
6⅜	Jan. 1, 1998	July 1, 1998
6⅛	July 1, 1998	Jan. 1, 1999
5½	Jan. 1, 1999	July 1, 1999
6⅛	July 1, 1999	Jan. 1, 2000
6½	Jan. 1, 2000	July 1, 2000
6½	July 1, 2000	Jan. 1, 2001
6	Jan. 1, 2001	July 1, 2001
5⅞	July 1, 2001	Jan. 1, 2002
5¼	Jan. 1, 2002	July 1, 2002
5¾	July 1, 2002	Jan. 1, 2003
5	Jan. 1, 2003	July 1, 2003
4½	July 1, 2003	Jan. 1, 2004
5⅛	Jan. 1, 2004	July 1, 2004
5½	July 1, 2004	Jan. 1, 2005
4⅞	Jan. 1, 2005	July 1, 2005
4½	July 1, 2005	Jan. 1, 2006
4⅞	Jan. 1, 2006	July 1, 2006
5⅜	July 1, 2006	Jan. 1, 2007
4¾	Jan. 1, 2007	July 1, 2007
5	July 1, 2007	Jan. 1, 2008
4½	Jan. 1, 2008	July 1, 2008
4⅝	July 1, 2008	Jan. 1, 2009
4⅛	Jan. 1, 2009	July 1, 2009

Section 215 of Division G, Title II of Public Law 108–199, enacted January 23, 2004 (HUD's 2004 Appropriations Act) amended section 224 of the Act, to change the debenture interest rate for purposes of calculating certain insurance claim payments made in cash. Therefore, for all claims paid in cash on mortgages insured under section 203 or 234 of the National Housing Act and endorsed for insurance after January 23, 2004, the debenture interest rate will be the monthly average yield, for the month in which the default on the mortgage occurred, on United States Treasury Securities adjusted to a constant maturity of 10 years, as found in Federal Reserve Statistical Release H–15. The Federal Housing Administration has codified this provision in HUD regulations at 24 CFR 203.405(b) and 24 CFR 203.479(b).

Section 221(g)(4) of the Act provides that debentures issued pursuant to that paragraph (with respect to the assignment of an insured mortgage to the Secretary) will bear interest at the ''going Federal rate'' in effect at the time the debentures are issued. The term ''going Federal rate'' is defined to mean the interest rate that the Secretary of the Treasury determines, pursuant to a statutory formula based on the average yield on all outstanding marketable Treasury obligations of 8- to 12-year maturities, for the 6-month periods of January through June and July through December of each year. Section 221(g)(4) is implemented in the HUD regulations at 24 CFR 221.255 and 24 CFR 221.790.

The Secretary of the Treasury has determined that the interest rate to be borne by debentures issued pursuant to section 221(g)(4) during the 6-month period beginning January 1, 2009, is 3¾ percent.

The subject matter of this notice falls within the categorical exemption from HUD's environmental clearance procedures set forth in 24 CFR 50.19(c)(6). For that reason, no environmental finding has been prepared for this notice.

Authority: Sections 211, 221, 224, National Housing Act, 12 U.S.C. 1715b, 1715l, 1715o; Section 7(d), Department of HUD Act, 42 U.S.C. 3535(d).

Dated: January 12, 2009.

Brian D. Montgomery,

Assistant Secretary for Housing—Federal Housing Commissioner.

[FR Doc. E9–991 Filed 1–15–09; 8:45 am]

BILLING CODE 4210–67–P

DEPARTMENT OF THE INTERIOR

U.S. Geological Survey

Announcement of National Geospatial Advisory Committee Meeting

AGENCY: U.S. Geological Survey, Interior.

ACTION: Notice of meeting.

SUMMARY: The National Geospatial Advisory Committee (NGAC) will meet on February 4–5, 2009 at the Hotel Monaco, 480 King Street, Alexandria, VA 22314. The meeting will be held in the Paris West Room.

The NGAC, which is composed of representatives from governmental, private sector, non-profit, and academic organizations, was established to advise the Chair of the Federal Geographic Data Committee on management of Federal geospatial programs, the development of the National Spatial Data Infrastructure, and the implementation of Office of Management and Budget (OMB) Circular A–16. Topics to be addressed at the meeting include:

—Transition Activities

—The National Map

—OMB Circular A–16 Supplemental Guidance

—NGAC Vision

—Land Parcel Data Update

—Geospatial Partnerships

—NGAC Communications Activities

—NGAC Action Plan

The meeting will include an opportunity for public comment during the afternoon of February 5. Comments may also be submitted to the NGAC in writing.

Members of the public who wish to attend the meeting must register in advance. Please register by contacting Arista Maher at the U.S. Geological Survey (703–648–6283, *amaher@usgs.gov*). Registrations are due by January 30, 2009. While the meeting will be open to the public, seating may be limited due to room capacity.

DATES: The meeting will be held from 8:30 a.m. to 5 p.m. on February 4 and from 8 a.m. to 4 p.m. on February 5.

FOR FURTHER INFORMATION CONTACT: John Mahoney, U.S. Geological Survey (206–220–4621).

SUPPLEMENTARY INFORMATION: Meetings of the National Geospatial Advisory Committee are open to the public. Additional information about the NGAC and the meeting is available at *http://www.fgdc.gov/ngac.*

Dated: January 12, 2009.

Ivan DeLoatch,

Staff Director, Federal Geographic Data Committee.

[FR Doc. E9–918 Filed 1–15–09; 8:45 am]

BILLING CODE 4311–AM–P

DEPARTMENT OF THE INTERIOR

Bureau of Land Management

[F–14914–A, F–14914–A2; AK–965–1410–KC–P]

Alaska Native Claims Selection

AGENCY: Bureau of Land Management, Interior.

ACTION: Notice of decision approving lands for conveyance.

SUMMARY: As required by 43 CFR 2650.7(d), notice is hereby given that an appealable decision approving lands for conveyance pursuant to the Alaska Native Claims Settlement Act will be issued to Nunapitchuk Limited. The lands are in the vicinity of Nunapitchuk, Alaska, and are located in:

Lot 4, U.S. Survey No. 10374

Containing 4.79 acres.

Seward Meridian, Alaska

T. 10 N., R. 73 W.,
Sec. 19;
Secs. 29 to 32, inclusive.

Containing approximately 2,186 acres.

T. 10 N., R. 74 W.,
Secs. 1 and 2.

Containing approximately 668 acres.

T. 10 N., R. 75 W.,
Secs. 1 and 12.

Containing approximately 631 acres.

T. 11 N., R. 75 W.,
Secs. 5, 7, 8, 17, and 18.

Containing approximately 1,834 acres.

T. 7 N., R. 76 W.,
Secs. 28 to 36, inclusive.

Containing approximately 4,767 acres.

T. 11 N., R. 76 W.,
Secs. 1 and 2;
Secs. 11 to 14, inclusive.

Containing approximately 2,100 acres.

T. 9 N., R. 78 W.,
Secs. 1, 2, and 3;
Secs. 10 to 15, inclusive;
Secs. 22 to 27, inclusive.

Containing approximately 7,875 acres.

T. 10 N., R. 78 W.,
Secs. 1 to 18, inclusive;
Secs. 22 to 27, inclusive;
Secs. 34, 35, and 36.

Containing approximately 15,941 acres.

T. 11 N., R. 78 W.,
Secs. 1 to 30, inclusive;
Secs. 33 to 36, inclusive.

Containing approximately 12,705 acres.
Aggregating approximately 48,712 acres.

The subsurface estate in these lands will be conveyed to Calista Corporation when the surface estate is conveyed to Nunapitchuk Limited. Notice of the decision will also be published four times in Tundra Drums.

DATES: The time limits for filing an appeal are:

1. Any party claiming a property interest which is adversely affected by the decision shall have until February 17, 2009 to file an appeal.

2. Parties receiving service of the decision by certified mail shall have 30 days from the date of receipt to file an appeal.

Parties who do not file an appeal in accordance with the requirements of 43 CFR Part 4, Subpart E, shall be deemed to have waived their rights.

ADDRESSES: A copy of the decision may be obtained from: Bureau of Land Management, Alaska State Office, 222 West Seventh Avenue, #13, Anchorage, Alaska 99513–7504.

FOR FURTHER INFORMATION CONTACT: The Bureau of Land Management by phone at 907–271–5960, or by e-mail at *ak.blm.conveyance@ak.blm.gov.* Persons who use a telecommunication device (TTD) may call the Federal Information Relay Service (FIRS) at 1–800–877–8330, 24 hours a day, seven days a week, to contact the Bureau of Land Management.

Charmain McMillan,

Land Law Examiner, Land Transfer Adjudication II.

[FR Doc. E9–871 Filed 1–15–09; 8:45 am]

BILLING CODE 4310–JA–P

DEPARTMENT OF THE INTERIOR

Bureau of Land Management

[CO–921; COC–70538; CO–130; COC 69290]

Notice of Availability of the Draft Environmental Impact Statement for the Proposed Red Cliff Coal Mine and Associated Surface Facilities Including a Railroad Spur Line COC 69290, and Federal Coal Lease by Application COC 70538, in Garfield and Mesa Counties, CO

AGENCY: Bureau of Land Management, Interior.

ACTION: Notice of availability.

SUMMARY: The Bureau of Land Management (BLM), Colorado State Office, Lakewood, Colorado, hereby gives notice that a public hearing will be held to receive comments on the Draft Environmental Impact Statement (DEIS), Maximum Economic Recovery (MER) and Fair Market Value (FMV) of Federal

coal to be offered. An application for coal lease was filed by CAM-Colorado, LLC (CAM) on September 12, 2006. As a result, the BLM offers for competitive lease 14,466 acres of Federal coal in Garfield County, Colorado.

In accordance with the National Environmental Policy Act of 1969 (NEPA) and the Federal Land Policy and Management Act of 1976, the BLM has prepared a DEIS for the proposed Red Cliff Mine, located near Loma, Colorado. The DEIS responds to Right-of-Way (ROW) Applications for a railroad spur and associated mine facilities on Federal Lands, and an electrical transmission line. In addition, a Federal Coal Lease by Application (LBA) was submitted by CAM-Colorado, on September 12, 2006. The BLM is providing this notice to announce the availability of the Red Cliff Mine DEIS, the proposed LBA, and the public hearing requesting comments on the DEIS, MER and FMV, pursuant to 40 CFR 1503.1 and 43 CFR 3425.4.

The Environmental Impact Statement (EIS) is being prepared in cooperation with the Office of Surface Mining Reclamation and Enforcement (OSM); U.S. Army Corps of Engineers (USACE); the Colorado Department of Natural Resources; the Colorado Division of Reclamation, Mining and Safety (CDRMS); the Colorado Division of Wildlife (CDOW); and Garfield and Mesa counties.

The EIS analyzes the development of surface facilities for coal mining associated with CAM's proposed underground Red Cliff Mine, including roads, a water pipeline, electric transmission line, conveyers, coal stockpile and waste disposal areas, a coal preparation plant, the mine portal, other administrative and operations facilities, and a railroad spur line that will connect to the existing Union Pacific Railroad line near Mack, Colorado. The EIS also considers the effects of extracting coal from CAM's existing Federal coal leases, defined as logical mining unit COC–57198, and issuance of an adjoining Federal coal LBA COC–070538. This notice announces the opening of the public comment period for the DEIS.

DATES: Written comments on the DEIS, MER, and FMR will be accepted for 60 calendar days following the date that the Environmental Protection Agency publishes a NOA in the **Federal Register**. The public hearing will be held at a date, time and location to be announced in the local media, displayed on the Web site *http://www.blm.gov/rmp/co/redcliffmine/,* or obtained by calling the BLM Grand Junction Field Office at 970–244–3000, Monday through Friday between 7:30 a.m. and 4:30 p.m. Mountain Standard Time (MST).

ADDRESSES: You may submit comments by any of the following methods:

- *Web site: http://www.blm.gov/rmp/co/redcliffmine/.*
- *E-mail: RedCliffMineEIS@urscorp.com.*
- *Fax:* 303 239–3808.
- *Mail:* Glenn Wallace, BLM, 2850 Youngfield Street, Lakewood, CO 80215.

Please note that public comments and information submitted, including names, street addresses, and e-mail addresses of respondents, will be available for public review and disclosure at the above address during regular business hours (8 a.m. to 4 p.m.), Monday through Friday, except holidays. Before including your address, phone number, e-mail address, or other personal identifying information in your comment, please be aware that your entire comment, including your personal identifying information, may be made publicly available at any time. While you can request in your comment to withhold your personal identifying information from public review, we cannot guarantee that we will be able to do so. Comments and responses to comments will be published as part of the Final EIS. Copies of the DEIS for the Proposed Red Cliff Coal Mine are available at the Web site *http://www.blm.gov/rmp/co/redcliffmine/.* A limited number of printed copies of the DEIS and copies of the DEIS on compact disk are available at the BLM Grand Junction Field Office, located at 2815 H Road, Grand Junction, Colorado 81506, and at the Colorado State Office public 2850 Youngfield Street, Lakewood, Colorado 80215. In addition, a printed copy of the DEIS is available for review at the Fruita Branch Library at 325 E. Aspen Avenue, in Fruita, Colorado and at the Mesa County Central Library at 530 Grand Avenue, in Grand Junction, Colorado.

FOR FURTHER INFORMATION CONTACT: Glenn Wallace, 303–239–3736, *glenn_wallace@blm.gov*, or by mail at 2850 Youngfield Street, Lakewood, CO 80215.

SUPPLEMENTARY INFORMATION: The BLM, Colorado State Office, Lakewood, Colorado, hereby gives notice of the public hearing at a date, time and location to be announced in the local media, displayed on the Web site *http://www.blm.gov/rmp/co/redcliffmine/,* or obtained by calling the BLM Grand Junction Field Office, 970–244–3000, Monday through Friday between 7:30 a.m. and 4:30 p.m. Mountain Standard Time (MST).

The BLM proposes to offer for competitive lease Federal coal in the lands described as:

T. 7 S, R. 101 W., 6th P.M. Colorado
- Sec. 7, SE¼SE¼, lot 8
- Sec. 8, S½SW¼, NE¼SW¼, SE¼
- Sec. 16, TR 43, Lots 5 and 6
- Sec. 17, All
- Sec. 18, E½E½, Lots 5 to 8 inclusive
- Sec. 19, E½E½, Lots 5 to 8 inclusive
- Sec. 20, All
- Sec. 21, E½, S½NW¼, SW¼, Lots 1 and 2
- Sec. 28, N½, SW¼, W½SE¼, NE¼SE¼
- Sec. 29, All
- Sec. 30, TR 44, Lots 5 to 10 inclusive
- Sec. 31, Lots 5 to 8 inclusive
- Sec. 32, NE¼, N½NW¼, Lots 1 to 4 inclusive
- Sec. 33, NW¼, Lots 3 and 4

T. 8 S., R. 101 W. 6th P.M. Colorado
- Sec. 4, Lot 8
- Sec. 5, S½, Lots 5 to 20 inclusive
- Sec. 6, SE¼, Lots 8 to 27 inclusive
- Sec. 7, E½, E½W½, Lots 5 to 8 inclusive
- Sec. 8, All

T. 7 S., R., 102 W., 6th P.M. Colorado
- Sec. 13, S½NW¼, SW¼, SW¼NE¼, W½SE¼, Lots 2 to 4 inclusive
- Sec. 14, S½N½, S½
- Sec. 23, E½, NW¼, E½SW¼, Lots 1 and 4
- Sec. 24, W½E½, W½, Lots 1 to 4 inclusive
- Sec. 25, W½E½, W½, Lots 1 to 4 inclusive
- Sec. 26, All
- Sec. 35, All
- Sec. 36, W½E½, W½, Lots 1 to 4 inclusive

T. 8 S., R. 102 W., 6th P.M. Colorado
- Sec. 1, S½, Lots 5 to 20 inclusive
- Sec. 12, N½, SE¼

Containing approximately 14,466 acres in Garfield County, Colorado.

The public hearing described above is for the purpose of soliciting public input regarding the MER and FMV of the proposed coal lease.

The proposed Red Cliff Mine is located approximately 11 miles north of the towns of Mack and Loma, Colorado, and 1.5 miles east of State Highway (SH) 139. CAM is proposing a new mine portals and associated facilities to extract low-sulfur coal from Federal coal leases C–0125515, C–0125516 and C–0125439 (defined collectively as logical mining unit COC–57198), from LBA COC 070538 filed September 12, 2006, as well as a small amount of private coal. CAM proposes to locate surface facilities on existing and potential new coal leases with the majority of the surface facilities located off-lease on BLM administered public lands within the boundaries of the proposed ROW (approximately 1,140 acres). These facilities will include, but not be limited to, a waste rock pile, railroad loop, unit train loadout, a coal conveyor, storage and equipment yards, sewage treatment plant, water tank, fuel oil storage and

various buildings. County Road (CR) X will be upgraded to serve as the mine access road from SH 139. The railroad spur will be located on BLM and private lands, with the railroad connecting to the existing Union Pacific Railroad (UPRR) near Mack, Colorado. The proposed railroad will traverse approximately 9.5 miles of BLM administered public land and approximately 5 miles of private land. A water diversion will be constructed in Mack Wash and the water pipeline will follow the proposed railroad spur. The railroad spur would serve only the Red Cliff Mine for the purpose of transporting coal to market. CAM will own the railroad spur, but the trains using the spur will be operated by the UPRR or other railroad companies. The draft EIS discusses BLM's analysis and proposed conclusion that CAM will not operate a common carrier railroad.

Electric power will be needed at the mine to run the underground mining machinery, the conveyor system, and other mine support facilities. The local utility, Grand Valley Power (GVP), has applied to BLM for a ROW to supply the necessary electric power. GVP will need to construct a new 69-kilovolt (kV) transmission line from the Uintah Substation to the mine to supply this power. The transmission line will be approximately 14 miles long, with approximately 7 miles on federally managed lands and 7 miles on private land, depending on which alternative route is chosen. This ROW application is analyzed in the EIS as a connected action as is the LBA filed by CAM (COC–070538) for approximately 11,660 acres adjacent to CAM's existing leases. BLM determined that, if this coal is to be leased, it would be by a competitive bid process. BLM has modified the proposed LBA area to include 14,466 acres.

The EIS analysis area includes a total future lease area of about 23,000 acres which corresponds to the estimated life of the mine.

CAM proposes to conduct underground mining 24 hours per day, 7 days per week, and 365 days per year by room and pillar and longwall mining techniques. CAM's production from the Red Cliff Mine would be up to 8 million tons per year of clean coal depending on market conditions, with an estimated mine life of 30 years.

A mine permit application has been filed for CAM's existing leases in accordance with the OSM and the CDRMS regulations. This EIS will meet the NEPA requirements for the mine permit for the existing Federal coal leases, and is intended to provide necessary information to facilitate the USACE, Colorado Public Utility Commission, and Garfield and Mesa Counties' permitting decisions regarding the project. There will be additional opportunities for public involvement as the mine permit application is processed.

The DEIS analyzes the potential impacts of the proposed action and connected actions and a No-Action alternative. Alternatives to individual project components were considered that were consistent with the purpose and need, which is to mine and transport coal for sale at competitive prices to help supply the energy needs of the United States. Alternatives to project components were included for detailed analysis if they were found to be practical, feasible, reduced environmental impacts, and/or addressed public and agency concerns. A wide range and variety of alternatives were examined, resulting in the following alternative project components that are analyzed in detail: Grade separated railroad crossing at Mesa County Road (CR) M.8; noiseless grade crossings at CR M.8 and CR 10; construction of an electric transmission line along CR 16 crossing BLM and private lands north of the Highline Canal; construction of an electric transmission line along CR 16 to the Highline Canal and then along section lines to avoid as many private land parcels as possible; and construction of an electric transmission line along CR 14 to just north of the Highline Canal and then northwesterly and north to join the proposed railroad alignment east of SH 139.

Required consultations are in progress or have been completed, including consultations with tribal governments and the State Historic Preservation Officer, as required by the National Historic Preservation Act; consultations with the U.S. Fish & Wildlife Service as required by the Endangered Species Act; and consultations with the USACE as required by the Clean Water Act.

Raul Morales,

Grand Junction Associate Field Manager.

[FR Doc. E9–1006 Filed 1–15–09; 8:45 am]

BILLING CODE 4310–$$–P

DEPARTMENT OF THE INTERIOR

Bureau of Land Management

[MT–070–1430–ET; MTM 73404]

Notice of Proposed Withdrawal Extension and Opportunity for Public Meeting; Montana

AGENCY: Bureau of Land Management, Interior.

ACTION: Notice.

SUMMARY: The Bureau of Land Management (BLM) proposes to extend the duration of Public Land Order (PLO) No. 6912 for an additional 20-year term. The PLO withdrew approximately 490 acres of reserved public minerals from location or entry under the United States mining laws for the BLM to protect the archaeological, historical, educational, interpretive, and recreational integrity of the Mount Haggin Prehistoric Quarry Site in Deer Lodge County. This notice also gives an opportunity to comment on the proposed action and to request a public meeting.

DATES: Comments and requests for a public meeting must be received by April 16, 2009.

ADDRESSES: Comments and meeting requests should be sent to the BLM Butte Field Manager, 106 North Parkmont, Butte, Montana 59701.

FOR FURTHER INFORMATION CONTACT: Mary Figarelle, BLM, Butte Field Office, (406) 533–7671, or at the above address, or Sandra Ward, BLM, Montana State Office, (406) 896–5052, or at 5001 Southgate Drive, Billings, Montana 59101–4669.

SUPPLEMENTARY INFORMATION: The withdrawal created by PLO No. 6912 (56 FR 60928 (1991)) will expire November 28, 2011, unless extended. The BLM has filed an application to extend PLO No. 6912 for an additional 20-year period. The withdrawal was made to protect the Mount Haggin Prehistoric Quarry Site on the reserved minerals described as follows:

Principal Meridian, Montana

T. 3 N., R. 11 W.,
Sec. 20, those portions lying east of Highway 274;
Sec. 29, lots 2, 4, 5, 7, and 8, and that portion of lot 6 lying east of Highway 274.

The area described contains approximately 490 acres in Deer Lodge County.

The purpose of the proposed extension is to continue the withdrawal created by PLO No. 6912 for an additional 20-year term to protect the

archaeological, historical, educational, interpretive, and recreational integrity of the Mount Haggin Prehistoric Quarry Site.

As extended, the withdrawal would not alter the applicability of those public land laws governing the use of lands under lease, license, or permit or governing the disposal of the mineral or vegetative resources other than under the mining laws.

The use of a right-of-way or interagency or cooperative agreement would not adequately protect the paleontological resources and capital improvements in these areas.

There are no suitable alternative sites available. Significant cultural resources are located at the quarry site.

Water will not be needed to fulfill the purposes of the withdrawal.

For a period of 90 days from the date of publication of this notice, all persons who wish to submit comments, suggestions, or objections in connection with the proposed withdrawal extension may present their views in writing to the BLM Butte Field Office at the address noted above.

Comments, including names and street addresses of respondents, will be available for public review at the BLM Butte Field Office at the address noted above during regular business hours 7:45 a.m. to 4:30 p.m., Monday through Friday, except holidays. Before including your address, phone number, e-mail address, or other personal identifying information in your comments, be advised that your entire comment—including your personal identifying information—may be made publicly available at any time. While you can ask us in your comment to withhold from public review your personal identifying information, we cannot guarantee that we will be able to do so. Individual respondents may request confidentiality. If you wish to withhold your name or address from public review or from disclosure under the Freedom of Information Act, you must state this prominently at the beginning of your comments. Such requests will be honored to the extent allowed by law. All submissions from organizations or businesses, and from individuals identifying themselves as representatives or officials of organizations or businesses, will be made available for public inspection in their entirety.

Notice is hereby given that an opportunity for a public meeting is afforded in connection with the proposed withdrawal extension. All interested persons who desire a public meeting for the purpose of being heard on the proposed withdrawal extension must submit a written request to the BLM Butte Field Manager within 90 days from the date of publication of this notice. If the authorized officer determines that a public meeting will be held, a notice of the time and place will be published in the **Federal Register** at least 30 days before the scheduled date of the meeting. This withdrawal extension proposal will be processed in accordance with the applicable regulations set forth in 43 CFR 2310.4.

Authority: 43 CFR 2310.3–1.

Dated: January 8, 2009.

Theresa M. Hanley,

Deputy State Director, Division of Resources.

[FR Doc. E9–949 Filed 1–15–09; 8:45 am]

BILLING CODE 4310–$$–P

DEPARTMENT OF THE INTERIOR

Bureau of Land Management

[AK–963–1430–ET; F–14988]

Public Land Order No. 7727; Extension of Public Land Order No. 6706, Alaska

AGENCY: Bureau of Land Management, Interior.

ACTION: Public Land Order.

SUMMARY: This order extends a withdrawal created by Public Land Order No. 6706 for an additional 20-year period. This extension is necessary to continue protection of the United States Air Force Indian Mountain Research Site in Alaska.

DATES: *Effective Date:* January 11, 2009.

FOR FURTHER INFORMATION CONTACT: Terrie D. Evarts, Bureau of Land Management, Alaska State Office, 222 West Seventh Avenue, #13, Anchorage, Alaska 99513–7504; or 907–271–5630.

SUPPLEMENTARY INFORMATION: The withdrawal extended by this order will expire on January 10, 2029, unless, as a result of a review conducted prior to the expiration date pursuant to Section 204(f) of the Federal Land Policy and Management Act of 1976, 43 U.S.C. (2000), the Secretary determines that the withdrawal shall be further extended.

Order

By virtue of the authority vested in the Secretary of the Interior by Section 204 of the Federal Land Policy and Management Act of 1976, 43 U.S.C. 1714 (2000), it is ordered as follows:

Public Land Order No. 6706 (54 FR 979 (1989)), which withdrew 4,606.70 acres of public lands from settlement, sale, location and entry under the general land laws, including the mining and mineral leasing laws, to protect the integrity of the information being monitored by seismic equipment at the United States Air Force Indian Mountain Research Site, is hereby extended for an additional 20-year period until January 10, 2029.

Dated: January 7, 2009.

C. Stephen Allred,

Assistant Secretary—Land and Minerals Management.

[FR Doc. E9–1071 Filed 1–15–09; 8:45 am]

BILLING CODE 4310–JA–P

DEPARTMENT OF THE INTERIOR

Bureau of Land Management

[LLIDT03000–L14300000.EU0000; IDI–36364]

Notice of Realty Action; Proposed Sale of Public Land, Idaho

AGENCY: Bureau of Land Management, Interior.

ACTION: Notice of realty action.

SUMMARY: Two parcels of public land totaling 19.44 acres in Blaine County, Idaho, are being considered for direct sale, under the provisions of the Federal Land Policy Management Act of 1976 (FLPMA), at no less than the appraised fair market value.

DATES: In order to ensure consideration in the environmental analysis of the proposed sale, comments must be received by March 2, 2009.

ADDRESSES: Address all comments concerning this Notice to Tara Hagen, Realty Specialist, Bureau of Land Management (BLM), Shoshone Field Office, 400 West F Street, Shoshone, Idaho 83352.

FOR FURTHER INFORMATION CONTACT: Tara Hagen, Realty Specialist, at the above address or phone at (208) 732–7205.

SUPPLEMENTARY INFORMATION: The following described public land in Blaine County, Idaho, is being considered for sale under the authority of Sections 203 and 209 of the Federal Land Policy and Management Act of 1976 (90 Stat. 2750, 43 U.S.C. 1713):

Boise Meridian

T. 4 N., R. 18 E.,
Sec. 25, Lots 19–21, and 23–24.
The area described contains 19.44 acres in Blaine County.

The 1981 BLM Sun Valley Framework Management Plan, as amended, by the Amendments to Shoshone Field Office Land Use Plans for Land Tenure Adjustment and Areas of Critical Environmental Concern (2003) identifies this parcel of land to be within the adjustment area of land tenure Zone 5. The general management

philosophy of Zone 5 is to allow disposal of public lands through sale or exchange. Sales to private land owners will only be allowed if the tracts are small, isolated parcels generally left from mining patents or a resurvey by the USDI cadastral survey. Conveyance of the identified public land will be subject to valid existing rights and encumbrances of record, including but not limited to, rights-of-way for roads and public utilities. Conveyance of any mineral interests pursuant to Section 209 of the FLPMA will be analyzed during processing of the proposed direct sale.

On January 16, 2009 the above-described land will be segregated from appropriation under the public land laws, including the mining laws, except the sale provisions of the FLPMA. Until completion of the sale, the BLM is no longer accepting land use applications affecting the identified public land, except applications for the amendment of previously-filed right-of-way applications or existing authorizations to increase the term of the grants in accordance with 43 CFR 2807.15 and 2886.15. The segregative effect will terminate upon issuance of a patent, publication in the **Federal Register** of a termination of the segregation, or January 18, 2011 unless extended by the BLM State Director in accordance with 43 CFR 2711.1–2(d) prior to the termination date.

Public Comments: For a period until March 2, 2009, interested parties and the general public may submit in writing any comments concerning the land being considered for sale, including notification of any encumbrances or other claims relating to the identified land, to Field Manager, BLM Shoshone Field Office, at the above address. In order to ensure consideration in the environmental analysis of the proposed sale, comments must be in writing and postmarked or delivered within 45 days of the initial date of publication of this Notice. Comments transmitted via e-mail will not be accepted. Comments, including names and street addresses of respondents, will be available for public review at the BLM Shoshone Field Office during regular business hours, except holidays. Individual respondents may request confidentiality. Before including your address, phone number, e-mail address, or other personal identifying information in your comment, you should be aware that your entire comment—including your personal identifying information—may be made publicly available at any time. While you can ask us in your comment to withhold your personal identifying information from public review, we cannot guarantee that we will be able to do so. If you wish to have your name or address withheld from public disclosure under the Freedom of Information Act, you must state this prominently at the beginning of your comments. Any determination by the BLM to release or withhold the names and/or addresses of those who comment will be made on a case-by-case basis. Such requests will be honored to the extent allowed by law. The BLM will make available for public review, in their entirety, all comments submitted by businesses or organizations, including comments by individuals in their capacity as an official or representative of a business or organization.

Authority: 43 CFR 2711.1–2.

Dated: January 5, 2009.

Lori A. Armstrong,

Shoshone Field Manager.

[FR Doc. E9–915 Filed 1–15–09; 8:45 am]

BILLING CODE 4310–$$–P

DEPARTMENT OF THE INTERIOR

Bureau of Land Management

[LLIDT03000–L14300000.EU0000; IDI–35323]

Notice of Realty Action; Proposed Sale of Public Land, Idaho

AGENCY: Bureau of Land Management, Interior.

ACTION: Notice of realty action.

SUMMARY: A parcel of public land totaling 17 acres in Blaine County, Idaho, is being considered for direct sale, under the provisions of the Federal Land Policy Management Act of 1976 (FLPMA), at no less than the appraised fair market value.

DATES: In order to ensure consideration in the environmental analysis of the proposed sale, comments must be received by March 2, 2009.

ADDRESSES: Address all comments concerning this Notice to Tara Hagen, Realty Specialist, Bureau of Land Management (BLM), Shoshone Field Office, 400 West F Street, Shoshone, Idaho 83352.

FOR FURTHER INFORMATION CONTACT: Tara Hagen, Realty Specialist, at the above address or phone at (208) 732–7205.

SUPPLEMENTARY INFORMATION: The following described public land in Blaine County, Idaho, is being considered for sale under the authority of Sections 203 and 209 of the Federal Land Policy and Management Act of 1976 (90 Stat. 2750, 43 U.S.C. 1713):

Boise Meridian

T. 2 N., R. 18 E.,
Sec. 17, Lots 5–7.

The area described contains 17 acres in Blaine County.

The 1981 BLM Sun Valley Framework Management Plan, as amended, by the Amendments to Shoshone Field Office Land Use Plans for Land Tenure Adjustment and Areas of Critical Environmental Concern (2003) identifies this parcel of land to be within the adjustment area of land tenure Zone 5. The general management philosophy of Zone 5 is to allow disposal of public lands through sale or exchange. Sales to private land owners will only be allowed if the tracts are small, isolated parcels generally left from mining patents or a resurvey by the USDI cadastral survey. Conveyance of the identified public land will be subject to valid existing rights and encumbrances of record, including but not limited to, rights-of-way for roads and public utilities. Conveyance of any mineral interests pursuant to Section 209 of the FLPMA will be analyzed during processing of the proposed direct sale.

On January 16, 2009 the above-described land will be segregated from appropriation under the public land laws, including the mining laws, except the sale provisions of the FLPMA. Until completion of the sale, the BLM is no longer accepting land use applications affecting the identified public land, except applications for the amendment of previously-filed right-of-way applications or existing authorizations to increase the term of the grants in accordance with 43 CFR 2807.15 and 2886.15. The segregative effect will terminate upon issuance of a patent, publication in the **Federal Register** of a termination of the segregation, or January 18, 2011 unless extended by the BLM State Director in accordance with 43 CFR 2711.1–2(d) prior to the termination date.

Public Comments: For a period until March 2, 2009, interested parties and the general public may submit in writing any comments concerning the land being considered for sale, including notification of any encumbrances or other claims relating to the identified land, to Field Manager, BLM Shoshone Field Office, at the above address. In order to ensure consideration in the environmental analysis of the proposed sale, comments must be in writing and postmarked or delivered within 45 days of the initial date of publication of this Notice. Comments transmitted via e-mail will not be accepted. Comments, including

names and street addresses of respondents, will be available for public review at the BLM Shoshone Field Office during regular business hours, except holidays. Individual respondents may request confidentiality. Before including your address, phone number, e-mail address, or other personal identifying information in your comment, you should be aware that your entire comment—including your personal identifying information—may be made publicly available at any time. While you can ask us in your comment to withhold your personal identifying information from public review, we cannot guarantee that we will be able to do so. If you wish to have your name or address withheld from public disclosure under the Freedom of Information Act, you must state this prominently at the beginning of your comments. Any determination by the BLM to release or withhold the names and/or addresses of those who comment will be made on a case-by-case basis. Such requests will be honored to the extent allowed by law. The BLM will make available for public review, in their entirety, all comments submitted by businesses or organizations, including comments by individuals in their capacity as an official or representative of a business or organization.

Authority: 43 CFR 2711.1–2.

Dated: January 5, 2009.

Lori A. Armstrong,

Shoshone Field Manager.

[FR Doc. E9–916 Filed 1–15–09; 8:45 am]

BILLING CODE 4310–$$–P

DEPARTMENT OF THE INTERIOR

National Park Service

Notice of Availability of Draft General Management Plan/Environmental Impact Statement for the Jefferson National Expansion Memorial, Missouri

AGENCY: Department of the Interior, National Park Service.

ACTION: Notice of Availability of Draft General Management Plan/ Environmental Impact Statement for the Jefferson National Expansion Memorial, Missouri.

SUMMARY: Pursuant to Section 102(2)(C) of the National Environmental Policy Act of 1969, 42 U.S.C. 4332(2)(c), the National Park Service (NPS) announces the availability of a draft General Management Plan/Environmental Impact Statement (GMP/EIS) for the Jefferson National Expansion Memorial (Memorial), Missouri.

DATES: The draft GMP/EIS will remain available for public review for 60 days following the publishing of the notice of availability in the **Federal Register** by the U.S. Environmental Protection Agency. Public meetings will be held during the 60-day review period on the GMP/EIS in St. Louis, Missouri, early in 2009. Specific dates and locations will be announced in local and regional media sources of record and on the Memorial's Web site.

You may submit your comments by any one of several methods. You may comment via the Internet through the Memorial Web site at *http://www.nps.gov/jeff*; simply click on the link to the GMP/EIS. You may also comment via the Internet through the NPS Planning, Environment, and Public Comment Web site at *http://parkplanning.nps.gov*; simply click on the link to the Jefferson National Expansion Memorial. You may mail comments to Superintendent Bradley, Jefferson National Expansion Memorial, 11 North 4th Street, St. Louis, Missouri 63102. Finally, you may hand-deliver comments to the Memorial headquarters at the address above.

ADDRESSES: Copies of the draft GMP/EIS are available from the Superintendent, Jefferson National Expansion Memorial, 11 North 4th Street, St. Louis, Missouri 63102.

SUPPLEMENTARY INFORMATION: This draft GMP/EIS will guide the management of the Memorial for the next 25 years. The preferred alternative, two other action alternatives, and a no action alternative are fully analyzed as part of the draft GMP/EIS.

The preferred alternative, Alternative 3—Program Expansion, calls for revitalizing the Memorial by expanding programming, facilities and partnerships. A design competition would be held to generate ideas for programmatic revitalization of the Memorial grounds in an area bounded by the North and South Reflecting Ponds, Memorial Drive, Washington Avenue, Poplar Street, and Luther Ely Smith Square. The look of the Memorial grounds could be changed as long as changes are compatible with and respectful of the status as a National Historic Landmark. The final design entries will undergo environmental and historic preservation review by the NPS, prior to final approval by the Agency.

FOR FURTHER INFORMATION CONTACT: Contact Superintendent Bradley, Jefferson National Expansion Memorial, at the address or telephone number above.

Before including your address, telephone number, electronic mail address, or other personal identifying information in your comments, you should be aware that your entire comment (including your personal identifying information) may be made publicly available at any time. While you can ask us in your comments to withhold your personal identifying information from public review, we cannot guarantee that we will be able to do so. We will make all submissions from organizations or businesses, from individuals identifying themselves as representatives or officials, of organizations or businesses, available for public inspection in their entirety.

Dated: December 15, 2008.

Ernest Quintana,

Regional Director, Midwest Region.

[FR Doc. E9–824 Filed 1–15–09; 8:45 am]

BILLING CODE 4310–70–P

DEPARTMENT OF LABOR

Employee Benefits Security Administration

[Exemption Application No. D–11467]

Withdrawal of Notice of Proposed Exemption Involving the Merritts Antiques, Inc. Employees Pension Plan (Plan); Located in Douglasville, PA

In the **Federal Register** dated September 3, 2008 (73 FR 51525), the Department of Labor (the Department) published a notice of proposed exemption (the Notice) from the prohibited transaction restrictions of the Employee Retirement Income Security Act of 1974 and from certain taxes imposed by the Internal Revenue Code of 1986. The Notice, for which relief has been requested, concerned the sale of real property from the Plan (the Property) to its sponsoring employer Merritts Antiques, Inc. (the Applicant). By letter dated August 29, 2008, the Applicant informed the Department that it wished to withdraw the Notice because the Property had been sold to a third party buyer.

Accordingly, the Notice is hereby withdrawn.

Signed at Washington, DC, this 13th day of January, 2009.

Ivan L. Strasfeld,

Director of Exemption Determinations, Employee Benefits Security Administration, U.S. Department of Labor.

[FR Doc. E9–961 Filed 1–15–09; 8:45 am]

BILLING CODE 4510–29–P

DEPARTMENT OF LABOR

Employment and Training Administration

Notice of Renewal of the Advisory Committee on Apprenticeship (ACA) Charter

AGENCY: Employment and Training Administration, Labor.

ACTION: Renewal of the Advisory Committee on Apprenticeship (ACA) Charter.

SUMMARY: Notice is hereby given of the renewal of a national advisory committee on apprenticeship that is necessary and in the public interest. Accordingly, the U.S. Department of Labor, the Employment and Training Administration has renewed the Advisory Committee on Apprenticeship Charter for two years and has made changes to the terms of members.

SUPPLEMENTARY INFORMATION:

Background

The Advisory Committee on Apprenticeship (ACA) is an advisory group to the Secretary of Labor, whose objective is to make recommendations on how to strengthen the Registered Apprenticeship system. The Charter is required to be renewed every two years; the current Charter expires February 20, 2009. The committee's recommendations and accomplishments have and continue to help ETA and the Secretary to transform and expand the apprenticeship model. The current Charter is being renewed with changes to the terms of members.

Summary of Revisions

The Charter is amended to better clarify the Secretary's authority to reappoint Committee members prior to the expiration of their terms. We have added introductory language to state that ''to the extent practicable, members shall be appointed according to the terms of this section. However, all Committee members shall serve at the pleasure of the Secretary and members may be appointed, reappointed, and/or replaced, and their terms may be extended, changed, or terminated as the Secretary sees fit.''

In addition, the 2007 Charter states that '' * * * the expiration date of the 2-year terms shall coincide with the termination of the Charter, and the 1-year terms shall expire one month prior to the termination of the Charter.'' For clarity in the language, and appropriate termination of membership terms, this section was revised to read: ''* * * When the Charter is renewed prior to its expiration date, the terms will continue for the period specified in the invitation unless either the term or the Charter is terminated by the Secretary. When the Charter is not renewed prior to its expiration date, the terms offered under that Charter shall expire upon termination of the Charter.'' Finally, we have made a few grammatical corrections to this section.

FOR FURTHER INFORMATION CONTACT: Mr. John V. Ladd, Administrator, Office of Apprenticeship, Employment and Training Administration, U.S. Department of Labor, Room N–5311, 200 Constitution Avenue, NW., Washington, DC 20210. Telephone: (202) 693–2796, (this is not a toll-free number).

Signed at Washington, DC, this twelfth day of January, 2009.

Brent R. Orrell,

Deputy Assistant Secretary for Employment and Training Administration.

[FR Doc. E9–842 Filed 1–15–09; 8:45 am]

BILLING CODE 4510–FR–P

NATIONAL AERONAUTICS AND SPACE ADMINISTRATION

[Notice: 09–006]

Notice of Information Collection Under OMB Review

AGENCY: National Aeronautics and Space Administration (NASA).

ACTION: Notice of information collection under OMB review.

SUMMARY: The National Aeronautics and Space Administration, as part of its continuing effort to reduce paperwork and respondent burden, invites the general public and other Federal agencies to take this opportunity to comment on proposed and/or continuing information collections, as required by the Paperwork Reduction Act of 1995 (Pub. L. 104–13, 44 U.S.C. 3506(c)(2)(A)).

DATES: All comments should be submitted within 30 calendar days from the date of this publication.

ADDRESSES: All comments should be addressed to Jasmeet Seehra, Desk Officer for NASA; Office of Information and Regulatory Affairs; Room 10236; New Executive Office Building; Washington, DC 20503.

FOR FURTHER INFORMATION CONTACT: Requests for additional information or copies of the information collection instrument(s) and instructions should be directed to Dr. Walter Kit, NASA Clearance Officer, NASA Headquarters, 300 E Street SW., JB0000, Washington, DC 20546, (202) 358–1350, *Walter.Kit-1@nasa.gov.*

SUPPLEMENTARY INFORMATION:

I. Abstract

NASA needs to collect racial and ethnic data information from on-line job applicants to determine if NASA's recruitment efforts are reaching all segments of the country, as required by Federal law.

II. Method of Collection

NASA will utilize a Web-based application form with instructions and other application materials also on-line. All data will be collected via this Web-based application (separate under graduate and graduate forms) and unless the user chooses to download the application form and other application materials and mail them in.

NASA will utilize an on-line job application system to collect information. There is no other information technology application available to reduce applicant burden.

III. Data

Title: NASA Voluntary On-Line Job Applicant Racial and Ethnic Data Collection

OMB Number: 2700–XXXX.

Type of review: New Collection.

Affected Public: Individuals or households.

Estimated Number of Respondents: 40,000.

Estimated Number of Responses per Respondent: 1.

Estimated Time per Response: 0.083 hour.

Estimated Total Annual Burden Hours: 3334 hours.

Estimated Total Annual Cost: $0.00.

IV. Request for Comments

Comments are invited on: (1) Whether the proposed collection of information is necessary for the proper performance of the functions of NASA, including whether the information collected has practical utility; (2) the accuracy of NASA's estimate of the burden (including hours and cost) of the proposed collection of information; (3) ways to enhance the quality, utility, and clarity of the information to be collected; and (4) ways to minimize the burden of the collection of information on respondents, including automated collection techniques or the use of other forms of information technology.

Comments submitted in response to this notice will be summarized and included in the request for OMB approval of this information collection.

They will also become a matter of public record.

Dr. Walter Kit,

NASA Clearance Officer.

[FR Doc. E9–869 Filed 1–15–09; 8:45 am]

BILLING CODE 7510–13–P

NUCLEAR REGULATORY COMMISSION

[Docket Nos.: 50–327, 50–328; License Nos.: DPR–77, DPR–79; EA–08–211; NRC–2009–0006]

In the Matter of Tennessee Valley Authority, Sequoyah Nuclear Plant; Confirmatory Order (Effective Immediately)

I

Tennessee Valley Authority (TVA or Licensee) is the holder of Operating License Nos. DPR–77 and DPR–79, issued by the Nuclear Regulatory Commission (NRC or Commission) pursuant to 10 CFR Part 50 on September 17, 1980, and September 15, 1981, respectively. The license authorizes the operation of Sequoyah Nuclear Plant, Units 1 and 2, (Sequoyah or facility) in accordance with conditions specified therein. The facility is located on the Licensee's site in Soddy-Daisy, Tennessee.

This Confirmatory Order is the result of an agreement reached during an alternative dispute resolution (ADR) mediation session conducted on September 22, 2008.

II

On April 18, 2008, the NRC's Office of Investigations (OI) completed an investigation (OI Case No. 2–2007–025) regarding activities at the Sequoyah Nuclear Plant. Based on the evidence developed during the investigation, the NRC staff concluded that on May 31, 2007, a contract security sergeant at Sequoyah deliberately falsified an equipment inventory form, and caused TVA to be in apparent violation of NRC and licensee requirements, including 10 CFR 50.9(a), Completeness and Accuracy of Information, the Sequoyah Physical Security Plan, and implementing procedure NSDP–26, Weapons Accountability. The results of the investigation were sent to TVA in a letter dated August 15, 2008.

III

On September 22, 2008, the NRC and TVA met in an ADR session mediated by a professional mediator, arranged through Cornell University's Institute on Conflict Resolution. ADR is a process in which a neutral mediator with no decision-making authority assists the parties in reaching an agreement or resolving any differences regarding their dispute. This confirmatory order is issued pursuant to the agreement reached during the ADR process. The elements of the agreement consist of the following:

1. The NRC and TVA agreed that a contract security supervisor at Sequoyah failed to conduct an adequate inventory of security equipment. To conceal the inadequate inventory, the supervisor deliberately destroyed the record of the inventory, and falsified a newly created record that replaced the destroyed document. These actions placed TVA in violation of 10 CFR 50.9(a), the Sequoyah Physical Security Plan, and Sequoyah Procedure NSDP–26.

2. Based on TVA's review of the incident and NRC concerns with respect to precluding recurrence of the violation, TVA agreed to corrective actions and enhancements, as fully delineated in Section V of the Confirmatory Order.

3. At the ADR session, the NRC and TVA agreed that the above elements involving the violation, and TVA's corrective actions and enhancements as delineated in Section V, will be incorporated into a Confirmatory Order. The resulting Confirmatory Order will beconsidered by the NRC for any assessment of Sequoyah, as appropriate.

4. In consideration of the commitments delineated in Section V of this Confirmatory Order, the NRC agreed to refrain from proposing a civil penalty or issuing a Notice of Violation for all matters discussed in the NRC's letter to TVA of August 15, 2008 (EA–08–211).

5. This agreement is binding upon successors and assigns of the Sequoyah Nuclear Plant and TVA.

On December 12, 2008, the Licensee consented to issuance of this Order with the commitments, as described in Section V below. The Licensee further agreed that this Order is to be effective upon issuance and that it has waived its right to a hearing.

IV

Since the licensee has agreed to take actions to address the violation as set forth in Section III above, the NRC has concluded that its concerns can be resolved through issuance of this Order.

I find that the Licensee's commitments as set forth in Section V are acceptable and necessary and conclude that with these commitments the public health and safety are reasonably assured. In view of the foregoing, I have determined that public health and safety require that the Licensee's commitments be confirmed by this Order. Based on the above and the Licensee's consent, this Order is immediately effective upon issuance.

V

Accordingly, pursuant to Sections 104b, 161b, 161i, 161o, 182 and 186 of the Atomic Energy Act of 1954, as amended, and the Commission's regulations in 10 CFR 2.202 and 10 CFR Part 50, *It is hereby ordered*, effective immediately, that License Nos. DPR–77 and DPR–79 are modified as follows:

a. TVA will ensure that site security procedures for all TVA nuclear sites are revised such that original documents required to be maintained by site security procedures are not destroyed, and are retained in accordance with regulatory requirements.

b. As part of first line supervisory training for security supervisors, TVA will provide fleet-wide training related to Civil Treatment/Ethics, Roles of the Supervisor, Communication in the Workplace, Standards of Conduct, Coaching and Counseling Employees, Operational Issues and Operating Experience, Leadership, Administration, Client Interface/Service, Regulatory Reporting Requirements, Safety, and Security Observation Program. Upon completion of TVA's transition to an in-house security force, TVA will ensure that security supervisors receive training consistent with first line supervisors in other disciplines.

c. TVA will ensure that security personnel at all TVA nuclear sites receive annual training on the use of TVA's internal programs for resolution of issues/deficiencies (e.g., Corrective Action Program, Employees Concerns Program), consistent with training received by TVA personnel requiring unescorted access to the TVA nuclear sites.

d. Beginning within 30 days of the issuance of this Confirmatory Order, TVA will conduct a minimum of 15 observations of Sequoyah security activities each month, until TVA transitions to an in-house security force.

e. TVA agrees to complete items V.a through V.d above no later than September 30, 2009.

f. During TVA's transition to an in-house security force, each TVA nuclear site will conduct meetings at a minimum of twice each month with the security contractor, to monitor the status of corrective actions associated with the Security Independent Evaluation referenced below.

g. TVA will assess the effectiveness of the corrective actions and enhancements identified in its Security Independent Evaluation, and the results

of this follow-up assessment will be factored into the TVA Corrective Action Program. TVA agrees to complete the assessment of the effectiveness of the corrective actions and enhancements no later than June 30, 2010.

h. Upon completion of the terms of the Confirmatory Order, TVA will provide the NRC with a letter discussing its basis for concluding that the Order has been satisfied.

The Regional Administrator, NRC Region II, may relax or rescind, in writing, any of the above conditions upon a showing by TVA of good cause.

VI

Any person adversely affected by this Confirmatory Order, other than the Licensee, may request a hearing within 20 days of its issuance. Where good cause is shown, consideration will be given to extending the time to request a hearing. A request for extension of time must be directed to the Director, Office of Enforcement, U.S. Nuclear Regulatory Commission, Washington, DC 20555–0001, and include a statement of good cause for the extension.

If a person other than TVA requests a hearing, that person shall set forth with particularity the manner in which his interest is adversely affected by this Order and shall address the criteria set forth in 10 CFR 2.309 (d) and (f).

If a hearing is requested by a person whose interest is adversely affected, the Commission will issue an Order designating the time and place of any hearing. If a hearing is held, the issue to be considered at such hearing shall be whether this Confirmatory Order should be sustained.

A request for a hearing must be filed in accordance with the NRC E-Filing rule, which became effective on October 15, 2007. The NRC E-filing Final Rule was issued on August 28, 2007 (72 FR 49,139) and was codified in pertinent part at 10 CFR Part 2, Subpart B. The E-Filing process requires participants to submit and serve documents over the internet or, in some cases, to mail copies on electronic optical storage media. Participants may not submit paper copies of their filings unless they seek a waiver in accordance with the procedures described below.

To comply with the procedural requirements associated with E-Filing, at least five (5) days prior to the filing deadline the requestor must contact the Office of the Secretary by e-mail at *HEARINGDOCKET@NRC.GOV*, or by calling (301) 415–1677, to request (1) a digital ID certificate, which allows the participant (or its counsel or representative) to digitally sign documents and access the E-Submittal server for any NRC proceeding in which it is participating; and/or (2) creation of an electronic docket for the proceeding (even in instances when the requestor (or its counsel or representative) already holds an NRC-issued digital ID certificate). Each requestor will need to download the Workplace Forms Viewer™ to access the Electronic Information Exchange (EIE), a component of the E-Filing system. The Workplace Forms Viewer™ is free and is available at *http://www.nrc.gov/site-help/e-submittals/install-viewer.html*. Information about applying for a digital ID certificate also is available on NRC's public Web site at *http://www.nrc.gov/site-help/e-submittals/apply-certificates.html*. Once a requestor has obtained a digital ID certificate, had a docket created, and downloaded the EIE viewer, it can then submit a request for a hearing through EIE. Submissions should be in Portable Document Format (PDF) in accordance with NRC guidance available on the NRC public Web site at *http://www.nrc.gov/site-help/e-submittals.html*. A filing is considered complete at the time the filer submits its document through EIE. To be timely, electronic filings must be submitted to the EIE system no later than 11:59 p.m. Eastern Time on the due date. Upon receipt of a transmission, the E-Filing system time-stamps the document and sends the submitter an e-mail notice confirming receipt of the document. The EIE system also distributes an e-mail notice that provides access to the document to the NRC Office of the General Counsel and any others who have advised the Office of the Secretary that they wish to participate in the proceeding, so that the filer need not serve the document on those participants separately. Therefore, any others who wish to participate in the proceeding (or their counsel or representative) must apply for and receive a digital ID certificate before a hearing request is filed so that they may obtain access to the document via the E-Filing system.

A person filing electronically may seek assistance through the ''Contact Us'' link located on the NRC Web site at *http://www.nrc.gov/site-help/e-submittals.html* or by calling the NRC technical help line, which is available between 8:30 a.m. and 4:15 p.m., Eastern Time, Monday through Friday. The help line number is (800) 397–4209 or locally, (301) 415–4737.

Participants who believe that they have good cause for not submitting documents electronically must file a motion, in accordance with 10 CFR 2.302(g), with their initial paper filing requesting authorization to continue to submit documents in paper format. Such filings must be submitted by (1) first class mail addressed to the Office of the Secretary of the Commission, U.S. Nuclear Regulatory Commission, Washington, DC 20555–0001, Attention: Rulemaking and Adjudications Staff; or (2) courier, express mail, or expedited delivery service to the Office of the Secretary, Sixteenth Floor, One White Flint North, 11555 Rockville Pike, Rockville, Maryland 20852, Attention: Rulemaking and Adjudications Staff. Participants filing a document in this manner are responsible for serving the document on all other participants. Filing is considered complete by first-class mail as of the time of deposit in the mail, or by courier, express mail, or expedited delivery service upon depositing the document with the provider of the service.

Documents submitted in adjudicatory proceedings will appear in NRC's electronic hearing docket which is available to the public at *http://ehd.nrc.gov/EHD_Proceeding/home.asp*, unless excluded pursuant to an order of the Commission, an Atomic Safety and Licensing Board, or a Presiding Officer. Participants are requested not to include personal privacy information, such as social security numbers, home addresses, or home phone numbers in their filings. With respect to copyrighted works, except for limited excerpts that serve the purpose of the adjudicatory filings and would constitute a Fair Use application, Participants are requested not to include copyrighted materials in their works.

VII

In the absence of any request for hearing, or written approval of an extension of time in which to request a hearing, the provisions specified in Section V above shall be final 20 days from the date of this Order without further order or proceedings. If an extension of time for requesting a hearing has been approved, the provisions specified in Section V shall be final when the extension expires if a hearing request has not been received. A request for hearing shall not stay the immediate effectiveness of this order.

Dated this 5th day of January 2009.

For the Nuclear Regulatory Commission.

Victor M. McCree,

Deputy Regional Administrator.

[FR Doc. E9–823 Filed 1–15–09; 8:45 am]

BILLING CODE 7590–01–P

NUCLEAR REGULATORY COMMISSION

[NRC–2009–0008]

Final Memorandum of Understanding Between the U.S. Nuclear Regulatory Commission and the Virginia Department of Health

AGENCY: Nuclear Regulatory Commission.

ACTION: Notice.

FOR FURTHER INFORMATION CONTACT: Robert Stransky, Senior Emergency Response Coordinator, Operations Branch, Division of Preparedness and Response, Office of Nuclear Security and Incident Response, U.S. Nuclear Regulatory Commission, Washington, DC 20555. Telephone: (301) 415–6411; fax number: (301) 415–6382; e-mail: *Robert.Stransky@nrc.gov.*

SUPPLEMENTARY INFORMATION:

I. Introduction

This notice is to advise the public of the issuance of a Final Memorandum of Understanding (MOU) between the U.S. Nuclear Regulatory Commission (NRC) and the Virginia Department of Health, an agency of the Commonwealth of Virginia. The MOU provides the basis for mutually agreeable procedures whereby the Virginia Department of Health may utilize the NRC Emergency Response Data System (ERDS) to receive data during an emergency at a commercial nuclear power plant whose 10-mile Emergency Planning Zone lies within the Commonwealth of Virginia.

II. Effective Date

This MOU is effective November 26, 2008.

III. Further Information

Documents related to this action, including the application for amendment and supporting documentation, are available electronically at the NRC's Electronic Reading Room at *http://www.nrc.gov/reading-rm/adams.html.* From this site, you can access the NRC's Agencywide Documents Access and Management System (ADAMS), which provides text and image files of NRC's public documents. The ADAMS accession number for the document related to this notice is: Memorandum of Understanding Between NRC and the VA Department of Health ML 08337043. If you do not have access to ADAMS or if there are problems in accessing the documents located in ADAMS, contact the NRC Public Document Room (PDR) Reference staff at 1–800–397–4209, 301–415–4737 or by e-mail to *pdr@nrc.gov.*

These documents may also be viewed electronically on the public computers located at the NRC's Public Document Room (PDR), O 1 F21, One White Flint North, 11555 Rockville Pike, Rockville, MD 20852. The PDR reproduction contractor will copy documents for a fee.

Dated at Rockville, Maryland this 8th day of January, 2009.

For the Nuclear Regulatory Commission.

William A. Gott,

Chief, Operations Branch, Division of Preparedness and Response, Office of Nuclear Security and Incident Response.

Memorandum of Understanding Pertaining to the Emergency Response Data System Between the U. S. Nuclear Regulatory Commission and the Virginia Department of Health

I. Authority

The U.S. Nuclear Regulatory Commission (NRC) and the Virginia Department of Health (VDH), an agency of the Commonwealth of Virginia, enter into this Memorandum of Understanding (MOU) under the authority of section 274i of the Atomic Energy Act of 1954, as amended.

The Commonwealth of Virginia recognizes the Federal Government, primarily the NRC, as having the exclusive authority and responsibility to regulate the radiological and national security aspects of the construction and operation of nuclear production or utilization facilities, except for certain authority over air emissions granted to States by the Clean Air Act. Nothing in this MOU is intended to restrict or expand the scope of regulatory authority of either the NRC or the Commonwealth of Virginia.

In the Commonwealth of Virginia, the VDH, through its Division of Radiological Health and Safety Regulation (a division within VDH's Office of Epidemiology), is the state radiation control agency and implements the program regulating sources of radiation, not otherwise regulated by the NRC, for the protection of public health and safety. The Virginia Department of Emergency Management (VDEM) administers emergency services and disaster preparedness programs in the Commonwealth of Virginia.

II. Background

A. The Atomic Energy Act of 1954, as amended, and the Energy Reorganization Act of 1974, as amended, authorize the NRC to license and regulate, among other activities, the manufacture, construction, and operation of utilization facilities (nuclear power plants) in order to assure common defense and security and to protect the public health and safety. Under these statutes, the NRC is the agency responsible for regulating nuclear power plant safety.

B. NRC believes that its mission to protect public health and safety can be served by a policy of cooperation with State governments and has formally adopted a policy statement on ''Cooperation with States at Commercial Nuclear Power Plants and Other Nuclear Production or Utilization Facilities'' (54 FR 7530, February 25, 1992). The policy statement provides that NRC will consider State proposals to enter into instruments of cooperation for certain programs when these programs have provisions to ensure close cooperation with NRC. This MOU is intended to be consistent with, and implement the provisions of, the NRC's policy statement.

C. NRC fulfills its statutory mandate to regulate nuclear power plant safety by, among other things, responding to emergencies at licensee facilities and monitoring the status and adequacy of licensees' responses to emergency situations.

D. The Commonwealth of Virginia fulfills, through the VDH and VDEM, its statutory mandate to provide for preparedness, response, mitigation, and recovery in the event of an accident at a nuclear power plant through its statutes located in Titles 32.1 and 44 of the Code of Virginia.

III. Scope

A. This MOU defines the way in which NRC and VDH intend to cooperate in planning and maintaining the capability to transfer reactor plant data via the Emergency Response Data System (ERDS) during emergencies at commercial nuclear power plants in the Commonwealth of Virginia that have implemented an ERDS interface, and for which any portion of the plant's 10-mile Emergency Planning Zone (EPZ) lies within the Commonwealth of Virginia.

B. It is understood by the NRC and the VDH that ERDS data will only be transmitted to the Commonwealth of Virginia during emergencies classified at the Alert level or above, during scheduled tests, or during exercises when available.

C. Nothing in this MOU is intended to restrict or expand the statutory authority of the NRC, the Commonwealth of Virginia, VDH, or VDEM, or to affect or otherwise alter the terms of any agreement in effect under the authority of section 274b of the Atomic Energy Act of 1954, as amended; nor is anything in this MOU intended to restrict or expand the authority of the

Commonwealth of Virginia, VDH, or VDEM, on matters not within the scope of this MOU.

D. Nothing in this MOU confers upon the Commonwealth of Virginia, VDH, or VDEM, the authority to (1) interpret or modify NRC regulations and NRC requirements imposed on the licensee; (2) take enforcement actions; (3) issue confirmatory letters; (4) amend, modify, or revoke a license issued by the NRC; or (5) direct or recommend nuclear power plant employees to take, or not take, any action. Authority for all such actions is reserved exclusively to the NRC.

E. This MOU does not confer any binding obligation or right of action on either party. This MOU does not obligate any funds and is subject to the availability of appropriated funds.

IV. NRC's General Responsibilities

Under this MOU, the NRC will maintain ERDS. ERDS is a system designed to receive, store, and retransmit data from in-plant data systems at nuclear power plants during emergencies. The NRC will provide the Commonwealth of Virginia, up to 10 digital certificates for use by designated personnel within the VDH and VDEM in accessing ERDS data during emergencies at nuclear power plants which have implemented an ERDS interface, and for which any portion of the plant's 10-mile EPZ lies within the Commonwealth of Virginia. The NRC reserves the right to revoke digital certificates at any time.

V. VDH General Responsibilities

A. VDH, through its lead radiological agency, will, in cooperation with the NRC, establish a capability to receive ERDS data. To this end, VDH will provide the necessary computer hardware and commercially licensed software required for ERDS data transfer to users.

B. VDH will provide the NRC with an initial, and periodically updated, list of designated persons serving as holders of ERDS digital certificates.

C. VDH will use ERDS only to access data, at the Alert level or higher, from nuclear power plants for which all or a portion of the 10-mile EPZ falls within the boundaries of the Commonwealth of Virginia.

D. For the purpose of minimizing the impact on plant operators, the Commonwealth of Virginia will seek clarification of ERDS data through the NRC.

VI. Implementation

A. VDH and the NRC agree to work in concert to assure that the following communications and information exchange protocol regarding ERDS are followed:

a. VDH and the NRC agree in good faith to make available to each other information within the intent and scope of this MOU.

b. NRC and VDH agree to meet as necessary to exchange information on matters of common concern pertinent to this MOU. Unless otherwise agreed, such meetings will be held in the NRC Headquarters Operations Center. The affected utilities will be kept informed of pertinent information covered by this MOU.

c. To preclude the premature release of sensitive information, NRC will protect sensitive information to the extent permitted by the Freedom of Information Act, 5 U.S.C. 552, Title 10 of the Code of Federal Regulations, Part 2.790, and all other applicable authority. VDH and its Division of Radiological Health and Safety Regulation will protect sensitive information to the extent permitted by the Virginia Freedom of Information Act (Va-Code Ann. 2.2–3700 through 2.2–3715), and all other applicable authority.

d. NRC will conduct periodic tests of licensee ERDS data links. A copy of the test schedule will be provided to the VDH, through its Division of Radiological Health and Safety Regulation (Virginia's lead radiological agency) by the NRC. The VDH Division of Radiological Health and Safety Regulation may test its ability to access ERDS data during these scheduled tests, or may schedule independent tests of the State link with the NRC.

e. NRC will provide access to ERDS for emergency exercises with reactor units capable of transmitting exercise data to ERDS. For exercises in which the NRC is not participating, the VDH, through its Division of Radiological Health and Safety Regulation will coordinate with the NRC in advance to ensure ERDS availability. NRC reserves the right to preempt ERDS use for any exercise in progress in the event of an actual event at any licensed nuclear power plant.

VII. Contacts

A. The principal senior management contacts for this MOU will be Director, Division of Preparedness and Response, Office of Nuclear Security and Incident Response for the NRC, and the Director, Division of Radiological Health and Safety Regulation for the VDH. These individuals may designate appropriate staff representatives for the purpose of administering this MOU.

B. Identification of these contacts is not intended to restrict communication between NRC and VDH staff members, in particular those within the Division of Radiological Health and Safety Regulation, on technical and other day-to-day activities.

VIII. Resolution of Disagreements

A. If disagreements arise about matters within the scope of this MOU, NRC and the VDH will work together to resolve these differences.

B. Differences between the VDH and NRC staff over issues arising out of this MOU will, if they cannot be resolved in accordance with Section VIII.A, be resolved by the Director of the NRC Division of Preparedness and Response, Office of Nuclear Security and Incident Response.

C. Differences which cannot be resolved in accordance with Sections VIII.A and VIII.B will be reviewed and resolved by the NRC's Director, Office of Nuclear Security and Incident Response.

D. The NRC's General Counsel has the final authority to provide legal interpretation of the Commission's regulations.

IX. Effective Date

This MOU will take effect after it has been signed by both parties.

X. Duration

A formal review, not less than 1 year after the effective date, will be performed by the NRC to evaluate implementation of the MOU and resolve any problems identified. This MOU will be subject to periodic reviews and may be amended or modified upon written agreement by both parties, and may be terminated upon 30 days written notice by either party.

XI. Separability

If any provision(s) of this MOU or the application of any provision(s) to any person or circumstances is held invalid, the remainder of this MOU and the application of such provisions to other persons or circumstances will not be affected.

For the U.S. Nuclear Regulatory Commission.

Martin Virgilio for R. William Borchardt,

Executive Director for Operations.

For the Commonwealth of Virginia, Virginia Department of Health.

Dated: July 9, 2008.

Dr. Carl Armstrong,

Director, Office of Epidemiology, Virginia Department of Health.

[FR Doc. E9–966 Filed 1–15–09; 8:45 am]

BILLING CODE 7590–01–P

NUCLEAR REGULATORY COMMISSION

[NRC–2009–0009]

Final Memorandum of Understanding Between the U.S. Nuclear Regulatory Commission and the State of California

AGENCY: Nuclear Regulatory Commission.

ACTION: Notice.

FOR FURTHER INFORMATION CONTACT: Robert Stransky, Senior Emergency Response Coordinator, Operations Branch, Division of Preparedness and Response, Office of Nuclear Security and Incident Response, U.S. Nuclear Regulatory Commission, Washington, DC 20555. Telephone: (301) 415–6411; fax number: (301) 415–6382; e-mail: *Robert.Stransky@nrc.gov.*

SUPPLEMENTARY INFORMATION:

I. Introduction

This notice is to advise the public of the issuance of a Final Memorandum of Understanding (MOU) between the U.S. Nuclear Regulatory Commission (NRC) and the State of California. The MOU provides the basis for mutually agreeable procedures whereby the State of California may utilize the NRC Emergency Response Data System (ERDS) to receive data during an emergency at a commercial nuclear power plant whose 10-mile Emergency Planning Zone lies within the State of California.

II. Effective Date

This MOU is effective November 26, 2008.

III. Further Information

Documents related to this action, including the application for amendment and supporting documentation, are available electronically at the NRC's Electronic Reading Room at *http://www.nrc.gov/reading-rm/adams.html.* From this site, you can access the NRC's Agencywide Documents Access and Management System (ADAMS), which provides text and image files of NRC's public documents. The ADAMS accession number for the document related to this notice is: Memorandum of Understanding Between the NRC and the State of California, ML083370327. If you do not have access to ADAMS or if there are problems in accessing the documents located in ADAMS, contact the NRC Public Document Room (PDR) Reference staff at 1–800–397–4209, 301–415–4737 or by e-mail to *pdr@nrc.gov.*

These documents may also be viewed electronically on the public computers located at the NRC's Public Document Room (PDR), O 1 F21, One White Flint North, 11555 Rockville Pike, Rockville, MD 20852. The PDR reproduction contractor will copy documents for a fee.

Dated at Rockville, Maryland this 8th day of January, 2009.

For the Nuclear Regulatory Commission.

William A. Gott,

Chief, Operations Branch, Division of Preparedness and Response, Office of Nuclear Security and Incident Response.

Memorandum of Understanding Pertaining to the Emergency Response Data System Between The U.S. Nuclear Regulatory Commission and the State of California

I. Authority

The U.S. Nuclear Regulatory Commission (NRC) and the State of California enter into this Memorandum of Understanding (MOU) under the authority of Section 274i of the Atomic Energy Act of 1954, as amended.

The State of California recognizes the Federal Government, primarily the NRC, as having the exclusive authority and responsibility to regulate the radiological and national security aspects of the construction and operation of nuclear production or utilization facilities, except for certain authority over air emissions granted to States by the Clean Air Act. Nothing in this MOU is intended to restrict or expand the scope of regulatory authority of either the NRC or the State of California.

II. Background

A. The Atomic Energy Act of 1954, as amended, and the Energy Reorganization Act of 1974, as amended, authorize the NRC to license and regulate, among other activities, the manufacture, construction, and operation of utilization facilities (nuclear power plants) in order to assure common defense and security and to protect the public health and safety. Under these statutes, the NRC is the agency responsible for regulating nuclear power plant safety.

B. NRC believes that its mission to protect public health and safety can be served by a policy of cooperation with State governments and has formally adopted a policy statement on ''Cooperation with States at Commercial Nuclear Power Plants and Other Nuclear Production or Utilization Facilities'' (54 FR 7530, February 25, 1992). The policy statement provides that NRC will consider State proposals to enter into instruments of cooperation for certain programs when these programs have provisions to ensure close cooperation with NRC.

This MOU is intended to be consistent with, and implement the provisions of, the NRC's policy statement.

C. NRC fulfills its statutory mandate to regulate nuclear power plant safety by, among other things, responding to emergencies at licensee facilities and monitoring the status and adequacy of licensees' responses to emergency situations.

D. The State of California fulfills its statutory mandate to provide for preparedness, response, mitigation, and recovery in the event of an accident at a nuclear power plant through its statutes located in the California Emergency Services Act, Government Code §§ 8550–8668.

III. Scope

A. This MOU defines the way in which NRC and the State of California intend to cooperate in planning and maintaining the capability to transfer reactor plant data via the Emergency Response Data System (ERDS) during emergencies at commercial nuclear power plants in the State of California that have implemented an ERDS interface, and for which any portion of the plant's 10-mile Emergency Planning Zone (EPZ) lies within the State of California.

B. It is understood by the NRC and the State of California that ERDS data will only be transmitted to the State of California during emergencies classified at the Alert Level or above, during scheduled tests, or during exercises when available.

C. Nothing in this MOU is intended to restrict or expand the statutory authority of the NRC, the State of California, or to affect or otherwise alter the terms of any agreement in effect under the authority of Section 274b of the Atomic Energy Act of 1954, as amended; nor is anything in this MOU intended to restrict or expand the authority of the State of California on matters not within the scope of this MOU.

D. Nothing in this MOU confers upon the State of California the authority to (1) interpret or modify NRC regulations and NRC requirements imposed on the licensee; (2) take enforcement actions; (3) issue confirmatory letters; (4) amend, modify, or revoke a license issued by the NRC; or (5) direct or recommend nuclear power plant employees to take, or not take, any action. Authority for all such actions is reserved exclusively to the NRC.

E. This MOU does not confer any binding obligation or right of action on

either party. This MOU does not obligate any funds and is subject to the availability of appropriated funds.

IV. NRC's General Responsibilities

Under this MOU, the NRC will maintain ERDS. ERDS is a system designed to receive, store, and retransmit data from in-plant data systems at nuclear power plants during emergencies. The NRC will provide the State of California, up to 10 digital certificates for use by State designated personnel in accessing ERDS data during emergencies at nuclear power plants which have implemented an ERDS interface, and for which any portion of the plant's 10-mile EPZ lies within the of State of California. The NRC reserves the right to revoke digital certificates at any time.

V. State of California's General Responsibilities

A. The State of California, through its lead radiological agency, will, in cooperation with the NRC, establish a capability to receive ERDS data. To this end, the State of California will provide the necessary computer hardware and commercially licensed software required for ERDS data transfer to users.

B. The State of California will provide the NRC with an initial, and periodically updated, list of designated persons serving as holders of ERDS digital certificates.

C. The State of California will use ERDS only to access data, at the Alert level or higher, from nuclear power plants for which all or a portion of the 10-mile EPZ falls within its State boundary.

D. For the purpose of minimizing the impact on plant operators, the State of California will seek clarification of ERDS data through the NRC.

VI. Implementation

A. The State of California and the NRC agree to work in concert to assure that the following communications and information exchange protocol regarding ERDS are followed:

a. The State of California and the NRC agree in good faith to make available to each other information within the intent and scope of this MOU.

b. NRC and the State of California agree to meet as necessary to exchange information on matters of common concern pertinent to this MOU. Unless otherwise agreed, such meetings will be held in the NRC Headquarters Operations Center. The affected utilities will be kept informed of pertinent information covered by this MOU.

c. To preclude the premature release of sensitive information, NRC will protect sensitive information to the extent permitted by the Freedom of Information Act, 5 U.S.C. 552, Title 10 of the Code of Federal Regulations, Part 2.790, and all other applicable authority. The State of California will protect sensitive information to the extent permitted by the California Public Records Act, Government Code 6250–6276.48, and all other applicable authority.

d. NRC will conduct periodic tests of licensee ERDS data links. A copy of the test schedule will be provided to the California Department of Public Health, Radiological Health Branch (California's lead radiological agency) by the NRC. The California Department of Public Health, Radiological Health Branch may test its ability to access ERDS data during these scheduled tests, or may schedule independent tests of the State link with the NRC.

e. NRC will provide access to ERDS for emergency exercises with reactor units capable of transmitting exercise data to ERDS. For exercises in which the NRC is not participating, the California Department of Public Health, Radiological Health Branch will coordinate with the NRC in advance to ensure ERDS availability. NRC reserves the right to preempt ERDS use for any exercise in progress in the event of an actual event at any licensed nuclear power plant.

VII. Contacts

A. The principal senior management contacts for this MOU will be Director, Division of Preparedness and Response, Office of Nuclear Security and Incident Response for the NRC, and the Director, Governor's Office of Emergency Services for the State of California. These individuals may designate appropriate staff representatives for the purpose of administering this MOU.

B. Identification of these contacts is not intended to restrict communication between NRC and California Department of Public Health, Radiological Health Branch staff members on technical and other day-to-day activities.

VIII. Resolution of Disagreements

A. If disagreements arise about matters within the scope of this MOU, NRC and the State of California will work together to resolve these differences.

B. Differences between the State of California and NRC staff over issues arising out of this MOU will, if they cannot be resolved in accordance with Section VIII.A, be resolved by the Director of the NRC Division of Preparedness and Response, Office of Nuclear Security and Incident Response.

C. Differences which cannot be resolved in accordance with Sections VIII.A and VIII.B will be reviewed and resolved by the NRC's Director, Office of Nuclear Security and Incident Response.

D. The NRC's General Counsel has the final authority to provide legal interpretation of the Commission's regulations.

IX. Effective Date

This MOU will take effect after it has been signed by both parties.

X. Duration

A formal review, not less than 1 year after the effective date, will be performed by the NRC to evaluate implementation of the MOU and resolve any problems identified. This MOU will be subject to periodic reviews and may be amended or modified upon written agreement by both parties, and may be terminated upon 30 days written notice by either party.

XI. Separability

If any provision(s) of this MOU, or the application of any provision(s) to any person or circumstances is held invalid, the remainder of this MOU and the application of such provisions to other persons or circumstances will not be affected.

For the U.S. Nuclear Regulatory Commission.

Dated: November 26, 2008.

Martin Virgilio for R. William Borchardt,

Executive Director for Operations.

For the State of California.

Dated: September 9, 2008.

Henry Renteria,

Director, Governor's Office of Emergency Services.

[FR Doc. E9–971 Filed 1–15–09; 8:45 am]

BILLING CODE 7590–01–P

NUCLEAR REGULATORY COMMISSION

[NRC–2009–0007]

Final Memorandum of Understanding Between the U.S. Nuclear Regulatory Commission and the State of Missouri

AGENCY: Nuclear Regulatory Commission.

ACTION: Notice.

FOR FURTHER INFORMATION CONTACT: Robert Stransky, Senior Emergency Response Coordinator, Operations Branch, Division of Preparedness and Response, Office of Nuclear Security and Incident Response, U.S. Nuclear

Regulatory Commission, Washington, DC 20555. Telephone: (301) 415–6411; fax number: (301) 415–6382; e-mail: *Robert.Stransky@nrc.gov*.

SUPPLEMENTARY INFORMATION:

I. Introduction

This notice is to advise the public of the issuance of a Final Memorandum of Understanding (MOU) between the U.S. Nuclear Regulatory Commission (NRC) and the State of Missouri. The MOU provides the basis for mutually agreeable procedures whereby the State of Missouri may utilize the NRC Emergency Response Data System (ERDS) to receive data during an emergency at a commercial nuclear power plant whose 10-mile Emergency Planning Zone lies within the State of Missouri.

II. Effective Date

This MOU is effective November 26, 2008.

III. Further Information

Documents related to this action, including the application for amendment and supporting documentation, are available electronically at the NRC's Electronic Reading Room at *http://www.nrc.gov/reading-rm/adams.html*. From this site, you can access the NRC's Agencywide Documents Access and Management System (ADAMS), which provides text and image files of NRC's public documents. The ADAMS accession number for the document related to this notice is: Memorandum of Understanding Between the NRC and the State of Missouri ML083370339. If you do not have access to ADAMS or if there are problems in accessing the documents located in ADAMS, contact the NRC Public Document Room (PDR) Reference staff at 1–800–397–4209, 301–415–4737 or by e-mail to *pdr@nrc.gov*.

These documents may also be viewed electronically on the public computers located at the NRC's Public Document Room (PDR), O 1 F21, One White Flint North, 11555 Rockville Pike, Rockville, MD 20852. The PDR reproduction contractor will copy documents for a fee.

Dated at Rockville, Maryland, this 8th day of January 2009.

For the Nuclear Regulatory Commission.

William A. Gott,

Chief, Operations Branch, Division of Preparedness and Response, Office of Nuclear Security and Incident Response.

Memorandum of Understanding Pertaining to the Emergency Response Data System Between the U.S. Nuclear Regulatory Commission and the State of Missouri

I. Authority

The U.S. Nuclear Regulatory Commission (NRC) and the State of Missouri enter into this Memorandum of Understanding (MOU) under the authority of Section 274i of the Atomic Energy Act of 1954, as amended.

The State of Missouri recognizes the Federal Government, primarily the NRC, as having the exclusive authority and responsibility to regulate the radiological and national security aspects of the construction and operation of nuclear production or utilization facilities, except for certain authority over air emissions granted to States by the Clean Air Act. Nothing in this MOU is intended to restrict or expand the scope of regulatory authority of either the NRC or the State of Missouri.

II. Background

A. The Atomic Energy Act of 1954, as amended, and the Energy Reorganization Act of 1974, as amended, authorize the NRC to license and regulate, among other activities, the manufacture, construction, and operation of utilization facilities (nuclear power plants) in order to assure common defense and security and to protect the public health and safety. Under these statutes, the NRC is the agency responsible for regulating nuclear power plant safety.

B. NRC believes that its mission to protect public health and safety can be served by a policy of cooperation with State governments and has formally adopted a policy statement on ''Cooperation with States at Commercial Nuclear Power Plants and Other Nuclear Production or Utilization Facilities'' (54 FR 7530, February 25, 1992). The policy statement provides that NRC will consider State proposals to enter into instruments of cooperation for certain programs when these programs have provisions to ensure close cooperation with NRC. This MOU is intended to be consistent with, and implement the provisions of, the NRC's policy statement.

C. NRC fulfills its statutory mandate to regulate nuclear power plant safety by, among other things, responding to emergencies at licensee facilities and monitoring the status and adequacy of the licensees' responses to emergency situations.

D. The State of Missouri fulfills its statutory mandate to provide for preparedness, response, mitigation, and recovery in the event of an accident at a nuclear power plant through its statutes located in Chapter 44, Revised Statutes of Missouri, the State Emergency Operations Plan, and Executive Order No. 79–19.

III. Scope

A. This MOU defines the way in which NRC and the State of Missouri intend to cooperate in planning and maintaining the capability to transfer reactor plant data via the Emergency Response Data System (ERDS) during emergencies at commercial nuclear power plants in the State of Missouri that have implemented an ERDS interface, and for which any portion of the plant's 10-mile EPZ lies within the State of Missouri.

B. It is understood by the NRC and the State of Missouri that ERDS data will only be transmitted to the State of Missouri during emergencies classified at the Alert Level or above, during scheduled tests, or during exercises when available.

C. Nothing in this MOU is intended to restrict or expand the statutory authority of the NRC, the State of Missouri, or to affect or otherwise alter the terms of any agreement in effect under the authority of Section 274b of the Atomic Energy Act of 1954, as amended; nor is anything in this MOU intended to restrict or expand the authority of the State of Missouri on matters not within the scope of this MOU.

D. Nothing in this MOU confers upon the State of Missouri the authority to (1) Interpret or modify NRC regulations and NRC requirements imposed on the licensee; (2) take enforcement actions; (3) issue confirmatory letters; (4) amend, modify, or revoke a license issued by the NRC; or (5) direct or recommend nuclear power plant employees to take, or not take, any action. Authority for all such actions is reserved exclusively to the NRC.

E. This MOU does not confer any binding obligation or right of action on either party. This MOU does not obligate any funds and is subject to the availability of appropriated funds.

IV. NRC's General Responsibilities

Under this MOU, the NRC will maintain ERDS. ERDS is a system designed to receive, store, and retransmit data from in-plant data systems at nuclear power plants during

emergencies. The NRC will provide the State of Missouri, up to 10 digital certificates for use by State designated personnel in accessing ERDS data during emergencies at nuclear power plants which have implemented an ERDS interface, and for which any portion of the plant's 10-mile EPZ lies within the of State of Missouri. The NRC reserves the right to revoke digital certificates at any time.

V. State of Missouri's General Responsibilities

A. The State of Missouri, through its lead radiological agency, will, in cooperation with the NRC, establish a capability to receive ERDS data. To this end, the State of Missouri will provide the necessary computer hardware and commercially licensed software required for ERDS data transfer to users.

B. The State of Missouri will provide the NRC with an initial, and periodically updated, list of designated persons serving as holders of ERDS digital certificates.

C. The State of Missouri will use ERDS only to access data, at the Alert level or higher, from nuclear power plants for which all or a portion of the 10-mile EPZ falls within its State boundary.

D. For the purpose of minimizing the impact on plant operators, the State of Missouri will seek clarification of ERDS data through the NRC.

VI. Implementation

A. The State of Missouri and the NRC agree to work in concert to assure that the following communications and information exchange protocol regarding ERDS are followed:

a. The State of Missouri and the NRC agree in good faith to make available to each other information within the intent and scope of this MOU.

b. NRC and the State of Missouri agree to meet as necessary to exchange information on matters of common concern pertinent to this MOU. Unless otherwise agreed, such meetings will be held in the NRC Headquarters Operations Center. The affected utilities will be kept informed of pertinent information covered by this MOU.

c. To preclude the premature release of sensitive information, NRC will protect sensitive information to the extent permitted by the Freedom of Information Act, 5 U.S.C. 552, Title 10 of the Code of Federal Regulations, Part 2.790, and all other applicable authority. The State of Missouri will protect sensitive information to the extent permitted by Chapter 610, Missouri Revised Statutes, and all other applicable authority.

d. NRC will conduct periodic tests of licensee ERDS data links. A copy of the test schedule will be provided to the Missouri Department of Health and Senior Services, Section for Disease Control and Environmental Epidemiology by the NRC. The Missouri Department of Health and Senior Services, Section for Disease Control and Environmental Epidemiology, under the auspices of the State Emergency Management Agency, may test its ability to access ERDS data during these scheduled tests, or may schedule independent tests of the State link with the NRC.

e. NRC will provide access to ERDS for emergency exercises with reactor units capable of transmitting exercise data to ERDS. For exercises in which the NRC is not participating, the Missouri Department of Health and Senior Services, Section for Disease Control and Environmental Epidemiology, under the auspices of the State Emergency Management Agency, will coordinate with the NRC in advance to ensure ERDS availability. NRC reserves the right to preempt ERDS use for any exercise in progress in the event of an actual event at any licensed nuclear power plant.

VII. Contacts

A. The principal senior management contacts for this MOU will be Director, Division of Preparedness and Response, Office of Nuclear Security and Incident Response for the NRC, and the Director, State Emergency Management Agency for the State of Missouri. These individuals may designate appropriate staff representatives for the purpose of administering this MOU.

B. Identification of these contacts is not intended to restrict communication between NRC and Missouri Department of Health and Senior Services, Section for Disease Control and Environmental Epidemiology staff members on technical and other day-to-day activities.

VIII. Resolution of Disagreements

A. If disagreements arise about matters within the scope of this MOU, NRC and the State of Missouri will work together to resolve these differences.

B. Differences between the State of Missouri and NRC staff over issues arising out of this MOU will, if they cannot be resolved in accordance with Section VIII.A, will be resolved by the Director of the NRC Division of Preparedness and Response, Office of Nuclear Security and Incident Response.

C. Differences which cannot be resolved in accordance with Sections VIII.A and VIII.B will be reviewed and resolved by the NRC's Director, Office of Nuclear Security and Incident Response.

D. The NRC's General Counsel has the final authority to provide legal interpretation of the Commission's regulations.

IX. Effective Date

This MOU will take effect after it has been signed by both parties.

X. Duration

A formal review, not less than 1 year after the effective date, will be performed by the NRC to evaluate implementation of the MOU and resolve any problems identified. This MOU will be subject to periodic reviews and may be amended or modified upon written agreement by both parties, and may be terminated upon 30 days written notice by either party.

XI. Separability

If any provision(s) of this MOU, or the application of any provision(s) to any person or circumstances is held invalid, the remainder of this MOU and the application of such provisions to other persons or circumstances will not be affected.

For the U.S. Nuclear Regulatory Commission.

Dated: November 26, 2008.

Martin Virgilio for R. William Borchardt,
Executive Director for Operations, U.S. Nuclear Regulatory Commission.

For the State of Missouri.

Dated: July 10, 2008.

Ronald M. Reynolds,
Director, State Emergency Management Agency.

[FR Doc. E9–980 Filed 1–15–09; 8:45 am]

BILLING CODE 7590–01–P

NUCLEAR REGULATORY COMMISSION

[NRC–2009–0028; Docket No. 70–1257]

Notice of Opportunity To Request a Hearing for License Amendment Request From AREVA NP, Inc., Richland, WA and Order Imposing Procedures for Access to Sensitive Unclassified Non-Safeguards Information and Safeguards Information for Contention Preparation

AGENCY: Nuclear Regulatory Commission.

ACTION: Notice of license amendment and opportunity to request a hearing.

DATES: A request for a hearing must be filed by March 17, 2009.

FOR FURTHER INFORMATION CONTACT: Rafael L. Rodriguez, Project Manager, Fuel Manufacturing Branch, Division of Fuel Cycle Safety and Safeguards, Office of Nuclear Material Safety and Safeguards, U.S. Nuclear Regulatory Commission, Mail Stop EBB–2–C40M, Washington, DC 20555–0001, Telephone: (301) 492–3111; Fax number: (301) 492–3363; e-mail: *Rafael.Rodriguez@nrc.gov.*

SUPPLEMENTARY INFORMATION:

I. Introduction

The U.S. Nuclear Regulatory Commission (NRC) has received, by letter dated August 22, 2008, a license amendment application from AREVA, requesting an amendment to its Special Nuclear Materials License No. SNM–1227 to install and operate a new process at an existing building. License No. SNM–1227 authorizes the licensee to receive title to, own, acquire, deliver, possess, use, and transfer uranium enriched up to 5% wt. for the production of nuclear fuel assemblies for commercial light water reactors. Specifically, the amendment would allow AREVA to install and operate a process that would recover uranium from waste material that contains a relatively low percentage of uranium using supercritical carbon dioxide (CO_2) at the AREVA site located in Richland, Washington.

An administrative review, documented in a letter to AREVA dated September 16, 2008, found the application acceptable to begin a detailed technical review. If the NRC approves the amendment, the approval will be documented in an amendment to NRC License No. SNM–1227. However, before approving the proposed amendment, the NRC will need to make the findings required by the Atomic Energy Act of 1954, as amended (the Act), and NRC's regulations. These findings will be documented in a Safety Evaluation Report and an Environmental Assessment or Environmental Impact Statement.

II. Opportunity To Request a Hearing

The NRC hereby provides notice that this is a proceeding on an application for a license amendment regarding a proposed process to extract uranium using supercritical CO_2. Any person whose interest may be affected by this proceeding and who desires to participate as a party, must file a request for a hearing and a specification of the contentions which the person seeks to have litigated in the hearing, in accordance with the NRC E-Filing rule, 10 CFR 2.302. The E-Filing rule requires participants to submit and serve documents over the Internet or in some cases, to mail copies on electronic storage media. Participants may not submit paper copies of their filings unless they seek a waiver in accordance with the procedures described below.

To comply with the procedural requirements of E-Filing, at least ten (10) days prior to the filing deadline, the petitioner/requestor must contact the Office of the Secretary by e-mail at *HEARING.DOCKET@nrc.gov*, or by calling (301) 415–1677, to request (1) a digital ID certificate, which allows the participant (or its counsel or representative) to digitally sign documents and access the E-Submittal server for any proceeding in which it is participating; and/or (2) creation of an electronic docket for the proceeding (even in instances in which the petitioner/requestor (or its counsel or representative) already holds an NRC-issued digital ID certificate). Each petitioner/requestor will need to download the Workplace Forms Viewer™ to access the Electronic Information Exchange (EIE), a component of the E-Filing system. The Workplace Forms Viewer™ is free and is available at *http://www.nrc.gov/site-help/e-submittals/install-viewer.html.* Information about applying for a digital ID certificate is available on NRC's public Web site at *http://www.nrc.gov/site-help/e-submittals/apply-certificates.html.*

Once a petitioner/requestor has obtained a digital ID certificate, had a docket created, and downloaded the EIE viewer, it can then submit a request for hearing or petition for leave to intervene. Submissions should be in Portable Document Format (PDF) in accordance with NRC guidance available on the NRC public Web site at *http://www.nrc.gov/site-help/e-submittals.html.* A filing is considered complete at the time the filer submits its documents through EIE. To be timely, an electronic filing must be submitted to the EIE system no later than 11:59 p.m., Eastern Time on the due date. Upon receipt of a transmission, the E-Filing system time-stamps the document and sends the submitter an e-mail notice confirming receipt of the document. The EIE system also distributes an e-mail notice that provides access to the document to the NRC Office of the General Counsel and any others who have advised the Office of the Secretary that they wish to participate in the proceeding, so that the filer need not serve the documents on those participants separately. Therefore, applicants and other participants (or their counsel or representative) must apply for and receive a digital ID certificate before a hearing request/petition to intervene is filed so that they can obtain access to the document via the E-Filing system.

A person filing electronically may seek assistance through the ''Contact Us'' link located on the NRC Web site at *http://www.nrc.gov/site-help/e-submittals.html* or by calling the NRC technical help line, which is available between 8:30 a.m. and 4:15 p.m., Eastern Time, Monday through Friday. The help line number is (800) 397–4209 or locally, (301) 415–4737. Participants who believe that they have a good cause for not submitting documents electronically must file a motion, in accordance with 10 CFR 2.302(g), with their initial paper filing requesting authorization to continue to submit documents in paper format. Such filings must be submitted by: (1) First class mail addressed to the Office of the Secretary of the Commission, U.S. Nuclear Regulatory Commission, Washington, DC 20555–0001, Attention: Rulemaking and Adjudications Staff; or (2) courier, express mail, or expedited delivery service to the Office of the Secretary, Sixteenth Floor, One White Flint North, 11555 Rockville Pike, Rockville, Maryland 20852, Attention: Rulemaking and Adjudications Staff. Participants filing a document in this manner are responsible for serving the document on all other participants. Filing is considered complete by first-class mail as of the time of deposit in the mail, or by courier, express mail, or expedited delivery service upon depositing the document with the provider of the service.

Non-timely requests and/or petitions and contentions will not be entertained absent a determination by the Commission, the presiding officer, or the Atomic Safety and Licensing Board that the petition and/or request should be granted and/or the contentions should be admitted based on a balancing of the factors specified in 10 CFR 2.309(c)(1)(i)–(viii). To be timely, filings must be submitted no later than 11:59 p.m. Eastern Time on the due date.

Documents submitted in adjudicatory proceedings will appear in NRC's electronic hearing docket which is available to the public at *http://ehd.nrc.gov/EHD_Proceeding/home.asp*, unless excluded pursuant to an order of the Commission, an Atomic Safety and Licensing Board, or a Presiding Officer. Participants are requested not to include social security numbers in their filings. With respect to copyrighted works, except for limited excerpts that serve the purpose of the adjudicatory filings

and would constitute a Fair Use application, participants are requested not to include copyrighted materials in their submission.

The formal requirements for documents contained in 10 CFR 2.304(c)–(e) must be met. If the NRC grants an electronic document exemption in accordance with 10 CFR 2.302(g)(3), then the requirements for paper documents, set forth in 10 CFR 2.304(b) must be met.

In accordance with 10 CFR 2.309(b), a request for a hearing must be filed by March 17, 2009.

In addition to meeting other applicable requirements of 10 CFR 2.309, a request for a hearing must state:

1. The name, address, and telephone number of the requester;
2. The nature of the requester's right under the Act to be made a party to the proceeding;
3. The nature and extent of the requester's property, financial or other interest in the proceeding;
4. The possible effect of any decision or order that may be issued in the proceeding on the requester's interest; and
5. The circumstances establishing that the request for a hearing is timely in accordance with 10 CFR 2.309(b).

In accordance with 10 CFR 2.309(f)(1), a request for hearing or petitions for leave to intervene must set forth with particularity the contentions sought to be raised. For each contention, the request or petition must:

1. Provide a specific statement of the issue of law or fact to be raised or controverted;
2. Provide a brief explanation of the basis for the contention;
3. Demonstrate that the issue raised in the contention is within the scope of the proceeding;
4. Demonstrate that the issue raised in the contention is material to the findings that the NRC must make to support the action that is involved in the proceeding;
5. Provide a concise statement of the alleged facts or expert opinions which support the requester's/petitioner's position on the issue and on which the requester/petitioner intends to rely to support its position on the issue; and
6. Provide sufficient information to show that a genuine dispute exists with the applicant on a material issue of law or fact.

Requesters/petitioners should, when possible, consult with each other in preparing contentions and combine similar subject matter concerns into a joint contention, for which one of the co-sponsoring requesters/petitioners is designated the lead representative. Further, in accordance with 10 CFR 2.309(f)(3), any requester/petitioner that wishes to adopt a contention proposed by another requester/petitioner must do so, in accordance with the E-Filing rule, within ten days of the date the contention is filed, and designate a representative who shall have the authority to act for the requester/petitioner.

In accordance with 10 CFR 2.309(g), a request for hearing and/or petition for leave to intervene may also address the selection of the hearing procedures, taking into account the provisions of 10 CFR 2.310.

III. Further Information

Documents related to this action, including the application for amendment and supporting documentation, are available electronically at the NRC's Electronic Reading Room at *http://www.nrc.gov/reading-rm/adams.html.* From this site, you can access the NRC's Agency wide Document Access and Management System (ADAMS), which provides text and image files of NRC's public documents. The ADAMS accession numbers for the documents related to this notice are:

1. ML082420070: August 22, 2008, letter from R.E. Link Regarding Revised Application for Amendment to License No. SNM–11227; Installation of Supercritical CO_2 Uranium Recovery Process (Docket No. 70–1257).

2. ML082420071: Non-Proprietary Revised Application for Amendment to License No. SNM–11227; Installation of Supercritical CO_2 Uranium Recovery Process (Docket No. 70–1257).

If you do not have access to ADAMS or if there are problems in accessing the documents located in ADAMS, contact the NRC Public Document Room (PDR) Reference staff at 1–800–397–4209, 301–415–4737 or by e-mail to *PDR.RESOURCE@nrc.gov.*

These documents may also be viewed electronically on the public computers located at the NRC's Public Document Room (PDR), O 1 F21, One White Flint North, 11555 Rockville Pike, Rockville, MD 20852. The PDR reproduction contractor will copy documents for a fee.

Dated at Rockville, Maryland, this 7th day of January, 2009.

For the Nuclear Regulatory Commission.

Peter J. Habighorst,

Chief, Fuel Manufacturing Branch, Fuel Facility Licensing Directorate, Division of Fuel Cycle Safety and Safeguards, Office of Nuclear Materials Safety and Safeguards.

Order Imposing Procedures for Access to Sensitive Unclassified Non-Safeguards Information (SUNSI) and Safeguards Information (SGI) for Contention Preparation

1. This order contains instructions regarding how potential parties to this proceeding may request access to documents containing sensitive unclassified information (including SUNSI and SGI).

2. Within ten (10) days after publication of this notice of opportunity for hearing, any potential party as defined in 10 CFR 2.4 who believes access to SUNSI or SGI is necessary for a response to the notice may request access to SUNSI or SGI. A ''potential party'' is any person who intends or may intend to participate as a party by demonstrating standing and the filing of an admissible contention under 10 CFR 2.309. Requests submitted later than ten (10) days will not be considered absent a showing of good cause for the late filing, addressing why the request could not have been filed earlier.

3. The requester shall submit a letter requesting permission to access SUNSI and/or SGI to the Office of the Secretary, U.S. Nuclear Regulatory Commission, Washington, DC 20555–0001, Attention: Rulemakings and Adjudications Staff, and provide a copy to the Associate General Counsel for Hearings, Enforcement and Administration, Office of the General Counsel, Washington, DC 20555–0001. The expedited delivery or courier mail addresses for both offices is U.S. Nuclear Regulatory Commission, 11555 Rockville Pike, Rockville, MD 20852. The e-mail address for the Office of the Secretary and the Office of the General Counsel are *HEARING.DOCKET@NRC.GOV* and *OGCMAILCENTER.RESOURCE@NRC.GOV,* respectively. The request must include the following information:

a. A description of the licensing action with a citation to this **Federal Register** Notice of Opportunity for Hearing;

b. The name and address of the potential party and a description of the potential party's particularized interest that could be harmed by the action identified in (a);

c. If the request is for SUNSI, the identity of the individual requesting access to SUNSI and the requester's need for the information in order to meaningfully participate in this

adjudicatory proceeding, particularly why publicly available versions of the application would not be sufficient to provide the basis and specificity for a proffered contention;

d. If the request is for SGI, the identity of the individual requesting access to SGI and the identity of any expert, consultant or assistant who will aid the requester in evaluating the SGI, and information that shows:

(i) Why the information is indispensable to meaningful participation in this licensing proceeding; and

(ii) The technical competence (demonstrable knowledge, skill, experience, training or education) of the requester to understand and use (or evaluate) the requested information to provide the basis and specificity for a proffered contention. The technical competence of a potential party or its counsel may be shown by reliance on a qualified expert, consultant or assistant who demonstrates technical competence as well as trustworthiness and reliability, and who agrees to sign a non-disclosure affidavit and be bound by the terms of a protective order; and

e. If the request is for SGI, Form SF–85, ''Questionnaire for Non-Sensitive Positions,'' Form FD–248 (fingerprint card), and a credit check release form completed by the individual who seeks access to SGI and each individual who will aid the requester in evaluating the SGI. For security reasons, Form SF–85 can only be submitted electronically, through a restricted-access database. To obtain online access to the form, the requester should contact the NRC's Office of Administration at 301–415–0320. The other completed forms must be signed in original ink, accompanied by a check or money order payable in the amount of $191.00 to the U.S. Nuclear Regulatory Commission for each individual, and mailed to the: Office of Administration, Security Processing Unit, Mail Stop TWB–05 B32M, U.S. Nuclear Regulatory Commission, Washington, DC 20555–0012.

These forms will be used to initiate the background check, which includes fingerprinting as part of a criminal history records check. Note: Copies of these forms do not need to be included with the request letter to the Office of the Secretary, but the request letter should state that the forms and fees have been submitted as described above.

4. To avoid delays in processing requests for access to SGI, all forms should be reviewed for completeness and accuracy (including legibility) before submitting them to the NRC. Incomplete packages will be returned to the sender and will not be processed.

5. Based on an evaluation of the information submitted under items 2 and 3.a through 3.d above, the NRC staff will determine within ten days of receipt of the written access request whether (1) there is a reasonable basis to believe the petitioner is likely to establish standing to participate in this NRC proceeding, and (2) there is a legitimate need for access to SUNSI or need to know the SGI requested. For SGI, the need to know determination is made based on whether the information requested is necessary (i.e., indispensable) for the proposed recipient to proffer and litigate a specific contention in this NRC proceeding and whether the proposed recipient has the technical competence (demonstrable knowledge, skill, training, education, or experience) to evaluate and use the specific SGI requested in this proceeding.

6. If standing and need to know SGI are shown, the NRC staff will further determine, based upon completion of the background check, whether the proposed recipient is trustworthy and reliable. The NRC staff will conduct (as necessary) an inspection to confirm that the recipient's information protection systems are sufficient to protect SGI from inadvertent release or disclosure. Recipients may opt to view SGI at the NRC's facility rather than establish their own SGI protection program to meet SGI protection requirements.

7. A request for access to SUNSI or SGI will be granted if:

a. The request has demonstrated that there is a reasonable basis to believe that a potential party is likely to establish standing to intervene or to otherwise participate as a party in this proceeding;

b. The proposed recipient of the information has demonstrated a need for SUNSI or a need to know for SGI, and that the proposed recipient of SGI is trustworthy and reliable;

c. The proposed recipient of the information has executed a Non-Disclosure Agreement or Affidavit and agrees to be bound by the terms of a Protective Order setting forth terms and conditions to prevent the unauthorized or inadvertent disclosure of SUNSI and/or SGI; and

d. The presiding officer has issued a protective order concerning the information or documents requested. Any protective order issued shall provide that the petitioner must file SUNSI or SGI contentions 25 days after receipt of (or access to) that information. However, if more than 25 days remain between the petitioner's receipt of (or access to) the information and the deadline for filing all other contentions (as established in the notice of hearing or opportunity for hearing), the petitioner may file its SUNSI or SGI contentions by that later deadline.

8. If the request for access to SUNSI or SGI is granted, the terms and conditions for access to sensitive unclassified information will be set forth in a draft protective order and affidavit of non-disclosure appended to a joint motion by the NRC staff, any other affected parties to this proceeding, and the petitioner(s). If the diligent efforts by the relevant parties or petitioner(s) fail to result in an agreement on the terms and conditions for a draft protective order or non-disclosure affidavit, the relevant parties to the proceeding or the petitioner(s) should notify the presiding officer within five (5) days, describing the obstacles to the agreement.

9. If the request for access to SUNSI is denied by the NRC staff or a request for access to SGI is denied by NRC staff either after a determination on standing and need to know or, later, after a determination on trustworthiness and reliability, the NRC staff shall briefly state the reasons for the denial. Before the Office of Administration makes an adverse determination regarding access, the proposed recipient must be provided an opportunity to correct or explain information. The requester may challenge the NRC staff's adverse determination with respect to access to SUNSI or with respect to standing or need to know for SGI, by filing a challenge within five (5) days of receipt of that determination with (a) the presiding officer designated in this proceeding; (b) if no presiding officer has been appointed, the Chief Administrative Judge, or if he or she is unavailable, another administrative judge, or an administrative law judge with jurisdiction pursuant to § 2.318(a); or (c) if another officer has been designated to rule on information access issues, with that officer. In the same manner, an SGI requester may challenge an adverse determination on trustworthiness and reliability by filing a challenge within fifteen (15) days of receipt of that determination.

In the same manner, a party other than the requester may challenge an NRC staff determination granting access to SUNSI whose release would harm that party's interest independent of the proceeding. Such a challenge must be filed within five (5) days of the notification by the NRC staff of its grant of such a request.

If challenges to the NRC staff determinations are filed, these procedures give way to the normal

process for litigating disputes concerning access to information. The availability of interlocutory review by the Commission of orders ruling on such NRC staff determinations (whether granting or denying access) is governed by 10 CFR § 2.311.

10. The Commission expects that the NRC staff and presiding officers (and any other reviewing officers) will consider and resolve requests for access to SUNSI and/or SGI, and motions for protective orders, in a timely fashion in order to minimize any unnecessary delays in identifying those petitioners who have standing and who have propounded contentions meeting the specificity and basis requirements in 10 CFR Part 2.

Dated at Rockville, Maryland, this 13th day of January, 2009.

For the Nuclear Regulatory Commission.

Annette L. Vietti-Cook,

Secretary of the Commission.

Attachment 1—General Target Schedule for Processing and Resolving Requests for Access to Sensitive Unclassified Non-Safeguards Information (SUNSI) and Safeguards Information (SGI) in This Proceeding

Day	Event/activity
0	Publication of **Federal Register,** including order with instructions for access requests.
10	Deadline for submitting requests for access to SUNSI and/or SGI with information: Supporting the standing of a potential party identified by name and address; describing the need for the information in order for the potential party to participate meaningfully in an adjudicatory proceeding; demonstrating that access should be granted (e.g., showing technical competence for access to SGI); and, for SGI, including application fee for fingerprint/background check.
20	NRC staff informs the requester of the staff's determination whether the request for access provides a reasonable basis to believe standing can be established and shows (1) need for SUNSI or (2) need to know for SGI. (For SUNSI, NRC staff also informs any party to the proceeding whose interest independent of the proceeding would be harmed by the release of the information.) If NRC staff makes the finding of need for SUNSI and likelihood of standing, NRC staff begins document processing (preparation of redactions or review of redacted documents). If NRC staff makes the finding of need to know for SGI and likelihood of standing, NRC staff begins background check (including fingerprinting for a criminal history records check), information processing (preparation of redactions or review of redacted documents), and readiness inspections.
25	If NRC staff finds no ''need,'' ''need to know,'' or likelihood of standing, the deadline for petitioner/requester to file a motion seeking a ruling to reverse the NRC staff's denial of access; NRC staff files copy of access determination with the presiding officer (or Chief Administrative Judge or other designated officer, as appropriate). If NRC staff finds ''need'' for SUNSI, the deadline for any party to the proceeding whose interest independent of the proceeding would be harmed by the release of the information to file a motion seeking a ruling to reverse the NRC staff's grant of access.
30	Deadline for NRC staff reply to motions to reverse NRC staff determination(s).
40	(Receipt +30) If NRC staff finds standing and need for SUNSI, deadline for NRC staff to complete information processing and file motion for Protective Order and draft Non-Disclosure Affidavit. Deadline for applicant/licensee to file Non-Disclosure Agreement for SUNSI.
60	Deadline for submitting petition for intervention containing: (i) Demonstration of standing; (ii) all contentions whose formulation does not require access to SUNSI and/or SGI (+25 Answers to petition for intervention; +7 petitioner/requestor reply).
190	(Receipt +180) If NRC staff finds standing, need to know for SGI, and trustworthiness and reliability, deadline for NRC staff to file motion for Protective Order and draft Non-disclosure Affidavit (or to make a determination that the proposed recipient of SGI is not trustworthy or reliable). Note: Before the Office of Administration makes an adverse determination regarding access, the proposed recipient must be provided an opportunity to correct or explain information.
205	Deadline for petitioner to seek reversal of a final adverse NRC staff determination either before the presiding officer or another designated officer.
A	If access granted: Issuance of presiding officer or other designated officer decision on motion for protective order for access to sensitive information (including schedule for providing access and submission of contentions) or decision reversing a final adverse determination by the NRC staff.
A + 3	Deadline for filing executed Non-Disclosure Affidavits. Access provided to SUNSI and/or SGI consistent with decision issuing the protective order.
A + 28	Deadline for submission of contentions whose development depends upon access to SUNSI and/or SGI. However, if more than 25 days remain between the petitioner's receipt of (or access to) the information and the deadline for filing all other contentions (as established in the notice of hearing or opportunity for hearing), the petitioner may file its SUNSI or SGI contentions by that later deadline.
A + 53	(Contention receipt +25) Answers to contentions whose development depends upon access to SUNSI and/or SGI.
A + 60	(Answer receipt +7) Petitioner/Intervener reply to answers.
B	Decision on contention admission.

[FR Doc. E9–960 Filed 1–15–09; 8:45 am]

BILLING CODE 7590–01–P

OFFICE OF PERSONNEL MANAGEMENT

Federal Prevailing Rate Advisory Committee; Open Committee Meetings

According to the provisions of section 10 of the Federal Advisory Committee Act (Pub. L. 92–463), notice is hereby given that meetings of the Federal Prevailing Rate Advisory Committee will be held on—

Thursday, February 12, 2009.

Thursday, March 19, 2009.

The meetings will start at 10 a.m. and will be held in Room 5A06A, U.S. Office of Personnel Management Building, 1900 E Street, NW., Washington, DC.

The Federal Prevailing Rate Advisory Committee is composed of a Chair, five representatives from labor unions holding exclusive bargaining rights for Federal blue-collar employees, and five representatives from Federal agencies. Entitlement to membership on the Committee is provided for in 5 U.S.C. 5347.

The Committee's primary responsibility is to review the Prevailing Rate System and other matters pertinent to establishing prevailing rates under subchapter IV, chapter 53, 5 U.S.C., as amended, and from time to time advise the U.S. Office of Personnel Management.

These scheduled meetings will start in open session with both labor and management representatives attending. During the meetings either the labor members or the management members

may caucus separately with the Chair to devise strategy and formulate positions. Premature disclosure of the matters discussed in these caucuses would unacceptably impair the ability of the Committee to reach a consensus on the matters being considered and would disrupt substantially the disposition of its business. Therefore, these caucuses will be closed to the public because of a determination made by the Director of the U.S. Office of Personnel Management under the provisions of section 10(d) of the Federal Advisory Committee Act (Pub. L. 92–463) and 5 U.S.C. 552b(c)(9)(B). These caucuses may, depending on the issues involved, constitute a substantial portion of a meeting.

Annually, the Chair compiles a report of pay issues discussed and concluded recommendations. These reports are available to the public, upon written request to the Committee.

The public is invited to submit material in writing to the Chair on Federal Wage System pay matters felt to be deserving of the Committee's attention. Additional information on these meetings may be obtained by contacting the Committee at U.S. Office of Personnel Management, Federal Prevailing Rate Advisory Committee, Room 5526, 1900 E Street, NW., Washington, DC 20415, (202) 606–2838.

Dated: January 12, 2009.

Charles E. Brooks,

Chairman, Federal Prevailing Rate Advisory Committee.

[FR Doc. E9–901 Filed 1–15–09; 8:45 am]

BILLING CODE 6325–49–P

RAILROAD RETIREMENT BOARD

Proposed Data Collection Available for Public Comment and Recommendations

SUMMARY: In accordance with the requirement of Section 3506 (c)(2)(A) of the Paperwork Reduction Act of 1995 which provides opportunity for public comment on new or revised data collections, the Railroad Retirement Board (RRB) will publish periodic summaries of proposed data collections.

Comments are invited on: (a) Whether the proposed information collections are necessary for the proper performance of the functions of the agency, including whether the information has practical utility; (b) the accuracy of the RRB's estimate of the burden of the collection of the information; (c) ways to enhance the quality, utility, and clarity of the information to be collected; and (d) ways to minimize the burden related to the collection of information on respondents, including the use of automated collection techniques or other forms of information technology.

1. *Title and Purpose of Information Collection:* Employer's Quarterly Report of Contributions Under the Railroad Unemployment Insurance Act; RRB Form DC–1; OMB 3220–0012

Under section 8 of the Railroad Unemployment Insurance Act (RUIA), as amended by the Railroad Unemployment Improvement Act of 1988 (Pub. L. 100–647), the amount of each employer's contribution is determined by the RRB, primarily on the basis of RUIA benefit payments made to the employees of that employer. These experienced based contributions, take into account the frequency, volume and duration of RUIA benefits, both unemployment and sickness, attributable to a railroad's employees. Each employer's contribution rate includes a component for administrative expenses and a component to cover costs shared by all employers. The regulations prescribing the manner and conditions for remitting the contributions and for adjusting overpayments or underpayments of contributions are contained in 20 CFR 345.

RRB Form DC–1, Employer's Quarterly Report of Contributions Under the Railroad Unemployment Insurance Act, is currently utilized by the RRB for the reporting and remitting of quarterly contributions by railroad employers. The RRB utilizes a manual version of Form DC–1 and also provides railroad employers with the option of reporting the required information and remitting their quarterly contributions via an Internet equivalent version Form DC–1.

One response is requested quarterly of each respondent and completion is mandatory. The RRB estimates that 2,160 responses are received annually. The estimated completion for the manual and Internet version of Form DC–1 is estimated at 25 minutes. The total burden for the collection is estimated at 900 hours. The RRB proposes no changes to Form DC–1.

2. *Title and Purpose of Information Collection:* Applicant Background Survey: RRB Form EEO–44, OMB 3220–0201

This information collection is needed to comply with Federal laws and regulations. 5 U.S.C. Chapter 72 § 7201 establishes an anti-discrimination policy. Title VII of the Civil Rights Act of 1964, § 2000e–8 [§ 709], requires agencies to make and keep relevant records to identify unlawful employment practices. 29 CFR 1602 allows agencies to collect data to determine if there is any adverse impact on employment practices such as recruitment or selection.

The RRB's Equal Employment Office collects data to assess the impact of the agency's recruitment processes on the hiring of minorities, women and people with disabilities. To obtain the information necessary to conduct a proper assessment, the RRB utilizes Form EEO–44, Applicant Background Survey, which collects information about the racial or ethnic identity, gender and disability of applicants for RRB jobs from outside of the Federal government.

Form EEO–44 is only viewed by RRB Human Resources personnel and Equal Employment Opportunity officials. Summarized data from all external applicants for a position is used to identify hiring barriers which limit or tends to limit employment opportunities for members of a particular sex, race, or ethnic background, or based on an individual's disability status.

The EEO–44 contains a ''Plain English'' assurance that the information will be kept highly confidential and only shared with authorized RRB officials. This assurance specifically states that the information obtained is kept as a running tally which cannot be disaggregated into individual names, that information from the form is *not* entered into the RRB's personnel database, that the information is not provided to selecting officials or any others who can affect the selection, or to the public, and that the forms is destroyed after the position is filled. The information maintained does not include the applicant's name or other identifier.

Completion of one form is requested of each respondent and is voluntary. The RRB estimates that 800 EEO–44's are completed annually at an estimated completion time of 5 minutes. The total burden for the collection is estimated at 67 hours. The RRB proposes no changes to Form EEO–44.

Additional Information or Comments: To request more information or to obtain a copy of the information collection justification, forms, and/or supporting material, please call the RRB Clearance Officer at (312) 751–3363 or send an e-mail request to *Charles.Mierzwa@RRB.GOV.* Comments regarding the information collection should be addressed to Ronald J. Hodapp, Railroad Retirement Board, 844 North Rush Street, Chicago, Illinois 60611–2092 or send an e-mail to *Ronald.Hodapp@RRB.GOV.* Written

comments should be received within 60 days of this notice.

Charles Mierzwa,

Clearance Officer.

[FR Doc. E9–970 Filed 1–15–09; 8:45 am]

BILLING CODE 7905–01–P

SECURITIES AND EXCHANGE COMMISSION

Proposed Collection; Comment Request

Upon Written Request, Copies Available From: Securities and Exchange Commission, Office of Investor Education and Advocacy, Washington, DC 20549–0213.

Extension: Rules 17Ad–6 and 17Ad–7; OMB Control No. 3235–0291; SEC File No. 270–151.

Notice is hereby given that, pursuant to the Paperwork Reduction Act of 1995 (44 U.S.C. 3501 *et seq.*), the Securities and Exchange Commission (''Commission'') is soliciting comments on the existing collection of information provided for in Rules 17Ad–6 and 17Ad–7 (17 CFR 240.17Ad–6 and –7) under the Securities Exchange Act of 1934 (15 U.S.C. 78a *et seq.*) (''Exchange Act''). The Commission plans to submit this existing collection of information to the Office of Management and Budget for extension and approval.

Rule 17Ad–6 under the Exchange Act requires every registered transfer agent to make and keep current records about a variety of information, such as: (1) Specific operational data regarding the time taken to perform transfer agent activities (to ensure compliance with the minimum performance standards in Rule 17Ad–2 (17 CFR 240.17Ad–2); (2) written inquiries and requests by shareholders and broker-dealers and response time thereto; (3) resolutions, contracts or other supporting documents concerning the appointment or termination of the transfer agent; (4) stop orders or notices of adverse claims to the securities; and (5) all canceled registered securities certificates.

Rule 17Ad–7 under the Securities Exchange Act of 1934 (15 U.S.C. 78b *et seq.*) requires each registered transfer agent to retain the records specified in Rule 17Ad–6 in an easily accessible place for a period of six months to six years, depending on the type of record or document. Rule 17Ad–7 also specifies the manner in which records may be maintained using electronic, microfilm, and microfiche storage methods.

These recordkeeping requirements are designed to ensure that all registered transfer agents are maintaining the records necessary for them to monitor and keep control over their own performance and for the Commission to adequately examine registered transfer agents on an historical basis for compliance with applicable rules.

The Commission estimates that approximately 600 registered transfer agents will spend a total of 300,000 hours per year complying with Rules 17Ad–6 and 17Ad–7 (500 hours per year per transfer agent).

Written comments are invited on: (a) Whether the proposed collection of information is necessary for the proper performance of the functions of the Commission, including whether the information shall have practical utility; (b) the accuracy of the Commission's estimates of the burden of the proposed collection of information; (c) ways to enhance the quality, utility, and clarity of the information to be collected; and (d) ways to minimize the burden of the collection of information on respondents, including through the use of automated collection techniques or other forms of information technology. Consideration will be given to comments and suggestions submitted in writing within 60 days of this publication.

Comments should be directed to Charles Boucher, Director/Chief Information Officer, Securities and Exchange Commission, c/o Shirley Martinson, 6432 General Green Way, Alexandria, VA 22312 or send an e-mail to: *PRA_Mailbox@sec.gov*.

Dated: January 12, 2009.

Florence E. Harmon,

Deputy Secretary.

[FR Doc. E9–880 Filed 1–15–09; 8:45 am]

BILLING CODE 8011–01–P

SECURITIES AND EXCHANGE COMMISSION

Proposed Collection; Comment Request

Upon Written Request, Copies Available From: Securities and Exchange Commission, Office of Investor Education and Advocacy, Washington, DC 20549–0213.

Extension:
Form 12b–25, OMB Control No. 3235–0058, SEC File No. 270–71.

Notice is hereby given that pursuant to the Paperwork Reduction Act of 1995 (44 U.S.C. 3501 *et seq.*) the Securities and Exchange Commission (''Commission'') is soliciting comments on the collection of information summarized below. The Commission plans to submit this existing collection of information to the Office of Management and Budget for extension and approval.

The purpose of Form 12b–25 (17 CFR 240.12b–25) is to provide notice to the Commission and the marketplace that a public company will be unable to timely file a required periodic report or transition report pursuant to the Securities Exchange Act of 1934 (15 U.S.C 78a *et seq.*). If all the filing conditions of the form are met, the company is granted an automatic filing extension. Form 12b–25 is filed by publicly held companies. Approximately 7,799 registrants file Form 12b–25 and it takes approximately 2.5 hours per response for a total of 19,498 burden hours.

Written comments are invited on: (a) Whether this proposed collection of information is necessary for the proper performance of the functions of the agency, including whether the information will have practical utility; (b) the accuracy of the agency's estimate of the burden imposed by the collection of information; (c) ways to enhance the quality, utility, and clarity of the information collected; and (d) ways to minimize the burden of the collection of information on respondents, including through the use of automated collection techniques or other forms of information technology. Consideration will be given to comments and suggestions submitted in writing within 60 days of this publication.

Please direct your written comments to Charles Boucher, Director/Chief Information Officer, Securities and Exchange Commission, C/O Shirley Martinson, 6432 General Green Way, Alexandria, Virginia 22312; or send an e-mail to: *PRA_Mailbox@sec.gov*.

Dated: January 12, 2009.

Florence E. Harmon,

Deputy Secretary.

[FR Doc. E9–929 Filed 1–15–09; 8:45 am]

BILLING CODE 8011–01–P

SECURITIES AND EXCHANGE COMMISSION

[Release No. 34–59225; File No. 4–533]

Joint Industry Plan; Notice of Filing and Immediate Effectiveness of Amendment No. 1 to the National Market System Plan for the Selection and Reservation of Securities Symbols To Modify Certain Effective Dates in Plan, Submitted by NASDAQ OMX BX, Inc., the Chicago Stock Exchange, Inc., the Chicago Board Options Exchange, Incorporated, the International Securities Exchange, LLC, the Financial Industry Regulatory Authority, Inc., the National Stock Exchange, Inc., The NASDAQ Stock Market LLC, the New York Stock Exchange LLC, NYSE Alternext Exchange US LLC, NYSE Arca, Inc., and the NASDAQ OMX PHLX, Inc.

January 9, 2009.

I. Introduction

Pursuant to Section 11A(a)(3) of the Securities Exchange Act of 1934 (''Act'')[1] and Rule 608 thereunder,[2] notice is hereby given that on January 5, 2009, NASDAQ OMX BX, Inc., the Chicago Stock Exchange, Inc. (''CHX''), the Chicago Board Options Exchange, Incorporated, the International Securities Exchange, LLC, the Financial Industry Regulatory Authority, Inc. (''FINRA''), the National Stock Exchange, Inc. (''NSX''), The NASDAQ Stock Market LLC (''Nasdaq''), the New York Stock Exchange LLC, NYSE Alternext Exchange US LLC, NYSE Arca, Inc., and the NASDAQ OMX PHLX, Inc. (''Phlx'') (together, the ''Parties'') filed with the Securities and Exchange Commission (''Commission'') Amendment No. 1 to the National Market System Plan for the Selection and Reservation of Securities Symbols (''Symbology Plan'' or ''Plan'').[3] The amendment modifies certain effective dates in the Symbology Plan. The Commission is publishing this notice of filing and immediate effectiveness to solicit comments on the amendment from interested persons.

II. Description and Purpose of the Amendment

The purpose of Amendment No. 1 is to: (i) Delay the start of the 30-day initial symbol reservation period until 120 days after the Commission's approval of the Plan; and (ii) delay the establishment of the Plan as the exclusive method of allocating symbols of one-, two-, three-, four-, and five-characters in length until 150 days after the Commission approval of the Plan. Through the amendment, the initial symbol reservation period would now commence on March 6, 2009 and the Plan would become the exclusive method of allocating symbols of one-, two-, three-, four-, and five-characters in length on April 5, 2009. The purpose of the amendment is to give the parties adequate time to properly evaluate and select the Plan processor and to implement the Plan in an organized fashion.

III. Effectiveness of the Proposed Symbology Plan Amendment

Pursuant to paragraph to (b)(3)(ii) of Rule 608 under the Act,[4] the Parties have designated this amendment as one concerned solely with the administration of the Plan, thereby qualifying the amendment to be put into effect upon filing with the Commission.

The Commission may summarily abrogate the amendment within sixty days of its filing and require refiling and approval of the amendment by Commission order pursuant to Rule 608(b)(2) under the Act[5] if it appears to the Commission that such action is necessary or appropriate in the public interest, for the protection of investors, or the maintenance of fair and orderly markets, to remove impediments to, and perfect the mechanisms of, a national market system, or otherwise in furtherance of the purposes of the Act.

IV. Solicitation of Comments

Interested persons are invited to submit written data, views and arguments concerning the foregoing, including whether Amendment No. 1 is consistent with the Act. Comments may be submitted by any of the following methods:

Electronic Comments

- Use the Commission's Internet comment form (*http://www.sec.gov/rules/sro.shtml*); or
- Send an e-mail to *rule-comments@sec.gov.* Please include File Number 4–533 on the subject line.

Paper Comments

- Send paper comments in triplicate to Elizabeth M. Murphy, Secretary, Securities and Exchange Commission, 100 F Street, NE., Washington, DC 20549–1090.

All submissions should refer to File Number 4–533. This file number should be included on the subject line if e-mail is used. To help the Commission process and review your comments more efficiently, please use only one method. The Commission will post all comments on the Commission's Internet Web site (*http://www.sec.gov/rules/sro.shtml*). Copies of the submission, all subsequent amendments, all written statements with respect to the proposed rule change that are filed with the Commission, and all written communications relating to the proposed rule change between the Commission and any person, other than those that may be withheld from the public in accordance with the provisions of 5 U.S.C. 552, will be available for inspection and copying in the Commission's Public Reference Room, on official business days between the hours of 10 a.m. and 3 p.m. All comments received will be posted without change; the Commission does not edit personal identifying information from submissions. You should submit only information that you wish to make available publicly. All submissions should refer to File Number 4–533 and should be submitted on or before February 6, 2009.

For the Commission, by the Division of Trading and Markets, pursuant to delegated authority.[6]

Florence E. Harmon,

Deputy Secretary.

[FR Doc. E9–882 Filed 1–15–09; 8:45 am]

BILLING CODE 8011–01–P

[1] 15 U.S.C. 78k–1(a)(3).

[2] 17 CFR 242.608.

[3] On November 6, 2008, the Commission approved the Symbology Plan that was originally proposed by the CHX, Nasdaq, FINRA, NSX, and Phlx, subject to certain changes. *See* Securities Exchange Act Release No. 58904, 73 FR 67218 (November 13, 2008) (File No. 4–533).

[4] 17 CFR 242.608(b)(3)(ii).

[5] 17 CFR 242.608(b)(2).

[6] 17 CFR 200.30–3(a)(29).

SECURITIES AND EXCHANGE COMMISSION

[Release No. 34–59217; File No. SR–NYSE–2008–138]

Self-Regulatory Organizations; Notice of Filing of Proposed Rule Change by New York Stock Exchange LLC To Memorialize an Interpretation of the Listed Company Manual Concerning Shareholder Approval Requirements and To Describe a Certain Application of its Audit Committee Rule

January 8, 2009.

Pursuant to Section 19(b)(1)[1] of the Securities Exchange Act of 1934 (the ''Exchange Act''),[2] and Rule 19b–4 thereunder,[3] notice is hereby given that,

[1] 15 U.S.C. 78s(b)(1).

[2] 15 U.S.C. 78a.

[3] 17 CFR 240.19b–4.

on December 22, 2008, New York Stock Exchange LLC (the ''NYSE'' or the ''Exchange'') filed with the Securities and Exchange Commission the proposed rule change as described in Items I, II and III below, which items have been prepared by the Exchange. The Commission is publishing this notice to solicit comments on the proposed rule changes from interested persons.

I. Self-Regulatory Organization's Statement of the Terms of Substance of the Proposed Rule Change

The Exchange proposes to memorialize an interpretation of the Listed Company Manual. The text of the proposed rule change is available on the Exchange's Web site (http://www.nyse.com), at the Exchange's Office of the Secretary and at the Commission's Public Reference Room.

II. Self-Regulatory Organization's Statement of the Purpose of, and Statutory Basis for, the Proposed Rule Change

In its filing with the Commission, the self-regulatory organization included statements concerning the purpose of and basis for the proposed rule change and discussed any comments it received on the proposed rule change. The text of these statements may be examined at the places specified in Item IV below. The NYSE has prepared summaries, set forth in Sections A, B and C below, of the most significant aspects of such statements.

A. Self-Regulatory Organization's Statement of the Purpose of, and Statutory Basis for the Proposed Rule Change

1. Purpose

On September 7, 2008 the Secretary of the Treasury of the United States and the Director of the FHFA jointly announced that on September 6, 2008, pursuant to authority previously granted by Congress, FNM and FRE were placed into conservatorship with the FHFA, and Treasury entered into a Senior Preferred Stock Purchase Agreement with each company providing for, among other things, the issuance by each company to Treasury of senior preferred stock, and common stock warrants representing an ownership stake of 79.9% in each company.[4]

The issuance of a security convertible into common stock equal to or in excess of 20% of the then outstanding common stock of a listed company generally requires shareholder approval under Section 312.03 of the NYSE Listed Company Manual. The NYSE has for many years taken the position that a listed company which is a debtor-in-possession under the U.S. bankruptcy laws satisfies the stockholder approval that might otherwise be required in connection with an issuance of common stock or a security convertible into common stock by obtaining bankruptcy court approval of the issuance of such stock. Such an interpretation is the only practical approach given that in such a circumstance the court, not the stockholders, has the authority to authorize or refuse to authorize the issuance of the security. Consequently, this rule filing codifies the Exchange's longstanding position that a listed company which is a debtor-in-possession satisfies any applicable stockholder approval requirement under Section 312.03 by obtaining bankruptcy court approval of the proposed issuance.

The FHFA has specified that ''the powers of the stockholders [of FNM and FRE] are suspended until the conservatorship is terminated.''[5] Based on this, the NYSE has concluded that for purposes of its rules requiring stockholder approval of the issuance of securities, i.e., Sections 312.03 and 303A.08 of the Listed Company Manual, it is appropriate to treat FNM and FRE while they are in conservatorship in the same manner as if they were each a debtor-in-possession under the bankruptcy law. Accordingly, the NYSE takes the position that the requirement of Section 312.03 has been satisfied in connection with the issuance to the Department of the Treasury (the ''Treasury'') by each of FNM and FRE of the warrants exercisable for common stock.

Following the establishment of the conservatorship, the independent directors serving on the audit committees of the boards of directors of each of the companies left the board. Each of FNM and FRE are currently engaged in obtaining replacement directors and arranging the appropriate delegation from FHFA to the boards and the audit committees to allow the audit committees to function. In keeping with its normal procedures under the provisions of Listed Company Manual Section 303A.06, NYSE is allowing the companies an appropriate period of time in which to fill the vacancies on the audit committee. The NYSE was informed that in connection with the quarterly financial reports on Form 10–Q which were filed in November for the companies' third quarter, each company arranged for its staff and independent auditor to make a presentation regarding the quarterly report to appropriate departments of the FHFA that was intended to replicate the kind of review that an audit committee would normally conduct with respect to a company's quarterly financials. The NYSE believes that this action is appropriate in light of the fact that neither company had an audit committee that was able to conduct that review. The Exchange notes that this filing does not seek to interpret Rule 10A–3 under the Sarbanes-Oxley Act. Rather, the Exchange is simply describing its application of the requirements of Section 303A.06 of the Manual to FNM and FRE during the period that they do not have independent audit committees.

2. Statutory Basis

The Exchange believes that the proposed rule change is consistent with Section 6(b)[6] of the Exchange Act in general and furthers the objectives of Section 6(b)(5) of the Exchange Act[7] in particular in that it is designed to promote just and equitable principles of trade, to foster cooperation and coordination with persons engaged in regulating, clearing, settling, processing information with respect to, and facilitating transactions in securities, to remove impediments to and perfect the mechanism of a free and open market and a national market system, and, in general, to protect investors and the public interest. The Exchange believes its proposed interpretations of Sections 312.03 and 303A.06 are reasonable in light of the policies underlying those rules and constitute a suitable application of its rules to this unique and unprecedented situation. In particular, the Exchange notes that (i) it is in the public interest that the issuance of securities to the Treasury should not be subject to shareholder approval in light of the scale of Treasury's provision of capital to the two companies and (ii) the oversight of the companies' financial reporting by FHFA provides a reasonable level of protection to investors while the companies are repopulating their independent audit committees required by Section 303A.06.

[4] The Commission notes that the terms ''FHFA,'' ''FNM,'' and ''FRE'' refer to the Federal Housing Finance Agency, Fannie Mae, and Freddie Mac, respectively.

[5] *See* Questions and Answers of Conservatorship, available on the Web site of the FHFA. (*http://www.ofheo.gov/media/pdf/FHFACONSERVQA.pdf*) Note that FHFA in the same paragraph stated that ''Stockholders will continue to retain all rights in the stock's financial worth; as such worth is determined by the market.''

[6] 15 U.S.C. 78f(b).

[7] 15 U.S.C. 78f(b)(5).

B. Self-Regulatory Organization's Statement on Burden on Competition

The Exchange does not believe that the proposed rule change will impose any burden on competition that is not necessary or appropriate in furtherance of the purposes of the Exchange Act.

C. Self-Regulatory Organization's Statement on Comments on the Proposed Rule Change Received From Members, Participants or Others

Written comments were neither solicited nor received.

III. Date of Effectiveness of the Proposed Rule Change and Timing for Commission Action

The proposed rule change is effective upon filing pursuant to Section 19(b)(3)(A) of the Exchange Act [8] and paragraph (f)(1) of Rule 19b–4 thereunder [9] as constituting a stated policy, practice, or interpretation with respect to the meaning, administration, or enforcement of an existing Exchange rule. At any time within 60 days of the filing of the proposed rule change, the Commission may summarily abrogate such rule change if it appears to the Commission that such action is necessary or appropriate in the public interest, for the protection of investors, or otherwise in furtherance of the purposes of the Exchange Act.

IV. Solicitation of Comments

Interested persons are invited to submit written data, views and arguments concerning the foregoing, including whether the proposed rule change is consistent with the Exchange Act. Comments may be submitted by any of the following methods:

Electronic Comments

- Use the Commission's Internet comment form (*http://www.sec.gov/rules/sro.shtml*); or
- Send an e-mail to *rule-comments@sec.gov*. Please include File Number SR–NYSE–2008–138 on the subject line.

Paper Comments

- Send paper comments in triplicate to Elizabeth M. Murphy, Secretary, Securities and Exchange Commission, 100 F Street, NE., Washington, DC 20549–1090.

All submissions should refer to File Number SR–NYSE–2008–138. This file number should be included on the subject line if e-mail is used. To help the Commission process and review your comments more efficiently, please use only one method. The Commission will post all comments on the Commission's Internet Web site (*http://www.sec.gov/rules/sro.shtml*). Copies of the submission, all subsequent amendments, all written statements with respect to the proposed rule change that are filed with the Commission, and all written communications relating to the proposed rule change between the Commission and any person, other than those that may be withheld from the public in accordance with the provisions of 5 U.S.C. 552, will be available for inspection and copying in the Commission's Public Reference Room, on official business days between the hours of 10 a.m. and 3 p.m. Copies of the filing also will be available for inspection and copying at the principal office of the Exchange. All comments received will be posted without change; the Commission does not edit personal identifying information from submissions. You should submit only information that you wish to make available publicly. All submissions should refer to File Number SR–NYSE–2008–138 and should be submitted on or before February 6, 2009.

For the Commission, by the Division of Trading and Markets, pursuant to delegated authority.[10]

Florence E. Harmon,

Deputy Secretary.

[FR Doc. E9–881 Filed 1–15–09; 8:45 am]

BILLING CODE 8011–01–P

[8] 17 CFR 240.19b–4(f)(1).

[9] 17 CFR 240.19b–4(f)(1).

[10] 17 CFR 200.30–3(a)(12).

SECURITIES AND EXCHANGE COMMISSION

[Release No. 34–59229; File No. SR–NYSE–2009–01]

Self-Regulatory Organizations; Notice of Filing and Immediate Effectiveness of Proposed Rule Change by New York Stock Exchange LLC Adopting a Temporary Equity Transaction Fee for Shares Executed on the NYSE MatchPoint℠ System, Effective Upon Filing With the Securities and Exchange Commission Until February 28, 2009

January 12, 2009.

Pursuant to Section 19(b)(1) [1] of the Securities Exchange Act of 1934 (the ''Act'') [2] and Rule 19b–4 thereunder,[3] notice is hereby given that, on January 7, 2009, New York Stock Exchange LLC (''NYSE'' or the ''Exchange'') filed with the Securities and Exchange Commission (the ''Commission'') the proposed rule change as described in Items I, II, and III below, which Items have been prepared by the self-regulatory organization. The Commission is publishing this notice to solicit comments on the proposed rule change from interested persons.

I. Self-Regulatory Organization's Statement of the Terms of Substance of the Proposed Rule Change

The Exchange proposes to adopt a temporary equity transaction fee for shares executed on the NYSE MatchPoint℠ (''NYSE MatchPoint'' or ''MatchPoint'') system, effective upon filing with the Securities Exchange Commission [sic] (''SEC'') until February 28, 2009. The Exchange will charge each member organization using the MatchPoint system a per share fee scaled to the average daily volume of shares it executes on the MatchPoint system.

II. Self-Regulatory Organization's Statement of the Purpose of, and Statutory Basis for, the Proposed Rule Change

In its filing with the Commission, the self-regulatory organization included statements concerning the purpose of, and basis for, the proposed rule change and discussed any comments it received on the proposed rule change. The text of those statements may be examined at the places specified in Item IV below. The Exchange has prepared summaries, set forth in sections A, B, and C below, of the most significant parts of such statements.

A. Self-Regulatory Organization's Statement of the Purpose of, and Statutory Basis for, the Proposed Rule Change

1. Purpose

Through this filing, the Exchange proposes to amend its equity transaction fee schedule on the NYSE MatchPoint system effective upon filing with the SEC until February 28, 2009. The current equity transaction fee is $.0015 per share executed on the MatchPoint system. The Exchange proposes to adopt a scaled fee for MatchPoint users based on the average daily volume of shares executed during a calendar month through the MatchPoint system as follows:

Average daily volume of shares executed	Rate (per share)
50,000 shares or less	$.0015
Over 50,000 to 499,999	.0010
500,000 and greater	.0005

[1] 15 U.S.C. 78s(b)(1).

[2] 15 U.S.C. 78a.

[3] 17 CFR 240.19b–4.

The MatchPoint fee will again revert to the current equity transaction fee of $.0015 per share beginning March 1, 2009. The temporary fee is designed to attract more users to the MatchPoint system.

2. Statutory Basis

The basis under the Securities Exchange Act of 1934 (the ''Act'') [4] for the proposed rule change is the requirement under Section 6(b)(4) that an exchange have rules that provide for the equitable allocation of reasonable dues, fees and other charges among its members and other persons using its facilities. The Exchange believes the new fees are reasonable in that they represent a reduction in fees, and are equitable in that they are available to all members who access the MatchPoint system.

B. Self-Regulatory Organization's Statement on Burden on Competition

The Exchange does not believe that the proposed rule change will impose any burden on competition that is not necessary or appropriate in furtherance of the purposes of the Act.

C. Self-Regulatory Organization's Statement on Comments on the Proposed Rule Change Received From Members, Participants, or Others

No written comments were solicited or received with respect to the proposed rule change.

III. Date of Effectiveness of the Proposed Rule Change and Timing for Commission Action

The foregoing rule change is effective upon filing pursuant to Section 19(b)(3)(A) [5] of the Act and subparagraph (f)(2) of Rule 19b–4 [6] thereunder.

At any time within 60 days of the filing of the proposed rule change, the Commission may summarily abrogate such rule change if it appears to the Commission that such action is necessary or appropriate in the public interest, for the protection of investors, or otherwise in furtherance of the purposes of the Act.

IV. Solicitation of Comments

Interested persons are invited to submit written data, views, and arguments concerning the foregoing, including whether the proposed rule change is consistent with the Act. Comments may be submitted by any of the following methods:

Electronic Comments

- Use the Commission's Internet comment form (*http://www.sec.gov/rules/sro.shtml*); or
- Send an e-mail to *rule-comments@sec.gov.* Please include File Number SR–NYSE–2009–01 on the subject line.

Paper Comments

- Send paper comments in triplicate to Elizabeth M. Murphy, Secretary, Securities and Exchange Commission, 100 F Street, NE., Washington, DC 20549–1090.

All submissions should refer to File Number SR–NYSE–2009–01. This file number should be included on the subject line if e-mail is used. To help the Commission process and review your comments more efficiently, please use only one method. The Commission will post all comments on the Commission's Internet Web site (*http://www.sec.gov/rules/sro.shtml*). Copies of the submission, all subsequent amendments, all written statements with respect to the proposed rule change that are filed with the Commission, and all written communications relating to the proposed rule change between the Commission and any person, other than those that may be withheld from the public in accordance with the provisions of 5 U.S.C. 552, will be available for inspection and copying in the Commission's Public Reference Room, 100 F Street, NE., Washington, DC 20549, on official business days between the hours of 10 a.m. and 3 p.m. Copies of the filing also will be available for inspection and copying at the principal office of the Exchange. All comments received will be posted without change; the Commission does not edit personal identifying information from submissions. You should submit only information that you wish to make available publicly. All submissions should refer to File Number SR–NYSE–2009–01 and should be submitted on or before February 6, 2009.

For the Commission, by the Division of Trading and Markets, pursuant to delegated authority.[7]

Florence E. Harmon,

Deputy Secretary.

[FR Doc. E9–931 Filed 1–15–09; 8:45 am]

BILLING CODE 8011–01–P

[4] 15 U.S.C. 78a.

[5] 15 U.S.C. 78s(b)(3)(A).

[6] 17 CFR 240.19b–4(f)(2).

[7] 17 CFR 200.30–3(a)(12).

SECURITIES AND EXCHANGE COMMISSION

[Release No. 34–59231; File No. SR–NYSE–2008–143]

Self-Regulatory Organizations; Notice of Filing and Immediate Effectiveness of Proposed Rule Change by New York Stock Exchange LLC Amending NYSE Rule 103B (''Security Allocation and Reallocation'') to: (1) Prohibit DMM Units From Communicating With Issuers After Receipt of Notice From the Exchange of the Issuer's Impending Listing; (2) Provide DMM Unit Marketing Materials to the Issuer Prior to the Scheduled Interview Rather Than the Day Before; and (3) Allow an Issuer Transferring From NYSE Alternext U.S. LLC to the NYSE To Retain its DMM Unit if Such DMM Unit Is an Approved and Registered DMM on the NYSE

January 12, 2009.

Pursuant to Section 19(b)(1) [1] of the Securities Exchange Act of 1934 (the ''Act''),[2] and Rule 19b–4 thereunder,[3] notice is hereby given that, on December 31, 2008, New York Stock Exchange LLC (''NYSE'' or the ''Exchange'') filed with the Securities and Exchange Commission (the ''Commission'') the proposed rule change as described in Items I and II below, which Items have been prepared by the self-regulatory organization. The Commission is publishing this notice to solicit comments on the proposed rule change from interested persons.

I. Self-Regulatory Organization's Statement of the Terms of Substance of the Proposed Rule Change

The Exchange proposes to amend NYSE Rule 103B (''Security Allocation and Reallocation'') to: (1) Prohibit DMM units from communicating with issuers after receipt of notice from the Exchange of the issuer's impending listing; (2) provide DMM unit marketing materials to the issuer prior to the scheduled interview rather than the day before; and (3) allow an issuer transferring from NYSE Alternext U.S. LLC (''Alternext'') to the NYSE to retain its DMM unit if such DMM unit is an approved and registered DMM on the NYSE.

The text of the proposed rule change is available on the Exchange's Web site (*http://www.nyse.com*), at the Exchange's Office of the Secretary, and at the Commission's Public Reference Room.

[1] 15 U.S.C. 78s(b)(1).

[2] 15 U.S.C. 78a.

[3] 17 CFR 240.19b–4.

II. Self-Regulatory Organization's Statement of the Purpose of, and Statutory Basis for, the Proposed Rule Change

In its filing with the Commission, the self-regulatory organization included statements concerning the purpose of, and basis for, the proposed rule change and discussed any comments it received on the proposed rule change. The text of those statements may be examined at the places specified in Item IV below. The Exchange has prepared summaries, set forth in sections A, B and C below, of the most significant parts of such statements.

A. Self-Regulatory Organization's Statement of the Purpose of, and the Statutory Basis for, the Proposed Rule Change

1. Purpose

The Exchange proposes to amend NYSE Rule 103B (''Security Allocation and Reallocation'') to: (1) Prohibit DMM units from communicating with issuers after receipt of notice from the Exchange of the issuer's impending listing; (2) provide DMM unit marketing materials to the issuer prior to the scheduled interview rather than the day before; and (3) allow an issuer transferring from NYSE Alternext U.S. LLC (''Alternext'') to the NYSE to retain its DMM unit if such DMM unit is an approved and registered DMM on the NYSE.

The Exchange notes that parallel changes are proposed to be made to the rules of the NYSE Alternext Exchange (formerly the American Stock Exchange).[4]

I. Background

On October 24, 2008, the NYSE amended its allocation process to provide issuers with more autonomy in the selection of its assigned DMM unit.[5] The revised allocation process established a single objective measure[6] to determine a DMM unit's eligibility to participate in the allocation process. The single objective measure made it feasible for an issuer to select and conduct interviews of eligible DMM units or delegate the selection to the Exchange.[7] DMM units selected for an interview are notified directly by the Exchange and may provide material to the Exchange which will be given to the issuer the day before the scheduled interview.

II. Proposed Amendments

During the administration of the new allocation process, it has become clear that certain amendments to the rule are required as a result of certain practical considerations that need to be addressed in the application of the rule.

1. Interview Process

The Exchange proposes to amend Section III(A) of NYSE Rule 103B to prohibit DMM units from having contact with an issuer after the Exchange provides notice to DMM units about the issuer's impending listing on the NYSE. Pursuant to the Exchange's former Allocation Policy, specialists were required to cease communication with an issuer once the Exchange issued the invitation for specialists to apply for an issue.

The modification to the allocation process to allow an issuer to select its DMM units from the list of eligible DMM units on the Exchange ended the administrative need for the Exchange to solicit applications from DMM units which would have triggered the prohibition of communication between DMM units and listing companies. Thus, the Exchange inadvertently removed the prohibition of ending communication between the DMM unit and the issuer prior to the interview. Currently NYSE 103B prohibits communication between DMM units and issuers following their interview.

The Exchange still believes that prohibiting communication between DMM units and issuers just prior to the interview is appropriate in order to promote fairness and objectivity in the interview process. The Exchange therefore proposes to amend NYSE Rule 103B, Section III to add a section prohibiting DMM units, or any individuals acting on their behalf, from having any contact with any listing company once the Exchange provides written notice to DMM units that the listing company is listing on the Exchange.

In addition to the above modification related to the interview process, the Exchange further seeks to allow more flexibility in the delivery of DMM marketing materials to an issuer based on the availability of the issuer. Currently, the rule provides that DMM marketing materials are to be provided the day before the interview. The Exchange proposes to amend the language to allow for the marketing materials to be provided prior to the interview. Some issuers that interview at the Exchange may be in transit the day prior to the interview or participating in road shows and business trips and are therefore unavailable to receive the materials the day before the scheduled interview. In those instances the Exchange provides the issuer with the materials the day of the interview. In instances where an issuer is available to receive the marketing materials in advance of the scheduled interview the Exchange would like to be able to provide the materials to the issuer. Accordingly, the Exchange proposes to amend the rule to simply state that the Exchange will provide the issuer with the DMM units' marketing materials prior to the interview.

2. Allocation of Listing Companies Transferring From Alternext to the NYSE

On October 1, 2008, the Exchange completed its acquisition of Alternext.[8] Alternext, similar to the Exchange, operates a DMM system and securities traded on Alternext are assigned to a DMM unit. In certain instances, Alternext DMM units may also be registered DMM units on the NYSE.

In these instances, the Exchange seeks to afford issuers transferring from Alternext the same privileges it affords issuers transferring from its other affiliated Exchange, NYSE Arca.[9] Specifically, the Exchange seeks to amend NYSE Rule 103B to allow an issuer that transfers from Alternext to the NYSE to waive the allocation process in instances where the issuer's

[4] *See* SR–NYSEALTR–2008–21 (to be filed on December 31, 2008).

[5] *See* Securities Exchange Act Release No. 58857 (October 24, 2008), 73 FR 65435 (November 3, 2008) (SR–NYSE–2008–52)(''Allocation Policy''). Specialist units were eliminated and replaced with DMM units in the new Market Model filing. *See* Securities Exchange Act Release No. 58845 (October 24, 2008), 73 FR 64379 (October 29, 2008) (SR–NYSE–2008–46) (''New Market Model'').

[6] DMM units are eligible to participate in the allocation process of a listed security when the DMM unit has not failed to comply with its quoting requirements for ''Less Active'' (any listed security that has a consolidated average daily volume of less than one million shares per calendar month)'' and ''More Active'' (any listed security that has a consolidated average daily volume equal to or greater than one million shares per calendar month)'' securities. Those DMM units that have failed to meet the quoting requirement for a consecutive two month period are ineligible for a minimum of two months following the second consecutive month of its failure to meet its quoting requirement. (''Penalty Period''). The DMM unit must satisfy the quoting requirement for the two consecutive months of the Penalty Period to be eligible to participate in the allocation process. *See* NYSE Rule 103B, Section II(J)(2).

[7] NYSE Rule 103B, Section III.

[8] *See* Securities Exchange Act Release No. 58673 (September 29, 2008), 73 FR 57707 (October 3, 2008) (SR–AMEX–2008–62 and SR–NYSE–2008–60).

[9] *See* Securities Exchange Act Release No. 55641 (April 17, 2007), 72 FR 20396 (April 24, 2007) (SR–NYSE–2007–39) (amending NYSE Rule 103B to allow an issuer to waive the allocation process when the issuer's security was assigned an LMM that was also a registered NYSE specialist, thus affording the issuer to retain the same market maker).

security was assigned to a registered DMM unit that is also an approved and registered DMM unit on the NYSE.[10] In any event, the issuer may still choose to follow the regular allocation process and have its security referred for allocation through the allocation process pursuant to NYSE Rule 103B, Section III. If the listing company chooses to have its DMM unit selected by the Exchange pursuant to NYSE Rule 103B, Section III(B), and requests not to be allocated to the DMM unit that was its Alternext DMM unit, such request will be honored.

The Exchange believes that the proposed rule change is consistent with the goals of the Allocation policy to provide an incentive for ongoing enhancement of the relationship between the listing company and the DMM unit, to encourage continued high performance of the DMM unit by allowing them to use their experience and knowledge of the listing company's securities and to provide the best possible match between the DMM unit and the security.

2. Statutory Basis

The basis under the Act for the proposed rule change is the requirement under Section 6(b)(5),[11] which requires that an exchange have rules that are designed to foster cooperation and coordination with persons engaged in regulating, clearing, settling, processing information with respect to, and facilitating transactions in securities, to remove impediments to and perfect the mechanism of a free and open market and a national market system and, in general, to protect investors and the public interest. The Exchange believes that the proposed amendments are consistent with these objectives. The amendments sought herein seek to alleviate impediments in the administrative process of assigning securities to DMM units which ultimately facilitates the fair and orderly trading in the subject security.

B. Self-Regulatory Organization's Statement on Burden on Competition

The Exchange does not believe that the proposed rule change will impose any burden on competition that is not necessary or appropriate in furtherance of the purposes of the Act.

C. Self-Regulatory Organization's Statement on Comments on the Proposed Rule Change Received from Members, Participants, or Others

No written comments were solicited or received with respect to the proposed rule change.

III. Date of Effectiveness of the Proposed Rule Change and Timing for Commission Action

Because the proposed rule change: (i) Does not significantly affect the protection of investors or the public interest; (ii) does not impose any significant burden on competition; and (iii) does not become operative for 30 days after the date of the filing, or such shorter time as the Commission may designate if consistent with the protection of investors and the public interest, the proposed rule change has become effective pursuant to Section 19(b)(3)(A) of the Act[12] and Rule 19b–4(f)(6) thereunder.[13]

A proposed rule change filed pursuant to Rule 19b–4(f)(6) under the Act[14] normally does not become operative for 30 days after the date of its filing. However, Rule 19b–4(f)(6)(iii)[15] permits the Commission to designate a shorter time if such action is consistent with the protection of investors and the public interest. The Exchange has requested that the Commission waive the 30-day operative delay.

The Commission believes that waiving the 30-day operative delay is consistent with the protection of investors and the public interest because it will allow the Exchange to immediately remove any disparity in the treatment afforded issuers of the NYSE's affiliate exchanges and to further objectivity and fairness of the allocation process by immediately establishing the specific point in time when DMM units must cease communication with issuers prior to interviews. The language being used in this proposed rule filing for the transfer of issuers from NYSE Alternext to NYSE is substantively similar to the language already in place for its other related Exchange, NYSE Arca.[16] Furthermore, the proposed rule filing seeks to restore language regarding the prohibition of communication between the DMM units and the issuer that was inadvertently omitted from the former NYSE Rule 103B to the current NYSE Rule 103B. For these reasons, the Commission designates that the proposed rule change become operative immediately upon filing.[17]

At any time within 60 days of the filing of the proposed rule change, the Commission may summarily abrogate the rule change if it appears to the Commission that such action is necessary or appropriate in the public interest, for the protection of investors, or otherwise in furtherance of the purposes of the Act.

IV. Solicitation of Comments

Interested persons are invited to submit written data, views and arguments concerning the foregoing, including whether the proposed rule change is consistent with the Act. Comments may be submitted by any of the following methods:

Electronic Comments

- Use the Commission's Internet comment form (*http://www.sec.gov/rules/sro.shtml*); or
- Send an e-mail to *rule-comments@sec.gov.* Please include File Number SR–NYSE–2008–143 on the subject line.

Paper Comments

- Send paper comments in triplicate to Elizabeth M. Murphy, Secretary, Securities and Exchange Commission, 100 F Street, NE., Washington, DC 20549–1090.

All submissions should refer to File Number SR–NYSE–2008–143. This file number should be included on the subject line if e-mail is used. To help the Commission process and review your comments more efficiently, please use only one method. The Commission will post all comments on the Commission's Internet Web site (*http://www.sec.gov/rules/sro.shtml*). Copies of the submission, all subsequent amendments, all written statements with respect to the proposed rule change that are filed with the Commission, and all written communications relating to the proposed rule change between the Commission and any person, other than those that may be withheld from the public in accordance with the

[10] Currently, the proposed waiver of the allocation process would occur in very limited circumstances because only one DMM unit is registered on both Alternext and the NYSE.

[11] 15 U.S.C. 78f(b)(5).

[12] 15 U.S.C. 78s(b)(3)(A).

[13] 17 CFR 240.19b–(f)(6). Pursuant to Rule 19b–4(f)(6)(iii) under the Act, the Exchange is required to give the Commission written notice of its intent to file the proposed rule change, along with a brief description and text of the proposed rule change, at least five business days prior to the date of filing of proposed rule change, or such shorter time as designated by the Commission. The Exchange has satisfied this requirement.

[14] 17 CFR 240.19b–4(f)(6).

[15] 17 CFR 240.19b–4(f)(6)(iii).

[16] *See* Securities Exchange Act Release No. 55641 (April 17 2007), 72 FR 20396 (April 24, 2007) (SR–NYSE–2007–39).

[17] For purposes only of waiving the 30-day operative delay, the Commission has considered the proposed rule's impact on efficiency, competition, and capital formation. 15 U.S.C. 78c(f).

provisions of 5 U.S.C. 552, will be available for inspection and copying in the Commission's Public Reference Room, on official business days between the hours of 10 a.m. and 3 p.m. Copies of the filing also will be available for inspection and copying at the principal office of the Exchange. All comments received will be posted without change; the Commission does not edit personal identifying information from submissions. You should submit only information that you wish to make available publicly. All submissions should refer to File Number SR–NYSE–2008–143 and should be submitted on or before February 6, 2009.

For the Commission, by the Division of Trading and Markets, pursuant to delegated authority.[18]

Florence E. Harmon,

Deputy Secretary.

[FR Doc. E9–932 Filed 1–15–09; 8:45 am]

BILLING CODE 8011–01–P

SECURITIES AND EXCHANGE COMMISSION

[Release No. 34–59233; File No. SR–NYSEALTR–2008–21]

Self-Regulatory Organizations; Notice of Filing and Immediate Effectiveness of Proposed Rule Change by NYSE Alternext US LLC Amending NYSE Alternext Equities Rule 103B To Conform to Amendments Filed by the New York Stock Exchange To: (1) Prohibit DMM Units From Communicating With Issuers After Receipt of Notice From the Exchange of the Issuer's Impending Listing; and (2) Provide DMM Unit Marketing Materials to the Issuer Prior to the Scheduled Interview Rather Than the Day Before

January 12, 2009.

Pursuant to Section 19(b)(1)[1] of the Securities Exchange Act of 1934 (the ''Act'')[2] and Rule 19b–4 thereunder,[3] notice is hereby given that on December 31, 2008, NYSE Alternext US LLC (the ''Exchange'' or ''NYSE Alternext'') filed with the Securities and Exchange Commission (the ''Commission'') the proposed rule change as described in Items I and II below, which Items have been prepared by the self-regulatory organization. The Commission is publishing this notice to solicit comments on the proposed rule change from interested persons.

I. Self-Regulatory Organization's Statement of the Terms of Substance of the Proposed Rule Change

The Exchange proposes to amend NYSE Alternext Equities Rule 103B (''Security Allocation and Reallocation'') to conform to amendments filed by the New York Stock Exchange to: (1) Prohibit DMM units from communicating with issuers after receipt of notice from the Exchange of the issuer's impending listing; and (2) provide DMM unit marketing materials to the issuer prior to the scheduled interview rather than the day before.

The text of the proposed rule change is available on the Exchange's Web site at *http://www.nyse.com,* at the Exchange's principal office, and at the Commission's Public Reference Room.

II. Self-Regulatory Organization's Statement of the Purpose of, and Statutory Basis for, the Proposed Rule Change

In its filing with the Commission, the self-regulatory organization included statements concerning the purpose of, and basis for, the proposed rule change and discussed any comments it received on the proposed rule change. The text of those statements may be examined at the places specified in Item IV below. The Exchange has prepared summaries, set forth in sections A, B and C below, of the most significant parts of such statements.

A. Self-Regulatory Organization's Statement of the Purpose of, and the Statutory Basis for, the Proposed Rule Change

1. Purpose

The Exchange proposes to amend NYSE Alternext Equities Rule 103B (''Security Allocation and Reallocation'') to conform with amendments filed by the New York Stock Exchange[4] to: (1) Prohibit DMM units from communicating with issuers after receipt of notice from the Exchange of the issuer's impending listing; and (2) provide DMM unit marketing materials to the issuer prior to the scheduled interview rather than the day before.

I. Background

As described more fully in a related rule filing,[5] NYSE Euronext acquired The Amex Membership Corporation (''AMC'') pursuant to an Agreement and Plan of Merger, dated January 17, 2008 (the ''Merger''). In connection with the Merger, the Exchange's predecessor, the American Stock Exchange LLC (''Amex''), a subsidiary of AMC, became a subsidiary of NYSE Euronext called NYSE Alternext US LLC, and continues to operate as a national securities exchange registered under Section 6 of the Securities Exchange Act of 1934, as amended (the ''Act'').[6] The effective date of the Merger was October 1, 2008.

In connection with the Merger, on December 1, 2008, the Exchange relocated all equities trading conducted on the Exchange legacy trading systems and facilities located at 86 Trinity Place, New York, New York, to trading systems and facilities located at 11 Wall Street, New York, New York (the ''Equities Relocation''). The Exchange's equity trading systems and facilities at 11 Wall Street (the ''NYSE Alternext Trading Systems'') are operated by the NYSE on behalf of the Exchange.[7]

As part of the Equities Relocation, NYSE Alternext adopted NYSE Rules 1–1004, subject to such changes as necessary to apply the Rules to the Exchange, as the NYSE Alternext Equities Rules to govern trading on the NYSE Alternext Trading Systems.[8] The NYSE Alternext Equities Rules, which became operative on December 1, 2008, are substantially identical to the current NYSE Rules 1–1004 and the Exchange continues to update the NYSE Alternext Equities Rules as necessary to conform with rule changes to corresponding NYSE Rules filed by the NYSE.

II. Proposed Amendments

The Exchange proposes to amend Section III (A) of NYSE Alternext Equities Rule 103B to prohibit DMM units from having contact with an issuer after the Exchange provides notice to DMM units about the issuer's impending listing on the Exchange.

[18] 17 CFR 200.30–3(a)(12).

[1] 15 U.S.C. 78s(b)(1).

[2] 15 U.S.C. 78a.

[3] 17 CFR 240.19b–4.

[4] *See* Securities Exchange Act Release No. 59231 (January 12, 2009) (SR–NYSE–2008–143).

[5] *See* Securities Exchange Act Release No. 58673 (September 29, 2008), 73 FR 57707 (October 3, 2008) (SR–NYSE–2008–60 and SR–Amex 2008–62) (approving the Merger).

[6] 15 U.S.C. 78f.

[7] *See* Securities Exchange Act Release No. 58705 (October 1, 2008), 73 FR 58995 (October 8, 2008) (SR–Amex 2008–63) (approving the Equities Relocation).

[8] *See* Securities Exchange Act Release No. 58705 (October 1, 2008), 73 FR 58995 (October 8, 2008) (SR–Amex 2008–63) (approving the Equities Relocation); Securities Exchange Act Release No. 58833 (October 22, 2008), 73 FR 64642 (October 30, 2008) (SR–NYSE–2008–106) *and* Securities Exchange Act Release No. 58839 (October 23, 2008), 73 FR 64645 (October 30, 2008) (SR–NYSEALTR–2008–03) (together, approving the Bonds Relocation); Securities Exchange Act Release No. 59022 (November 26, 2008), 73 FR 73683 (December 3, 2008) (SR–NYSEALTR–2008–10) (adopting amendments to NYSE Alternext Equities Rules to track changes to corresponding NYSE Rules); Securities Exchange Act Release No. 59027 (November 28, 2008), 73 FR 73681 (December 3, 2008) (SR–NYSEALTR–2008–11) (adopting amendments to Rule 62—NYSE Alternext Equities to track changes to corresponding NYSE Rule 62).

Currently NYSE Alternext Equities Rule 103B prohibits communication between DMM units and issuers following their interview. The Exchange believes that prohibiting communication between DMM units and issuers just prior to the interview is appropriate in order to promote fairness and objectivity in the interview process. The Exchange therefore proposes to amend NYSE Alternext Equities Rule 103B, Section III to add a section prohibiting DMM units, or any individuals acting on their behalf, from having any contact with any listing company once the Exchange provides written notice to the DMM units that the listing company is listing on the Exchange.

In addition to the above modification related to the interview process, the Exchange further seeks to allow more flexibility in the delivery of DMM marketing materials to an issuer based on the availability of the issuer. Currently, the rule provides that DMM marketing materials are to be provided the day before the interview. The Exchange proposes to amend the language to allow for the marketing materials to be provided prior to the interview. Some issuers that interview at the Exchange may be in transit the day prior to the interview or participating in road shows and business trips and are therefore unavailable to receive the materials the day before the scheduled interview. In those instances the Exchange provides the issuer with the materials the day of the interview. In instances where an issuer is available to receive the marketing materials in advance of the scheduled interview the Exchange would like to be able to provide the materials to the issuer. Accordingly, the Exchange proposes to amend the rule to simply state that the Exchange will provide the issuer with the DMM units' marketing materials prior to the interview.

The Exchange proposes these amendments to conform the allocation process of NYSE Alternext to the allocation process of its affiliated Exchange, the New York Stock Exchange LLC.

2. Statutory Basis

The basis under the Act for the proposed rule change is the requirement under Section 6(b)(5),[9] which requires that an exchange have rules that are designed to foster cooperation and coordination with persons engaged in regulating, clearing, settling, processing information with respect to, and facilitating transactions in securities, to remove impediments to and perfect the mechanism of a free and open market and a national market system and, in general, to protect investors and the public interest. The Exchange believes that the proposed amendments are consistent with these objectives. The amendments sought herein seek to alleviate impediments in the administrative process of assigning securities to DMM units which ultimately facilitates the fair and orderly trading in the subject security.

B. Self-Regulatory Organization's Statement on Burden on Competition

The Exchange does not believe that the proposed rule change will impose any burden on competition that is not necessary or appropriate in furtherance of the purposes of the Act.

C. Self-Regulatory Organization's Statement on Comments on the Proposed Rule Change Received From Members, Participants, or Others

No written comments were solicited or received with respect to the proposed rule change.

III. Date of Effectiveness of the Proposed Rule Change and Timing for Commission Action

Because the proposed rule change: (i) Does not significantly affect the protection of investors or the public interest; (ii) does not impose any significant burden on competition; and (iii) does not become operative for 30 days after the date of the filing, or such shorter time as the Commission may designate if consistent with the protection of investors and the public interest, the proposed rule change has become effective pursuant to Section 19(b)(3)(A) of the Act[10] and Rule 19b–4(f)(6) thereunder.[11]

The Exchange has requested that the Commission waive the 30-day operative delay in this case. The Commission believes that waiving the 30-day operative delay is consistent with the protection of investors and the public interest because it will immediately establish the specific point in time when DMM units must cease communication with issuers prior to interviews. In addition, this proposed rule change is substantially similar to an NYSE proposal.[12] For these reasons, the Commission designates that the proposed rule change become operative immediately upon filing.[13]

At any time within 60 days of the filing of the proposed rule change, the Commission may summarily abrogate the rule change if it appears to the Commission that such action is necessary or appropriate in the public interest, for the protection of investors, or otherwise in furtherance of the purposes of the Act.

IV. Solicitation of Comments

Interested persons are invited to submit written data, views, and arguments concerning the foregoing, including whether the proposed rule change is consistent with the Act. Comments may be submitted by any of the following methods:

Electronic Comments

- Use the Commission's Internet comment form (*http://www.sec.gov/rules/sro.shtml*); or
- Send an e-mail to *rule-comments@sec.gov*. Please include File Number SR–NYSEALTR–2008–21 on the subject line.

Paper Comments

- Send paper comments in triplicate to Elizabeth M. Murphy, Secretary, Securities and Exchange Commission, 100 F Street, NE., Washington, DC 20549–1090.

All submissions should refer to File Number SR–NYSEALTR–2008–21. This file number should be included on the subject line if e-mail is used. To help the Commission process and review your comments more efficiently, please use only one method. The Commission will post all comments on the Commission's Internet Web site (*http://www.sec.gov/rules/sro.shtml*). Copies of the submission, all subsequent amendments, all written statements with respect to the proposed rule change that are filed with the Commission, and all written communications relating to the proposed rule change between the Commission and any person, other than those that may be withheld from the public in accordance with the provisions of 5 U.S.C. 552, will be available for inspection and copying in the Commission's Public Reference Room, on official business days between the hours of 10 a.m. and 3 p.m. Copies of the filing also will be available for

[9] 15 U.S.C. 78f(b)(5).

[10] 15 U.S.C. 78s(b)(3)(A).

[11] 17 CFR 240.19b–4(f)(6). Pursuant to Rule 19b-4(f)(6)(iii) under the Act, the Exchange is required to give the Commission written notice of its intent to file the proposed rule change, along with a brief description and text of the proposed rule change, at least five business days prior to the date of filing of the proposed rule change, or such shorter time as designated by the Commission. The Exchange has satisfied this requirement.

[12] *See supra* note 4.

[13] For purposes only of waiving the 30-day operative delay, the Commission has considered the proposed rule's impact on efficiency, competition, and capital formation. See 15 U.S.C. 78c(f).

inspection and copying at the principal office of the Exchange. All comments received will be posted without change; the Commission does not edit personal identifying information from submissions. You should submit only information that you wish to make available publicly. All submissions should refer to File Number SR–NYSEALTR–2008–21 and should be submitted on or before February 6, 2009.

For the Commission, by the Division of Trading and Markets, pursuant to delegated authority.[14]

Florence E. Harmon,

Deputy Secretary.

[FR Doc. E9–930 Filed 1–15–09; 8:45 am]

BILLING CODE 8011–01–P

[14] 17 CFR 200.30–3(a)(12).

SOCIAL SECURITY ADMINISTRATION

[Docket No. SSA 2008–0054]

Privacy Act of 1974, as Amended; Computer Matching Program (SSA/Department of the Treasury, Bureau of the Public Debt (BPD))—Match Number 1038

AGENCY: Social Security Administration (SSA).

ACTION: Notice of the renewal of an existing computer matching program which is scheduled to expire on December 25, 2008.

SUMMARY: In accordance with the provisions of the Privacy Act, as amended, we are announcing the renewal of an existing computer matching program we are currently conducting with BPD.

DATES: We will file a report of the subject matching program with the Committee on Homeland Security and Governmental Affairs of the Senate, the Committee on Government Reform of the House of Representatives and the Office of Information and Regulatory Affairs, Office of Management and Budget (OMB). The matching program will be effective as indicated below.

ADDRESSES: Interested parties may comment on this notice by either telefaxing to (410) 965–0201 or writing to the Deputy Commissioner for Budget, Finance and Management, 800 Altmeyer Building, 6401 Security Boulevard, Baltimore, MD 21235–6401. All comments received will be available for public inspection at this address.

FOR FURTHER INFORMATION CONTACT: The Deputy Commissioner for Budget, Finance and Management as shown above.

SUPPLEMENTARY INFORMATION:

A. General

The Computer Matching and Privacy Protection Act of 1988 (Pub. L. 100–503), amended the Privacy Act (5 U.S.C. 552a) by describing the manner in which computer matching involving Federal agencies could be performed and adding certain protections for individuals applying for and receiving Federal benefits. Section 7201 of the Omnibus Budget Reconciliation Act of 1990 (Pub. L. 101–508) further amended the Privacy Act regarding protections for such persons.

The Privacy Act, as amended, regulates the use of computer matching by Federal agencies when records in a system of records are matched with other Federal, State, or local government records. It requires Federal agencies involved in computer matching programs to:

(1) Negotiate written agreements with the other agency or agencies participating in the matching programs;

(2) Obtain the approval of the matching agreement by the Data Integrity Boards (DIB) of the participating Federal agencies;

(3) Publish notice of the computer matching program in the **Federal Register**;

(4) Furnish detailed reports about matching programs to Congress and OMB;

(5) Notify applicants and beneficiaries that their records are subject to matching; and

(6) Verify match findings before reducing, suspending, terminating or denying an individual's benefits or payments.

B. SSA Computer Matches Subject to the Privacy Act

We have taken action to ensure that all of SSA's computer matching programs comply with the requirements of the Privacy Act, as amended.

Dated: December 4, 2008.

Mary Glenn-Croft,

Deputy Commissioner for Budget, Finance and Management.

Notice of Computer Matching Program, Social Security Administration (SSA) With the Bureau of the Public Debt (BPD)

A. Participating Agencies

SSA and BPD.

B. Purpose of the Matching Program

The purpose of this matching program is to establish the conditions, safeguards and procedures for BPD's disclosure of certain savings security information to SSA. (The term ''savings security'' means Series E, EE or I United States Savings Securities.) This disclosure will provide SSA with information necessary to verify eligibility and payment amounts of individuals under the Supplemental Security Income (SSI) program. The SSI program was created under title XVI of the Social Security Act (the Act) to provide benefits under the rules of that title to individuals with income and resources below levels established by law and regulations.

C. Authority for Conducting the Matching Program

Sections 1631(e)(1)(B) and (f) of the Act (42 U.S.C. 1383(e)(1)(B) and (f)).

D. Categories of Records and Individuals Covered by the Matching Program

We will provide BPD with a finder file extracted from SSA's Supplemental Security Income Record and Special Veterans Benefits system of records (SSA 60–0103 full text last published in the **Federal Register** on January 11, 2006 at 71 FR 1795, 1830), containing Social Security numbers of persons who have applied for, or receive, SSI payments. This information will be matched with BPD files in BPD's savings-type securities registration systems of records (United States Savings Type Securities and Retail Treasury Securities Access Application) and a reply file of matched records will be furnished to SSA. These records are included under the systems of records Treasury/BPD.002, United States Savings Type Securities, and Treasury/BPD.008, Retail Treasury Securities Access Application, last published in the **Federal Register** on July 23, 2008 at 73 FR 42906 and 42918, respectively. Upon receipt of BPD's reply file, we will match identifying information from the BPD file with SSA's records to determine preliminarily whether the data pertain to the relevant SSI applicant or recipient before beginning the process of verifying savings security ownership and taking any necessary benefit actions.

E. Inclusive Dates of the Matching Program

The matching program will become effective upon signing of the agreement by both parties to the agreement and approval of the agreement by the Data Integrity Boards of the respective agencies, but no sooner than 40 days after notice of this matching program is sent to Congress and the Office of Management and Budget, or 30 days after publication of this notice in the **Federal Register**, whichever date is later. The matching program will continue for 18 months from the

effective date and may be extended for an additional 12 months thereafter, if certain conditions are met.

[FR Doc. E9–952 Filed 1–15–09; 8:45 am]

BILLING CODE 4191–02–P

DEPARTMENT OF STATE

[Public Notice: 6485]

60–Day Notice of Proposed Information Collection: Request for Commodity Jurisdiction (CJ) Determination; OMB Control Number 1405–0163.

ACTION: Notice of request for public comments.

SUMMARY: The Department of State is seeking Office of Management and Budget (OMB) approval for information collection described below. The purpose of this notice is to allow 60 days for public comment in the **Federal Register** preceding submission to OMB. We are conducting this process in accordance with the Paperwork Reduction Act of 1995.

Title of Information Collection: Request for Commodity Jurisdiction (CJ) Determination.

OMB Control Number: 1405–0163.

Type of Request: Extension of currently approved collection.

Originating Office: Bureau of Political Military Affairs, Directorate of Defense Trade Controls, PM/DDTC.

Form Number: None.

Respondents: Business organizations.

Estimated Number of Respondents: 425 (total).

Estimated Number of Responses: 465 (per year).

Average Hours per Response: 10 hours.

Total Estimated Burden: 4,650 hours (per year).

Frequency: On Occasion.

Obligation To Respond: Voluntary.

DATES: The Department will accept comments from the public up to 60 days from March 17, 2009.

ADDRESSES: Comments and questions should be directed to Mary F. Sweeney, Office of Defense Trade Controls Policy, Department of State, who may be reached via the following methods:

E-mail: Sweeneymf@state.gov.

Mail: Mary F. Sweeney, SA–1, 12th Floor, Directorate of Defense Trade Controls, Bureau of Political Military Affairs, U.S. Department of State, Washington, DC 20522–0112.

Fax: 202–261–8199.

You must include the information collection title in the subject line of your message/letter.

FOR FURTHER INFORMATION CONTACT: Direct requests for additional information regarding the collection listed in this notice, including a copy of the supporting document, to Mary F. Sweeney, PM/DDTC, SA–1, 12th Floor, Directorate of Defense Trade Controls, Bureau of Political Military Affairs, U.S. Department of State, Washington, DC 20522–0112, who may be reached via phone at (202) 663–2865, or via e-mail at *sweeneymf@state.gov.*

SUPPLEMENTARY INFORMATION: We are soliciting public comments to permit the Department to:

Evaluate whether the proposed collection of information is necessary for the proper performance of our functions.

Evaluate the accuracy of our estimate of the burden of the proposed collection, including the validity of the methodology and assumptions used.

Enhance the quality, utility, and clarity of the information to be collected.

Minimize the reporting burden on those who are to respond, including the use of automated collection techniques or other forms of technology.

Abstract of proposed collection: The information will be used to evaluate whether or not a particular defense article or defense service is covered by the U.S. Munitions List; to change the U.S. Munitions List category designation; to remove a defense article from the U.S. Munitions List; or to reconsider a previous commodity jurisdiction determination.

Methodology: This information collection is an exchange of letters and may be sent to the Directorate of Defense Controls via mail.

Dated: January 9, 2009.

Frank J. Ruggiero,

Deputy Assistant Secretary for Defense Trade and Regional Security, Bureau of Political-Military Affairs, Department of State.

[FR Doc. E9–821 Filed 1–15–09; 8:45 am]

BILLING CODE 4710–27–P

DEPARTMENT OF STATE

[Public Notice 6486]

Nonproliferation Sanctions

ACTION: Imposition of Sanctions on Persons Associated With the A.Q. Khan Nuclear Proliferation Network.

SUMMARY:

Nuclear Proliferation Prevention Act

A determination has been made that foreign persons have engaged in activities that require the imposition of measures pursuant to the Nuclear Proliferation Prevention Act (NPPA), 22 U.S.C. 6301. Pursuant to the NPPA, the United States determined on January 9, 2009 that the following foreign persons have materially and with requisite knowledge contributed, through an export of certain goods or technology, to the efforts by a non-nuclear weapon state to acquire unsafeguarded special nuclear material or to use, develop, produce, stockpile, or otherwise acquire any nuclear explosive device that requires the imposition of the sanctions described in Sections 6301(C)(1) of 22 U.S.C. 6301:

Selim Alguadis;
Kursad Zafer Cire;
Muhammad Nasim ud Din;
EKA Elektronik Kontrol Aletleri Sanayi ve Ticaret A.S.;
ETI Elektroteknik Sanayi ve Ticaret A.S.;
Muhammad Farooq;
Paul Griffin;
Peter Griffin;
Abdul Qadeer Khan;
Shamsul Bahrin bin Rukiban;
Buhary Seyed Abu Tahir; and
Shah Hakim Shahnazim Zain.

Accordingly, the following sanctions are being imposed on these persons:

(A) The United States shall not procure, or enter into any contract for the procurement of, any goods or services from these persons.

These measures become effective immediately and shall be implemented by the responsible departments and agencies of the United States Government as provided in the NPPA.

Export Import Bank Act

A determination was made on January 9, 2009 that foreign persons have engaged in activities that require the imposition of measures pursuant to Section 2(b)(4) of the Export Import Bank Act of 1945, 12 U.S.C. 635(b)(4). Specifically, the U.S. Government determined that the following foreign persons knowingly aided or abetted, after September 23, 1996, a non-nuclear weapon state to acquire unsafeguarded special nuclear material:

Selim Alguadis;
Kursad Zafer Cire;
Muhammad Nasim ud Din;
EKA Elektronik Kontrol Aletleri Sanayi ve Ticaret A.S.;
ETI Elektroteknik Sanayi ve Ticaret A.S.;
Muhammad Farooq;
Daniel Geiges;
Paul Griffin;
Peter Griffin;
Abdul Qadeer Khan;
Gotthard Lerch;

Shamsul Bahrin bin Rukiban;
Buhary Seyed Abu Tahir;
Gerhard Wisser; and,
Shah Hakim Shahnazim Zain.

Accordingly, the following sanctions are being imposed on these persons:

(A) The Board of Directors of the Export Import Bank shall not give approval to guarantee, insure, or extend credit, or participate in the extension of credit in support of United States exports.

These measures become effective immediately and shall be implemented by the responsible departments and agencies of the United States Government as provided in the Export Import Bank Act of 1945 (as amended).

Executive Order 12938

Pursuant to the authorities vested in the President by the Constitution and the laws of the United States of America, including the International Emergency Economic Powers Act (50 U.S.C. 1701 *et seq.*) (IEEPA), the National Emergencies Act (50 U.S.C. 1601 *et seq.*), the Arms Export Control Act (22 U.S.C. 2751 *et seq.*), and Section 301 of title 3, United States Code, and Executive Order 12938 of November 14, 1994, as amended, the U.S. Government determined that the following entities have engaged in proliferation activities that require the imposition of measures pursuant to sections 4(b), 4(c), and 4(d) of Executive Order 12938:

Selim Alguadis (Turkey);
Kursad Zafer Cire (Turkey);
Muhammad Nasim ud Din (Pakistan);
EKA Elektronik Kontrol Aletleri Sanayi ve Ticaret A.S. (Turkey);
ETI Elektroteknik Sanayi ve Ticaret A.S. (Turkey);
Muhammad Farooq (Pakistan);
Daniel Geiges (Switzerland);
Paul Griffin (United Kingdom);
Peter Griffin (United Kingdom);
Abdul Qadeer Khan (Pakistan);
Gotthard Lerch (Germany);
Shamsul Bahrin bin Rukiban (Malaysia);
Buhary Seyed Abu Tahir (Sri Lanka);
Tradefin Engineering (South Africa);
Gerhard Wisser (Germany); and,
Shah Hakim Shahnazim Zain (Malaysia).

Accordingly, pursuant to the provisions of Executive Order 12938, the following measures are imposed on these entities, and as applicable, their subunits, and successors for two years:

(A) No department or agency of the United States Government may procure or enter into any contract for the procurement of any goods, technology, or services from these entities;

(B) No department or agency of the United States Government may provide any assistance to these entities, and none of these entities shall be eligible to participate in any assistance program of the United States Government.

(C) The Secretary of the Treasury shall prohibit the importation into the United States of any goods, technology, or services produced or provided by these entities, other than information or informational materials within the meaning of section 203(b)(3) of the International Emergency Economic Powers Act (50 U.S.C. 1702(b)(3)).

These measures become effective immediately and shall be implemented by the responsible departments and agencies as provided in Executive Order 12938.

Executive Order 13382

Pursuant to the authority in section 1(ii) of Executive Order 13382, ''Blocking Property of Weapons of Mass Destruction Proliferators and Their Supporters'', the United States Government determined on January 9, 2009 that foreign persons have engaged, or attempted to engage, in activities or transactions that have materially contributed to, or pose a risk of materially contributing to, the proliferation of weapons of mass destruction or their means of delivery. The following foreign persons' property and interests in property are blocked pursuant to Executive Order 13382:

1. ALGUADIS, Selim; DOB 27 May 1944; POB Turkey; Nationality Turkey; Passport 585843 (Turkey) issued 11 November 1999 in Istanbul;

2. CIRE, Kursad Zafer (a.k.a. CIRE, Kursat Zafer); DOB 30 August 1967; POB Germany; Nationality Turkey; Passport 778456 (Turkey) issued 14 May 1997 in Istanbul expired 13 May 2007;

3. FAROOQ, Muhammad; DOB 12 March 1949; Nationality Pakistan; Passport S122252 (Pakistan);

4. GEIGES, Daniel; DOB 25 January 1938; POB Lachen, Switzerland; Nationality Switzerland; Passport 8071366 (Switzerland);

5. GRIFFIN, Paul Nicholas; DOB 16 February 1964; Nationality United Kingdom;

6. GRIFFIN, Peter; DOB 9 September 1935; POB Oxford, United Kingdom; Nationality United Kingdom; Passport B401584 (United Kingdom) issued 28 September 1989 in Newport, Gwent, expired 28 September 1999; Passport B109455 (United Kingdom) issued 3 October 1979;

7. KHAN, Abdul Qadeer (a.k.a. ZAMAN, Haydar); DOB 27 April 1936; POB Bhopal, India; Nationality Pakistan; Passport D000428 (Pakistan);

8. LERCH, Gotthard; DOB 21 December 1942; POB Germany; Nationality German; Passport 3545767791D (Germany) issued 7 August 1998 at General Consulate, Zurich expired 6 August 2008; alt. Passport 3545767791 (Germany); Kreuzbergstrasse 4, 9472 Grabs, St. Gallen Canton, Switzerland;

9. TAHIR, Buhary Seyed Abu; DOB 17 April 1959; POB Chennai, India; Nationality Sri Lanka; Passport M2068357 (Sri Lanka) issued 4 September 2001 in Colombo expired September 2006; Passport M1754102 (Sri Lanka) issued 16 March 1999 expired 16 March 2004;

10. WISSER, Gerhard; DOB 2 July 1939; POB Lohne, Germany; Nationality German; Passport 3139001443 (Germany).

These measures become effective immediately and shall be implemented by the responsible departments and agencies as provided in Executive Order 13382.

FOR FURTHER INFORMATION CONTACT: Director, Office of Counterproliferation Initiatives, Bureau of International Security and Nonproliferation, Department of State, Washington, DC 20520, tel.: 202/647–5193.

Dated: January 9, 2009.

Patricia A. McNerney,

Acting Assistant Secretary of State, Bureau of International Security and Nonproliferation, Department of State.

[FR Doc. E9–820 Filed 1–15–09; 8:45 am]

BILLING CODE 4710–27–P

DEPARTMENT OF TRANSPORTATION

Office of the Secretary

Notice of Applications for Certificates of Public Convenience and Necessity and Foreign Air Carrier Permits Filed Under Subpart B (Formerly Subpart Q) During the Week Ending December 20, 2008

The following Applications for Certificates of Public Convenience and Necessity and Foreign Air Carrier Permits were filed under Subpart B (formerly Subpart Q) of the Department of Transportation's Procedural Regulations (See 14 CFR 301.201 et seq.).

The due date for Answers, Conforming Applications, or Motions to Modify Scope are set forth below for each application. Following the Answer period DOT may process the application by expedited procedures. Such procedures may consist of the adoption of a show-cause order, a tentative order, or in appropriate cases a final order without further proceedings.

Docket Number: DOT–OST–2008–0390.

Date Filed: December 18, 2008.

Due Date for Answers, Conforming Applications, or Motion to Modify Scope: January 8, 2009.

Description: Application of Aerovias de Integracion Regional, AIRES S.A. (''AIRES'') requesting a foreign air carrier permit and exemption authority to engage in scheduled transportation of persons, property and mail between Bogota, Cartagena, and Barranguilla in Colombia, on the one hand, and Fort Lauderdale, Florida and New York (JFK), on the other hand.

Docket Number: DOT–OST–2008–0391.

Date Filed: December 19, 2008.

Due Date for Answers, Conforming Applications, or Motion to Modify Scope: January 9, 2009.

Description: Application of Spirit Airlines, Inc., requesting an exemption and a certificate of public convenience and necessity authorizing it to provide scheduled foreign air transportation of persons, property and mail between Fort Lauderdale, Florida and Armenia, Colombia.

Renee V. Wright,

Program Manager, Docket Operations, Federal Register Liaison.

[FR Doc. E9–939 Filed 1–15–09; 8:45 am]

BILLING CODE 4910–9X–P

DEPARTMENT OF TRANSPORTATION

Federal Aviation Administration

Seventh Meeting, Special Committee 211, Nickel-Cadmium, Lead Acid and Rechargeable Lithium Batteries

AGENCY: Federal Aviation Administration (FAA), DOT.

ACTION: Notice of RTCA Special Committee 211, Nickel-Cadmium, Lead Acid and Rechargeable Lithium Batteries.

SUMMARY: The FAA is issuing this notice to advise the public of a meeting of RTCA Special Committee 211, Nickel-Cadmium, Lead Acid and Rechargeable Lithium Batteries.

DATES: The meeting will be held February 18–19, 2009 from 9 a.m.–5 p.m.

ADDRESSES: The meeting will be held at RTCA, Inc., 1828 L Street, NW., Suite 805, Washington, DC 20036, Colson Board Room.

FOR FURTHER INFORMATION CONTACT: RTCA Secretariat, 1828 L Street, NW., Suite 805, Washington, DC 20036; telephone (202) 833–9339; fax (202) 833–9434; Web site *http://www.rtca.org* for directions.

SUPPLEMENTARY INFORMATION: Pursuant to section 10(a) (2) of the Federal Advisory Committee Act (Pub. L. 92–463, 5 U.S.C., Appendix 2), notice is hereby given for a Special Committee 211 meeting. The agenda will include:

- Opening Plenary Session (Welcome, Introductions, and Administrative Remarks, Agenda Overview).
- Review/Approval of the Sixth Meeting Summary, RTCA Paper No. 047–08/SC211–017.
- Discuss steps necessary to incorporate NiMh technology into DO–293 as requested by the FAA.
- Address other changes proposed for DO–293 based on MOPS usage experience.
- Address other changes proposed for DO–311 based on MOPS usage experience.

Attendance is open to the interested public but limited to space availability. With the approval of the chairmen, members of the public may present oral statements at the meeting. Persons wishing to present statements or obtain information should contact the person listed in the **FOR FURTHER INFORMATION CONTACT** section. Members of the public may present a written statement to the committee at any time.

Issued in Washington, DC, on January 9, 2009.

Francisco Estrada C.,

RTCA Advisory Committee.

[FR Doc. E9–819 Filed 1–15–09; 8:45 am]

BILLING CODE 4910–13–P

DEPARTMENT OF TRANSPORTATION

Federal Aviation Administration

[Summary Notice No. PE–2008–49]

Petition for Exemption; Summary of Petition Received

AGENCY: Federal Aviation Administration (FAA), DOT.

ACTION: Notice of petition for exemption received.

SUMMARY: This notice contains a summary of a petition seeking relief from specified requirements of 14 CFR. The purpose of this notice is to improve the public's awareness of, and participation in, this aspect of FAA's regulatory activities. Neither publication of this notice nor the inclusion or omission of information in the summary is intended to affect the legal status of the petition or its final disposition.

DATE: Comments on this petition must identify the petition docket number involved and must be received on or before February 5, 2009.

ADDRESSES: You may send comments identified by Docket Number FAA–2008–1266 using any of the following methods:

- *Government-wide rulemaking Web site:* Go to *http://www.regulations.gov* and follow the instructions for sending your comments electronically.
- *Mail:* Send comments to the Docket Management Facility; U.S. Department of Transportation, 1200 New Jersey Avenue, SE., West Building Ground Floor, Room W12–140, Washington, DC 20590.
- *Fax:* Fax comments to the Docket Management Facility at 202–493–2251.
- *Hand Delivery:* Bring comments to the Docket Management Facility in Room W12–140 of the West Building Ground Floor at 1200 New Jersey Avenue, SE., Washington, DC, between 9 a.m. and 5 p.m., Monday through Friday, except Federal holidays.

Privacy: We will post all comments we receive, without change, to *http://www.regulations.gov*, including any personal information you provide. Using the search function of our docket Web site, anyone can find and read the comments received into any of our dockets, including the name of the individual sending the comment (or signing the comment for an association, business, labor union, etc.). You may review DOT's complete Privacy Act Statement in the **Federal Register** published on April 11, 2000 (65 FR 19477–78).

Docket: To read background documents or comments received, go to *http://www.regulations.gov* at any time or to the Docket Management Facility in Room W12–140 of the West Building Ground Floor at 1200 New Jersey Avenue, SE., Washington, DC, between 9 a.m. and 5 p.m., Monday through Friday, except Federal holidays.

FOR FURTHER INFORMATION CONTACT: Laverne Brunache (202) 267–3133 or Tyneka Thomas (202) 267–7626, Office of Rulemaking, Federal Aviation Administration, 800 Independence Avenue, SW., Washington, DC 20591.

This notice is published pursuant to 14 CFR 11.85.

Issued in Washington, DC, on January 13, 2009.

Pamela Hamilton-Powell,

Director, Office of Rulemaking.

Petition for Exemption

Docket No.: FAA–2008–1266.

Petitioner: Geo Vantage, Inc.

Section of 14 CFR Affected: 14 CFR 91.327(a)(1) and (2).

Description of Relief Sought: Geo Vantage Inc. requests an exemption

from 14 CFR § 91.327(a)(1) and (2) to conduct aerial surveying with a Remos GX, a special light-sport aircraft, for compensation within and outside the U.S.

[FR Doc. E9–866 Filed 1–15–09; 8:45 am]

BILLING CODE 4910–13–P

DEPARTMENT OF TRANSPORTATION

Federal Aviation Administration

[Summary Notice No. PE–2009–07]

Petitions for Exemption; Summaries of Petitions Received

AGENCY: Federal Aviation Administration (FAA), DOT.

ACTION: Notice of petitions for exemption received.

SUMMARY: This notice contains summaries of two petitions seeking relief from specified requirements of 14 CFR. The purpose of this notice is to improve the public's awareness of, and participation in, this aspect of FAA's regulatory activities. Neither publication of this notice nor the inclusion or omission of information in the summaries is intended to affect the legal status of the petitions or their final dispositions.

DATES: Comments on these petitions must identify the petition docket number involved and must be received on or before January 20, 2009.

ADDRESSES: You may send comments identified by Docket Number FAA–2008–0799 or Docket Number FAA–2008–0800 using any of the following methods:

- *Government-wide rulemaking Web site:* Go to *http://www.regulations.gov* and follow the instructions for sending your comments electronically.
- *Mail:* Send comments to the Docket Management Facility; U.S. Department of Transportation, 1200 New Jersey Avenue, SE., West Building Ground Floor, Room W12–140, Washington, DC 20590.
- *Fax:* Fax comments to the Docket Management Facility at 202–493–2251.
- *Hand Delivery:* Bring comments to the Docket Management Facility in Room W12–140 of the West Building Ground Floor at 1200 New Jersey Avenue, SE., Washington, DC, between 9 a.m. and 5 p.m., Monday through Friday, except Federal holidays.

Privacy: We will post all comments we receive, without change, to *http://www.regulations.gov,* including any personal information you provide. Using the search function of our docket Web site, anyone can find and read the comments received into any of our dockets, including the name of the individual sending the comment (or signing the comment for an association, business, labor union, etc.). You may review DOT's complete Privacy Act Statement in the **Federal Register** published on April 11, 2000 (65 FR 19477–78).

Docket: To read background documents or comments received, go to *http://www.regulations.gov* at any time or to the Docket Management Facility in Room W12–140 of the West Building Ground Floor at 1200 New Jersey Avenue, SE., Washington, DC, between 9 a.m. and 5 p.m., Monday through Friday, except Federal holidays.

FOR FURTHER INFORMATION CONTACT: Annette K. Kovite, ANM–113, Transport Airplane Directorate, 1601 Lind Avenue, SW., Renton, WA 98055–4056, phone-425–227–1262, e-mail-*Annette.Kovite@faa.gov.*

This notice is published pursuant to 14 CFR 11.85.

Issued in Washington, DC, on January 13, 2009.

Pamela Hamilton-Powell,

Director, Office of Rulemaking.

Petition for Exemption

Docket No.: FAA–2008–0799.

Petitioner: The Boeing Company.

Sections of 14 CFR Affected: §§ 26.47 and 26.49.

Description of Relief Sought: Exemption from the damage tolerance data requirements of §§ 26.47 and 26.49 for alterations and repairs to alterations. The exemption requested is for certain supplemental type certificates installed on Boeing Model 747 and 757 military commercial derivative airplanes.

Petition for Exemption

Docket No.: FAA–2008–0800.

Petitioner: The Boeing Company.

Sections of 14 CFR Affected: §§ 26.47 and 26.49.

Description of Relief Sought: Exemption from the damage tolerance data requirements of §§ 26.47 and 26.49 for alterations and repairs to alterations. The exemption requested is for certain supplemental type certificates installed on the following military airplanes: Boeing Models 737–2NI, 767–27C, 767–2FK, and 767–2EY.

[FR Doc. E9–865 Filed 1–15–09; 8:45 am]

BILLING CODE 4910–13–P

DEPARTMENT OF TRANSPORTATION

Federal Highway Administration

Tiered Environmental Impact Statement: Sandoval County and Bernalillo County, New Mexico

AGENCY: Federal Highway Administration (FHWA), USDOT.

ACTION: Notice of intent.

SUMMARY: The FHWA is issuing this notice to advise the public and other agencies that a tiered environmental impact statement will be prepared for a proposed transportation corridor in Sandoval County and Bernalillo County, New Mexico. The objective of the tiered EIS is to evaluate right-of-way preservation for the proposed corridor.

FOR FURTHER INFORMATION CONTACT: Nicholas Finch, District Engineer, Federal Highway Administration, New Mexico Division, 4001 Office Court Drive, Suite 801, Santa Fe, New Mexico 87507, Telephone (505) 820–2039; or, Phillip Rios, Sandoval County Public Works Director, Box 40, Bernalillo, New Mexico 87004, Telephone (505) 771–3312.

SUPPLEMENTARY INFORMATION: The FHWA, in cooperation with the New Mexico Department of Transportation (NMDOT) and Sandoval County, will prepare a tiered environmental impact statement (tiered EIS) to preserve right-of-way for a proposed transportation corridor located in Sandoval County and Bernalillo County, New Mexico. The purpose of the tiered EIS is to determine the alignment and right-of-way needs and to evaluate impacts to the natural and human environment for a future transportation corridor that would connect Interstate 40 and U.S. 550 west of the Albuquerque metropolitan area. The proposed corridor would begin near milepost 142 on Interstate 40. From its start at I–40, the proposed roadway would extend in a northerly direction for approximately 23 miles. At this point, the route would turn in an easterly direction and continue to its terminus at U.S. 550 near milepost 7.2. The total length of the proposed corridor is approximately 39 miles.

The purpose of first tier EIS is limited to establishing the alignment and right-of-way boundaries for the proposed corridor. It is not intended to authorize construction of a new roadway or any portion thereof. Authorization for construction will require the preparation of second tier environmental documents.

The proposed transportation corridor is considered necessary to provide

future roadways and other transportation infrastructure that will help facilitate orderly growth and development and access to areas within Bernalillo County and Sandoval County planned for development. In the longer term, the proposed transportation corridor will also provide a safe and efficient outer beltway for the expanding Albuquerque and Rio Rancho metropolitan area. Alternatives under consideration include: (1) Taking no action; and, (2) various centerline alignment alternatives.

Letters describing the proposed action and requesting comments will be sent to appropriate federal, state, and local agencies, and to private organizations and individuals who have previously expressed, or are known to have an interest, in the proposed action. A scoping meeting(s) will be scheduled in early February 2009. Agencies and other potential stakeholders having a likely interest in the proposed project will be informed of the scoping meeting by letter and by notices published in local and regional newspapers.

A notice of intent to prepare a tiered EIS will be published in local newspapers in January 2008. The local notice will describe the proposed action and the intent of FHWA, NMDOT, and Sandoval County to prepare an environmental impact statement. It will also request comments from the public on issues of interest and concern and on alternatives to be considered.

To ensure that the full range of issues related to the proposed action are addressed and all significant issues are identified, comments, suggestions, and questions are invited from all interested parties. Comments, questions, and suggestions about the proposed action and the EIS should be sent to the FHWA at the address provided above.

(Catalog of Federal Domestic Assistance Program Number 20.205, Highway Planning and Construction. The regulations implementing Executive Order 12372 regarding intergovernmental consultation on Federal programs and activities apply to this program.)

Issued on January 12, 2009.

J. Don Martinez,

Division Administrator, Federal Highway Administration, Santa Fe, New Mexico.

[FR Doc. E9–913 Filed 1–15–09; 8:45 am]

BILLING CODE 4910–22–P

DEPARTMENT OF TRANSPORTATION

Federal Motor Carrier Safety Administration

[Docket No. FMCSA–2006–25756]

Commercial Driver's License Standards: Application for Exemption; Volvo Trucks North America (Volvo)

AGENCY: Federal Motor Carrier Safety Administration (FMCSA), DOT.

ACTION: Notice of application for exemption; request for comments.

SUMMARY: FMCSA announces that Volvo Trucks North America (Volvo) has applied for an exemption from the Federal requirement for a driver of commercial motor vehicles (CMVs) to hold a commercial driver's license (CDL). Volvo requests that the exemption cover one Swedish field test engineer who will test-drive CMVs for Volvo within the United States. This Volvo employee holds a valid Swedish CDL. Volvo states the exemption is needed to support a Volvo field test to meet future clean air standards, to test-drive Volvo prototype vehicles to verify results in ''real world'' environments, and to deliver the vehicles if necessary in the United States. Volvo believes the knowledge and skills tests and training program that Swedish drivers undergo to obtain a Swedish CDL ensures the exemption would provide a level of safety that is equivalent to, or greater than, the level of safety obtained by complying with the U.S. requirements for a CDL.

DATES: Comments must be received on or before February 17, 2009.

ADDRESSES: You may submit comments identified by Federal Docket Management System Number FMCSA–2006–25756 by any of the following methods:

- *Federal eRulemaking Portal: http://www.regulations.gov.* Follow the online instructions for submitting comments.
- *Fax:* 1–202–493–2251.
- *Mail:* Docket Management Facility; U.S. Department of Transportation, 1200 New Jersey Avenue, SE., West Building, Ground Floor, Room W12–140, Washington, DC 20590–0001.
- *Hand Delivery or Courier:* West Building, Ground Floor, Room W12–140, 1200 New Jersey Avenue, SE., between 9 a.m. and 5 p.m. E.T., Monday through Friday, except Federal holidays.

Instructions: All submissions must include the Agency name and docket number. For detailed instructions on submitting comments and additional information on the exemption process, see the Public Participation heading below. Note that all comments received will be posted without change to *http://www.regulations.gov,* including any personal information provided. Please see the Privacy Act heading below.

Docket: For access to the docket to read background documents or comments received, go to *http://www.regulations.gov,* and follow the online instructions for accessing the dockets, or go to the street address listed above.

Privacy Act: Anyone is able to search the electronic form of all comments received into any of our dockets by the name of the individual submitting the comment (or signing the comment, if submitted on behalf of an association, business, labor union, etc.). You may review DOT's complete Privacy Act Statement in the **Federal Register** published on April 11, 2000 (65 FR 19476) or you may visit *http://DocketInfo.dot.gov.*

Public Participation: The Federal eRulemaking Portal is available 24 hours each day, 365 days each year, You can get electronic submission and retrieval help and guidelines under the ''help'' section of the Federal eRulemaking Portal Web site. If you want us to notify you that we received your comments, please include a self-addressed, stamped envelope or postcard, or print the acknowledgement page that appears after submitting comments online. Comments received after the comment closing date will be included in the docket, and we will consider late comments to the extent practicable.

FOR FURTHER INFORMATION CONTACT: Mr. Richard Clemente, FMCSA Driver and Carrier Operations Division; Office of Bus and Truck Standards and Operations; Telephone: 202–366–4325. E-mail: *MCPSD@dot.gov.*

SUPPLEMENTARY INFORMATION:

Background

Section 4007 of the Transportation Equity Act for the 21st Century (Pub. L. 105–178, 112 Stat. 107, June 9, 1998) amended 49 U.S.C. 31315 and 31136(e) to provide authority to grant exemptions from motor carrier safety regulations. Under its regulations, FMCSA must publish a notice of each exemption request in the **Federal Register** (49 CFR 381.315(a)). The Agency must provide the public an opportunity to inspect the information relevant to the application, including the conducting of any safety analyses. The Agency must also provide an opportunity for public comment on the application.

The Agency reviews the safety analyses and the public comments, and determines whether granting the exemption would likely achieve a level of safety equivalent to, or greater than, the level that would be achieved by the current regulation (49 CFR 381.305). The decision of the Agency must be published in the **Federal Register** (49 CFR 381.315(b)) with the reason for denying or, in the alternative, the specific person or class of persons receiving the exemption, and the regulatory provision or provisions from which exemption is granted. The notice must also specify the effective period of the exemption (up to 2 years), and explain the terms and conditions of the exemption. The exemption may be renewed (49 CFR 381.300(b)).

Request for Exemption

Volvo has applied for an exemption from the commercial driver's license (CDL) rules, specifically 49 CFR 383.23 that prescribes licensing requirements for drivers operating commercial motor vehicles (CMVs) in interstate or intrastate commerce. Volvo requests the exemption because this driver-employee is a citizen and resident of Sweden, and therefore cannot apply for a CDL in any of the United States. A copy of the application is in Docket No. FMCSA–2006–25756.

The exemption would allow one driver to operate CMVs in interstate commerce as part of a team of drivers who will support a Volvo field test to meet future air quality standards, to test-drive Volvo prototype vehicles at its test site and in the vicinity around Phoenix, Arizona, to verify results in ''real world'' environments, and to deliver the vehicles if necessary in the U.S. The driver is named Michael Tellstrom, and Volvo requests that the exemption cover a two-year period beginning April 2009.

This driver holds a valid Swedish CDL, and as explained by Volvo in previous exemption requests, drivers applying for a Swedish-issued CDL must undergo a training program and pass knowledge and skills tests. Volvo also stated in prior exemption requests that the knowledge and skills tests and training program that Swedish drivers undergo to obtain a Swedish CDL ensure the exemption provides a level of safety that is equivalent to, or greater than, the level of safety obtained by complying with the U.S. requirement for a CDL.

FMCSA has previously determined the process for obtaining a Swedish-issued CDL is comparable to, or as effective as the Federal requirements of Part 383, and adequately assesses the driver's ability to operate CMVs in the U.S. Previously, on several other occasions FMCSA had published notices concerning similar Volvo Requests. An initial notice of a similar nature was published by FMCSA on May 12, 2006, granting this exemption to Volvo for 11 Swedish CDL drivers permitting them to operate CMVs in the U.S. (71 FR 27780).

Request for Comments

In accordance with 49 U.S.C. 31315(b)(4) and 31136(e), FMCSA requests public comment on Volvo's application for an exemption from the CDL requirements of 49 CFR 383.23. The Agency will consider all comments received by close of business on February 17, 2009. Comments will be available for examination in the docket at the location listed under the **ADDRESSES** section of this notice. The Agency will consider to the extent practicable comments received in the public docket after the closing date of the comment period.

Issued on: January 9, 2009.

Larry W. Minor,

Associate Administrator for Policy and Program Development.

[FR Doc. E9–850 Filed 1–15–09; 8:45 am]

BILLING CODE 4910–EX–P

DEPARTMENT OF TRANSPORTATION

Federal Transit Administration

[Docket FTA–2009–0001]

Notice of Establishment of Emergency Relief Docket for Calendar Year 2009

AGENCY: Federal Transit Administration (FTA), DOT.

ACTION: Notice.

SUMMARY: As provided in 49 CFR Part 601, Subpart D, (72 FR 910, Jan. 9, 2007), the Federal Transit Administration (FTA) must, by January 31 of each year, establish an Emergency Relief Docket so grantees and subgrantees affected by national or regional emergencies may request relief from FTA administrative requirements set forth in FTA policy statements, circulars, guidance documents, and regulations. By this notice, FTA is establishing an Emergency Relief Docket for calendar year 2009.

FOR FURTHER INFORMATION CONTACT: Bonnie L. Graves, Attorney-Advisor, Legislation and Regulations Division, Office of Chief Counsel, Federal Transit Administration, 1200 New Jersey Ave., SE., Room E56–303, Washington, DC 20590, phone: (202) 366–4011, fax: (202) 366–3809, or e-mail, *Bonnie.Graves@dot.gov*.

SUPPLEMENTARY INFORMATION: The Administrator in his/her sole discretion shall determine the need for opening the Emergency Relief Docket. It may be opened at the request of a grantee or subgrantee, or on the Administrator's own initiative. When the Emergency Relief Docket is opened, FTA will post a notice on its Web site, at *http://www.fta.dot.gov*. In addition, a notice will be posted in the docket.

In the event a grantee or subgrantee believes the Emergency Relief Docket should be opened and it has not been opened, that grantee or subgrantee may submit a petition in duplicate to the Administrator, via U.S. mail, to: Federal Transit Administration, 1200 New Jersey Ave., SE., Washington, DC 20590; via telephone, at: (202) 366–4043; or via fax, at: (202) 366–3472, requesting opening of the Docket for that emergency and including the information set forth below.

All petitions for relief from administrative requirements must be posted in the docket in order to receive consideration by FTA. The docket is publicly accessible and can be accessed 24 hours a day, seven days a week, via the Internet at *http://www.regulations.gov*. Petitions may also be submitted by U.S. mail or by hand delivery to the DOT Docket Management Facility, 1200 New Jersey Ave., SE., Room W12–140, Washington, DC 20590. Any grantee or subgrantee submitting petitions for relief or comments to the docket must include the agency name (Federal Transit Administration) and docket number FTA–2009–0001. Grantees and subgrantees making submissions to the docket by mail or hand delivery should submit two copies.

In the event a grantee or subgrantee needs to request immediate relief and does not have access to electronic means to request that relief, the grantee or subgrantee may contact any FTA regional office or FTA headquarters and request that FTA staff submit the petition on its behalf.

A petition for relief shall:

(a) Identify the grantee or subgrantee and its geographic location;

(b) Specifically address how an FTA requirement in a policy statement, circular, or agency guidance will limit a grantee's or subgrantee's ability to respond to an emergency or disaster;

(c) Identify the policy statement, circular, guidance document and/or rule from which the grantee or subgrantee seeks relief; and

(d) Specify if the petition for relief is one-time or ongoing, and if ongoing identify the time period for which the relief is requested. The time period may

not exceed three months; however, additional time may be requested through a second petition for relief.

A petition for relief from administrative requirements will be conditionally granted for a period of three (3) business days from the date it is submitted to the Emergency Relief Docket. FTA will review the petition after the expiration of the three business days and review any comments submitted thereto. FTA may contact the grantee or subgrantee that submitted the request for relief, or any party that submits comments to the docket, to obtain more information prior to making a decision. FTA shall then post a decision to the Emergency Relief Docket. FTA's decision will be based on whether the petition meets the criteria for use of these emergency procedures, the substance of the request, and the comments submitted regarding the petition. If FTA does not respond to the request for relief to the docket within three business days, the grantee or subgrantee may assume its petition is granted for a period not to exceed three months until and unless FTA states otherwise.

Pursuant to section 604.2(f) of FTA's charter rule (73 FR 2325, Jan. 14, 2008), grantees and subgrantees may assist with evacuations or other movement of people that might otherwise be considered charter transportation when that transportation is in response to an emergency declared by the President, governor, or mayor, or in an emergency requiring immediate action prior to a formal declaration, even if a formal declaration of an emergency is not eventually made by the President, governor or mayor. Therefore, a request for relief is not necessary in order to provide this service. However, if the emergency lasts more than 45 calendar days, the grantee or subgrantee shall follow the procedures set out in this notice.

FTA reserves the right to reopen any docket and reconsider any decision made pursuant to these emergency procedures based upon its own initiative, based upon information or comments received subsequent to the three business day comment period, or at the request of a grantee or subgrantee upon denial of a request for relief. FTA shall notify the grantee or subgrantee if it plans to reconsider a decision. FTA decision letters, either granting or denying a petition, shall be posted in the Emergency Relief Docket and shall reference the document number of the petition to which it relates.

Issued in Washington, DC, this 9th day of January, 2009.

Severn E.S. Miller,

FTA Chief Counsel.

[FR Doc. E9–858 Filed 1–15–09; 8:45 am]

BILLING CODE 4910–57–P

DEPARTMENT OF TRANSPORTATION

Maritime Administration

[USCG–2007–28535]

Atlantic Sea Island Group LLC, Safe Harbor Energy Liquefied Natural Gas Deepwater Port License Application

AGENCY: Maritime Administration, DOT.

ACTION: Notice of public meeting; change in location.

SUMMARY: On January 9, 2009, the Maritime Administration published a notice of intent for the Atlantic Sea Island Group LLC, Safe Harbor Energy Liquefied Natural Gas Deepwater Port, with request for comments in the **Federal Register**, which included locations and times of open houses and public meetings. Subsequent events have required a change in the location of the open house and public meeting to be held on January 29, 2009. This notice provides the information on the new location.

Change: The **Federal Register** published on January 9, 2009 (Volume 74, Number 6, pages 982–984) indicated that the open house and public meeting on January 29, 2009 would be held at the Jackson by the Beach Hotel in Long Beach, New York. The location has been changed and the open house and public meeting on January 29, 2009 will be held at: Long Beach Public Library, 111 West Park Avenue, Long Beach, NY 11561; 516–432–7200. The date, location, and time for the public meeting and open house in Eatontown, New Jersey remains as originally announced.

DATES: Public meetings will be held in Eatontown, New Jersey on January 27, 2009; and in Long Beach, New York on January 29, 2009. The public meetings will be held from 6 p.m. to 8 p.m. and will be preceded by an open house from 4:30 p.m. to 6 p.m. The public meetings may end later than the stated time, depending on the number of persons wishing to speak.

ADDRESSES: The open house and public meeting on January 27, 2009 will be held at: The Sheraton of Eatontown, 6 Industrial Way East, Eatontown, NJ 07724; 732–542–6500.

The open house and public meeting on January 29, 2009 will be held at: Long Beach Public Library, 111 West Park Avenue, Long Beach, NY 11561; 516–432–7200.

FOR FURTHER INFORMATION CONTACT: Mark Prescott, U.S. Coast Guard, telephone: 202–372–1440, e-mail: *Mark.A.Prescott@uscg.mil;* or LT Hannah Kawamoto, U.S. Coast Guard, telephone: 202–372–1438, e-mail: *Hannah.K.Kawamoto@uscg.mil;* or Yvette Fields, U.S. Maritime Administration, telephone: 202–366–0926, e-mail: *Yvette.Fields@dot.gov.* If you have questions on viewing the docket, call Renee V. Wright, Program Manager, Docket Operations, telephone 202–493–0402.

By order of the Maritime Administrator.

Dated: January 14, 2009.

Christine S. Gurland,

Acting Secretary, Maritime Administration.

[FR Doc. E9–1077 Filed 1–15–09; 8:45 am]

BILLING CODE 4910–81–P

DEPARTMENT OF TRANSPORTATION

National Highway Traffic Safety Administration

Petition for Exemption From the Federal Motor Vehicle Motor Theft Prevention Standard; General Motors Corporation

AGENCY: National Highway Traffic Safety Administration, Department of Transportation (DOT).

ACTION: Grant of petition for exemption.

SUMMARY: This document grants in full the petition of General Motors Corporation (GM), for an exemption in accordance with § 543.9(c)(2) of 49 CFR Part 543, *Exemption from the Vehicle Theft Prevention Standard,* for the GMC small crossover vehicle line beginning with model year (MY) 2010. This petition is granted because the agency has determined that the antitheft device to be placed on the line as standard equipment is likely to be as effective in reducing and deterring motor vehicle theft as compliance with the parts-marking requirements of the Theft Prevention Standard.

DATES: The exemption granted by this notice is effective beginning with model year (MY) 2010.

FOR FURTHER INFORMATION CONTACT: Ms. Deborah Mazyck, Office of International Policy, Fuel Economy and Consumer Standards, NHTSA, 1200 New Jersey Avenue, SE., Washington, DC 20590. Ms. Mazyck's phone number is (202) 366–0846. Her fax number is (202) 493–2290.

SUPPLEMENTARY INFORMATION: In a petition dated September 25, 2008, GM requested an exemption from the parts-marking requirements of the theft prevention standard (49 CFR part 541) for the GMC small crossover vehicle line beginning with MY 2010. The petition requested an exemption from parts-marking pursuant to 49 CFR 543, *Exemption from the Vehicle Theft Prevention Standard,* based on the installation of an antitheft device as standard equipment for the entire vehicle line.

Under § 543.5(a), a manufacturer may petition NHTSA to grant an exemption for one vehicle line per model year. GM has petitioned the agency to grant an exemption for its small crossover vehicle line beginning with MY 2010. On November 18, 2008, the agency contacted GM by telephone to obtain additional information. GM's submission is considered a complete petition as required by 49 CFR 543.7, in that it meets the general requirements contained in § 543.5 and the specific content requirements of § 543.6.

GM's petition provided a detailed description and diagram of the identity, design, and location of the components of the antitheft device for the new vehicle line. GM will install its passive, transponder-based, electronic immobilizer device (PASS-Key III+) as standard equipment on its GMC small crossover vehicle line beginning with MY 2010. GM stated that the device will provide protection against unauthorized use (i.e., starting and engine fueling), but will not provide any visible or audible indication of unauthorized vehicle entry (i.e., flashing lights or horn alarm).

The PASS-Key III+ device is designed to be active at all times without direct intervention by the vehicle operator. The system is fully armed immediately after the ignition has been turned off and the key removed. Components of the antitheft device include an electronically-coded ignition key, a PASS-Key III+ controller module and an engine control module. The ignition key contains electronics molded into the key head, providing billions of possible electronic combinations. The electronics receive energy and data from the antenna module. Upon receipt of the data, the key will calculate a response to the data using secret information and an internal encryption algorithm, and transmit the response back to the vehicle. The antenna module translates the radio frequency signal received from the key into a digital signal and compares the received response to an internally calculated value. If the values match, the key is recognized as valid and one of 65,534 ''Vehicle Security Passwords'' is transmitted to the engine control module to enable fueling and starting of the vehicle. If an invalid key code is received, the PASS-Key III+ controller module will send a ''Disable Password'' to the engine control module and starting, ignition, and fuel will be inhibited.

GM indicated that the theft rates, as reported by the Federal Bureau of Investigation's National Crime Information Center (NCIC), are lower for exempted GM models equipped with the ''PASS-Key''-like systems than the theft rates for earlier, similarly constructed models which were parts-marked. Based on the performance of the PASS-Key, PASS-Key II, and PASS-Key III systems on other GM models, and the advanced technology utilized by the modification, GM believes that the PASS-Key III+ antitheft device will be more effective in deterring theft than the parts-marking requirements of 49 CFR Part 541.

In addressing the specific content requirements of 543.6, GM provided information on the reliability and durability of the proposed device. To ensure reliability and durability of the device, GM conducted tests based on its own specified standards. GM provided its own test information on the reliability and durability of its device, and believes that the device is reliable and durable since it complied with the specified requirements for each test. GM stated that the PASS-Key III+ system has been designed to enhance the functionality and theft protection provided by GM's first, second and third generation PASS-Key, PASS-Key II, and PASS-Key III systems. GM also stated that since the authorization code is not handled or contacted by the vehicle operator, the reliability of the PASS-Key III+ is significantly improved over the PASS-Key and PASS-Key II devices. According to GM, this reliability allows the system to return to the ''Go/No Go'' based system, eliminating the ''fail enabled'' mode of operation.

GM compared the device proposed for its small crossover vehicle line with other devices which NHTSA has determined to be as effective in reducing and deterring motor vehicle theft as would compliance with the parts-marking requirements. GM stated that the theft rates for the 2003 and 2004 Cadillac CTS and the MY 2004 Cadillac SRX currently installed with the PASS-Key III+ antitheft device exhibit theft rates that are lower than the median theft rate (3.5826) established by the agency. The Cadillac CTS introduced as a MY 2003 vehicle line has been equipped with the PASS-Key III+ device since the start of production. The theft rates for the MY 2003 and 2004 Cadillac CTS are 1.0108 and 0.7681 respectively. Similarly, the Cadillac SRX, introduced as a MY 2004 vehicle, has been equipped with the PASS-Key III+ device since production. The theft rate for MY 2004 Cadillac SRX is 0.7789. GM stated that the theft rates experienced by these lines with installation of the PASS-Key III+ device demonstrate the effectiveness of the device. GM also stated that its crossover vehicle is a corporate twin to the Chevrolet Equinox which is equipped with the PASS-Key III+ device and already exempt from the parts-marking requirements. The average theft rate for the Chevrolet Equinox using two model years' data is 1.2073. The agency agrees that the device is substantially similar to devices for which the agency has previously approved exemptions.

Based on comparison of the reduction in the theft rates of GM vehicles using a passive theft deterrent device with an audible/visible alarm system to the reduction in theft rates for GM vehicle models equipped with a passive antitheft device without an alarm, GM finds that the lack of an alarm or attention attracting device does not compromise the theft deterrent performance of a system such as PASS-Key III+.

GM's proposed device lacks an audible or visible alarm. Therefore, this device cannot perform one of the functions listed in 49 CFR part 543.6(a)(3), that is, to call attention to unauthorized attempts to enter or move the vehicle. However, theft data have indicated a decline in theft rates for vehicle lines equipped with comparable devices that have received full exemptions from the parts-marking requirements. In these instances, the agency has concluded that the lack of a audible or visible alarm has not prevented these antitheft devices from being effective protection against theft.

Based on the evidence submitted by GM, the agency believes that the antitheft device for the GM small crossover vehicle line is likely to be as effective in reducing and deterring motor vehicle theft as compliance with the parts-marking requirements of the Theft Prevention Standard (49 CFR 541).

The agency concludes that the device will provide four of the five types of performance listed in § 543.6(a)(3): promoting activation; preventing defeat or circumvention of the device by unauthorized persons; preventing operation of the vehicle by unauthorized entrants; and ensuring the reliability and durability of the device.

Pursuant to 49 U.S.C. 33106 and 49 CFR 543.7 (b), the agency grants a petition for exemption from the parts-marking requirements of part 541, either in whole or in part, if it determines that, based upon substantial evidence, the standard equipment antitheft device is likely to be as effective in reducing and deterring motor vehicle theft as compliance with the parts-marking requirements of part 541. The agency finds that GM has provided adequate reasons for its belief that the antitheft device for the GMC small crossover vehicle line is likely to be as effective in reducing and deterring motor vehicle theft as compliance with the parts-marking requirements of the Theft Prevention Standard (49 CFR part 541). This conclusion is based on the information GM provided about its device.

For the foregoing reasons, the agency hereby grants in full GM's petition for exemption for the GMC small crossover vehicle line from the parts-marking requirements of 49 CFR part 541. The agency notes that 49 CFR part 541, Appendix A–1, identifies those lines that are exempted from the Theft Prevention Standard for a given model year. 49 CFR part 543.7(f) contains publication requirements incident to the disposition of all part 543 petitions. Advanced listing, including the release of future product nameplates, the beginning model year for which the petition is granted and a general description of the antitheft device is necessary in order to notify law enforcement agencies of new vehicle lines exempted from the parts marking requirements of the Theft Prevention Standard.

If GM decides not to use the exemption for this line, it should formally notify the agency. If such a decision is made, the line must be fully marked according to the requirements under 49 CFR Parts 541.5 and 541.6 (marking of major component parts and replacement parts).

NHTSA notes that if GM wishes in the future to modify the device on which this exemption is based, the company may have to submit a petition to modify the exemption. Part 543.7(d) states that a part 543 exemption applies only to vehicles that belong to a line exempted under this part and equipped with the antitheft device on which the line's exemption is based. Further, part 543.9(c)(2) provides for the submission of petitions ''to modify an exemption to permit the use of an antitheft device similar to but differing from the one specified in that exemption.''

The agency wishes to minimize the administrative burden that part 543.9(c)(2) could place on exempted vehicle manufacturers and itself. The agency did not intend in drafting part 543 to require the submission of a modification petition for every change to the components or design of an antitheft device. The significance of many such changes could be *de minimis*. Therefore, NHTSA suggests that if the manufacturer contemplates making any changes, the effects of which might be characterized as *de minimis*, it should consult the agency before preparing and submitting a petition to modify.

Authority: 49 U.S.C. 33106; delegation of authority at 49 CFR 1.50.

Issued on: January 12, 2009.

Stephen R. Kratzke,

Associate Administrator for Rulemaking.

[FR Doc. E9–947 Filed 1–15–09; 8:45 am]

BILLING CODE 4910–59–P

DEPARTMENT OF TRANSPORTATION

National Highway Traffic Safety Administration

[U.S. DOT Docket Number NHTSA–2008–0215]

Reports, Forms, and Recordkeeping Requirements

AGENCY: National Highway Traffic Safety Administration (NHTSA), Department of Transportation.

ACTION: Request for public comment on proposed collection of information.

SUMMARY: Before a Federal agency can collect certain information from the public, it must receive approval from the Office of Management and Budget (OMB). Under procedures established by the Paperwork Reduction Act of 1995, before seeking OMB approval, Federal agencies must solicit public comment on proposed collections of information, including extensions and reinstatement of previously approved collections.

This document describes one collection of information for which NHTSA intends to seek OMB approval.

DATES: Comments must be received on or before March 17, 2009.

ADDRESSES: Comments must refer to the docket notice numbers cited at the beginning of this notice and be submitted to Docket Management, Room W12–140, Ground level, 1200 New Jersey Ave., SE., Washington, DC 20590 by any of the following methods.

- *Federal eRulemaking Portal: http://www.regulations.gov.* Follow the instructions for submitting comments.
- *Mail:* Docket Management Facility; U.S. Department of Transportation, 1200 New Jersey Avenue, SE., West Building Ground Floor, Room W12–140, Washington, DC 20590.
- *Hand Delivery/Courier:* 1200 New Jersey Avenue, SE., West Building Ground Floor, Room W12–140, Washington, DC 20590, between 9 am and 5 pm, Monday through Friday, except Federal Holidays. Telephone: 1–800–647–5527.
- *Fax:* (202) 493–2251.

Instructions: For detailed instructions on submitting comments and additional information on the rulemaking process, see the Public Participation heading of the **SUPPLEMENTARY INFORMATION** section of this document. Note that all comments received will be posted without change to *http://www.regulations.gov,* including any personal information provided. Please see the Privacy Act heading below.

Privacy Act: Anyone is able to search the electronic form of all comments received into any of our dockets by the name of the individual submitting the comment (or signing the comment, if submitted on behalf of an association, business, labor union, etc.). You may review DOT's complete Privacy Act Statement in the **Federal Register** published on April 11, 2000 (65FR 19477–78) or you may visit *http://Docket Info.dot.gov.*

Docket: For access to the docket to read background documents or comments received, go to the street address listed above. The internet access to the docket will be at *http://www.regulations.gov.* Follow the online instructions for accessing the dockets.

FOR FURTHER INFORMATION CONTACT: Complete copies of each request for collection of information may be obtained at no charge from Rosalind Proctor, NHTSA 1200 New Jersey Ave., SE., West Building, Room W43–302, NVS–131, Washington, DC 20590. Ms. Proctor's telephone number is (202) 366–0846. Please identify the relevant collection of information by referring to its OMB Control Number.

SUPPLEMENTARY INFORMATION: Under the Paperwork Reduction Act of 1995, before an agency submits a proposed collection of information to OMB for approval, it must first publish a document in the **Federal Register** providing a 60-day comment period and otherwise consult with members of the public and affected agencies concerning each proposed collection of information. The OMB has promulgated regulations describing what must be included in such a document. Under OMB's regulation (at 5 CFR 1320.8(d)), an

agency must ask for public comment on the following:

(i) Whether the proposed collection of information is necessary for the proper performance of the functions of the agency, including whether the information will have practical utility;

(ii) The accuracy of the agency's estimate of the burden of the proposed collection of information, including the validity of the methodology and assumptions used;

(iii) How to enhance the quality, utility, and clarity of the information to be collected;

(iv) How to minimize the burden of the collection of information on those who are to respond, including the use of appropriate automated, electronic, mechanical, or other technological collection techniques or other forms of information technology, e.g. permitting electronic submission of responses.

In compliance with these requirements, NHTSA asks for public comments on the following proposed collection of information for which the agency is seeking approval from OMB:

Title: 49 CFR 575—Consumer Information Regulations (sections 103 and 105).

OMB Control Number: 2127–0049.

Form Number: None.

Affected Public: Motor vehicle manufacturers of light trucks and utility vehicles.

Requested Expiration Date of Approval: Three years from approval date.

Abstract: NHTSA must ensure that motor vehicle manufacturers comply with 49 CFR Part 575, Consumer Information Regulation part 575.103 Truck-camper loading and Part 575.105 Utility Vehicles. Part 575.103, requires that manufacturers of light trucks that are capable of accommodating slide-in campers provide information on the cargo weight rating and the longitudinal limits within which the center of gravity for the cargo weight rating should be located. Part 575.105, requires that manufacturers of utility vehicles affix a sticker in a prominent location alerting drivers that the particular handling and maneuvering characteristics of utility vehicles require special driving practices when these vehicles are operated.

Estimated Annual Burden: 300 hours.

Number of Respondents: 15.

Based on prior years' manufacturer submissions, the agency estimates that 15 responses will be submitted annually. Currently 12 light truck manufacturers comply with 49 CFR part 575. These manufacturers file one response annually and submit an additional response when they introduce a new model. Changes are rarely filed with the agency, but we estimate that three manufacturers will alter their information because of model changes. The light truck manufacturers gather only pre-existing data for the purposes of this regulation. Based on previous years' manufacturer information, the agency estimates that light truck manufacturers use a total of 20 hours to gather and arrange the data in its proper format (9 hours), to distribute the information to its dealerships and attach labels to light trucks that are capable of accomodating slide-in campers (4 hours), and to print the labels and utility vehicle information in the owner's manual or a separate document included with the owner's manual (7 hours). The estimated annual burden hour is 300 hours. This number reflects the total responses (15) times the total hours (20). Prior years' manufacturer information indicates that it takes an average of $35.00 per hour for professional and clerical staff to gather data, distribute and print material. Therefore, the agency estimates that the cost associated with the burden hours is $10,500 ($35.00 per hour × 300 burden hours).

Comments are invited on: whether the proposed collection of information is necessary for the proper performance of the functions of the Department, including whether the information will have practical utility; the accuracy of the Department's estimate of the burden of the proposed information collection; ways to enhance the quality, utility and clarity of the information to be collected; and ways to minimize the burden of the collection of information on respondents, including the use of automated collection techniques or other forms of information technology.

Issued on: January 12, 2009.

Stephen R. Kratzke,

Associate Administrator for Rulemaking.

[FR Doc. E9–946 Filed 1–15–09; 8:45 am]

BILLING CODE 4910–59–P

DEPARTMENT OF TRANSPORTATION

Surface Transportation Board

[STB Finance Docket No. 35210]

Nicholas B. Temple, Eric Temple, Columbia Basin Railroad Company, Inc, Central Washington Railroad Company and Portland Vancouver Junction Railroad, LLC—Corporate Family Transaction Exemption

Pursuant to an assignment and assumption agreement, Nicholas B. Temple and Eric Temple (collectively, the Temples), Columbia Basin Railroad Company, Inc. (CBRW), Central Washington Railroad Company (CWA), and Portland Vancouver Junction Railroad, LLC (PVJR) have filed a verified notice of exemption for a transaction within a corporate family. The Temples are noncarrier individuals. CBRW and CWA are Class III rail carriers. PVJR is a newly formed, wholly owned subsidiary of CBRW.

In *Columbia Basin Railroad Company, Inc.—Lease and Operation Exemption—Clark County, WA,* STB Finance Docket No. 34472 (STB served Mar.11, 2004), CBRW was authorized to acquire by lease and to operate 14 miles of rail line owned by Clark County, WA, extending between milepost 0.0 at Vancouver Junction, WA, and milepost 14.1 at Battle Ground, WA. In *Columbia Basin Railroad Company, Inc.—Lease and Operation Exemption—Clark County, WA,* STB Finance Docket No. 34661 (STB served Mar. 3, 2005), CBRW was also authorized to acquire by lease and to operate an additional 19 miles of rail line owned by Clark County, WA, extending between milepost 14.1 at Battle Ground, WA, and milepost 33.1 at or near Chelatchie, WA. In *Central Washington Railroad Company-Lease and Operation Exemption—The Burlington Northern and Santa Fe Railway Company,* STB Finance Docket No. 34640 (STB served Jan. 21, 2005), CWA was authorized to lease from The Burlington Northern and Santa Fe Railway Company (BNSF) and to operate 41.57 miles of rail line extending between specified points in the State of Washington. CWA was also assigned certain trackage rights by BNSF as part of that transaction. The Temples control both CBRW and CWA. *See Nicholas B. Temple and Eric Temple—Control Exemption—Central Washington Railroad Company,* STB Finance Docket No. 34641 (STB served Jan. 21, 2005).

As part of a corporate restructuring, CBRW will assign all of its interests in the 33-mile Clark County line to PVJR. Applicants state that, upon completion of the transaction, PVJR will assume the common carrier obligation regarding the Clark County line.

The transaction is expected to be consummated on or after January 30, 2009 (30 days after the exemption was filed).

Applicants state that the intra-corporate restructuring will reflect that the Clark County line is geographically and operationally distinct from the remainder of CBRW's rail system and that it will insulate each of CBRW and PVJR from the financial, legal and operational risks of the other.

This is a transaction within a corporate family of the type exempted from prior review and approval under 49 CFR 1180.2(d)(3). The parties state that the transaction will not result in adverse changes in service levels, significant operational changes, or changes in the competitive balance with carriers outside the corporate family.

Under 49 U.S.C. 10502(g), the Board may not use its exemption authority to relieve a rail carrier of its statutory obligation to protect the interests of its employees. Section 11326(c), however, does not provide for labor protection for transactions under sections 11324 and 11325 that involve only Class III rail carriers. Accordingly, the Board may not impose labor protective conditions here, because all of the carriers involved are Class III carriers.

If the notice contains false or misleading information, the exemption is void *ab initio.* Petitions to revoke the exemption under 49 U.S.C. 10502(d) may be filed at any time. The filing of a petition to revoke will not automatically stay the transaction. Petitions for stay must be filed no later than January 23, 2009 (at least 7 days before the effective date of the exemption).

An original and 10 copies of all pleadings, referring to STB Finance Docket No. 35210, must be filed with the Surface Transportation Board, 395 E Street, SW., Washington, DC 20423–0001. In addition, one copy of each pleading must be served on applicants' representative, Rose-Michele Nardi, Weiner Brodsky Sidman Kider PC, 1300 19th Street, NW., Fifth Floor, Washington, DC 20036–1609.

Board decisions and notices are available on our Web site at *http://www.stb.dot.gov.*

Decided: January 9, 2009.

By the Board, David M. Konschnik, Director, Office of Proceedings.

Jeffrey Herzig,

Clearance Clerk.

[FR Doc. E9–836 Filed 1–15–09; 8:45 am]

BILLING CODE 4915–01–P

DEPARTMENT OF THE TREASURY

United States Mint

Notification of Citizens Coinage Advisory Committee January 2009 Public Meeting

ACTION: Notification of Citizens Coinage Advisory Committee January 2009 Public Meeting.

SUMMARY: Pursuant to United States Code, Title 31, section 5135(b)(8)(C), the United States Mint announces the Citizens Coinage Advisory Committee (CCAC) public meeting scheduled for January 27, 2009.

Date: January 27, 2009.

Time: 10:30 a.m. to 12 p.m.

Location: United States Mint, 801 9th Street, NW., Washington, DC 20220.

Subject: Review candidate reverse designs for the obverses of the 2010 Presidential $1 Coins.

Interested persons should call 202–354–7502 for the latest update on meeting time and room location.

In accordance with 31 U.S.C. 5135, the CCAC:

- Advises the Secretary of the Treasury on any theme or design proposals relating to circulating coinage, bullion coinage, Congressional Gold Medals, and national and other medals.
- Advises the Secretary of the Treasury with regard to the events, persons, or places to be commemorated by the issuance of commemorative coins in each of the five calendar years succeeding the year in which a commemorative coin designation is made.
- Makes recommendations with respect to the mintage level for any commemorative coin recommended.

FOR FURTHER INFORMATION CONTACT: Cliff Northup, United States Mint Liaison to the CCAC; 801 9th Street, NW., Washington, DC 20220; or call 202–354–7200.

Any member of the public interested in submitting matters for the CCAC's consideration is invited to submit them by fax to the following number: 202–756–6830.

Authority: 31 U.S.C. 5135(b)(8)(C).

Dated: January 12, 2009.

Edmund C. Moy,

Director, United States Mint.

[FR Doc. E9–906 Filed 1–15–09; 8:45 am]

BILLING CODE 4810–37–P

DEPARTMENT OF VETERANS AFFAIRS

Advisory Committee on Disability Compensation; Notice of Meeting

The Department of Veterans Affairs gives notice under Public Law 92–463 (Federal Advisory Committee Act) that the Advisory Committee on Disability Compensation will meet on February 2–3, 2009, in the Carlton Room, at the St. Regis Washington, DC, 923 16th and K Streets, NW., from 8:30 a.m. to 5:30 p.m. The meeting is open to the public.

The purpose of the Committee is to advise the Secretary of Veterans Affairs on establishing and supervising a schedule to conduct periodic reviews of the VA Schedule for Rating Disabilities.

The Committee will receive briefings about studies on compensation for veterans with service-connected disabilities and other veteran benefits programs. The Committee will break into subcommittees on the afternoon of February 2 and the morning of February 3 to begin working on recommendations. An open forum for verbal statements from the public will be available in the afternoon on February 3. People wishing to make oral statements before the Committee will be accommodated on a first-come, first-served basis and will be provided three minutes per statement.

Interested persons may submit written statements to the Committee before the meeting, or within 10 days after the meeting, by sending them to Ms. Ersie Farber, Designated Federal Officer, Department of Veterans Affairs, Veterans Benefits Administration (211A), 810 Vermont Avenue, NW., Washington, DC 20420. Any member of the public wishing to attend the meeting should contact Ms. Farber at (202) 461–9728.

Dated: January 12, 2009.

By Direction of the Secretary.

E. Philip Riggin,

Committee Management Officer.

[FR Doc. E9–977 Filed 1–15–09; 8:45 am]

BILLING CODE 8320–01–P

Federal Register

Friday,
January 16, 2009

Part II

Securities and Exchange Commission

17 CFR Parts 230 and 240
Indexed Annuities and Certain Other Insurance Contracts; Final Rule

SECURITIES AND EXCHANGE COMMISSION

17 CFR Parts 230 and 240

[Release Nos. 33–8996, 34–59221; File No. S7–14–08]

RIN 3235–AK16

Indexed Annuities And Certain Other Insurance Contracts

AGENCY: Securities and Exchange Commission.

ACTION: Final rule.

SUMMARY: We are adopting a new rule that defines the terms ''annuity contract'' and ''optional annuity contract'' under the Securities Act of 1933. The rule is intended to clarify the status under the federal securities laws of indexed annuities, under which payments to the purchaser are dependent on the performance of a securities index. The rule applies on a prospective basis to contracts issued on or after the effective date of the rule. We are also adopting a new rule that exempts insurance companies from filing reports under the Securities Exchange Act of 1934 with respect to indexed annuities and other securities that are registered under the Securities Act, provided that certain conditions are satisfied, including that the securities are regulated under state insurance law, the issuing insurance company and its financial condition are subject to supervision and examination by a state insurance regulator, and the securities are not publicly traded.

DATES: *Effective Date:* The effective date of § 230.151A is January 12, 2011. The effective date of § 240.12h–7 is May 1, 2009. Sections III.A.3. and III.B.3. of this release discuss the effective dates applicable to rule 151A and rule 12h–7, respectively.

FOR FURTHER INFORMATION CONTACT: Michael L. Kosoff, Attorney, or Keith E. Carpenter, Senior Special Counsel, Office of Disclosure and Insurance Product Regulation, Division of Investment Management, at (202) 551–6795, Securities and Exchange Commission, 100 F Street, NE., Washington, DC 20549–5720.

SUPPLEMENTARY INFORMATION: The Securities and Exchange Commission (''Commission'') is adding rule 151A under the Securities Act of 1933 (''Securities Act'')[1] and rule 12h–7 under the Securities Exchange Act of 1934 (''Exchange Act'').[2]

[1] 15 U.S.C. 77a *et seq.*

[2] 15 U.S.C. 78a *et seq.*

Table of Contents

I. Executive Summary
II. Background
A. Description of Indexed Annuities
B. Section 3(a)(8) Exemption
III. Discussion of the Amendments
A. Definition of Annuity Contract
1. Analysis
2. Commenters' Concerns Regarding Commission's Analysis
3. Definition
B. Exchange Act Exemption for Securities that are Regulated as Insurance
1. The Exemption
2. Conditions to Exemption
3. Effective Date
IV. Paperwork Reduction Act
V. Cost-Benefit Analysis
VI. Consideration of Promotion of Efficiency, Competition, and Capital Formation; Consideration of Burden on Competition
VII. Final Regulatory Flexibility Analysis
VIII. Statutory Authority
Text of Rules

I. Executive Summary

We are adopting new rule 151A under the Securities Act of 1933 in order to clarify the status under the federal securities laws of indexed annuities, under which payments to the purchaser are dependent on the performance of a securities index.[3] Section 3(a)(8) of the Securities Act provides an exemption under the Securities Act for certain ''annuity contracts,'' ''optional annuity contracts,'' and other insurance contracts. The new rule prospectively defines certain indexed annuities as not being ''annuity contracts'' or ''optional annuity contracts'' under this exemption if the amounts payable by the insurer under the contract are more likely than not to exceed the amounts guaranteed under the contract.

The definition hinges upon a familiar concept: the allocation of risk. Insurance provides protection against risk, and the courts have held that the allocation of investment risk is a significant factor in distinguishing a security from a contract of insurance. The Commission has also recognized that the allocation of investment risk is significant in determining whether a particular contract that is regulated as insurance under state law is insurance for purposes of the federal securities laws.

Individuals who purchase indexed annuities are exposed to a significant investment risk—*i.e.*, the volatility of the underlying securities index. Insurance companies have successfully utilized this investment feature, which appeals to purchasers not on the usual insurance basis of stability and security, but on the prospect of investment growth. Indexed annuities are attractive to purchasers because they offer the promise of market-related gains. Thus, purchasers obtain indexed annuity contracts for many of the same reasons that individuals purchase mutual funds and variable annuities, and open brokerage accounts.

When the amounts payable by an insurer under an indexed annuity are more likely than not to exceed the amounts guaranteed under the contract, this indicates that the majority of the investment risk for the fluctuating, securities-linked portion of the return is borne by the individual purchaser, not the insurer. The individual underwrites the effect of the underlying index's performance on his or her contract investment and assumes the majority of the investment risk for the securities-linked returns under the contract.

The federal interest in providing investors with disclosure, antifraud, and sales practice protections arises when individuals are offered indexed annuities that expose them to investment risk. Individuals who purchase such indexed annuities assume many of the same risks and rewards that investors assume when investing their money in mutual funds, variable annuities, and other securities. However, a fundamental difference between these securities and indexed annuities is that—with few exceptions—indexed annuities historically have not been registered as securities. As a result, most purchasers of indexed annuities have not received the benefits of federally mandated disclosure, antifraud, and sales practice protections.

In a traditional fixed annuity, the insurer bears the investment risk under the contract. As a result, such instruments have consistently been treated as insurance contracts under the federal securities laws. At the opposite end of the spectrum, the purchaser bears the investment risk for a traditional variable annuity that passes through to the purchaser the performance of underlying securities, and we have determined and the courts have held that variable annuities are securities under the federal securities laws. Indexed annuities, on the other hand, fall somewhere in between—they possess both securities and insurance features. Therefore, we have determined that providing greater clarity with regard to the status of indexed annuities under the federal securities laws will enhance investor protection, as well as provide greater certainty to the issuers and sellers of these products with respect to their obligations under the federal securities laws. Accordingly, we

[3] 17 CFR 230.151A. Rule 151A was proposed by the Commission in June 2008. *See* Securities Act Release No. 8933 (June 25, 2008) [73 FR 37752 (July 1, 2008)] (''Proposing Release'').

are adopting a new definition of ''annuity contract'' that, on a prospective basis, will define a class of indexed annuities that are outside the scope of Section 3(a)(8). We carefully considered where to draw the line, and we believe that the line that we have drawn, which will be applied on a prospective basis only, is rational and reasonably related to fundamental concepts of risk and insurance. That is, if more often than not the purchaser of an indexed annuity will receive a guaranteed return like that of a traditional fixed annuity, then the instrument will be treated as insurance; on the other hand, if more often than not the purchaser will receive a return based on the value of a security, then the instrument will be treated as a security. With respect to the latter group of indexed annuities, investors will be entitled to all the protections of the federal securities laws, including full and fair disclosure and antifraud and sales practice protections.

We are aware that many insurance companies and sellers of indexed annuities, in the absence of definitive interpretation or definition by the Commission, have of necessity acted in reliance on their own analysis of the legal status of indexed annuities based on the state of the law prior to the proposal and adoption of rule 151A. Under these circumstances, we do not believe that insurance companies and sellers of indexed annuities should be subject to any additional legal risk relating to their past offers and sales of indexed annuities as a result of the proposal and adoption of rule 151A. Therefore, the new definition will apply prospectively only—that is, only to indexed annuities that are issued on or after the effective date of our final rule.

Finally, we are adopting rule 12h–7 under the Exchange Act, a new exemption from Exchange Act reporting that will apply to insurance companies with respect to indexed annuities and certain other securities that are registered under the Securities Act and regulated as insurance under state law. We believe that this exemption is necessary or appropriate in the public interest and consistent with the protection of investors. Where an insurer's financial condition and ability to meet its contractual obligations are subject to oversight under state law, and where there is no trading interest in an insurance contract, the concerns that periodic and current financial disclosures are intended to address are generally not implicated.

The Commission received approximately 4,800 comments on the proposed rules. The commenters were divided with respect to proposed rule 151A. Many issuers and sellers of indexed annuities opposed the proposed rule. However, other commenters supported the proposed rule, including the North American Securities Administrators Association, Inc. (''NASAA''),[4] the Financial Industry Regulatory Authority, Inc. (''FINRA''),[5] several insurance companies, and the Investment Company Institute (''ICI'').[6] A number of commenters, both those who supported and those who opposed rule 151A, suggested modifications to the proposed rule. Sixteen commenters addressed proposed rule 12h–7, and all of these commenters supported the proposal, with some suggesting modifications. We are adopting proposed rules 151A and 12h–7, with significant modifications to address the concerns of commenters.

II. Background

Beginning in the mid-1990s, the life insurance industry introduced a new type of annuity, referred to as an ''equity-indexed annuity,'' or, more recently, ''fixed indexed annuity'' (herein ''indexed annuity''). Amounts paid by the insurer to the purchaser of an indexed annuity are based, in part, on the performance of an equity index or another securities index, such as a bond index.

The status of indexed annuities under the federal securities laws has been uncertain since their introduction in the mid-1990s.[7] Under existing precedents, the status of each indexed annuity is determined based on a facts and circumstances analysis of factors that have been articulated by the U.S. Supreme Court.[8] Insurers have typically marketed and sold indexed annuities without registering the contracts under the federal securities laws.

In the years after indexed annuities were first introduced, sales volumes and the number of purchasers were relatively small. Sales of indexed annuities for 1998 totaled $4 billion and grew each year through 2005, when sales totaled $27.2 billion.[9] Indexed annuity sales for 2006 totaled $25.4 billion and $24.8 billion in 2007.[10] In 2007, indexed annuity assets totaled $123 billion, 58 companies were issuing indexed annuities, and there were a total of 322 indexed annuity contracts offered.[11] As sales have grown in more recent years, these products have affected larger and larger numbers of purchasers. They have also become an increasingly important business line for some insurers.[12]

The growth in sales of indexed annuities has, unfortunately, been accompanied by complaints of abusive sales practices. These include claims that the often-complex features of these annuities have not been adequately disclosed to purchasers, as well as claims that rapid sales growth has been fueled by the payment of outsize commissions that are funded by high surrender charges imposed over long periods, which can make these annuities unsuitable for seniors and others who may need ready access to their assets.[13]

[4] NASAA is the association of all state, provincial, and territorial securities regulators in North America.

[5] FINRA is the largest non-governmental regulator for registered broker-dealer firms doing business in the United States. FINRA was created in July 2007 through the consolidation of NASD and the member regulation, enforcement, and arbitration functions of the New York Stock Exchange.

[6] ICI is a national association of investment companies, including mutual funds, closed-end funds, exchange-traded funds, and unit investment trusts.

[7] *See* Securities Act Release No. 7438 (Aug. 20, 1997) [62 FR 45359, 45360 (Aug. 27, 1997)] (''1997 Concept Release''); NASD, *Equity-Indexed Annuities, Notice to Members 05–50* (Aug. 2005), available at: *http://www.finra.org/web/groups/rules_regs/documents/notice_to_members/p014821.pdf* (''NTM 05–50''); Letter of William A. Jacobson, Esq., Associate Clinical Professor, Director, Securities Law Clinic, and Matthew M. Sweeney, Cornell Law School '10, Cornell University Law School (Sept. 10, 2008) (''Cornell Letter''); Letter of FINRA (Aug. 11, 2008) (''FINRA Letter''); Letter of Investment Company Institute (Sept. 10, 2008) (''ICI Letter'').

[8] *SEC v. Variable Annuity Life Ins. Co.*, 359 U.S. 65 (1959) (''*VALIC*''); *SEC* v. *United Benefit Life Ins. Co.*, 387 U.S. 202 (1967) (''*United Benefit*'').

[9] *NAVA, 2008 Annuity Fact Book*, at 57 (2008).

[10] *Id.*

[11] *Id.*

[12] *See, e.g.*, Allianz Life Insurance Company of North America (Best's Company Reports, Allianz Life Ins. Co. of N. Am., Dec. 3, 2007) (Indexed annuities represent approximately two-thirds of gross premiums written.); American Equity Investment Life Holding Company (Annual Report on Form 10–K, at F–16 (Mar. 14, 2008)) (Indexed annuities accounted for approximately 97% of total purchase payments in 2007.); Americo Financial Life and Annuity Insurance Company (Best's Company Reports, Americo Fin. Life and Annuity Ins. Co., Sept. 5, 2008) (Indexed annuities represent over 90% of annuity premiums and almost 60% of annuity reserves.); Aviva USA Group (Best's Company Reports, Aviva Life Insurance Company, July 14, 2008) (Indexed annuity sales represent more than 85% of total annuity production.); Investors Insurance Corporation (IIC) (Best's Company Reports, Investors Ins. Corp., July 10, 2008) (IIC's primary product has been indexed annuities.); Life Insurance Company of the Southwest (''LSW'') (Best's Company Reports, Life Ins. Co. of the Southwest, June 28, 2007) (LSW specializes in the sale of annuities, primarily indexed annuities.); Midland National Life Insurance Company (Best's Company Reports, Midland Nat'l Life Ins. Co., Jan. 24, 2008) (Sales of indexed annuities in recent years have been the principal driver of growth in annuity deposits.).

[13] *See* Letter of Susan E. Voss, Commissioner, Iowa Insurance Division (Nov. 18, 2008) (''Voss Letter'') (acknowledging sales practice issues and ''great deal'' of concern about suitability and disclosures in indexed annuity market). *See also*

Continued

We have observed the development of indexed annuities for some time and have become persuaded that guidance is needed with respect to their status under the federal securities laws. Given the current size of the market for indexed annuities, we believe that it is important for all parties, including issuers, sellers, and purchasers, to understand, in advance, the legal status of these products and the rules and protections that apply. Today, we are adopting rules that will provide greater clarity regarding the scope of the exemption provided by Section 3(a)(8). We believe our action is consistent with Congressional intent in that the definition will afford the disclosure, antifraud, and sales practice protections of the federal securities laws to purchasers of indexed annuities who are more likely than not to receive payments that vary in accordance with the performance of a security. In addition, the rules will provide relief from Exchange Act reporting obligations to the insurers that issue these indexed annuities and certain other securities that are regulated as insurance under state law. We base the Exchange Act exemption on two factors: First, the nature and extent of the activities of insurance company issuers, and their income and assets, and, in particular, the regulation of these activities and assets under state insurance law; and, second, the absence of trading interest in the securities.

A. Description of Indexed Annuities

An indexed annuity is a contract issued by a life insurance company that generally provides for accumulation of the purchaser's payments, followed by payment of the accumulated value to the purchaser either as a lump sum, upon death or withdrawal, or as a series of payments (an ''annuity''). During the accumulation period, the insurer credits the purchaser with a return that is based on changes in a securities index, such as the Dow Jones Industrial Average, Lehman Brothers Aggregate U.S. Index, Nasdaq 100 Index, or Standard & Poor's 500 Composite Stock Price Index. The insurer also guarantees a minimum value to the purchaser.[14] The specific features of indexed annuities vary from product to product. Some key features, found in many indexed annuities, are as follows.

Computation of Index-Based Return

The purchaser's index-based return under an indexed annuity depends on the particular combination of features specified in the contract. Typically, an indexed annuity specifies all aspects of the formula for computing return in advance of the period for which return is to be credited, and the crediting period is generally at least one year long.[15] The rate of the index-based return is computed at the end of the crediting period, based on the actual performance of a specified securities index during that period, but the computation is performed pursuant to a mathematical formula that is guaranteed in advance of the crediting period. Common indexing features are described below.

• *Index.* Indexed annuities credit return based on the performance of a securities index, such as the Dow Jones Industrial Average, Lehman Brothers Aggregate U.S. Index, Nasdaq 100 Index, or Standard & Poor's 500 Composite Stock Price Index. Some annuities permit the purchaser to select one or more indices from a specified group of indices.

• *Determining Change in Index.* There are several methods for determining the change in the relevant index over the crediting period.[16] For example, the ''point-to-point'' method compares the index level at two discrete points in time, such as the beginning and ending dates of the crediting period. Typically, in determining the amount of index change, dividends paid on securities underlying the index are not included. Indexed annuities typically do not apply negative changes in an index to contract value. Thus, if the change in index value is negative over the course of a crediting period, no deduction is taken from contract value nor is any index-based return credited.[17]

• *Portion of Index Change to be Credited.* The portion of the index change to be credited under an indexed annuity is typically determined through the application of caps, participation rates, spread deductions, or a combination of these features.[18] Some contracts ''cap'' the index-based returns that may be credited. For example, if the change in the index is 6%, and the contract has a 5% cap, 5% would be credited. A contract may establish a ''participation rate,'' which is multiplied by index growth to determine the rate to be credited. If the change in the index is 6%, and a contract's participation rate is 75%, the rate credited would be 4.5% (75% of 6%). In addition, some indexed annuities may deduct a percentage, or spread, from the amount of gain in the index in determining return. If the change in the index is 6%, and a contract has a spread of 1%, the rate credited would be 5% (6% minus 1%).

Surrender Charges

Surrender charges are commonly deducted from withdrawals taken by a purchaser.[19] The maximum surrender charges, which may be as high as 15–20%,[20] are imposed on surrenders made during the early years of the contract and decline gradually to 0% at the end of a specified surrender charge period, which may be in excess of 15 years.[21]

FINRA, Equity Indexed Annuities—A Complex Choice (updated Apr. 22, 2008), available at: *http://www.finra.org/InvestorInformation/InvestorAlerts/AnnuitiesandInsurance/Equity-IndexedAnnuities-AComplexChoice/P010614* (''FINRA Investor Alert'') (investor alert on indexed annuities); Office of Compliance Inspections and Examinations, Securities and Exchange Commission, et al., *Protecting Senior Investors: Report of Examinations of Securities Firms Providing 'Free Lunch' Sales Seminars,* at 4 (Sept. 2007), available at: *http://www.sec.gov/spotlight/seniors/freelunchreport.pdf* (joint examination conducted by Commission, North American Securities Administrators Association (''NASAA''), and FINRA identified potentially misleading sales materials and potential suitability issues relating to products discussed at sales seminars, which commonly included indexed annuities); Statement of Patricia Struck, President, NASAA, at the Senior Summit of the United States Securities and Exchange Commission, July 17, 2006, available at: *http://www.nasaa.org/IssuesAnswers/Legislative_Activity/Testimony/4999.cfm* (identifying indexed annuities as among the most pervasive products involved in senior investment fraud); NTM 05–50, *supra* note 7 (citing concerns about marketing of indexed annuities and the absence of adequate supervision of sales practices).

[14] FINRA Investor Alert, supra note 13; National Association of Insurance Commissioners, *Buyer's Guide to Fixed Deferred Annuities with Appendix for Equity-Indexed Annuities,* at 9 (2007) (''NAIC Guide''); National Association for Fixed Annuities, *White Paper on Fixed Indexed Insurance Products Including 'Fixed Indexed Annuities' and Other Fixed Indexed Insurance Products,* at 1 (2006), available at: *http://www.nafa.us/index.php?act=attach&type=post&id=68* (''NAFA Whitepaper''); Jack Marrion, *Index Annuities: Power and Protection,* at 13 (2004) (''Marrion'').

[15] NAFA Whitepaper, *supra* note 14, at 13.

[16] *See* FINRA Investor Alert, *supra* note 13; NAIC Guide, *supra* note 14, at 12–14; NAFA Whitepaper, *supra* note 14, at 9–10; Marrion, *supra* note 14, at 38–59.

[17] NAIC Guide, *supra* note 14, at 11; NAFA Whitepaper, *supra* note 14, at 5 and 9; Marrion, *supra* note 14, at 2.

[18] *See* FINRA Investor Alert, *supra* note 13; NAIC Guide, *supra* note 14, at 10–11; NAFA Whitepaper, *supra* note 14, at 10; Marrion, *supra* note 14, at 38–59.

[19] *See* FINRA Investor Alert, *supra* note 13; NAIC Guide, *supra* note 14, at 3–4 and 11; NAFA Whitepaper, *supra* note 14, at 7; Marrion, *supra* note 14, at 31.

[20] The highest surrender charges are often associated with annuities in which the insurer credits a ''bonus'' equal to a percentage of purchase payments to the purchaser at the time of purchase. The surrender charge may serve, in part, to recapture the bonus.

[21] *See A Producer's Guide to Indexed Annuities 2007,* LIFE INSURANCE SELLING (June 2007), available at: *http://www.lifeinsuranceselling.com/Media/MediaManager/0607_IASurvey_1.pdf;* Equity Indexed Annuities, ANNUITYADVANTAGE, available at:

Imposition of a surrender charge may have the effect of reducing or eliminating any index-based return credited to the purchaser up to the time of a withdrawal. In addition, a surrender charge may result in a loss of principal, so that a purchaser who surrenders prior to the end of the surrender charge period may receive less than the original purchase payments.[22] Many indexed annuities permit purchasers to withdraw a portion of contract value each year, typically 10%, without payment of surrender charges.

Guaranteed Minimum Value

Indexed annuities generally provide a guaranteed minimum value, which serves as a floor on the amount paid upon withdrawal, as a death benefit, or in determining the amount of annuity payments. The guaranteed minimum value is typically a percentage of purchase payments, accumulated at a specified interest rate, and may not be lower than a floor established by applicable state insurance law. In the years immediately following their introduction, indexed annuities typically guaranteed 90% of purchase payments accumulated at 3% annual interest.[23] More recently, however, following changes in state insurance laws,[24] indexed annuities typically provide that the guaranteed minimum value is equal to at least 87.5% of purchase payments, accumulated at annual interest rate of between 1% and 3%.[25] Assuming a guarantee of 87.5% of purchase payments, accumulated at 1% interest compounded annually, it would take approximately 13 years for a purchaser's guaranteed minimum value to be 100% of purchase payments.

Registration

Insurers typically have concluded that the indexed annuities they issue are not securities. As a result, virtually all indexed annuities have been issued without registration under the Securities Act.[26]

B. Section 3(a)(8) Exemption

Section 3(a)(8) of the Securities Act provides an exemption for any ''annuity contract'' or ''optional annuity contract'' issued by a corporation that is subject to the supervision of the insurance commissioner, bank commissioner, or similar state regulatory authority.[27] The exemption, however, is not available to all contracts that are considered annuities under state insurance law. For example, variable annuities, which pass through to the purchaser the investment performance of a pool of assets, are not exempt annuity contracts.

The U.S. Supreme Court has addressed the insurance exemption on two occasions.[28] Under these cases, factors that are important to a determination of an annuity's status under Section 3(a)(8) include (1) the allocation of investment risk between insurer and purchaser, and (2) the manner in which the annuity is marketed.

With regard to investment risk, beginning with *SEC* v. *Variable Annuity Life Ins. Co.* (''*VALIC*''),[29] the Court has considered whether the risk is borne by the purchaser (tending to indicate that the product is not an exempt ''annuity contract'') or by the insurer (tending to indicate that the product falls within the Section 3(a)(8) exemption). In *VALIC,* the Court determined that variable annuities, under which payments varied with the performance of particular investments and which provided no guarantee of fixed income, were not entitled to the Section 3(a)(8) exemption. In *SEC* v. *United Benefit Life Ins. Co.* (''*United Benefit*''),[30] the Court extended the *VALIC* reasoning, finding that a contract that provides for some assumption of investment risk by the insurer may nonetheless not be entitled to the Section 3(a)(8) exemption. The *United Benefit* insurer guaranteed that the cash value of its variable annuity contract would never be less than 50% of purchase payments made and that, after ten years, the value would be no less than 100% of payments. The Court determined that this contract, under which the insurer did assume some investment risk through minimum guarantees, was not an ''annuity contract'' under the federal securities laws. In making this determination, the Court concluded that ''the assumption of an investment risk cannot by itself create an insurance provision under the federal definition'' and distinguished a ''contract which to some degree is insured'' from a ''contract of insurance.''[31]

In analyzing investment risk, Justice Brennan's concurring opinion in VALIC applied a functional analysis to determine whether a new form of investment arrangement that emerges and is labeled ''annuity'' by its promoters is the sort of arrangement that Congress was willing to leave exclusively to the state insurance commissioners. In that inquiry, the purposes of the federal securities laws and state insurance laws are important. Justice Brennan noted, in particular, that the emphasis in the Securities Act is on disclosure and that the philosophy of the Act is that ''full disclosure of the details of the enterprise in which the investor is to put his money should be made so that he can intelligently appraise the risks involved.''[32] We agree with the concurring opinion's analysis. Where an investor's investment in an annuity is sufficiently protected by the insurer, state insurance law regulation of insurer solvency and the adequacy of reserves are relevant. Where the investor's investment is not sufficiently protected, the disclosure

http://datafeeds.annuityratewatch.com/annuityadvantage/fixed-indexed-accounts.htm.

[22] FINRA Investor Alert, *supra* note 13; Marrion, *supra* note 14, at 31.

[23] 1997 Concept Release, *supra* note 7 (concept release requesting comments on structure of equity indexed insurance products, the manner in which they are marketed, and other matters the Commission should consider in addressing federal securities law issues raised by these products). *See also* Letter from American Academy of Actuaries (Jan. 5, 1998); Letter from Aid Association for Lutherans (Nov. 19, 1997) (comment letters in response to 1997 Concept Release). The comment letters on the 1997 Concept Release are available for public inspection and copying in the Commission's Public Reference Room, 100 F Street, NE., Washington, DC (File No. S7–22–97). Those comment letters that were transmitted electronically to the Commission are also available on the Commission's Web site at *http://www.sec.gov/rules/concept/s72297.shtml.*

[24] *See, e.g.*, CAL. INS. CODE § 10168.25 (West 2007) & IOWA CODE § 508.38 (2008) (current requirements, providing for guarantee based on 87.5% of purchase payments accumulated at minimum of 1% annual interest); CAL. INS. CODE § 10168.2 (West 2003) & IOWA CODE § 508.38 (2002) (former requirements, providing for guarantee for single premium annuities based on 90% of premium accumulated at minimum of 3% annual interest).

[25] NAFA Whitepaper, *supra* note 14, at 6.

[26] In a few instances, insurers have registered indexed annuities as securities as a result of particular features, such as the absence of any guaranteed interest rate or the absence of a guaranteed minimum value. *See, e.g.*, Pre-Effective Amendment No. 4 to Registration Statement on Form S–1 of PHL Variable Insurance Company (File No. 333–132399) (filed Feb. 7, 2007); Pre-Effective Amendment No. 1 to Registration Statement on Form S–3 of Allstate Life Insurance Company (File No. 333–105331) (filed May 16, 2003); Initial Registration Statement on Form S–2 of Golden American Life Insurance Company (File No. 333–104547) (filed Apr. 15, 2003).

[27] The Commission has previously stated its view that Congress intended any insurance contract falling within Section 3(a)(8) to be excluded from all provisions of the Securities Act notwithstanding the language of the Act indicating that Section 3(a)(8) is an exemption from the registration but not the antifraud provisions. Securities Act Release No. 6558 (Nov. 21, 1984) [49 FR 46750, 46753 (Nov. 28, 1984)]. *See also Tcherepnin* v. *Knight,* 389 U.S. 332, 342 n.30 (1967) (Congress specifically stated that ''insurance policies are not to be regarded as securities subject to the provisions of the [Securities] act,'' (*quoting* H.R. Rep. 85, 73d Cong., 1st Sess. 15 (1933)).

[28] *VALIC, supra* note 8, 359 U.S. 65; *United Benefit, supra* note 8, 387 U.S. 202.

[29] *VALIC, supra* note 8, 359 U.S. at 71–73.

[30] *United Benefit, supra* note 8, 387 U.S. at 211.

[31] *Id.* at 211.

[32] *VALIC, supra* note 8, 359 U.S. at 77.

protections of the Securities Act assume importance.

Marketing is another significant factor in determining whether a state-regulated insurance contract is entitled to the Securities Act ''annuity contract'' exemption. In *United Benefit,* the U.S. Supreme Court, in holding an annuity to be outside the scope of Section 3(a)(8), found significant the fact that the contract was ''considered to appeal to the purchaser not on the usual insurance basis of stability and security but on the prospect of 'growth' through sound investment management.'' [33] Under these circumstances, the Court concluded ''it is not inappropriate that promoters' offerings be judged as being what they were represented to be.'' [34]

In 1986, given the proliferation of annuity contracts commonly known as ''guaranteed investment contracts,'' the Commission adopted rule 151 under the Securities Act to establish a ''safe harbor'' for certain annuity contracts that are not deemed subject to the federal securities laws and are entitled to rely on Section 3(a)(8) of the Securities Act.[35] Under rule 151, an annuity contract issued by a state-regulated insurance company is deemed to be within Section 3(a)(8) of the Securities Act if (1) the insurer assumes the investment risk under the contract in the manner prescribed in the rule; and (2) the contract is not marketed primarily as an investment.[36] Rule 151 essentially codifies the tests the courts have used to determine whether an annuity contract is entitled to the Section 3(a)(8) exemption, but adds greater specificity with respect to the investment risk test. Under rule 151, an insurer is deemed to assume the investment risk under an annuity contract if, among other things,

(1) The insurer, for the life of the contract,

(a) Guarantees the principal amount of purchase payments and credited interest, less any deduction for sales, administrative, or other expenses or charges; and

(b) Credits a specified interest rate that is at least equal to the minimum rate required by applicable state law; and

(2) The insurer guarantees that the rate of any interest to be credited in excess of the guaranteed minimum rate described in paragraph 1(b) will not be modified more frequently than once per year.[37]

Indexed annuities are not entitled to rely on the safe harbor of rule 151 because they fail to satisfy the requirement that the insurer guarantee that the rate of any interest to be credited in excess of the guaranteed minimum rate will not be modified more frequently than once per year.[38]

III. Discussion of the Amendments

The Commission has determined that providing greater clarity with regard to the status of indexed annuities under the federal securities laws will enhance investor protection, as well as provide greater certainty to the issuers and sellers of these products with respect to their obligations under the federal securities laws. We are adopting a new definition of ''annuity contract'' that, on a prospective basis, defines a class of indexed annuities that are outside the scope of Section 3(a)(8). With respect to these annuities, investors will be entitled to all the protections of the federal securities laws, including full and fair disclosure and antifraud and sales practice protections. We are also adopting a new exemption under the Exchange Act that applies to insurance companies that issue indexed annuities and certain other securities that are registered under the Securities Act and regulated as insurance under state law. We believe that this exemption is necessary or appropriate in the public interest and consistent with the protection of investors because of the presence of state oversight of insurance company financial condition and the absence of trading interest in these securities.

A. Definition of Annuity Contract

The Commission is adopting new rule 151A, which defines a class of indexed annuities that are not ''annuity contracts'' or ''optional annuity contracts'' [39] for purposes of Section 3(a)(8) of the Securities Act. Although we recognize that these instruments are issued by insurance companies and are treated as annuities under state law, these facts are not conclusive for purposes of the analysis under the federal securities laws.

1. Analysis

''Insurance'' and ''Annuity'': Federal Terms Under the Federal Securities Laws

Our analysis begins with the well-settled conclusion that the terms ''insurance'' and ''annuity contract'' as used in the Securities Act are ''federal terms,'' the meanings of which are a ''federal question'' under the federal securities laws.[40] The Securities Act does not provide a definition of either term, and we have not previously provided a definition that applies to indexed annuities.[41] Moreover, indexed

[33] *United Benefit, supra* note 8, 387 U.S. at 211.

[34] *Id.* at 211 (quoting *SEC* v. *Joiner Leasing Corp.,* 320 U.S. 344, 352–53 (1943)). For other cases applying a marketing test, see *Berent* v. *Kemper Corp.,* 780 F. Supp. 431 (E.D. Mich. 1991), aff'd, 973 F. 2d 1291 (6th Cir. 1992); *Associates in Adolescent Psychiatry* v. *Home Life Ins. Co.,* 729 F.Supp. 1162 (N.D. Ill. 1989), *aff'd,* 941 F.2d 561 (7th Cir. 1991); and *Grainger* v. *State Security Life Ins. Co.,* 547 F.2d 303 (5th Cir. 1977).

[35] 17 CFR 230.151; Securities Act Release No. 6645 (May 29, 1986) [51 FR 20254 (June 4, 1986)]. A guaranteed investment contract is a deferred annuity contract under which the insurer pays interest on the purchaser's payments at a guaranteed rate for the term of the contract. In some cases, the insurer also pays discretionary interest in excess of the guaranteed rate.

[36] 17 CFR 230.151(a).

[37] 17 CFR 230.151(b) and (c). In addition, the value of the contract may not vary according to the investment experience of a separate account.

[38] Some indexed annuities also may fail other aspects of the safe harbor test.

In adopting rule 151, the Commission declined to extend the safe harbor to excess interest rates that are computed pursuant to an indexing formula that is guaranteed for one year. Rather, the Commission determined that it would be appropriate to permit insurers to make limited use of index features, provided that the insurer specifies an index to which it would refer, no more often than annually, to determine the excess interest rate that it would guarantee for the next 12-month or longer period. For example, an insurer would meet this test if it established an ''excess'' interest rate of 5% by reference to the past performance of an external index and then guaranteed to pay 5% interest for the coming year. Securities Act Release No. 6645, *supra* note 35, 51 FR at 20260. The Commission specifically expressed concern that index feature contracts that adjust the rate of return actually credited on a more frequent basis operate less like a traditional annuity and more like a security and that they shift to the purchaser all of the investment risk regarding fluctuations in that rate. *See infra* note 71 and accompanying text.

[39] An ''optional annuity contract'' is a deferred annuity. *See United Benefit, supra* note 8, 387 U.S. at 204. In a deferred annuity, annuitization begins at a date in the future, after assets in the contract have accumulated over a period of time (normally many years). In contrast, in an immediate annuity, the insurer begins making annuity payments shortly after the purchase payment is made, *i.e.*, within one year. *See* Kenneth Black, Jr., and Harold D. Skipper, Jr., *Life and Health Insurance,* at 164 (2000).

[40] *See VALIC, supra* note 8, 359 U.S. at 69. Although the McCarran-Ferguson Act, 15 U.S.C. 1012(b), provides that ''No Act of Congress shall be construed to invalidate, impair or supersede any law enacted by any State for the purpose of regulating the business of insurance,'' the United States Supreme Court has stated that the question common to both the federal securities laws and the McCarran-Ferguson Act is whether the instruments are contracts of insurance. *See VALIC, supra* note 8. Thus, where a contract is not an ''annuity contract'' or ''optional annuity contract,'' which we have concluded is the case with respect to certain indexed annuities, we do not believe that such contract is ''insurance'' for purposes of the McCarran-Ferguson Act.

[41] The last time the Commission formally addressed indexed annuities was in 1997. At that time, the Commission issued a concept release requesting public comment regarding indexed insurance contracts. The concept release stated that ''depending on the mix of features * * * [an indexed insurance contract] may or may not be entitled to exemption from registration under the Securities Act'' and that the Commission was

annuities did not exist and were not contemplated by Congress when it enacted the insurance exemption.

We therefore analyze indexed annuities under the facts and circumstances factors articulated by the U.S. Supreme Court in *VALIC* and *United Benefit.* In particular, we focus on whether these instruments are ''the sort of investment form that Congress was * * * willing to leave exclusively to the State Insurance Commissioners'' and whether they necessitate the ''regulatory and protective purposes'' of the Securities Act.[42]

Type of Investment

We believe that the indexed annuities that will be included in our definition are not the sort of investment that Congress contemplated leaving exclusively to state insurance regulation. According to the U.S. Supreme Court, Congress intended to include in the insurance exemption only those policies and contracts that include a ''true underwriting of risks'' and ''investment risk-taking'' by the insurer.[43] Moreover, the level of risk assumption necessary for a contract to be ''insurance'' under the Securities Act must be meaningful—the assumption of an investment risk does not ''by itself create an insurance provision under the federal definition.'' [44]

The annuities that ''traditionally and customarily'' were offered at the time Congress enacted the insurance exemption were fixed annuities that typically involved no investment risk to the purchaser.[45] These contracts offered the purchaser ''specified and definite amounts beginning with a certain year of his or her life,'' and the ''standards for investments of funds'' by the insurer under these contracts were ''conservative.'' [46] Moreover, these types of annuity contracts were part of a ''concept which had taken on its coloration and meaning largely from state law, from state practice, from state usage.'' [47] Thus, Congress exempted these instruments from the requirements of the federal securities laws because they were a ''form of 'investment' * * * which did not present very squarely the problems that [the federal securities laws] were devised to deal with,'' and were ''subject to a form of state regulation of a sort which made the federal regulation even less relevant.'' [48]

In contrast, when the amounts payable by an insurer under an indexed annuity contract are more likely than not to exceed the amounts guaranteed under the contract, the purchaser assumes substantially different risks and benefits. Notably, at the time that such a contract is purchased, the risk for the unknown, unspecified, and fluctuating securities-linked portion of the return is primarily assumed by the purchaser.

By purchasing this type of indexed annuity, the purchaser assumes the risk of an uncertain and fluctuating financial instrument, in exchange for participation in future securities-linked returns. The value of such an indexed annuity reflects the benefits and risks inherent in the securities market, and the contract's value depends upon the trajectory of that same market. Thus, the purchaser obtains an instrument that, by its very terms, depends on market volatility and risk.

Such indexed annuity contracts provide some protection against the risk of loss, but these provisions do not, ''by [themselves,] create an insurance provision under the federal definition.'' [49] Rather, these provisions reduce—but do *not eliminate*—a purchaser's exposure to investment risk under the contract. These contracts may to some degree be insured, but that degree may be too small to make the indexed annuity a contract of insurance.[50]

Thus, the protections provided by indexed annuities may not adequately transfer investment risk from the purchaser to the insurer when amounts payable by an insurer under the contract are more likely than not to exceed the amounts guaranteed under the contract. Purchasers of these annuities assume the investment risk for investments that are more likely than not to fluctuate and move with the securities markets. The value of the purchaser's investment is more likely than not to depend on movements in the underlying securities index. The protections offered in these indexed annuities may give the instruments an aspect of insurance, but we do not believe that these protections are substantial enough.[51]

Need for the Regulatory Protections of the Federal Securities Acts

We also analyze indexed annuities to determine whether they implicate the regulatory and protective purposes of the federal securities laws. Based on that analysis, we believe that the indexed annuities that are included in the definition that we are adopting present many of the concerns that Congress intended the federal securities laws to address.

Indexed annuities are similar in many ways to mutual funds, variable annuities, and other securities. Although these contracts contain certain features that are typical of insurance contracts,[52] they also may contain ''to a very substantial degree elements of investment contracts.'' [53] Indexed annuities are attractive to purchasers precisely because they offer participation in the securities markets. However, indexed annuities historically have not been registered with us as securities. Insurers have treated these

''considering the status of [indexed annuities and other indexed insurance contracts] under the federal securities laws.'' *See* 1997 Concept Release, *supra* note 7, at 4–5.

The Commission has previously adopted a safe harbor for certain annuity contracts that are entitled to rely on Section 3(a)(8) of the Securities Act. However, as discussed in Part II.B., indexed annuities are not entitled to rely on the safe harbor.

[42] *See VALIC, supra* note 8, 359 U.S. at 75 (Brennan, J., concurring) (''* * * if a brand-new form of investment arrangement emerges which is labeled 'insurance' or 'annuity' by its promoters, the functional distinction that Congress set up in 1933 and 1940 must be examined to test whether the contract falls within the sort of investment form that Congress was then willing to leave exclusively to the State Insurance Commissioners. In that inquiry, an analysis of the regulatory and protective purposes of the Federal Acts and of state insurance regulation as it then existed becomes relevant.'').

[43] *Id.* at 71–73.

[44] *See United Benefit, supra* note 8, 387 U.S. at 211 (''[T]he assumption of investment risk cannot by itself create an insurance provision. * * * The basic difference between a contract which to some degree is insured and a contract of insurance must be recognized.'').

[45] *See VALIC, supra* note 8, 359 U.S. at 69.

[46] *Id.* (''While all the States regulate 'annuities' under their 'insurance' laws, traditionally and customarily they have been fixed annuities, offering the annuitant specified and definite amounts beginning with a certain year of his or her life. The standards for investment of funds underlying these annuities have been conservative.'').

[47] *Id.* (''Congress was legislating concerning a concept which had taken on its coloration and meaning largely from state law, from state practice, from state usage.'').

[48] *Id.* at 75 (Brennan, J., concurring).

[49] *See United Benefit, supra* note 8, 387 U.S. at 211 (finding that while a ''guarantee of cash value'' provided by an insurer to purchasers of a deferred annuity plan reduced ''substantially the investment risk of the contract holder, the assumption of investment risk cannot by itself create an insurance provision under the federal definition.'').

[50] *Id.* at 211 (''The basic difference between a contract which to some degree is insured and a contract of insurance must be recognized.'').

[51] *See VALIC, supra* note 8, 359 U.S. at 71 (finding that although the insurer's assumption of a traditional insurance risk gives variable annuities an ''aspect of insurance,'' this is ''apparent, not real; superficial, not substantial.'').

[52] The presence of protection against loss does not, in itself, transform a security into an insurance or annuity contract. Like indexed annuities, variable annuities typically provide some protection against the risk of loss, but are registered as securities. Historically, variable annuity contracts have typically provided a minimum death benefit at least equal to the greater of contract value or purchase payments less any withdrawals. More recently, many contracts have offered benefits that protect against downside market risk during the purchaser's lifetime.

[53] *VALIC, supra* note 8, 359 U.S. at 91 (Brennan, J., concurring).

annuities as subject only to state insurance laws.

There is a strong federal interest in providing investors with disclosure, antifraud, and sales practice protections when they are purchasing annuities that are likely to expose them to market volatility and risk. We believe that individuals who purchase indexed annuities that are more likely than not to provide payments that vary with the performance of securities are exposed to significant investment risks. They are confronted with many of the same risks and benefits that other securities investors are confronted with when making investment decisions. Moreover, they are more likely than not to experience market volatility because they are more likely than not to receive payments that vary with the performance of securities.

We believe that the regulatory objectives that Congress was attempting to achieve when it enacted the Securities Act are present when the amounts payable by an insurer under an indexed annuity contract are more likely than not to exceed the guaranteed amounts. Therefore, we are adopting a rule that will define such contracts as falling outside the insurance exemption.

2. Commenters' Concerns Regarding Commission's Analysis

Many commenters raised significant concerns regarding the Commission's analysis of indexed annuities under Section 3(a)(8). Commenters argued that the Commission's analysis is inconsistent with applicable legal precedent, particularly the *VALIC* and *United Benefit* cases. Specifically, the commenters argued that the purchaser of an indexed annuity does not assume investment risk in the sense contemplated by applicable precedent, that the Commission failed to take into account the investment risk assumed by the insurer, and that the Commission's analysis ignored the factors of marketing and mortality risk which have been articulated in applicable precedents. In addition, commenters questioned the need for federal securities regulation of indexed annuities, arguing that there is no evidence of widespread sales practice abuse in the indexed annuity marketplace, that state insurance regulators are effective in protecting purchasers of indexed annuities, and that the Commission's disclosure requirements would not result in enhanced information flow to purchasers of indexed annuities. We disagree with each of these assertions for the reasons outlined below.

Commission's Analysis is Consistent With Applicable Precedents

We disagree with commenters who argued that the Commission's analysis is inconsistent with applicable legal precedents, particularly the *VALIC* and United Benefit cases.[54] These commenters asserted, first, that because of guarantees of principal and minimum interest, the purchaser of an indexed annuity does not assume investment risk in the sense contemplated by applicable precedent which, in their view, is the risk of loss of principal. Second, the commenters argued that the Commission's analysis failed to take into account the investment risk assumed by the insurer, including the risk associated with guaranteeing principal and a minimum interest rate and with guaranteeing in advance the formula for determining index-linked return. Third, commenters argued that the Commission's analysis is inconsistent with precedent because it does not take into account the manner in which indexed annuities are marketed.[55] Fourth, commenters faulted the Commission's analysis for ignoring mortality risk.[56]

Our investment risk analysis is an application of the Court's reasoning in the *VALIC* and *United Benefit* cases, and rule 151A applies that analysis with a specific test to determine the status under the federal securities laws of indexed annuities. Indexed annuities are a relatively new product and are different from the securities considered in those cases. These very differences have resulted in the uncertain legal status of indexed annuities from their introduction in the mid-1990s. Like the contract at issue in *United Benefit*, indexed annuities present a new case that requires us to determine whether ''a contract which to some degree is insured'' constitutes a ''contract of insurance'' for purposes of the federal securities laws.[57] Indexed annuities offer to purchasers a financial instrument with uncertain and fluctuating returns that are, in part, securities-linked. We believe that whether such an instrument is a security hinges on the likelihood that the purchaser's return will, in fact, be based on the returns of a securities index. In cases where the amounts payable by an insurer under an indexed annuity contract are more likely than not to exceed the amounts guaranteed under the contract, the amount the purchaser receives will be dependent on market returns and will vary because of investment risk. In such a case, we have concluded that, on a prospective basis, the indexed annuity is not entitled to rely on the Section 3(a)(8) exemption. Though the contract may to some degree be insured, it is not a contract of insurance because of the substantial investment risk assumed by the purchaser.

A number of commenters equated investment risk with the risk of loss of principal for purposes of analysis under Section 3(a)(8) and argued that, because of guarantees of principal and minimum interest, the purchaser of an indexed annuity does not assume investment risk. We disagree. While the potential for loss of principal was important in the *VALIC* and *United Benefit* cases and helpful in analyzing the particular products at issue in those cases, it is by

[54] *See, e.g.*, Letter of Advantage Group Associates, Inc. (Nov. 16, 2008) (''Advantage Group Letter''); Letter of Allianz Life Insurance Company of North America (Sept. 10, 2008) (''Allianz Letter''); Letter of American Academy of Actuaries (Sept. 10, 2008) (''Academy Letter''); Letter of American Academy of Actuaries (Nov. 17, 2008) (''Second Academy Letter''); Letter of American Equity Investment Life Holding Company (Sept. 10, 2008) (''American Equity Letter''); Letter of American National Insurance Company (Sept. 10. 2008) (''American National Letter''); Letter of Aviva USA Corporation (Sept. 10, 2008) (''Aviva Letter''); Letter of Aviva USA Corporation (Nov. 17, 2008) (''Second Aviva Letter''); Letter of Coalition for Indexed Products (Sept. 10, 2008) (''Coalition Letter''); Letter of Committee of Annuity Insurers regarding proposed rule 151A (Sept. 10, 2008) (''CAI 151A Letter''); Letter of Lafayette Life Insurance Company (Sept. 10, 2008) (''Lafayette Letter''); Letter of Maryland Insurance Administration (Sept. 9, 2008) (''Maryland Letter''); Letter of the Officers of the National Association of Insurance Commissioners (Sept. 10, 2008) (''NAIC Officer Letter''); Letter of National Association for Fixed Annuities (Sept. 10, 2008) (''NAFA Letter''); Letter of National Association of Insurance and Financial Advisers (Sept. 10, 2008) (''NAIFA Letter''); Letter of National Conference of Insurance Legislators (Nov. 25, 2008) (''NCOIL Letter''); Letter of National Western Life Insurance Company (Sept. 10, 2008) (''National Western Letter''); Letter of Old Mutual Financial Network (Sept. 10, 2008) (''Old Mutual Letter''); Letter of Sammons Annuity Group (Sept. 10, 2008) (''Sammons Letter''); Letter of Transamerica Life Insurance Company (Sept. 10, 2008) (''Transamerica Letter''); Letter of Transamerica Life Insurance Company (Nov. 17, 2008) (''Second Transamerica Letter'').

Other commenters, however, supported the Commission's interpretation of Section 3(a)(8) and applicable legal precedents. *See, e.g.*, ICI Letter, *supra* note 7; Letter of K&L Gates on behalf of AXA Equitable Life Insurance Company, Hartford Financial Services Group, Inc., Massachusetts Mutual Life Insurance Company, MetLife, Inc., and New York Life Insurance Company (Oct. 7, 2008) (''K&L Gates Letter'').

[55] *See, e.g.*, Coalition Letter, *supra* note 54; Letter of The Hartford Financial Services Group, Inc. (Sept. 10, 2008) (''Hartford Letter''); NAFA Letter, *supra* note 54.

[56] *See, e.g.*, CAI 151A Letter, *supra* note 54; Old Mutual Letter, *supra* note 54; Sammons Letter, *supra* note 54.

[57] *See United Benefit, supra* note 8, 387 U.S. at 211 (''The basic difference between a contract which to some degree is insured and a contract of insurance must be recognized.'').

no means the only type of investment risk. Defining risk only as the possibility of principal loss or an approximate equivalent, as suggested by commenters, fails to account for important forms of risk and leads to conclusions inconsistent with the contemporary understanding of investment risk. Such a limited definition of risk would thus be incomplete.

One widely accepted definition of ''risk'' in financial instruments is the degree to which returns deviate from their statistical expectation.[58] Accordingly, even investments guaranteeing a positive minimum return over long investment horizons, such as indexed annuities, may have returns that meaningfully and unpredictably deviate from the expected return and therefore have investment risk under this definition.

For example, accepting the definition of risk suggested by commenters as a complete characterization of risk would lead to the conclusion that any two assets that both guarantee return of principal equally have no risk. However, we believe that the market would generally view an asset where the future payoff of the amount over the guaranteed principal return is uncertain to be more risky than a zero-coupon U.S. government bond maturing at the same date, which also guarantees principal return but has a nearly certain future payoff. Defining risk as the potential for loss of principal, or principal plus some minimal amount, misses important aspects of risk as commonly understood. While U.S. government bonds are commonly accepted as the standard benchmark of a nominally risk-free rate of return because their returns are considered to be nearly certain at specific horizons, the definition suggested by commenters fails to distinguish between these risk-free assets and assets that are protected against principal loss but that have uncertain payoffs above the guaranteed principal return.[59]

Additionally, under the definition of risk suggested by the commenters, most assets with positive expected returns would appear to have little to no risk over long horizons. As an example, using reasonable assumptions it can be estimated that a value-weighted portfolio of New York Stock Exchange (''NYSE'') stocks has approximately a 6% chance of returning less than principal in 10 years, and approximately a 1% chance of returning less than principal in 20 years.[60] Despite these relatively low probabilities of losing principal over long periods of time, we believe that it is generally understood that market participants, even those with long investment horizons, bear meaningful investment risk when investing in such a diversified portfolio of stocks. Indeed, investors generally consider modest long-term returns, even if greater than 0% or some minimal rate, to be undesirable outcomes when the expected return was substantially greater. We therefore believe that the commenters' suggestion that such a portfolio is without risk is at odds both with the commonly accepted meaning of the term as well as with the definition of risk generally accepted by financial economists.

The purchaser of an indexed annuity assumes investment risk because his or her return is not known in advance and therefore varies from its expected value. When the amounts payable to the purchaser are more likely than not to exceed the guaranteed amounts, the investment risk assumed by the purchaser of an indexed annuity is substantial, and we believe that the contract should not be treated as an ''annuity contract'' for purposes of the federal securities laws. We also note that indexed annuities are not, in fact, without the risk of principal loss. An indexed annuity purchaser who surrenders the contract during the surrender charge period, which for some indexed annuities may be in excess of 15 years, may receive less than his or her original principal. Unlike a purchaser of a fixed annuity, a purchaser of an indexed annuity is dependent on favorable securities market returns to overcome the impact of the surrender charge and create a positive return rather than a loss.

We also disagree with commenters who argued that the Commission's analysis failed to take into account the investment risk assumed by the insurer, including the risk associated with guaranteeing principal and a minimum interest rate and with guaranteeing in advance the formula for determining securities-linked return. We agree with commenters that, in analyzing the status of indexed annuities under the federal securities laws, it is important to take into account the relative significance of the risks assumed by the insurer and the purchaser. In our analysis, the Commission does not ignore the risk assumed by the insurer as the commenters suggest. In fact, the rule, as proposed and adopted, specifically contemplates different outcomes based on the relative risks assumed by the insurer and purchaser. When the amounts payable by the insurer under the contract are more likely than not to exceed the amounts guaranteed, the contract loses the insurance exemption under rule 151A.

Unlike a traditional fixed annuity where the investment risk for the contract is assumed by the insurer, or a traditional variable annuity where the investment risk for the contract is assumed by the purchaser, the very mixed nature of indexed annuities led the Commission to carefully consider the relative risks assumed by both parties to the contract. The fact that the rule does not define all indexed annuities as outside Section 3(a)(8), but rather sets forth a test for analyzing these contracts, reflects the Commission's understanding that the status of these contracts under the federal securities laws hinges on the allocation of risk between both the insurer and the purchaser. Specifically, the rule recognizes that where the insurer is more likely than not to pay an amount that is fixed and guaranteed by the insurer, significant investment risks are assumed by the insurer and such a contract may therefore be entitled to the Section 3(a)(8) exemption. Conversely, where the purchaser is more likely than not to receive an amount that is variable and dependent on fluctuations and movements in the securities markets, rule 151A recognizes the significant investment risks assumed by the purchaser and specifies that such a contract would not be considered to fall within Section 3(a)(8). Moreover, both the guaranteed interest rate within an indexed annuity and the formula for crediting interest are typically reset on an annual basis. This provides insurers with a number of ways to reduce or eliminate their investment risks, including hedging market risk through the purchase of options or other derivatives and adjusting guarantees downwards in subsequent years to offset losses in earlier years of a contract. For purposes of analysis under Section 3(a)(8), we do not consider these investment risks to be comparable to

[58] Zvi Bodie, Alex Kane and Alan J. Marcus, *Investments*, at 143 (2005) (''The standard deviation of the rate of return is a measure of risk.'').

[59] Zvi Bodie, Alex Kane and Alan J. Marcus, *Investments*, at 144 (2005).

[60] Our Office of Economic Analysis conducted a simulation, in which annual returns from the Center for Research in Security Prices (''CRSP'') capitalization-weighted NYSE index, annually rebalanced, from 1926 through 2007, are drawn randomly and aggregated (a bootstrap procedure). This procedure replicates the observed mean, standard deviation, skewness, kurtosis, and other observed moments of returns, but assumes that returns are intertemporally independent. Realized 10-year returns in this period are negative 4% of the time, and there have been no 20-year negative returns.

those of the indexed annuity purchaser, who bears the risk of a fluctuating and uncertain return based on the performance of a securities index.

Some commenters argued that the Commission's investment risk analysis is inconsistent with its own position in the Brief for the United States as Amicus Curiae in *Variable Annuity Life Insurance Company, et al.* v. *Otto* (''*VALIC* v. *Otto*'').[61] That matter involved an annuity in which the insurer guaranteed principal and a minimum rate of interest and also could, in its discretion, credit excess interest above the guaranteed rate. The Commission argued that by guaranteeing principal and an adequate fixed rate of interest, and guaranteeing payment of all discretionary excess interest declared under the contract, the insurer assumed sufficient investment risk under the contract for it to fall within Section 3(a)(8), notwithstanding the assumption of the risk by the contract owner that the excess interest rate could be reduced or eliminated at the insurer's discretion.

We agree with commenters that our analysis is different from the position taken by the Commission in the *VALIC* v. *Otto* brief. However, this results from the fact that indexed annuity contracts are different from the contracts considered in *VALIC* v. *Otto*. Unlike the contracts in that case, which were annuity contracts that provided for wholly discretionary payment of excess interest, indexed annuities contractually specify that excess interest will be calculated by reference to a securities index. As a result, the purchaser of an indexed annuity is contractually bound to assume the investment risk for the fluctuations and movements in the underlying securities index. The contract in *VALIC* v. *Otto* did not impose this securities-linked investment risk on the purchaser. Moreover, we note that the Supreme Court did not grant certiorari in *VALIC* v. *Otto*. The final opinion in the case was rendered by the Seventh Circuit and was to the effect that, as a result of the insurer's discretion to declare excess interest under the contract, the insurer's guarantees were not sufficient to exempt the contract from the federal securities laws. Thus, the Commission's position in the case was not adopted by either the Seventh Circuit or the Supreme Court. We believe that the position articulated in the *VALIC* v. *Otto* brief is not relevant in the context of indexed annuities and, to the extent that the brief may imply otherwise, the position taken in the brief does not reflect the Commission's current position. Where the contractual return paid by an insurer under an annuity contract is retroactively determined based, in whole or in part, on the returns of a security in a prior period, we do not believe that fact—and the investment risk that it entails—can be ignored in determining whether the contract is an ''annuity contract'' that is entitled to the Section 3(a)(8) exemption.

Though rule 151A does not explicitly incorporate a marketing factor, we disagree with commenters who argued that the Commission's analysis is inconsistent with precedent, because it does not take into account the manner in which indexed annuities are marketed.[62] The very nature of an indexed annuity, where return is contractually linked to the return on a securities index, is, to a very substantial extent, designed to appeal to purchasers on the prospect of investment growth.[63] This is particularly true in the case of indexed annuities that rule 151A defines as not ''annuity contracts''—*i.e.*, indexed annuities where the purchaser is more likely than not to receive securities-linked returns. It would be inconsistent with the character of such an indexed annuity, and potentially misleading, to market the annuity without placing significant emphasis on the securities-linked return and the related risks. We disagree with commenters who argued that purchasers do not buy indexed annuities on the basis of the prospect for investment growth, but rather on the basis of guarantees and stability of principal.[64] We agree with commenters that purchasers of indexed annuities, just like purchasers of variable annuities, have a blend of reasons for their purchase, including product guarantees and tax deferral.[65] However, we also believe that purchasers who are uninterested in the growth offered by securities-linked returns would opt for higher fixed returns in lieu of the lower fixed returns, coupled with the prospect of securities-linked growth, offered by indexed annuities. Indeed, data submitted by one indexed annuity issuer confirm that almost half (46.60%) of its 2008 indexed annuity purchasers identify the prospect for growth as a reason for their purchase.[66] Just as with variable annuities, the fact that indexed annuities appeal to purchasers for a variety of reasons does not detract from the significant appeal of securities-linked growth. Accordingly, we have concluded that, in light of the nature of indexed annuities, it is unnecessary to include a separate marketing factor within rule 151A. The Supreme Court did not address marketing in *VALIC*. Similarly, we have concluded that a separate marketing analysis is unnecessary in the case of indexed annuities that are addressed by rule 151A.

Nor do we agree with commenters who argued that the Commission's analysis departs from precedent in that it does not take into account mortality risk.[67] In both *VALIC* and *United Benefit*, the Supreme Court found the investment risk test to be determinative (together with the marketing test in the case of United Benefit) that an insurance contract was not entitled to the Section 3(a)(8) exemption. While the Commission has stated, and we continue to believe, that the presence or absence of assumption of mortality risk may be an appropriate factor to consider in a Section 3(a)(8) analysis,[68] we do not believe that it should be given undue weight in determining the status of a contract under the federal securities laws, where it is clear from the nature of the investment risk that the contract is not an ''annuity contract'' for securities law purposes. We have concluded that this is the case for an indexed annuity where the amounts payable by the insurance company under the contract are more likely than not to exceed the amounts guaranteed under the contract.

Some commenters criticized the Commission for failing to adequately address a federal district court decision, *Malone* v. *Addison Ins. Marketing, Inc.* (''*Malone*''),[69] where the court

[61] Brief for the United States as Amicus Curiae on Petition for a Writ of Certiorari to the United States Court of Appeals for the Seventh Circuit, *VALIC* v. *Otto*, No. 87–600, October Term, 1987. *See, e.g.*, Aviva Letter, *supra* note 54; CAI 151A Letter, *supra* note 54; Coalition Letter, *supra* note 54; NAFA Letter, *supra* note 54.

[62] *See, e.g.*, Coalition Letter, *supra* note 54; NAFA Letter, *supra* note 54; Old Mutual Letter, *supra* note 54; Sammons Letter, *supra* note 54.

[63] *See, e.g.*, K&L Gates Letter, *supra* note 54. *But see* Letter of National Western Life Insurance Company (Nov. 17, 2008) (''Second National Western Letter'') (criticizing the K&L Gates position).

[64] *See, e.g.*, Allianz Letter, *supra* note 54; American Equity Letter, *supra* note 54; Coalition Letter, *supra* note 54.

[65] *See, e.g.*, Allianz Letter, *supra* note 54 (55.45% purchased indexed annuities because of guarantees and 54.88% because of tax deferral).

[66] *See* Allianz Letter, *supra* note 54. *But see* Coalition Letter, *supra* note 54 (sampling by some indexed annuity issuers reveals that a large majority of purchasers acquire fixed annuities for stability of premiums). We are not able to ascertain from the statement in the Coalition Letter the degree to which purchasers identified growth as a goal as the letter addressed only stability of premiums.

[67] *See, e.g.*, CAI 151A Letter, *supra* note 54; Old Mutual Letter, *supra* note 54; Sammons Letter, *supra* note 54.

[68] Securities Act Release No. 6645, *supra* note 35.

[69] 225 F.Supp. 2d 743 (W.D. Ky. 2002).

determined that a particular indexed annuity was entitled to rely on Section 3(a)(8).[70] We disagree with the *Malone* court's analysis of investment risk, which, we believe, understated the investment risk to the purchaser of an indexed annuity from the fluctuating and uncertain securities-linked return and therefore is inconsistent with applicable legal precedent. We also disagree with the court's interpretation of the Commission's rule 151 safe harbor, which does not apply to indexed annuities. As we discussed in the proposing release, in that case, the district court concluded that the contracts at issue fell within the Commission's rule 151 safe harbor notwithstanding the fact that they apparently did not meet the test articulated by the Commission in adopting rule 151, *i.e.*, specifying an index that would be used to determine a rate that would remain in effect for at least one year.[71] Instead, the contracts appear to have guaranteed the index-based formula, but not, as required by rule 151, the actual rate of interest.

Need for Federal Securities Regulation

Some commenters agreed that federal securities regulation is needed with respect to indexed annuities.[72] Other commenters questioned the need for federal securities regulation of indexed annuities, and we disagree with those commenters. These commenters argued, first, that there is no evidence of widespread sales practice abuse in the indexed annuity marketplace, which would suggest a need for federal securities regulation.[73] Second, commenters argued that state insurance regulators are effective in protecting purchasers of indexed annuities.[74] Third, commenters argued that the Commission's disclosure requirements would not result in enhanced information flow to purchasers of indexed annuities.[75]

We believe that the commenters who argued that regulation of indexed annuities under the federal securities laws is unnecessary because there is no evidence of widespread sales abuse misunderstand the exemption under Section 3(a)(8) of the Securities Act as well as our purpose in proposing, and now adopting, rule 151A. Some of these commenters cited data that they argued demonstrated that the incidence of abuse in the indexed annuity marketplace is low.[76] Some of these commenters argued that the proposing release failed to present persuasive evidence of sales practice abuse.[77]

A vital aspect of the Commission's mission is investor protection. As a result, reports of sales practice abuses surrounding a product, indexed annuities, whose status has long been unresolved under the federal securities laws, are a matter of grave concern to us. However, the presence or absence of sales practice abuses is irrelevant in determining whether an annuity contract is entitled to the exemption from federal securities regulation under Section 3(a)(8) of the Securities Act. Where an annuity contract is entitled to the Section 3(a)(8) exemption, the federal securities laws do not apply, and purchasers are not entitled to their protections, regardless of whether sales practice abuses may be pervasive. Where, however, an annuity contract is not entitled to the Section 3(a)(8) exemption, which we have concluded is the case with respect to certain indexed annuities, Congress intended that the federal securities laws apply, and purchasers are entitled to the disclosure and suitability protections under those laws without regard to whether there is a single documented incident of abuse.

This view is consistent with applicable precedent which makes clear that the necessity for federal regulation arises from the characteristics of the financial instrument itself. This has been the approach of the United States Supreme Court in the two leading precedents. In those cases, the Court made a realistic judgment about the point at which a contract between a purchaser and an insurance company tips from being the sole concern of state regulators of insurance to also become the concern of the federal securities laws.

The *United Benefit* Court observed that the products at issue in that case were ''considered to appeal to the purchaser not on the usual insurance basis of stability and security but on the prospect of 'growth' through sound investment management.''[78] They were ''pitched to the same consumer interest in growth through professionally managed investment,'' and, as a result, the Court concluded that it seemed ''eminently fair that a purchaser of such a plan be afforded the same advantages of disclosure which inure to a mutual fund purchaser under Section 5 of the Securities Act.''[79]

The *United Benefit* decision picked up and extended a theme previously discussed in Justice Brennan's concurring opinion in *VALIC.* Justice Brennan examined the differing nature of state regulation of insurance and federal regulation of the securities markets. He looked at the nature of the obligation the insurer assumed and its connection to the regulation of investment policy. He concluded that there came a point when the ''contract between the investor and the organization no longer squares with the sort of contract in regard to which Congress in 1933 thought its 'disclosure' statute was unnecessary.''[80]

It is precisely this realistic judgment about identifying the appropriate circumstances in which to apply the disclosure and other regulatory protections of the federal securities laws that rule 151A makes. That is why the rule adopts the principle that an indexed annuity providing for a combination of minimum guaranteed payments plus a potentially higher payment dependent on the performance of a securities index does not qualify for the insurance exclusion in Section

[70] *See, e.g.*, Coalition Letter, *supra* note 54; NAFA Letter, *supra* note 54; Sammons Letter, *supra* note 54.

[71] *See supra* note 38.

[72] *See, e.g.*, Letter of Joseph P. Borg, Director, Alabama Securities Commission (Aug. 5, 2008) (''Alabama Letter''); Cornell Letter, *supra* note 7; Letter of Financial Planning Association (Sept. 10, 2008) (''FPA Letter''); FINRA Letter, *supra* note 7; Hartford Letter, *supra* note 55; ICI Letter, *supra* note 7; Letter of Max Maxfield, Secretary of State, State of Wyoming (Sept. 9, 2008) (''Wyoming Letter'').

[73] *See, e.g.*, American Equity Letter, *supra* note 54; Coalition Letter, *supra* note 54; Letter of FBL Financial Group (Sept. 8, 2008) (''FBL Letter''); Lafayette Letter, *supra* note 54; Maryland Letter, *supra* note 54; NAIFA Letter, *supra* note 54; Sammons Letter, *supra* note 54.

[74] *See, e.g.*, Allianz Letter, *supra* note 54; Academy Letter, *supra* note 54; Letter of American Bankers Insurance Association (Sept. 10, 2008) (''American Bankers Letter''); American Equity Letter, *supra* note 54; American National Letter, *supra* note 54; Aviva Letter, *supra* note 54; Coalition Letter, *supra* note 54; Letter of Connecticut Insurance Commissioner (Aug. 25, 2008) (''Connecticut Letter''); Letter of Iowa Insurance Commissioner (Sept. 10, 2008) (''Iowa Letter''); Maryland Letter, *supra* note 54; NAFA Letter, *supra* note 54; NAIC Officer Letter, *supra* note 54; NAIFA Letter, *supra* note 54; National Western Letter, *supra* note 54; Old Mutual Letter, *supra* note 54; Sammons Letter, *supra* note 54; Transamerica Letter, *supra* note 54.

[75] *See, e.g.*, Allianz Letter, *supra* note 54; Aviva Letter, *supra* note 54.

[76] See, *e.g.*, Advantage Group Letter, *supra* note 54; American Equity Letter, *supra* note 54; Maryland Letter, *supra* note 54; NAIFA Letter, *supra* note 54; Letter of Old Mutual Financial Network (Nov. 12, 2008) (''Second Old Mutual Letter''); Letter Type A (''Letter A''); Letter Type E (''Letter E''). ''Letter Type'' refers to a form letter submitted by multiple commenters, which is listed on the Commission's Web site *(http://www.sec.gov/comments/s7-14-08/s71408.shtml)* as a single comment, with a notation of the number of letters received by the Commission matching that form type.

[77] *See, e.g.*, American Equity Letter, *supra* note 54; FBL Letter *supra* note 73; Maryland Letter, *supra* note 54; NAIFA Letter, *supra* note 54; Old Mutual Letter, *supra* note 54; Sammons Letter, *supra* note 54; Second National Western Letter, *supra* note 63.

[78] *United Benefit, supra* note 8, 387 U.S. at 211.

[79] *Id.*

[80] *VALIC, supra* note 8, 359 U.S. at 72.

3(a)(8) when the amounts payable by the insurer under the contact are more likely than not to exceed the amounts guaranteed under the contract.

Our intent in adopting rule 151A is to clarify the status of indexed annuities under the federal securities laws, so that purchasers of these products receive the protections to which they are entitled by federal law and so that issuers and sellers of these products are not subject to uncertainty and litigation risk with respect to the laws that are applicable. We expect that clarity will enhance investor protection in the future, and indeed will help prevent future sales practice abuses, but rule 151A is not based on the perception that there are widespread sales abuses in the indexed annuity marketplace. Rather, the rule is intended to address an uncertain area of the law, which, because of the growth of the indexed annuity market and allegations of sales practice abuses, has become of pressing importance.

A number of commenters cited efforts by state insurance regulators to address disclosure and sales practice concerns with respect to indexed annuities as evidence that federal securities regulation is unnecessary and could result in duplicative or overlapping regulation.[81] Commenters argued that state regulation extends beyond overseeing solvency and adequacy of the insurers' reserves, and that it is also addressed to investor protection issues such as suitability and disclosure.[82] Commenters cited, in particular, the NAIC Suitability in Annuity Transactions Model Regulation,[83] which has been adopted in 35 states,[84] and its adoption by the majority of states as evidence that states are addressing suitability concerns in connection with indexed annuity sales.[85] Commenters also noted that a number of states have adopted the NAIC Annuity Disclosure Model Regulation,[86] which has been adopted in 22 states and which requires delivery of certain disclosure documents regarding indexed annuity contracts.[87] Commenters also cited the existence of state market conduct examinations, the use of state enforcement and investigative authority, and licensing and education requirements applicable to insurance agents who sell indexed annuities.[88]

Commenters described a number of recent and ongoing efforts by state insurance regulators. Some commenters cited efforts being undertaken by individual states. For example, commenters cited an Iowa regulation which recently became effective requiring that agents receive indexed product training approved by the Iowa Insurance Division before they can sell indexed annuity products.[89] In addition, commenters stated that Iowa has partnered with the American Council of Life Insurers (''ACLI'') to operate a one-year pilot project with some ACLI members using templates developed for disclosure regarding indexed annuities, with the goal of assuring uniformity among insurers in the preparation of disclosure documents.[90] Commenters also noted recent efforts by state regulators addressed to annuities generally, such as the creation of NAIC working groups to review and consider possible improvements to the NAIC Suitability in Annuity Transactions Model Regulation and the NAIC Annuity Disclosure Model Regulation.[91]

We applaud the efforts in recent years of state insurance regulators to address sales practice complaints that have arisen with respect to indexed annuities, and it is not our intention to question the effectiveness of state regulation. Nonetheless, we do not believe that the states' regulatory efforts, no matter how strong, can substitute for our responsibility to identify securities covered by the federal securities laws and the protections Congress intended to apply. State insurance laws, enforced by multiple regulators whose primary charge is the solvency of the issuing insurance company, cannot serve as an adequate substitute for uniform, enforceable investor protections provided by the federal securities laws. Indeed, at least one state insurance regulator acknowledged the developmental nature of state efforts and the lack of uniformity in those efforts.[92] Where the purchaser of an indexed annuity assumes the investment risk of an instrument that fluctuates with the securities markets, and the contract therefore does not fall within the Section 3(a)(8) exemption, the application of state insurance regulation, no matter how effective, is not determinative as to whether the contract is subject to the federal securities laws.

Some commenters also cited voluntary measures taken by insurance companies, such as suitability reviews and the provision of plain English disclosures, as a reason why federal securities regulation of indexed annuities is unnecessary.[93] While these voluntary measures are commendable, they are not a substitute for the provisions of the federal securities laws that Congress mandated.

Finally, we note that some commenters argued that regulation of indexed annuities by the Commission would not enhance investor protection, in particular because the Commission's disclosure scheme is not tailored to these contracts.[94] Commenters cited a number of factors, including the lack of a registration form that is well-suited to indexed annuities, questions about the appropriate method of accounting to be used by insurance companies that issue indexed annuities, questions about advertising restrictions that may apply under the federal securities laws, and concerns about parity of the registration process vis-à-vis mutual funds. We acknowledge that, as a result of indexed annuity issuers having historically offered and sold their contracts without

[81] *See, e.g.*, Allianz Letter, *supra* note 54; American Bankers Letter, *supra* note 74; American Equity Letter, *supra* note 54; FBL Letter *supra* note 73; Maryland Letter, *supra* note 54; NAFA Letter, *supra* note 54; Letter of National Association of Health Underwriters (Sept. 10, 2008) (''Health Underwriters Letter''); National Western Letter, *supra* note 54; Letter of Vermont Department of Banking, Insurance, Securities and Health Care Administration (Nov. 17, 2008).

[82] *See, e.g.*, Allianz Letter, *supra* note 54; American Equity Letter, *supra* note 54; Aviva Letter, *supra* note 54; Coalition Letter, *supra* note 54; Maryland Letter, *supra* note 54; NAFA Letter, *supra* note 54; NAIFA Letter, *supra* note 54; National Western Letter, *supra* note 54; Old Mutual Letter, *supra* note 54; Sammons Letter, *supra* note 54.

[83] NAIC Suitability in Annuity Transactions Model Regulation (Model 275–1) (2003).

[84] National Association of Insurance Commissioners, Draft Model Summaries, available at: *http://www.naic.org/committees_models.htm.*

[85] *See, e.g.*, Letter A, *supra* note 76; American Bankers Letter, *supra* note 74; CAI 151A Letter, *supra* note 54; NAFA Letter, *supra* note 54; NAIC Officer Letter, *supra* note 54; NAIFA Letter, *supra* note 54.

[86] NAIC Annuity Disclorues Model Regulation (Model 245–1) (1998).

[87] *See, e.g.*, Aviva Letter, *supra* note 54; CAI 151A Letter, *supra* note 54; NAFA Letter, *supra* note 54; NAIC Officer Letter, *supra* note 54; NAIFA Letter, *supra* note 54.

[88] *See, e.g.*, American Equity Letter, *supra* note 54; Aviva Letter, *supra* note 54; Coalition Letter, *supra* note 54; Maryland Letter, *supra* note 54; NAIC Officer Letter, *supra* note 54; NAFA Letter, *supra* note 54.

[89] *See, e.g.*, Aviva Letter, *supra* note 54; Iowa Letter, *supra* note 74; NAIC Officer Letter, *supra* note 54.

[90] *See, e.g.*, Iowa Letter, *supra* note 74; NAIC Officer Letter, *supra* note 54.

[91] *See, e.g.*, NAIC Officer Letter, *supra* note 54.

[92] *See* Voss Letter, *supra* note 13 (proposing to accelerate NAIC efforts to strengthen the NAIC model laws affecting indexed annuity products and urge adoption by more of the member states).

[93] *See, e.g.*, Allianz Letter, *supra* note 54; American Equity Letter, *supra* note 54; Letter of R. Preston Pitts (Sept. 10, 2008) (''Pitts Letter''); Sammons Letter, *supra* note 54; Karlan Tucker, Tucker Advisory Group, Inc. (Sept. 10, 2008) (''Tucker Letter'').

[94] *See, e.g.*, Letter of American Council of Life Insurers (Sep. 19, 2008) (''ACLI Letter''); Allianz Letter, *supra* note 54; Aviva Letter, *supra* note 54; CAI 151A Letter, *supra* note 54; National Western Letter, *supra* note 54; Sammons Letter, *supra* note 54; Transamerica Letter, *supra* note 54.

complying with the federal securities laws, the Commission has not created specific disclosure requirements tailored to these products. This fact, though, is not relevant in determining whether indexed annuities are subject to the federal securities laws. The Commission has a long history of creating appropriate disclosure requirements for different types of securities, including securities issued by insurance companies, such as variable annuities and variable life insurance.[95] We note that we are providing a two-year transition period for rule 151A, and, during this period, we intend to consider how to tailor disclosure requirements for indexed annuities. We encourage indexed annuity issuers to work with the Commission during that period to address their concerns.

3. Definition

Scope of the Definition

Rule 151A will apply, as proposed, to a contract that is issued by a corporation subject to the supervision of the insurance commissioner, bank commissioner, or any agency or officer performing like functions, of any State or Territory of the United States or the District of Columbia.[96] This language is the same language used in Section 3(a)(8) of the Securities Act. Thus, the insurance companies covered by the rule are the same as those covered by Section 3(a)(8).

In addition, in order to be covered by the rule, a contract must be subject to regulation as an annuity under state insurance law.[97] The rule will not apply to contracts that are regulated under state insurance law as life insurance, health insurance, or any form of insurance other than an annuity, and it does not apply to any contract issued by an insurance company if the contract itself is not subject to regulation under state insurance law.[98] Thus, rule 151A itself will not apply to indexed life insurance policies,[99] in which the cash value of the policy is credited with a guaranteed minimum return and a securities-linked return. The status of an indexed life insurance policy under the federal securities laws will continue to be a facts and circumstances determination, undertaken by reference to the factors and analysis that have been articulated by the Supreme Court and the Commission. We note, however, that the considerations that form the basis for rule 151A are also relevant in analyzing indexed life insurance because indexed life insurance and indexed annuities share certain features (*e.g.*, securities-linked returns).

The adopted rule, like the proposed rule, expressly states that it does not apply to any contract whose value varies according to the investment experience of a separate account.[100] The effect of this provision is to eliminate variable annuities from the scope of the rule.[101] It has long been established that variable annuities are not entitled to the exemption under Section 3(a)(8) of the Securities Act, and, accordingly, the new definition does not cover them or affect their regulation in any way.[102]

Definition of ''Annuity Contract'' and ''Optional Annuity Contract''

We are adopting, with modifications to address commenters' concerns, the proposal that an annuity issued by an insurance company would not be an ''annuity contract'' or an ''optional annuity contract'' under Section 3(a)(8) of the Securities Act if the annuity has two characteristics. As adopted, those characteristics are as follows. First, the contract specifies that amounts payable by the insurance company under the contract are calculated at or after the end of one or more specified crediting periods, in whole or in part, by reference to the performance during the crediting period or periods of a security, including a group or index of securities.[103] Second, amounts payable by the insurance company under the contract are more likely than not to exceed the amounts guaranteed under the contract.[104]

Annuities Subject to Rule 151A

The first characteristic, as proposed and as adopted, is intended to describe indexed annuities, which are the subject of the rule. As proposed, this characteristic would simply have required that amounts payable by the insurance company under the contract are calculated, in whole or in part, by reference to the performance of a security, including a group or index of securities.[105] We have modified this characteristic to address the concern expressed by many commenters that, as proposed, the first characteristic was overly broad and would reach annuities that were not indexed annuities.[106] Commenters were concerned that the rule could, for example, be interpreted as extending to traditional fixed annuities, where amounts payable under the contract accumulate at a fixed interest rate, or to discretionary excess interest contracts, where amounts payable under the contract may include a discretionary excess interest component over and above the guaranteed minimum interest rate offered under the contract.[107] With both traditional fixed annuities and discretionary excess interest contracts, the interest rates are often based, at least in part, on the performance of the securities held by the insurer's general account.

The modified language of the first characteristic addresses commenters' concerns in three ways. First, the language requires that the contract itself specify that amounts payable by the insurance company are calculated by reference to the performance of a security. Thus, a contract will not be covered by the proposed rule unless the insurance company is contractually bound to pay amounts that are

[95] *See* Form N–4 [17 CFR 239.17b and 274.11c] (registration form for variable annuities); Form N–6 [17 CFR 239.17c and 274.11d] (registration form for variable life insurance).

[96] Rule 151A(a).

[97] *Id.* We note that the majority of states include in their insurance laws provisions that define annuities. See, *e.g.*, ALA. CODE § 27–5–3 (2008); CAL. INS. CODE § 1003 (West 2007); N.J. ADMIN. CODE tit. 11, § 4–2.2 (2008); N.Y. INS. LAW § 1113 (McKinney 2008). Those states that do not expressly define annuities typically have regulations in place that address annuities. *See, e.g.*, Iowa Admin. Code § 191–15.70 (5078) (2008); Kan. Admin. Regs. § 40–2–12 (2008); Minn. Stat. § 61B.20 (2007); Miss. Code Ann. § 83–1–151 (2008).

[98] One commenter was concerned that rule 151A might apply to a certain type of health insurance contract, where some portion of any favorable financial experience of the insurer is refunded to the insured.'' Letter of America's Health Insurance Plans (Sep. 10, 2008) (''AHIP Letter''). Rule 151A will not apply to contracts that are regulated under state insurance law as health insurance.

[99] *See, e.g.*, Aviva Letter, *supra* note 54; Sammons Letter, *supra* note 54 (requesting clarification that rule 151A does not apply to indexed life insurance policies).

[100] Rule 151A(d).

[101] The assets of a variable annuity are held in a separate account of the insurance company that is insulated for the benefit of the variable annuity owners from the liabilities of the insurance company, and amounts paid to the owner under a variable annuity vary according to the investment experience of the separate account. *See* Black and Skipper, *supra* note 39, at 174–77 (2000).

[102] *See, e.g., VALIC, supra* note 8, 359 U.S. 65; *United Benefit, supra* note 8, 387 U.S. 202. In addition, an insurance company separate account issuing variable annuities is an investment company under the Investment Company Act of 1940. *See Prudential Ins. Co. of Am.* v. *SEC,* 326 F.2d 383 (3d Cir. 1964).

[103] Rule 151A(a)(1).

[104] Rule 151A(a)(2).

[105] Proposed rule 151A(a)(1).

[106] *See, e.g.*, ACLI Letter, *supra* note 94; Allianz Letter, *supra* note 54; Aviva Letter, *supra* note 54; Letter of AXA Equitable Life Insurance Company (Sept. 10, 2008) (''AXA Equitable Letter''); Letter of Financial Services Institute (Sept. 10, 2008) (''FSI Letter''); CAI 151A Letter, *supra* note 54; Hartford Letter, *supra* note 55; NAFA Letter, *supra* note 54; NAIFA Letter, *supra* note 54; Letter of NAVA (Sept. 10, 2008) (''NAVA Letter''); Old Mutual Letter, *supra* note 54; Sammons Letter, *supra* note 54; Second Academy Letter, *supra* note 54; Transamerica Letter, *supra* note 54.

[107] *See, e.g.*, Letter of Association for Advanced Life Underwriting (Oct. 31, 2008); AXA Equitable Letter, *supra* note 106.

dependent upon the performance of a security. While an insurance company may, in fact, look to the performance of the securities in its general account in, for example, establishing the rate to be paid under a traditional fixed annuity, such a contract does not itself obligate the insurer to do so or undertake in any way that the purchaser will receive payments that are linked to the performance of any security. Second, the language requires that the amounts payable by the insurance company be calculated at or after the end of one or more specified crediting periods by reference to the performance during the crediting period of a security. That is, in order to be covered by the rule, an annuity contract must provide that the amount to be paid with respect to a crediting period is determined retrospectively, by reference to the performance during the period of a security. This retrospective determination of amounts to be paid is characteristic of indexed annuities and eliminates from the scope of the rule discretionary excess interest contracts, pursuant to which a specified interest rate may be established by reference to the past performance of a security or securities and applied on a prospective basis with respect to a future crediting period. Third, limiting the rule to contracts where the amount payable is determined retrospectively addresses the concerns of the commenters that the rule, as proposed, could reach annuity contracts covered by the rule 151 safe harbor.[108] As explained above, contracts where the amount payable is determined retrospectively do not fall within rule 151.[109]

Rule 151A, like the proposed rule, will apply whenever any amounts payable under the contract under any circumstances, including full or partial surrender, annuitization, or death, satisfy the first characteristic of the rule. If, for example, a contract specifies that the amount payable under a contract upon a full surrender is not calculated at or after the end of one or more specified crediting periods by reference to the performance during the period or periods of a security, but the amount payable upon annuitization is so calculated, then the contract would need to be analyzed under the rule. As another example, if a contract specifies that amounts payable under the contract are partly fixed in amount and partly dependent on the performance of a security in the manner specified by the rule, the contract would need to be analyzed under the rule.

We note that, like the proposal, rule 151A applies to contracts under which amounts payable are calculated by reference to the performance of a security, including a group or index of securities. Thus, the rule, by its terms, applies to indexed annuities but also to other similar annuities where the contract specifies that amounts payable are retrospectively calculated by reference to a single security or any group of securities.[110] The federal securities laws, and investors' interests in full and fair disclosure and sales practice protections, are equally implicated, whether amounts payable under an annuity are retrospectively calculated by reference to a securities index, another group of securities, or a single security.

The term ''security'' in rule 151A has the same broad meaning as in Section 2(a)(1) of the Securities Act. Rule 151A does not define the term ''security,'' and our existing rules provide that, unless otherwise specifically provided, the terms used in the rules and regulations under the Securities Act have the same meanings defined in the Act.[111]

''More Likely Than Not'' Test

The second characteristic sets forth the test that would define a class of indexed annuity contracts that are not ''annuity contracts'' or ''optional annuity contracts'' under the Securities Act and that, therefore, are not entitled to the Section 3(a)(8) exemption. As adopted, the second characteristic defines that class to include those contracts where the amounts payable by the insurance company under the contract are more likely than not to exceed the amounts guaranteed under the contract.

We are adopting the second characteristic as proposed. As explained above, by purchasing such an indexed annuity, the purchaser assumes the risk of an uncertain and fluctuating financial instrument, in exchange for exposure to future, securities-linked returns. As a result, the purchaser assumes many of the same risks that investors assume when investing in mutual funds, variable annuities, and other securities. The rule that we are adopting will provide the purchaser of such an annuity with the same protections that are provided under the federal securities laws to other investors who participate in the securities markets, including full and fair disclosure regarding the terms of the investment and the significant risks that he or she is assuming, as well as protections from abusive sales practices and the recommendation of unsuitable transactions. Some commenters raised concerns about the proposed rule's treatment of *de minimis* amounts of securities-linked returns.[112] These commenters suggested that the smaller the amount of securities-linked return, the less investment risk is assumed by the purchaser, and the more is assumed by the insurer. In particular, commenters suggested that where the securities-linked return is *de minimis* the purchaser does not assume the primary investment risk under the contract.[113] However, based on our current understanding, we believe that almost all current indexed annuity contracts provide for securities-linked returns that are more likely than not to exceed a *de minimis* amount in excess of the guaranteed return. Nevertheless, in the case of an indexed annuity contract that is more likely than not to provide only a *de minimis* securities-linked return in excess of the guaranteed return, the Commission and the staff would be prepared to consider a request for relief, if appropriate.

Under rule 151A, amounts payable by the insurance company under a contract will be more likely than not to exceed the amounts guaranteed under the contract if this is the expected outcome more than half the time. In order to determine whether this is the case, it will be necessary to analyze expected outcomes under various scenarios involving different facts and circumstances. In performing this analysis, the amounts payable by the insurance company under any particular set of facts and circumstances will be the amounts that the purchaser[114] would be entitled to receive from the insurer under those facts and circumstances. The facts and circumstances include, among other things, the particular features of the annuity contract (*e.g.*, the relevant index, participation rate, and other features), the particular options selected

[108] AXA Equitable Letter, *supra* note 106; Hartford Letter, *supra* note 55; ICI Letter, *supra* note 7; K&L Gates Letter, *supra* note 54.

[109] *See supra* note 38 and accompanying text.

[110] A commenter inquired whether an annuity product whose returns were indexed to the consumer price index, a real estate index, or a commodities index would be considered a security. Letter of Meaghan L. McFadden (Aug. 13, 2008). Rule 151A, by its terms, does not apply to such an annuity.

[111] 17 CFR 230.100(b).

[112] *See, e.g.*, CAI 151A Letter, *supra* note 54; National Western Letter, *supra* note 54; Sammons, *supra* note 54.

[113] *See, e.g.*, CAI 151A Letter, *supra* note 54; National Western Letter, *supra* note 54; Sammons, *supra* note 54.

[114] For simplicity, we are referring to payments to the purchaser. The rule, however, references payments by the insurer without reference to a specified payee. In performing the analysis, payments to any payee, including the purchaser, annuitant, and beneficiaries, must be included.

by the purchaser (*e.g.*, surrender or annuitization), and the performance of the relevant securities benchmark (*e.g.*, in the case of an indexed annuity, the performance of the relevant index, such as the Dow Jones Industrial Average, Lehman Brothers Aggregate U.S. Index, Nasdaq 100 Index, or Standard & Poor's 500 Composite Stock Price Index). The amounts guaranteed under a contract under any particular set of facts and circumstances will be the minimum amount that the insurer would be obligated to pay the purchaser under those facts and circumstances without reference to the performance of the security that is used in calculating amounts payable under the contract. Thus, if an indexed annuity, in all circumstances, guarantees that, on surrender, a purchaser will receive 87.5% of an initial purchase payment, plus 1% interest compounded annually, and that any additional payout will be based exclusively on the performance of a securities index, the amount guaranteed after 3 years will be 90.15% of the purchase payment (87.5% × 1.01 × 1.01 × 1.01).

Determining Whether an Annuity Is Not an ''Annuity Contract'' or ''Optional Annuity Contract'' Under Rule 151A

We are adopting, with modifications to address commenters' concerns, the provisions of proposed rule 151A that address the manner in which a determination will be made regarding whether amounts payable by the insurance company under a contract are more likely than not to exceed the amounts guaranteed under the contract. Rule 151A is principles-based, providing that a determination made by the insurer at or prior to issuance of a contract will be conclusive, provided that: (i) Both the insurer's methodology and the insurer's economic, actuarial, and other assumptions are reasonable; (ii) the insurer's computations are materially accurate; and (iii) the determination is made not earlier than six months prior to the date on which the form of contract is first offered.[115] We have eliminated the proposed requirement that the insurer's determination be made not more than three years prior to the date on which a particular contract is issued. The rule specifies the treatment of charges that are imposed at the time of payments under the contract by the insurer, and we have modified the proposal in order to provide for consistent treatment of these charges in computing both amounts payable by the insurance company and amounts guaranteed under the contract.[116]

We are adopting this principles-based approach because we believe that an insurance company should be able to evaluate anticipated outcomes under an annuity that it issues. We believe that many insurers routinely undertake similar analyses for purposes of pricing and valuing their contracts.[117] In addition, we believe that it is important to provide reasonable certainty to insurers with respect to the application of the rule and to preclude an insurer's determination from being second guessed, in litigation or otherwise, in light of actual events that may differ from assumptions that were reasonable when made.

As with all exemptions from the registration and prospectus delivery requirements of the Securities Act, the party claiming the benefit of the exemption—in this case, the insurer—bears the burden of proving that the exemption applies.[118] Thus, an insurer that believes an indexed annuity is entitled to the exemption under Section 3(a)(8) based, in part, on a determination made under the rule will—if challenged in litigation—be required to prove that its methodology and its economic, actuarial, and other assumptions were reasonable, and that the computations were materially accurate.

The rule provides that an insurer's determination under the rule will be conclusive only if it is made at or prior to issuance of the contract. Rule 151A is intended to provide certainty to both insurers and investors, and we believe that this certainty will be undermined unless insurance companies undertake the analysis required by the rule no later than the time that an annuity is issued. The rule also provides that, for an insurer's determination to be conclusive, the computations made by the insurance company in support of the determination must be materially accurate. An insurer should not be permitted to rely on a determination of an annuity's status under the rule that is based on computations that are materially inaccurate. For this purpose, we intend that computations will be considered to be materially accurate if any computational errors do not affect the outcome of the insurer's determination as to whether amounts payable by the insurer under the contract are more likely than not to exceed the amounts guaranteed under the contract.

In order for an insurer's determination to be conclusive, both the methodology and the economic, actuarial, and other assumptions used must be reasonable. We recognize that a range of methodologies and assumptions may be reasonable and that a reasonable methodology or assumption utilized by one insurer may differ from a reasonable assumption or methodology selected by another insurer. In determining whether an insurer's methodology is reasonable, it is appropriate to look to methods commonly used for pricing, valuing, and hedging similar products in insurance and derivatives markets.

An insurer will need to make assumptions in several areas, including assumptions about (i) insurer behavior, (ii) purchaser behavior, and (iii) market behavior, and will need to assign probabilities to various potential behaviors. With regard to insurer behavior, the insurer will need to make assumptions about discretionary actions that it may take under the terms of an annuity. In the case of an indexed annuity, for example, an insurer often has discretion to modify various features, such as guaranteed interest rates, caps, participation rates, and spreads. Similarly, the insurer will need to make assumptions concerning purchaser behavior, including matters such as how long purchasers will hold a contract, how they will allocate contract value among different investment options available under the contract, and the form in which they will take payments under the contract. Assumptions about market behavior will include assumptions about expected return, market volatility, and interest rates. In general, insurers will need to make assumptions about any feature of insurer, purchaser, or market behavior, or any other factor, that is

[115] Rule 151A(b)(2).

[116] Rule 151A(b)(1).

[117] *See generally* Black and Skipper, *supra* note 39, at 26–47, 890–99. Several commenters who issue indexed annuities disputed that insurers undertake these analyses. *See*, *e.g.*, American Equity Letter, *supra* note 54; National Western Letter, *supra* note 54; Sammons Letter, *supra* note 54. Other commenters, however, confirmed that these analytical methods exist and are used by insurers for internal purposes. *See*, *e.g.*, Aviva Letter, *supra* note 54; Academy Letter, *supra* note 54. We give substantial weight to the views of the American Academy of Actuaries (''Academy'') on this point, given their expertise in this type of analysis, and are not persuaded that the contrary comments of several issuers are representative of industry practice. See Black's Law Dictionary 39 (8th ed. 2004) (An actuary is a statistician who determines the present effects of future contingent events and who calculates insurance and pension rates on the basis of empirically based tables.); American Academy of Actuaries, Mission, available at: *http://www.actuary.org/mission.asp* (The mission of the Academy is to, among other things, provide independent and objective actuarial information, analysis, and education for the formation of sound public policy.).

[118] *See*, *e.g.*, SEC v. *Ralston Purina*, 346 U.S. 119, 126 (1953) (an issuer claiming an exemption under Section 4 of the Securities Act carries the burden of showing that the exemption applies).

material in determining the likelihood that amounts payable under the contract exceed the amounts guaranteed.

In determining whether assumptions are reasonable, insurers should generally be guided by both history and their own expectations about the future. An insurer may look to its own, and to industry, experience with similar or otherwise comparable contracts in constructing assumptions about both insurer behavior and investor behavior. In making assumptions about future market behavior, an insurer may be guided, for example, by historical market characteristics, such as historical returns and volatility, provided that the insurer bases its assumptions on an appropriate period of time and does not have reason to believe that the time period chosen is likely to be unrepresentative. As a general matter, assumptions about insurer, investor, or market behavior that are not consistent with historical experience would not be reasonable unless an insurer has a reasonable basis for any differences between historical experience and the assumptions used.

In addition, an insurer may look to its own expectations about the future in constructing reasonable assumptions. As noted above, insurers routinely analyze anticipated outcomes for purposes of pricing and valuing their contracts. We expect that, in making a determination under rule 151A, an insurer will use assumptions that are consistent with the assumptions that it uses for other purposes, such as pricing and valuation. In addition, an insurer generally should use assumptions that are consistent with its marketing materials. In general, assumptions that are inconsistent with the assumptions that an insurer uses for other purposes will not be reasonable under rule 151A.

As noted above, we are adopting a principles-based approach because we believe that it will provide reasonable certainty to insurers with respect to the application of the rule. We recognize, however, that a number of commenters expressed concern that the principles-based approach provides insufficient guidance regarding implementation and the methodologies and assumptions that are appropriate and could result in inconsistent determinations by different insurance companies and present enforcement and litigation risk.[119] Some commenters suggested that the Commission address these concerns by providing guidance as to how to make the determination under the rule, which, they asserted, could result in greater uniformity and consistency in the application of the rule.[120] While we believe that further guidance may, indeed, be helpful in response to specific questions of affected insurance companies, we note that commenters generally did not articulate with specificity the areas where they believe that further guidance is required. As a result, in order to provide guidance in the manner that would be most helpful, we encourage insurance companies, sellers of indexed annuities, and other affected parties to submit specific requests for guidance, which we will consider during the two-year period between adoption of rule 151A and its effectiveness.[121]

Like the proposal, rule 151A requires that, in order for an insurer's determination to be conclusive, the determination must be made not more than six months prior to the date on which the form of contract is first offered.[122] For example, if a form of contract were first offered on January 1, 2012, the insurer would be required to make the determination not earlier than July 1, 2011. We are not adopting the proposed requirement that the insurer's determination be made not more than three years prior to the date on which the particular contract is issued.[123] We were persuaded by the commenters that if the status of a form of contract under the federal securities laws were to change, over time, from exempt to non-exempt and vice versa, this would present practical difficulties resulting from the possibility that an annuity could be exempted from registration at one time but be required to be registered subsequently and vice versa, as well as heightened litigation and enforcement risk.[124] We believe that the substantial uncertainties and resulting potential costs introduced by the proposed requirement that a contract's status be redetermined every three years would be inconsistent with the intent of rule 151A, which is to clarify the status of indexed annuities.

Rule 151A, as adopted, requires that, in determining whether amounts payable by the insurance company are more likely than not to exceed the amounts guaranteed, both amounts payable and amounts guaranteed are to be determined by taking into account all charges under the contract, including, without limitation, charges that are imposed at the time that payments are made by the insurance company.[125] For example, surrender charges would be deducted from both amounts payable and amounts guaranteed under the contract. This is a change from the proposal, which would have required that, in determining whether amounts payable by the insurance company under a contract are more likely than not to exceed the amounts guaranteed under the contract, amounts payable be determined without reference to any charges that are imposed at the time of payment, such as surrender charges, while those charges would be reflected in computing the amounts guaranteed under the contract.[126]

We are making the foregoing change because we are persuaded by commenters who argued that the proposed provision could result in contracts being determined not to be entitled to the Section 3(a)(8) exemption irrespective of the likelihood of securities-linked return being included in the amount payable.[127] Specifically, commenters argued that as long as the surrender charge is in effect, the amount payable would always exceed the amount guaranteed if the surrender

[119] *See, e.g.*, Academy Letter, *supra* note 54; ACLI Letter, *supra* note 94; Aviva Letter, *supra* note 54; AXA Equitable Letter, *supra* note 106; CAI 151A Letter, *supra* note 54; FINRA Letter, *supra* note 7; Letter of Genesis Financial Products, Inc. (Aug. 29, 2008) (''Genesis Letter''); Letter of Janice Hart (Aug. 15, 2008) (''Hart Letter''); ICI Letter, *supra* note 7; National Western Letter, *supra* note 54; Sammons Letter, *supra* note 54.

[120] *See, e.g.*, FINRA Letter, *supra* note 7; Hart Letter, *supra* note 119; ICI Letter, *supra* note 7; NAIC Officer Letter, *supra* note 54.

[121] *See infra* text accompanying notes 129 and 130.

[122] Rule 151A(b)(2)(iii).

[123] Proposed rule 151A(b)(2)(C).

[124] *See, e.g.*, Aviva Letter, *supra* note 54; Sammons Letter, *supra* note 54. *See* also ICI Letter, *supra* note 7 (possibility that indexed annuity's status under the federal securities laws could change is not consistent with the purposes of the federal securities laws).

[125] Rule 151A(b)(1). In many cases, amounts guaranteed under annuities are not affected by charges imposed at the time payments are made by the insurer under the contract. This is a result of the fact that guaranteed minimum value, as commonly defined in indexed annuity contracts, equals a percentage of purchase payments, accumulated at a specified interest rate, as explained above, and this amount is not subject to surrender charges. However, under some indexed annuity contracts, the amounts guaranteed are affected by charges imposed at the time payments are made. For example, a purchaser buys a contract for $100,000. The contract defines surrender value as the greater of (i) purchase payments plus index-linked interest minus surrender charges or (ii) the guaranteed minimum value. The maximum surrender charge is equal to 10%. The guaranteed minimum value is defined in the contract as 87.5% of premium accumulated at 1% annual interest. If the purchaser surrenders within the first year of purchase, and there is no index-linked interest credited, the surrender value would equal $90,000 (determined under clause (i) as $100,000 purchase payment minus 10% surrender charge), and this amount would be the guaranteed amount under the contract, not the lower amount defined in the contract as guaranteed minimum value ($87,500).

[126] Proposed rule 151A(b)(1).

[127] *See, e.g.*, Aviva Letter, *supra* note 54; CAI 151A Letter, *supra* note 54; Coalition Letter, *supra* note 54.

charge were subtracted from the latter but not the former. The commenters further argued that bona fide surrender charges should not result in a contract being deemed a security, since a surrender charge is an expense and does not represent a transfer of risk from insurer to contract purchaser. Because the rule, as adopted, requires surrender charges to be subtracted from both amounts payable and amounts guaranteed, the surrender charges will not affect the determination of whether a contract is a security (*i.e.*, the determination of whether amounts payable are more likely than not to exceed the amounts guaranteed).

Effective Date

The effective date of rule 151A is January 12, 2011. We originally proposed that rule 151A, if adopted, would be effective 12 months after publication in the **Federal Register**. We are persuaded by commenters, however, that additional time is required for, among other things, making the determinations required by the rule, preparing registration statements for indexed annuities that are required to be registered, and establishing the needed infrastructure for distributing registered indexed annuities.[128] Based on the comments, we believe that a January 12, 2011 effective date will provide the time needed to accomplish these tasks.[129] We note that, during this period, the Commission intends to consider how to tailor disclosure requirements for indexed annuities and will also consider any requests for additional guidance that we receive concerning the determinations required under rule 151A.[130]

The new definition in rule 151A will apply prospectively as we proposed—that is, only to indexed annuities issued on or after January 12, 2011. We are using our definitional rulemaking authority under Section 19(a) of the Securities Act, and the explicitly prospective nature of our rule is consistent with similar prospective rulemaking that we have undertaken in the past when doing so was appropriate and fair under the circumstances.[131]

We are aware that many insurance companies and sellers of indexed annuities, such as insurance agents, broker-dealers, and registered representatives of broker-dealers, in the absence of definitive interpretation or definition by the Commission, have of necessity acted in reliance on their own analysis of the legal status of indexed annuities based on the state of the law prior to this rulemaking. Under these circumstances, we do not believe that issuers and sellers of indexed annuities should be subject to any additional legal risk relating to their past offers and sales of indexed annuity contracts as a result of the proposal and adoption of rule 151A.[132]

Several commenters requested clarification of the statement that rule 151A will apply prospectively to indexed annuities issued on or after the rule's effective date (*i.e.*, January 12, 2011).[133] As a result, we are clarifying that if an indexed annuity has been issued to a particular individual purchaser prior to January 12, 2011, then that specific contract between that individual and the insurance company (including any additional purchase payments made under the contract on or after January 12, 2011) is not subject to rule 151A, and its status under the federal securities laws is to be determined under the law as it existed without reference to rule 151A. By contrast, if an indexed annuity is issued to a particular individual purchaser on or after January 12, 2011, then that specific contract between that individual and the insurance company is subject to rule 151A, even if the same form of indexed annuity was offered and sold prior to January 12, 2011, and even if the individual contract issued on or after January 12, 2011, is issued under a group contract that was in place prior to January 12, 2011.

The Commission believes that permitting new sales of an existing form of contract (as opposed to additional purchase payments made under a specific existing contract between an individual and an insurance company) after the rule's effective date without reference to the rule is contrary to the purpose of the rule. If the rule were not applicable to all contracts issued on or after the effective date without regard to when the forms of the contracts were originally sold, then two substantially similar contracts could be sold after the effective date, one not subject to the rule and one subject to the rule, even though they present the same level of risk to the purchaser and present the same need for investor protection. The fact that one was designed and released into the marketplace prior to January 12, 2011, and the other was designed and released into the marketplace after that date should not be a determining factor as to the availability of the protections of the federal securities laws. We note that, because we have extended the effective date to January 12, 2011, insurers should have adequate time to prepare for compliance with rule 151A.

Some commenters raised concerns that the registration of an indexed annuity as required by rule 151A could cause offers and sales of the same annuity that occurred on an unregistered basis after adoption but prior to the effective date of the rule, January 12, 2011, to be unlawful under Section 5 of the Securities Act.[134]

We reiterate that nothing in this adopting release is intended to affect the current analysis of the legal status of indexed annuities until the effective date of rule 151A. Therefore, after the adoption of rule 151A but prior to the effective date of the rule:

- An indexed annuity issuer making unregistered offers and sales of a contract that will not be an ''annuity contract'' or ''optional annuity contract'' under rule 151A may continue to do so until the effective date of rule 151A without such offers and sales being

[128] Letter of American International Group (Sept. 10, 2008) (''AIG Letter''); Aviva Letter, *supra* note 54; CAI 151A Letter, *supra* note 54; NAVA Letter, *supra* note 106; Letter of New York Life Insurance Company (Sept. 18, 2008) (''NY Life Letter''); Sammons Letter, *supra* note 54.

[129] AIG Letter, *supra* note 128 (recommending transition period of 2 years); Aviva Letter, *supra* note 54 (at least 24 months); CAI 151A Letter, *supra* note 54 (24 months); Letter of NAVA (Nov. 17, 2008) (''Second NAVA Letter'') (at least 24 months); NY Life Letter, *supra* note 128 (at least 24 months).

[130] *See supra* text accompanying notes 95 and 121.

[131] *See, e.g.*, Securities Act Release No. 4896 (Feb. 1, 1968) [33 FR 3142, 3143 (Feb. 17, 1968)] (''The Commission is aware that for many years issuers of the securities identified in this rule have not considered their obligations to be separate securities and that they have acted in reliance on the view, which they believed to be the view of the Commission, that registration under the Securities Act was not required. Under the circumstances, the Commission does not believe that such issuers are subject to any penalty or other damages resulting from entering into such arrangements in the past. Paragraph (b) provides that the rule shall apply to transactions of the character described in paragraph (a) only with respect to bonds or other evidence of indebtedness issued after adoption of the rule.''). *See also* Securities Act Release No. 5316 (Oct. 6, 1972) [37 FR 23631, 23632 (Nov. 7, 1972)] (''The Commission recognizes that the 'no-sale' concept has been in existence in one form or another for a long period of time. * * * The Commission believes, after a thorough reexamination of the studies and proposals cited above, that the interpretation embodied in Rule 133 is no longer consistent with the statutory objectives of the [Securities] Act. * * * Rule 133 is rescinded prospectively on and after January 1, 1973. * * *'').

[132] *See* FSI Letter, *supra* note 106 (asking for clarification that, like insurance company issuers, independent broker-dealers and their affiliated financial advisers are not subject to any additional legal risk relating to past offers and sales of indexed annuities as a result of rule 151A).

[133] *See, e.g.*, AIG Letter, *supra* note 128; Hartford Letter, *supra* note 55; Letter of North American Securities Administrators Association (Sept. 10, 2008) (''NASAA Letter'').

[134] *See, e.g.*, Aviva Letter, *supra* note 54; CAI 151A Letter, *supra* note 54; Sammons Letter, *supra* note 54.

unlawful under Section 5 of the Securities Act as a result of the pending effectiveness of rule 151A; and

• An indexed annuity issuer that wishes to register a contract that will not be an ''annuity contract'' or ''optional annuity contract'' under rule 151A may continue to make unregistered offers and sales of the same annuity until the earlier of the effective date of the registration statement or the effective date of the rule without such offers and sales being unlawful under Section 5 of the Securities Act as a result of the pending effectiveness of rule 151A.

Annuities Not Covered by the Definition

Rule 151A applies to annuities where the contract specifies that amounts payable by the insurance company under the contract are calculated at or after the end of one or more specified crediting periods, in whole or in part, by reference to the performance during the crediting period or periods of a security, including a group or index of securities. The rule defines certain of those annuities (annuities under which amounts payable by the issuer are more likely than not to exceed the amounts guaranteed under the contract) as not ''annuity contracts'' or ''optional annuity contracts'' under Section 3(a)(8) of the Securities Act. The rule, however, does not provide a safe harbor under Section 3(a)(8) for any other annuities, including any other indexed annuities. The status under the Securities Act of any annuity, other than an annuity that is determined under rule 151A to be not an ''annuity contract'' or ''optional annuity contract,'' continues to be determined by reference to the investment risk and marketing tests articulated in existing case law under Section 3(a)(8) and, to the extent applicable, the Commission's safe harbor rule 151.[135]

Some commenters suggested that the Commission, instead of adopting a rule that defines certain indexed annuities as not being ''annuity contracts'' under Section 3(a)(8), should instead define a safe harbor that would provide that indexed annuities that meet certain conditions are entitled to the Section 3(a)(8) exemption.[136] We are not adopting this approach for two reasons. First, such a rule would not address in any way the federal interest in providing investors with disclosure, antifraud, and sales practice protections that arise when individuals are offered indexed annuities that expose them to investment risk. A safe harbor would address circumstances where purchasers of indexed annuities are not entitled to the protections of the federal securities laws; one of our primary goals is to address circumstances where purchasers of indexed annuities are entitled to the protections of the federal securities laws. We are concerned that many purchasers of indexed annuities today should be receiving the protections of the federal securities laws, but are not. Rule 151A addresses this problem; a safe harbor rule would not. Second, we believe that, under many of the indexed annuities that are sold today, the purchaser bears significant investment risk and is more likely than not to receive a fluctuating, securities-linked return. In light of that fact, we believe that is far more important to address this class of contracts with our definitional rule than to address the remaining contracts, or some subset of those contracts, with a safe harbor rule.

B. Exchange Act Exemption for Securities That Are Regulated as Insurance

The Commission is also adopting new rule 12h–7 under the Exchange Act, which provides an insurance company with an exemption from Exchange Act reporting with respect to indexed annuities and certain other securities issued by the company that are registered under the Securities Act and regulated as insurance under state law.[137] Sixteen commenters supported the exemption.[138] No commenters opposed the exemption. We are adopting this exemption, with changes to the proposal that address commenters' concerns, because we believe that the exemption is necessary or appropriate in the public interest and consistent with the protection of investors. We base that view on two factors: first, the nature and extent of the activities of insurance company issuers, and their income and assets, and, in particular, the regulation of those activities and assets under state insurance law; and, second, the absence of trading interest in the securities.[139] The new rule imposes conditions to the exemption that relate to these factors and that we believe are necessary or appropriate in the public interest and consistent with the protection of investors.

State insurance regulation is focused on insurance company solvency and the adequacy of insurers' reserves, with the ultimate purpose of ensuring that insurance companies are financially secure enough to meet their contractual obligations.[140] State insurance regulators require insurance companies to maintain certain levels of capital, surplus, and risk-based capital; restrict the investments in insurers' general accounts; limit the amount of risk that may be assumed by insurers; and impose requirements with regard to valuation of insurers' investments.[141] Insurance companies are required to file annual reports on their financial condition with state insurance regulators. In addition, insurance companies are subject to periodic examination of their financial condition by state insurance regulators. State insurance regulators also preside over the conservation or liquidation of companies with inadequate solvency.[142]

State insurance regulation, like Exchange Act reporting, relates to an entity's financial condition. We are of the view that, in appropriate circumstances, it may be unnecessary for both to apply in the same situation, which may result in duplicative regulation that is burdensome. Through Exchange Act reporting, issuers periodically disclose their financial condition, which enables investors and the markets to independently evaluate an issuer's income, assets, and balance sheet. State insurance regulation takes a different approach to the issue of financial condition, instead relying on

[135] As noted in Part II.B., above, indexed annuities are not entitled to rely on the rule 151 safe harbor.

[136] *See, e.g.,* Academy Letter, *supra* note 54; AIG Letter, *supra* note 128; Aviva Letter, *supra* note 54; Second Academy Letter, *supra* note 54; Second Aviva Letter, *supra* note 54; Second Transamerica Letter, *supra* note 54; Letter of Life Insurance Company of the Southwest (Sept. 10, 2008) (''Southwest Letter''); Voss Letter, *supra* note 13.

[137] The Commission received a petition requesting that we propose a rule that would exempt issuers of certain types of insurance contracts from Exchange Act reporting requirements. Letter from Stephen E. Roth, Sutherland Asbill & Brennan LLP, on behalf of Jackson National Life Insurance Co., to Nancy M. Morris, Secretary, U.S. Securities and Exchange Commission (Dec. 19, 2007) (File No. 4–553) available at: *http://www.sec.gov/rules/petitions/2007/petn4-553.pdf.*

[138] *See, e.g.,* ACLI Letter, *supra* note 94; Allianz Letter, *supra* note 54; AXA Equitable Letter, *supra* note 106; Letter of Committee of Annuity Insurers regarding proposed rule 12h–7 (Sept. 10, 2008) (''CAI 12h–7 Letter''); FSI Letter, *supra* note 106; Letter of Great-West Life & Annuity Insurance Company (Sept. 10, 2008) (''Great-West Letter''); ICI Letter, *supra* note 7; Letter of MetLife, Inc. (Sept. 11, 2008) (''MetLife Letter''); NAVA Letter, *supra* note 106; Sammons Letter, *supra* note 54.

[139] *See* Section 12(h) of the Exchange Act [15 U.S.C. 78*l*(h)] (Commission may, by rules, exempt any class of issuers from the reporting provisions of the Exchange Act ''if the Commission finds, by reason of the number of public investors, *amount of trading interest in the securities, the nature and extent of the activities of the issuer, income or assets of the issuer,* or otherwise, that such action is not inconsistent with the public interest or the protection of investors.'') (emphasis added).

[140] Black and Skipper, *supra* note 39, at 949.

[141] *Id.* at 949 and 956–59.

[142] *Id.* at 949.

state insurance regulators to supervise insurers' financial condition, with the goal that insurance companies be financially able to meet their contractual obligations. We believe that it is consistent with our federal system of regulation, which has allocated the responsibility for oversight of insurers' solvency to state insurance regulators, to exempt insurers from Exchange Act reporting with respect to state-regulated insurance contracts. Commenters asserted that, in light of the protections available under state insurance regulation, periodic reporting under the Exchange Act by state-regulated insurers does not enhance investor protection with respect to the securities covered under the rule.[143]

Our conclusion is strengthened by the general absence of trading interest in insurance contracts. Insurance is typically purchased directly from an insurance company. While insurance contracts may be assigned in some circumstances, they typically are not listed or traded on securities exchanges or in other markets. As a result, outside the context of publicly owned insurance companies, there is little, if any, market interest in the information that is required to be disclosed in Exchange Act reports.

1. The Exemption

Rule 12h–7 provides an insurance company that is covered by the rule with an exemption from the duty under Section 15(d) of the Exchange Act to file reports required by Section 13(a) of the Exchange Act with respect to certain securities registered under the Securities Act.[144]

Covered Insurance Companies

The Exchange Act exemption applies to an issuer that is a corporation subject to the supervision of the insurance commissioner, bank commissioner, or any agency or officer performing like functions, of any state, including the District of Columbia, Puerto Rico, the Virgin Islands, and any other possession of the United States.[145] In the case of a variable annuity contract or variable life insurance policy, the exemption applies to the insurance company that issues the contract or policy. However, the exemption does not apply to the insurance company separate account in which the purchaser's payments are invested and which is separately registered as an investment company under the Investment Company Act of 1940 and is not regulated as an insurance company under state law.[146]

Covered Securities

The exemption applies with respect to securities that do not constitute an equity interest in the insurance company issuer and that are either subject to regulation under the insurance laws of the domiciliary state of the insurance company or are guarantees of securities that are subject to regulation under the insurance laws of that jurisdiction.[147] The exemption does not apply with respect to any other securities issued by an insurance company. As a result, if an insurance company issues securities with respect to which the exemption applies, and other securities that do not entitle the insurer to the exemption, the insurer will remain subject to Exchange Act reporting obligations. For example, if an insurer that is a publicly held stock company[148] also issues insurance contracts that are registered securities under the Securities Act, the insurer generally would be required to file Exchange Act reports as a result of being a publicly held stock company. Similarly, if an insurer raises capital through a debt offering, the exemption does not apply with respect to the debt securities.

The exemption is available with respect to securities that are either subject to regulation under the insurance laws of the domiciliary state of the insurance company or are guarantees of securities that are subject to regulation under the insurance laws of that jurisdiction.[149] Rule 12h–7 is a broad exemption that applies to any contract that is regulated under the insurance laws of the insurer's home state because we intend that the exemption apply to all contracts, and only those contracts, where state insurance law, and the associated regulation of insurer financial condition, applies. A key basis for the exemption is that investors are already entitled to the financial condition protections of state law and that, under our federal system of regulation, Exchange Act reporting may be unnecessary. Therefore, we believe it is important that the reach of the exemption and the reach of state insurance law be the same. A single commenter addressed the scope of securities with respect to which the proposed exemption would apply, supporting the Commission's approach and noting that limiting the exemption to enumerated types of securities would require the Commission to revisit the rule every few years, or would provide a significant barrier to the introduction of new investment products.[150]

The Exchange Act exemption applies both to certain existing types of insurance contracts and to types of contracts that are developed in the future and that are registered as securities under the Securities Act. The exemption applies to indexed annuities that are registered under the Securities Act. However, the Exchange Act exemption is independent of rule 151A and applies to types of contracts in addition to those that are covered by rule 151A. There are at least two types of existing insurance contracts with respect to which the Exchange Act exemption applies, contracts with so-called ''market value adjustment'' (''MVA'') features and insurance contracts that provide certain

[143] CAI 12h–7 Letter, *supra* note 138; ICI Letter, *supra* note 7; MetLife Letter, *supra* note 138.

[144] Introductory paragraph to rule 12h–7. *Cf.* Rule 12h–3(a) under the Exchange Act [17 CFR 240.12h–3(a)] (suspension of duty under Section 15(d) of the Exchange Act to file reports with respect to classes of securities held by 500 persons or less where total assets of the issuer have not exceeded $10,000,000); Rule 12h–4 under the Exchange Act [17 CFR 240.12h–4] (exemption from duty under Section 15(d) of the Exchange Act to file reports with respect to securities registered on specified Securities Act forms relating to certain Canadian issuers).

Section 15(d) of the Exchange Act requires each issuer that has filed a registration statement that has become effective under the Securities Act to file reports and other information and documents required under Section 13 of the Exchange Act [15 U.S.C. 78m] with respect to issuers registered under Section 12 of the Exchange Act [15 U.S.C. 78*l*]. Section 13(a) of the Exchange Act [15 U.S.C. 78m(a)] requires issuers of securities registered under Section 12 of the Act to file annual reports and other documents and information required by Commission rule.

[145] Rule 12h–7(a). The Exchange Act defines ''State'' as any state of the United States, the District of Columbia, Puerto Rico, the Virgin Islands, or any other possession of the United States. Section 3(a)(16) of the Exchange Act [15 U.S.C. 78c(a)(16)]. The term ''State'' in rule 12h–7 has the same meaning as in the Exchange Act. Rule 12h–7 does not define the term ''State,'' and our existing rules provide that, unless otherwise specifically provided, the terms used in the rules and regulations under the Exchange Act have the same meanings defined in the Exchange Act. *See* rule 240.0–1(b) [17 CFR 240.0–1(b)].

[146] The separate account's Exchange Act reporting requirements are deemed to be satisfied by filing annual reports on Form N–SAR. 17 CFR 274.101. *See* Section 30(d) of the Investment Company Act [15 U.S.C. 80a–30(d)] and rule 30a–1 under the Investment Company Act [17 CFR 270.30a–1].

[147] Rule 12h–7(a)(2).

[148] A stock life insurance company is a corporation authorized to sell life insurance, which is owned by stockholders and is formed for the purpose of earning a profit for its stockholders. This is in contrast to another prevailing insurance company structure, the mutual life insurance company. In this structure, the corporation authorized to sell life insurance is owned by and operated for the benefit of its policy owners. Black and Skipper, *supra* note 39, at 577–78.

[149] A domiciliary state is the jurisdiction in which an insurer is incorporated or organized. *See* National Association of Insurance Commissioners Model Laws, Regulations and Guidelines 555–1, § 104 (2007).

[150] Great-West Letter, *supra* note 138.

guaranteed benefits in connection with assets held in an investor's account, such as a mutual fund, brokerage, or investment advisory account.

Contracts including MVA features have, for some time, been registered under the Securities Act.[151] Insurance companies issuing contracts with these features have also complied with Exchange Act reporting requirements.[152] MVA features have historically been associated with annuity and life insurance contracts that guarantee a specified rate of return to purchasers.[153] In order to protect the insurer against the risk that a purchaser may make withdrawals from the contract at a time when the market value of the insurer's assets that support the contract has declined due to rising interest rates, insurers sometimes impose an MVA upon surrender. Under an MVA feature, the insurer adjusts the proceeds a purchaser receives upon surrender prior to the end of the guarantee period to reflect changes in the market value of its portfolio securities supporting the contract.[154]

More recently, some insurance companies have registered under the Securities Act insurance contracts that provide certain guarantees in connection with assets held in an investor's account, such as a mutual fund, brokerage, or investment advisory account.[155] As a result, the insurers become subject to Exchange Act reporting requirements if they are not already subject to those requirements. These contracts, often called ''guaranteed living benefits,'' are intended to provide insurance to the purchaser against the risk of outliving the assets held in the mutual fund, brokerage, or investment advisory account.[156]

As noted above, the Exchange Act exemption also applies with respect to a guarantee of a security if the guaranteed security is subject to regulation under state insurance law.[157] We are adopting this provision because we believe that it is appropriate to exempt from Exchange Act reporting an insurer that provides a guarantee of an insurance contract (that is also a security) when the insurer would not be subject to Exchange Act reporting if it had issued the guaranteed contract. This situation may arise, for example, when an insurance company issues a contract that is a security and its affiliate, also an insurance company, provides a guarantee of benefits provided under the first company's contract.[158]

Finally, the exemption is not available with respect to any security that constitutes an equity interest in the issuing insurance company. As a general matter, an equity interest in an insurer is not covered by the exemption because it is not subject to regulation under state insurance law and often is publicly traded. Nonetheless, we believe that the rule should expressly preclude any security that constitutes an equity interest in the issuing insurance company from being covered by the exemption. Where investors own an equity interest in an issuing insurance company, and are therefore dependent on the financial condition of the issuer for the value of that interest, we believe that they have a significant interest in directly evaluating the issuers' financial condition for themselves on an ongoing basis and that Exchange Act reporting is appropriate.

2. Conditions to Exemption

As described above, we believe that the exemption is necessary or appropriate in the public interest and consistent with the protection of investors because of the existence of state regulation of insurers' financial condition and because of the general absence of trading interest in insurance contracts. The Exchange Act exemption that we are adopting, like the proposal, is subject to conditions that are designed to ensure that both of these factors are, in fact, present in cases where an insurance company is permitted to rely on the exemption. We have modified the conditions related to trading interest in one respect to address the concerns of commenters. We have also added a condition to the proposed rule in order to address a commenter's concern.

Regulation of Insurer's Financial Condition

In order to rely on the exemption, an insurer must file an annual statement of its financial condition with, and the insurer must be supervised and its financial condition examined periodically by, the insurance commissioner, bank commissioner, or any agency or any officer performing like functions, of the insurer's domiciliary state.[159] Commenters did not address this condition, and we are adopting this condition as proposed. This condition is intended to ensure that an insurer claiming the exemption is, in fact, subject to state insurance regulation of its financial condition. Absent satisfaction of this condition, Exchange Act reporting would not be duplicative of state insurance regulation, and the exemption would not be available.

Absence of Trading Interest

The Exchange Act exemption is subject to two conditions intended to insure that there is no trading interest in securities with respect to which the exemption applies, and we are modifying the proposed conditions in one respect to address the concerns of commenters. First, the securities may not be listed, traded, or quoted on an exchange, alternative trading system,[160] inter-dealer quotation system,[161] electronic communications network, or any other similar system, network, or publication for trading or quoting.[162] This condition is designed to ensure that there is no established trading market for the securities. Second, the issuing insurance company must take steps reasonably designed to ensure that a trading market for the securities does

[151] Securities Act Release No. 6645, *supra* note 35, 51 FR at 20256–58.

[152] *See, e.g.,* ING Life Insurance and Annuity Company (Annual Report on Form 10–K (Mar. 31, 2008)); Protective Life Insurance Company (Annual Report on Form 10–K (Mar. 31, 2008)); Union Security Insurance Company (Annual Report on Form 10–K (Mar. 3, 2008)).

[153] Some indexed annuities also include MVA features. *See, e.g.,* Pre-Effective Amendment No. 4 to Registration Statement on Form S–1 of PHL Variable Insurance Company (File No. 333–132399) (filed Feb. 7, 2007); Initial Registration Statement on Form S–1 of ING USA Annuity and Life Insurance Company (File No. 333–133153) (filed Apr. 7, 2006); Pre-Effective Amendment No. 2 to Registration Statement on Form S–3 of Allstate Life Insurance Company (File No. 333–117685) (filed Dec. 20, 2004).

[154] See Proposing Release, *supra* note 3, 73 FR at 37764 (describing MVA features).

[155] *See, e.g.,* PHL Variable Life Insurance Company, File No. 333–137802 (Form S–1 filed Feb. 25, 2008); Genworth Life and Annuity Insurance Company, File No. 333–143494 (Form S–1 filed Apr. 4, 2008).

[156] *See* Proposing Release, *supra* note 3, 73 FR at 37764 (describing guaranteed living benefits).

[157] The Securities Act defines ''security'' in Section 2(a)(1) of the Act [15 U.S.C. 77b(a)(1)]. That definition provides that a guarantee of any of the instruments included in the definition is also a security.

[158] For example, an insurance company may offer a registered variable annuity, and a parent or other affiliate of the issuing insurance company may act as guarantor for the issuing company's insurance obligations under the contract.

[159] Rule 12h–7(c). *Cf.* Section 26(f)(2)(B)(ii) and (iii) of the Investment Company Act [15 U.S.C. 80a–26(f)(2)(B)(ii) and (iii)] (using similar language in requirements that apply to insurance companies that sell variable insurance products).

[160] For this purpose, ''alternative trading system'' would have the same meaning as in Regulation ATS. *See* 17 CFR 242.300(a) (definition of ''alternative trading system'').

[161] For this purpose, ''inter-dealer quotation system'' would have the same meaning as in Exchange Act rule 15c2–11. *See* 17 CFR 240.15c2–11(e)(2) (definition of ''inter-dealer quotation system'').

[162] Rule 12h–7(d).

not develop.[163] This includes, except to the extent prohibited by the law of any state, including the District of Columbia, Puerto Rico, the Virgin Islands, and any other possession of the United States,[164] or by action of the insurance commissioner, bank commissioner, or any agency or officer performing like functions of any state, requiring written notice to, and acceptance by, the issuer prior to any assignment or other transfer of the securities and reserving the right to refuse assignments or other transfers at any time on a non-discriminatory basis. This condition is designed to ensure that the insurer takes reasonable steps to ensure the absence of trading interest in the securities.

We are adopting the first condition, relating to the absence of listing, trading, and quoting on any exchange or similar system, network, or publication for trading or quoting, as proposed. We are not adopting the suggestion of a commenter that the Commission limit this condition to exchanges and other similar systems, networks, and publications for trading or quoting that are registered with, or regulated by, the Commission or a self-regulatory organization.[165] The commenter argued that, absent this limitation, insurance companies would be placed in the position of enforcing the Commission's requirements by identifying any exchanges and other similar systems, networks, and publications for trading or quoting that may arise from time to time and operate in violation of the Commission's rules and regulations. We disagree that this limitation is appropriate. We have determined that the exemption provided by rule 12h–7 is necessary or appropriate in the public interest and consistent with the protection of investors, in part, because of the absence of trading interest in the insurance contracts covered by the exemption. We do not believe that there would be an absence of trading interest where an insurance contract trades on an exchange or similar system, network, or publication for trading or quoting, whether regulated by the Commission or not.

We are modifying the second condition, which requires the issuing insurance company to take steps reasonably designed to ensure that a trading market for the securities does not develop. As the condition was proposed, this would have included requiring written notice to, and acceptance by, the insurance company prior to any assignment or transfer of the securities and reserving the right to refuse assignments or other transfers of the securities at any time on a non-discriminatory basis.[166] Under the adopted rule, these particular steps will continue to be required, except to the extent that they are prohibited by the law of any state or by action of the insurance commissioner, bank commissioner, or any agency or officer performing like functions of any state.

This modification addresses the concern expressed by several commenters that the proposed condition could, in some circumstances, be inconsistent with applicable state law.[167] The commenters stated that some states may not permit restrictions on transfers or assignments and, indeed, that some states specifically grant contract owners the right to transfer or assign their contracts. In proposing the condition relating to restrictions on assignment, it was not our intent to require restrictions that are inconsistent with applicable state law. Our modification to rule 12h–7 clarifies this and, accordingly, addresses the commenters' concern.

Three commenters requested that the second condition be removed in its entirety.[168] These commenters stated that the second condition is unnecessary, because the first should give sufficient comfort that a trading market will not arise. The commenters also stated that this condition would be difficult to apply. One of the commenters stated that the condition is ambiguous, and that there is no clear definition of ''trading market'' in the federal securities laws.[169] We continue to believe that the second condition is important because it will ensure that the issuer takes steps reasonably designed to preclude the development of a trading market. We do not believe that, as modified to address concerns about inconsistency with state law, the second condition will be unduly difficult to apply.

Two commenters requested that rule 12h–7 include a transition period for filing required reports under the Exchange Act for any insurance company previously relying on the rule that no longer meets its conditions.[170] We do not believe that it would be appropriate to include such a transition period because, if an insurer no longer meets the conditions, this generally would mean that either the securities are not regulated as insurance under state law or the securities are traded or may become traded. In such a case, the very basis on which we are granting the exemption would no longer exist. Therefore, we have determined not to include such a transition period in rule 12h–7. If an issuer no longer meets the conditions of the rule, it will immediately become subject to the filing requirements of the Exchange Act. We would, in any event, expect situations where an insurance company ceases to meet the conditions of rule 12h–7 to be extremely rare. In such a case, at an insurer's request, we would consider, based on the particular facts and circumstances, whether individual exemptive relief to provide for a transition period would be appropriate.

Prospectus Disclosure

We are adding a condition to proposed rule 12h–7 to require that, in order for an insurer to be entitled to the Exchange Act exemption provided by the rule with respect to securities, the prospectus for the securities must contain a statement indicating that the issuer is relying on the exemption provided by the rule.[171] This addresses a commenter's request that the Commission clarify that reliance on the exemption is optional because some insurers may conclude that the benefits that flow from the ability to incorporate by reference Exchange Act reports may outweigh any costs associated with filing those reports.[172] The new condition will permit an insurance company that desires to remain subject to Exchange Act reporting requirements to do so by omitting the required statement from its prospectus. The new provision also has the advantage of providing notice to investors of an insurer's reliance on the exemption. An insurer who does not include this statement will be subject to mandatory Exchange Act reporting.[173]

[163] Rule 12h–7(e).

[164] *See supra* note 145 for a discussion of the term ''State'' as used in rule 12h–7.

[165] CAI 12h–7 Letter, *supra* note 138.

[166] Proposed rule 12h–7(e).

[167] Allianz Letter, *supra* note 54; CAI 12h–7 Letter, *supra* note 138; ICI Letter, *supra* note 7; NAVA, *supra* note 106; Sammons Letter, *supra* note 54.

[168] CAI 12h–7 Letter, *supra* note 138; Sammons Letter, *supra* note 54; Transamerica Letter, *supra* note 54; Second Transamerica Letter, *supra* note 54.

[169] CAI 12h–7 Letter, *supra* note 138.

[170] Letter of Committee of Annuity Insurers regarding proposed rule 12h–7 (Nov. 17, 2008) (''Second CAI 12h–7 Letter''); Second Transamerica Letter, *supra* note 54.

[171] Rule 12h–7(f).

[172] CAI 12h–7 Letter, *supra* note 138. *See* Form S–1, General Instruction VII.A. (incorporation by reference permitted only if, among other things, registrant subject to Exchange Act reporting requirements); Form S–3, General Instruction I.A.2. (Form S–3, which permits incorporation by reference, available to registrant that, among other things, is required to file Exchange Act reports).

[173] As described above, the exemption applies to an insurance company that issues a variable annuity contract or variable life insurance policy,

Continued

3. Effective Date

The effective date of rule 12h–7 is May 1, 2009.

IV. Paperwork Reduction Act

A. Background

Rule 151A contains no new ''collection of information'' requirements within the meaning of the Paperwork Reduction Act of 1995 (''PRA'').[174] However, we believe that rule 151A will result in an increase in the disclosure burden associated with existing Form S–1 as a result of additional filings that will be made on Form S–1.[175] Form S–1 contains ''collection of information'' requirements within the meaning of the PRA. Although we are not amending Form S–1, we have submitted the Form S–1 ''collection of information'' (''Form S–1 Registration Statement'' (OMB Control No. 3235–0065)), which we estimate will increase as a result of rule 151A, to the Office of Management and Budget (''OMB'') for review and approval in accordance with the PRA.[176] We published notice soliciting comment on the increase in the collection of information requirements in the release proposing rule 151A and submitted the proposed collection of information to OMB for review and approval in accordance with 44 U.S.C. 3507(d) and 5 CFR 1320.11.

We adopted Form S–1 pursuant to the Securities Act. This form sets forth the disclosure requirements for registration statements that are prepared by eligible issuers to provide investors with the information they need to make informed investment decisions in registered offerings. We anticipate that, absent amendments to our disclosure requirements to specifically address indexed annuities, indexed annuities that register under the Securities Act would generally register on Form S–1.[177] As a result, we have assumed, for purposes of our PRA analysis, that this would be the case. We note, however, that we are providing a two-year transition period for rule 151A and, during this period, we intend to consider how to tailor disclosure requirements for indexed annuities.[178]

The hours and costs associated with preparing disclosure, filing forms, and retaining records constitute reporting and cost burdens imposed by the collection of information. An agency may not conduct or sponsor, and a person is not required to respond to, a collection of information unless it displays a currently valid OMB control number.

The information collection requirements related to registration statements on Form S–1 are mandatory. There is no mandatory retention period for the information disclosed, and the information disclosed will be made publicly available on the EDGAR filing system.

B. Summary of Information Collection

Because rule 151A will affect the number of filings on Form S–1 but not the disclosure required by this form, we do not believe that the rules will impose any new recordkeeping or information collection requirements. However, we expect that some insurance companies will register indexed annuities in the future that they would not previously have registered. We believe this will result in an increase in the number of annual responses expected with respect to Form S–1 and in the disclosure burden associated with Form S–1. At the same time, we expect that, on a per response basis, rule 151A will decrease the existing disclosure burden for Form S–1. This is because the disclosure burden for each indexed annuity on Form S–1 is likely to be lower than the existing burden per respondent on Form S–1. The decreased burden per response on Form S–1 will partially offset the increased burden resulting from the increase in the annual number of responses on Form S–1. We believe that, in the aggregate, the disclosure burden for Form S–1 will increase as a result of the adoption of rule 151A.

C. Paperwork Reduction Act Burden Estimates

For purposes of the PRA, we estimate that the rule will result in an annual increase in the paperwork burden for companies to comply with the Form S–1 collection of information requirements of approximately 60,000 hours of in-house company personnel time and approximately $72,000,000 for the services of outside professionals. These estimates represent the combined effect of an expected increase in the number of annual responses on Form S–1 and a decrease in the expected burden per response. These estimates include the time and the cost of preparing and reviewing disclosure, filing documents, and retaining records. Our methodologies for deriving the above estimates are discussed below.

We are adopting a new definition of ''annuity contract'' that, on a prospective basis, defines a class of indexed annuities that are not ''annuity contracts'' or ''optional annuity contracts'' for purposes of Section 3(a)(8) of the Securities Act, which provides an exemption under the Securities Act for certain insurance contracts. These indexed annuities will, on a prospective basis, be required to register under the Securities Act on Form S–1.[179]

---

but not to the associated separate account. *See supra* note 146 and accompanying text. On or after the effective date of rule 12h–7, the prospectus for a variable insurance contract with respect to which the insurer does not file Exchange Act reports (and therefore is relying on rule 12h–7) will be required to include the statement that the insurer is relying on rule 12h–7.

[174] 44 U.S.C. 3501 *et seq.*

[175] 17 CFR 239.11.

[176] 44 U.S.C. 3507(d); 5 CFR 1320.11.

[177] Some Securities Act offerings are registered on Form S–3 [17 CFR 239.13]. We do not believe that rule 151A will have any significant impact on the disclosure burden associated with Form S–3 because we believe that very few, if any, insurance companies that issue indexed annuities will be eligible to register those contracts on Form S–3. In order to be eligible to file on Form S–3, an issuer must, among other things, have filed Exchange Act reports for a period of at least 12 calendar months. General Instruction I.A.3. of Form S–3. Very few insurance companies that issue indexed annuities are currently eligible to file Form S–3. Further, any insurance companies that issue indexed annuities and rely on the Exchange Act reporting exemption that we are adopting will not meet the eligibility requirements for Form S–3. We believe that very few, if any, issuers of indexed annuities will choose to be subject to the reporting requirements of the Exchange Act because of the costs that this would impose. In any event, the number of indexed annuity issuers that choose to be subject to the reporting requirements of the Exchange Act would be insignificant compared to the total number of Exchange Act reporting companies, which is approximately 12,100. The number of indexed annuity issuers in 2007 was 58. NAVA, *supra* note 9, at 57.

We also do not believe that the rules will have any significant impact on the disclosure burden associated with reporting under the Exchange Act on Forms 10 K, 10 Q, and 8 K. As a result of rule 12h–7, insurance companies will not be required to file Exchange Act reports on these forms in connection with indexed annuities that are registered under the Securities Act, and, as noted in the prior paragraph, we believe that very few, if any, issuers of indexed annuities will choose to be subject to the reporting requirements of the Exchange Act because of the costs that this would impose. While rule 12h 7 will permit some insurance companies that are currently required to file Exchange Act reports as a result of issuing insurance contracts that are registered under the Securities Act, to cease filing those reports, the number of such companies is insignificant compared to the total number of Exchange Act reporting companies. Likewise, we do not believe that the prospectus statement required under rule 12h–7 for insurers relying on that rule will have any significant impact on the disclosure burden associated with registration statements for insurance contracts that are securities (Forms S–1, S–3, N–3, N–4, and N–6). We do not believe that the currently approved collections of information for these forms will change based on the rule 12h–7 prospectus statement.

[178] As noted above, some commenters expressed concern about what they believed to be a lack of a registration form that is well-suited to indexed annuities. *See supra* text accompanying notes 94 and 95.

[179] Some Securities Act offerings are registered on Form S–3, but we believe that very few, if any, insurance companies that issue indexed annuities

We received numerous comment letters on the proposal, and we have revised proposed rule 151A in response to the comments. However, we do not believe that any of the modifications affect the estimated reporting and cost burdens discussed in this PRA analysis. These modifications include:

○ Revising the proposed definition so that the rule will apply to a contract that specifies that amounts payable by the issuer under the contract are calculated at or after the end of one or more specified crediting periods, in whole or in part, by reference to the performance during the crediting period or periods of a security, including a group or index of securities;[180]

○ Eliminating the provision in proposed rule 151A that the issuer's determination as to whether amounts payable under the contract are more likely than not to exceed the amounts guaranteed under the contract be made not more than three years prior to the date on which the particular contract is issued;[181] and

○ Adopting a requirement that amounts payable by the issuer and amounts guaranteed are to be determined by taking into account all charges under the contract, including, without limitation, charges that are imposed at the time that payments are made by the issuer.[182]

We do not believe that any of these changes will affect the annual increase in the number of responses on Form S–1 or the hours per response required. As we state below, we assume that all indexed annuities that are offered on or after January 12, 2011, will be registered, and that each of the 400 registered indexed annuities will be the subject of one response per year on Form S–1. We do not expect the changes in the rule, as adopted, to affect our estimates of the increase in the number of annual responses required on Form S–1. The first change, revising the scope of the rule, addresses commenters' concerns that the rule was overly broad and would reach annuities that were not indexed annuities, such as traditional fixed annuities and discretionary excess interest contracts. While the revision clarifies the intended scope of the rule to address these concerns, our PRA estimates with respect to the proposed rule were based on the intended scope of the proposed rule, which did not extend to these other types of annuities. As a result, this change has no effect on our estimates of the number of responses required on Form S–1. Our PRA estimates assume that all indexed annuities that are offered will be registered, and we do not believe that this assumption is affected by the elimination of the requirement that an insurer's determination under rule 151A be made not more than three years prior to the date on which a particular contract is issued or the change to the manner of taking charges into account under the rule. In addition, the changes in the rule will not affect the information required to be disclosed by Form S–1, or the time required to prepare and file the form.

Increase in Number of Annual Responses

For purposes of the PRA, we estimate that there will be an annual increase of 400 responses on Form S–1 as a result of the rule. In 2007, there were 322 indexed annuity contracts offered.[183] For purposes of the PRA analysis, we assume that 400 indexed annuities will be offered each year. This allows for some escalation in the number of contracts offered in the future over the number offered in 2007. Our Office of Economic Analysis has considered the effect of the rule on indexed annuity contracts with typical terms and has determined that these contracts would not meet the definition of ''annuity contract'' or ''optional annuity contract'' if they were to be issued after the effective date of the rule. Therefore, we assume that all indexed annuities that are offered will be registered, and that each of the 400 registered indexed annuities will be the subject of one response per year on Form S–1,[184] resulting in the estimated annual increase of 400 responses on Form S–1.

Decrease in Expected Hours per Response

For purposes of the PRA, we estimate that there will be a decrease of 120 hours per response on Form S–1 as a result of the rule. Current OMB approved estimates and recent Commission rulemaking estimate the hours per response on Form S–1 as 950.[185] The current hour estimate represents the burden for all issuers, both large and small. We believe that registration statements on Form S–1 for indexed annuities will result in a significantly lower number of hours per response, which, based on our experience with other similar contracts, we estimate as 600 hours per indexed annuity response on Form S–1. We attribute this lower estimate to two factors. First, the estimated 400 indexed annuity registration statements will likely be filed by far fewer than 400 different insurance companies,[186] and a significant part of the information in each of the multiple registration statements filed by a single insurance company will be the same, resulting in economies of scale with respect to the multiple filings. Second, many of the 400 responses on Form S–1 each year will be annual updates to registration statements for existing contracts, rather than new registration statements, resulting in a significantly lower hour burden than a new registration statement.[187] Combining our estimate of 600 hours per indexed annuity response on Form S–1 (for an estimated 400 responses) with the existing estimate of 950 hours per response on Form S–1 (for an estimated 768 responses),[188] our new estimate is 830 hours per response $(((400 \times 600) + (768 \times 950))/1168)$.

Net Increase in Burden

To calculate the total effect of the rules on the overall compliance burden for all issuers, large and small, we added the burden associated with the 400 additional Forms S–1 that we estimate will be filed annually in the future and subtracted the burden associated with our reduced estimate of 830 hours for each of the current estimated 768 responses. We used current OMB approved estimates in our calculation of the hours and cost burden associated with preparing, reviewing, and filing Form S–1.

Consistent with current OMB approved estimates and recent Commission rulemaking,[189] we estimate that 25% of the burden of preparation of Form S–1 is carried by the company

will be eligible to register those contracts on Form S–3. *See supra* note 177.

[180] Rule 151A(a)(1).

[181] Proposed Rule 151A(b)(2)(iii).

[182] Rule 151A(b)(1).

[183] *See* NAVA, *supra* note 9, at 57.

[184] Annuity contracts are typically offered to purchasers on a continuous basis, and as a result, an insurer offering an annuity contract that is registered under the Securities Act generally will be required to update the registration statement once a year. *See* Section 10(a)(3) of the Securities Act [15 U.S.C. 77j(a)(3)] (when prospectus used more than 9 months after effective date of registration statement, information therein generally required to be not more than 16 months old).

[185] These estimates have been revised by other rules that the Commission has adopted, and OMB approval is pending. *See* Supporting Statement to the Office of Management and Budget under the PRA for Securities Act Release No. 8876, available at: *http://www.reginfo.gov/public/do/DownloadDocument?documentID=90204&version=0* (''33–8876 Supporting Statement'').

[186] The 322 indexed annuities offered in 2007 were issued by 58 insurance companies. *See* NAVA, *supra* note 9, at 57.

[187] *See supra* note 184.

[188] *See* 33–8876 Supporting Statement, *supra* note 185.

[189] *See* Securities Act Release No. 8878 (Dec. 19, 2007) [72 FR 73534, 73547 (Dec. 27, 2007)].

internally and that 75% of the burden is carried by outside professionals retained by the issuer at an average cost of $400 per hour.[190] The portion of the burden carried by outside professionals is reflected as a cost, while the burden carried by the company internally is reflected in hours.

The tables below illustrate our estimates concerning the incremental annual compliance burden in the collection of information in hours and cost for Form S–1.

INCREMENTAL PRA BURDEN DUE TO INCREASED FILINGS

Estimated increase in annual responses	Hours/ response	Incremental burden (hours)
400	830	332,000

INCREMENTAL DECREASE IN PRA BURDEN DUE TO DECREASE IN HOURS PER RESPONSE

Estimated decrease in hours/response	Current estimated number of annual filings	Incremental decrease in burden (hours)
(120)	768	(92,200)

SUMMARY OF CHANGE IN INCREMENTAL COMPLIANCE BURDEN

Incremental burden (hours)	25% Issuer (hours)	75% Professional (hours)	$400/hr. professional cost
240,000	60,000	180,000	$72,000,000

D. Response to Comments on Commission's Paperwork Reduction Act Analysis

A few commenters commented on the Commission's Paperwork Reduction Act analysis in the Proposing Release.[191] One commenter stated that external costs of registering indexed annuities on Form S–1 will vary considerably depending on whether the insurer has previously prepared a Form S–1.[192] The commenter stated that, for insurers that have not previously prepared a Form S–1 registration statement, external legal costs could be as high as $250,000–$500,000 for each registration statement. The same commenter estimated external legal costs for an issuer that has previously filed a Form S–1 at $50,000–$100,000. Another commenter estimated external legal costs for preparation and filing of a Form S–1 registration statement with the SEC at $350,000 for the first few years, which, the commenter stated, would decrease over time as the insurer gained more expertise.[193] However, these commenters did not specify the sources of these cost estimates or how they were made.

As stated above, we estimate the average burden per indexed annuity response on Form S–1 to be 600 hours. We further estimate that 75% of that burden will be carried by outside professionals retained by the issuer at an average cost of $400 per hour. Accordingly, we estimate the cost for outside professionals for each indexed annuity registration statement on Form S–1 to be on average $180,000 ((600 × .75) × $400). We do not believe that it is necessary to change our estimate of outside professional costs based on the commenters' estimated costs. The $250,000–$500,000 range cited by the commenters is for an issuer that has not previously filed a Form S–1, with commenters acknowledging that the costs to an experienced filer would be lower (as low as $50,000–$100,000). Our $180,000 estimate reflects outside professional costs incurred not only by first-time Form S–1 filers, but also the costs of preparing Form S–1 for contracts offered by experienced Form S–1 filers, as well as annual updates to existing Form S–1 registration statements, which we expect to be significantly lower than costs incurred by first-time filers.

One commenter cites a cost of $255,000 for the insurer to prepare a registration statement.[194] It is not clear whether this cost represents only external costs or total costs. The commenter also estimates the cost of preparing a registration statement for certain types of carriers at $62,500[195] and further indicates that there are 27 such carriers issuing indexed annuities, which is approximately half the number of insurers currently issuing indexed annuities.[196] Because the commenter does not provide information as to the basis for the $255,000 figure, and because the $62,500 figure is substantially below the Commission's estimate of $180,000, we are not revising our estimate of the burden of registering an indexed annuity on Form S–1 to reflect these estimates.

Another commenter stated that the Commission's estimate of outside professional costs of $400 per hour does not reflect market rates for securities counsel.[197] However, the commenter did not cite a different rate and did not explain the basis for its disagreement with the $400 per hour rate cited by the Commission. Our estimate of $400 per hour for outside professionals retained by the issuer is consistent with recent rulemakings and is based on discussions between our staff and several law firms.[198] Accordingly, we are not changing our estimate of the cost per hour of outside professional costs. The commenter further stated that the estimates of time involved are low for persons unfamiliar with the process of registration of securities under the federal securities laws and the anticipated need for interaction with Commission staff. However, as discussed, our estimate of time required to prepare a registration statement reflects time needed not only by first-time Form S–1 filers, but also the time involved in preparing Form S–1 for contracts offered by experienced Form S–1 filers, as well as annual updates to the existing Form S–1 registration statement, which we expect to be significantly less than time needed by first-time filers. We are not revising our estimate of time involved in preparing registration statements on Form S–1.

V. Cost-Benefit Analysis

The Commission is sensitive to the costs and benefits imposed by its rules. Rule 151A is intended to clarify the status under the federal securities laws

[190] *Id.* at note 110 and accompanying text.

[191] *See, e.g.,* Allianz Letter, *supra* note 54; Second Aviva Letter, *supra* note 54; Letter of National Association for Fixed Annuities (Nov. 17, 2008) (''Second NAFA Letter''); Transamerica Letter, *supra* note 54.

[192] Allianz Letter, *supra* note 54.

[193] Second Aviva Letter, *supra* note 54.

[194] Second NAFA Letter, *supra* note 191.

[195] This estimate is for carriers ''without variable authority.'' The commenter does not explain the meaning of the phrase ''without variable authority.''

[196] NAVA, *supra* note 9, at 57 (58 companies issued indexed anuities in 2007).

[197] Transamerica Letter, *supra* note 54.

[198] *See, e.g.,* Securities Act Release No. 8909 (Apr. 10, 2008) [73 FR 20512, 20515 (Apr. 15, 2008)] (''Revisions to Form S–11 Release'').

of indexed annuities, under which payments to the purchaser are dependent on the performance of a securities index. Section 3(a)(8) of the Securities Act provides an exemption for certain insurance contracts. The rule prospectively defines certain indexed annuities as not being ''annuity contracts'' or ''optional annuity contracts'' under this insurance exemption if the amounts payable by the insurer under the contract are more likely than not to exceed the amounts guaranteed under the contract. With respect to these annuities, investors are entitled to all the protections of the federal securities laws, including full and fair disclosure and sales practice protections. We are also adopting new rule 12h–7 under the Exchange Act, which exempts certain insurance companies from Exchange Act reporting with respect to indexed annuities and certain other securities that are registered under the Securities Act and regulated as insurance under state law.

In the Proposing Release, we identified certain costs and benefits and requested comment on our cost-benefit analysis, including identification of any costs and benefits not discussed. We also requested that commenters provide empirical data and factual support for their views.

Discussed below is our analysis of the costs and benefits of rules 151A and 12h–7, as well as the issues raised by commenters. As noted above, we are sensitive to the costs imposed by our rules and we have estimated the costs associated with adoption of rule 151A. We emphasize, however, that the burdens of complying with the federal securities laws apply to all market participants who issue or sell securities under the federal securities laws. Rule 151A, by defining those indexed annuities that are not entitled to the Section 3(a)(8) exemption, does not impose any greater or different burdens than those imposed on other similarly situated market participants. Rather, the effect of rule 151A is that issuers and sellers of indexed annuities that are not entitled to the Section 3(a)(8) exemption are treated in the same manner under the federal securities laws as issuers and sellers of other registered securities, and that investors purchasing these instruments receive the same disclosure, antifraud, and sales practice protections that apply when they are offered and sold other securities that pose similar investment risks.

A. Benefits

We anticipate that the rules will benefit investors and covered institutions by: (i) Creating greater regulatory certainty with regard to the status of indexed annuities under the federal securities laws; (ii) enhancing disclosure of information needed to make informed investment decisions about indexed annuities; (iii) applying sales practice protections to those indexed annuities that are outside the insurance exemption; (iv) enhancing competition; and (v) relieving from Exchange Act reporting obligations insurers that issue certain securities that are regulated as insurance under state law.

Regulatory Certainty

Rule 151A will provide the benefit of increased regulatory certainty to insurance companies that issue indexed annuities and the distributors who sell them, as well as to purchasers of indexed annuities. The status of indexed annuities under the federal securities laws has been uncertain since their introduction in the mid-1990s. Under existing precedents, the status of each indexed annuity is determined based on a facts and circumstances analysis of factors that have been articulated by the U.S. Supreme Court. Rule 151A will bring greater certainty into this area by defining a class of indexed annuities that are outside the scope of the insurance exemption and by providing that an insurer's determination, in accordance with the rule, will be conclusive.

Indexed annuities possess both insurance and securities features, and fall somewhere between traditional fixed annuities, which are clearly insurance falling within Section 3(a)(8), and variable annuities, which are clearly securities. We have carefully considered where to draw the line, and we believe that the line that we have drawn is rational and reasonably related to fundamental concepts of risk and insurance.

Some commenters agreed that the proposal would provide greater regulatory certainty.[199] One commenter stated that current uncertainty regarding the status of indexed annuities has impeded the ability of regulators to protect indexed annuity consumers,[200] and another stated that it is apparent that clarification is needed and will set a clear national standard of regulatory oversight for indexed annuities.[201] Some commenters, however, expressed concern that the principles-based approach provides insufficient guidance regarding implementation and the methodologies and assumptions that are appropriate and could result in inconsistent determinations by different insurance companies and present enforcement and litigation risk.[202] While we believe that further guidance may be helpful in response to specific questions from affected insurance companies, commenters generally did not articulate with specificity the areas where they believe that further guidance is required. As a result, in order to provide guidance in the manner that would be most helpful, we encourage insurance companies, sellers of indexed annuities, and other affected parties to submit specific requests for guidance, which we will consider during the two-year period between adoption of rule 151A and its effectiveness.

Disclosure

Rule 151A extends the benefits of full and fair disclosure under the federal securities laws to investors in indexed annuities that, under the rule, fall outside the insurance exemption. Without such disclosure, investors face significant obstacles in making informed investment decisions with regard to purchasing indexed annuities that expose them to investment risk. Indexed annuities are similar in many ways to mutual funds, variable annuities, and other securities. Investors in indexed annuities are confronted with many of the same risks and benefits that other securities investors are confronted with when making investment decisions. Extending the federal securities disclosure regime to indexed annuities under which amounts payable by the insurer are more likely than not to exceed the amounts guaranteed should help to provide investors with the information they need.

Disclosures required for registered indexed annuities include information about costs (such as surrender charges); the method of computing indexed return (*e.g.*, applicable index, method for determining change in index, caps, participation rates, spreads); minimum guarantees, as well as guarantees, or lack thereof, with respect to the method for computing indexed return; and benefits (lump sum, as well as annuity and death benefits). We think there are significant benefits to the disclosures provided under the federal securities laws. This information will be public and accessible to all investors, intermediaries, third party information providers, and others through the

[199] *See, e.g.*, Advantage Group Letter, *supra* note 54; Cornell Letter, *supra* note 7; FINRA Letter, *supra* note 7; ICI Letter, *supra* note 7; Letter of State of Washington Department of Financial Institutions Securities division (Nov. 17, 2008) (''Washington State Letter'').

[200] FINRA Letter, *supra* note 7.

[201] Washington State Letter, *supra* note 199.

[202] *See supra* note 119.

Commission's Electronic Data Gathering, Analysis and Retrieval (''EDGAR'') system. Public availability of this information will be helpful to investors in making informed decisions about purchasing indexed annuities. The information will enhance investors' ability to compare various indexed annuities and also to compare indexed annuities with mutual funds, variable annuities, and other securities and financial products. The potential liability for materially false and misleading statements and omissions under the federal securities laws will provide additional encouragement for accurate and complete disclosures by insurers that issue indexed annuities and by the broker-dealers who sell them.[203]

In addition, we believe that potential purchasers of indexed annuities that an insurer determines do not fall outside the insurance exemption under the rule may benefit from enhanced information that will help a purchaser to evaluate the value of the contract and, specifically, the index-based return. Specifically, an indexed annuity that is not registered under the Securities Act after the effective date of rule 151A would reflect the insurer's determination that investors in the annuity will not receive more than the amounts guaranteed under the contract at least half the time.

A number of commenters acknowledged the need for improved disclosures and agreed that indexed annuity purchasers will benefit from disclosures required under the federal securities laws.[204] These commenters noted that indexed annuities are complicated products that can confuse experienced investment professionals and consumers, and strongly supported rule 151A as improving critical disclosures about these products. One commenter expressed strong support for enhanced disclosures regarding critical costs of indexed annuities, such as surrender charges, and the method of computing indexed returns, as well as guaranteed interest rates.[205] Another commenter noted that the Commission could greatly improve consumer protection by subjecting indexed annuities that are not ''annuity contracts'' under rule 151A to the ''thorough, standardized, accessible, and transparent disclosure requirements and antifraud rules of the federal securities laws.'' [206]

However, some commenters argued that the proposed rule would not result in enhanced disclosure, in particular because the Commission's disclosure scheme is not tailored to indexed annuities and Form S–1 is not well-suited to indexed annuities.[207] We acknowledge that, as a result of indexed annuity issuers having historically offered and sold their contracts without complying with the federal securities laws, the Commission has not created specific disclosure requirements tailored to these products. This fact, though, is not relevant in determining whether indexed annuities are subject to the federal securities laws. The Commission has a long history of creating appropriate disclosure requirements for different types of securities, including securities issued by insurance companies, such as variable annuities and variable life insurance.[208] We note that we are providing a two-year transition period for rule 151A, and, during this period, we intend to consider how to tailor disclosure requirements for indexed annuities. We encourage indexed annuity issuers to work with the Commission during that period to address their concerns.

Some commenters also cited recent efforts by state insurance regulators to address disclosure concerns with respect to indexed annuities as evidence that federal securities regulation is unnecessary.[209] However, as we state above, we disagree. We do not believe that the states' regulatory efforts, no matter how strong, can substitute for our obligation to identify securities covered by the federal securities laws and the protections Congress intended to apply. State insurance laws, enforced by multiple regulators whose primary charge is the solvency of the issuing insurance company, cannot serve as an adequate substitute for uniform, enforceable investor protections provided by the federal securities laws.

We have carefully considered the concerns raised by commenters, and we continue to believe that rule 151A will greatly enhance disclosures regarding indexed annuities. In addition to the specific benefits described above, we anticipate that these enhanced disclosures will also benefit the overall financial markets and their participants.

We anticipate that the disclosure of terms of indexed annuities will be broadly beneficial to investors, enhancing the efficiency of the market for indexed annuities through increased competition. Disclosure will make information on indexed annuity contracts, including terms, publicly available. Public availability of terms will better enable investors to compare indexed annuities and may focus attention on the price competitiveness of these products. It will also improve the ability of third parties to price contracts, giving purchasers a better understanding of the fees implicit in the products. We anticipate that third-party information providers may provide services to price or compare terms of different indexed annuities. Analogously, we note that public disclosure of mutual fund information has enabled third-party information aggregators to facilitate comparison of fees.[210] We believe that increasing the level of price transparency and the resulting competition through enhanced disclosure regarding indexed annuities would be beneficial to investors. It could also expand the size of the market, as investors may have increased confidence that indexed annuities are competitively priced.

Sales Practice Protections

Investors will also benefit because, under the federal securities laws, persons effecting transactions in indexed annuities that fall outside the insurance exemption under rule 151A will be required to be registered broker-dealers or become associated persons of a broker-dealer through a networking arrangement. Thus, the broker-dealer sales practice protections will apply to transactions in registered indexed annuities. As a result, investors who purchase these indexed annuities after the effective date of rule 151A will receive the benefits associated with a registered representative's obligation to make only recommendations that are suitable. The registered representatives who sell registered indexed annuities will be subject to supervision by the broker-dealer with which they are associated. Both the selling broker-dealer and its registered representatives will be subject to the oversight of FINRA.[211] The registered broker-dealers

[203] *See, e.g.*, Section 12(a)(2) of the Securities Act [15 U.S.C. 77*l*(a)(2)] (imposing liability for materially false or misleading statements in a prospectus or oral communication, subject to a reasonable care defense). *See also* Section 10(b) of the Exchange Act [15 U.S.C. 78j(b)]; rule 10–5 under the Exchange Act [17 CFR 240.10b–;5]; Section 17 of the Securities Act [15 U.S.C. 77q] (general antifraud provisions).

[204] *See, e.g.*, Alabama Letter, *supra* note 72; Cornell Letter, *supra* note 7; FPA Letter, *supra* note 72; Hartford Letter, *supra* note 55.

[205] FPA Letter, *supra* note 72.

[206] Hartford Letter, *supra* note 55.

[207] *See supra* note 94 and accompanying text.

[208] *See* Form N–4 [17 CFR 239.17b and 274.11c] (registration form for variable annuities); Form N–6 [17 CFR 239.17c and 274.11d] (registration form for variable life insurance).

[209] *See supra* note 81 and accompanying text.

[210] *See, e.g.*, FINRA, Fund Analyzer, available at: *http://www.finra.org/fundanalyzer* (''FINRA Fund Analyzer'').

[211] *Cf.* NASD Rule 2821 (rule designed to enhance broker-dealers' compliance and supervisory systems and provide more comprehensive and targeted

will also be required to comply with specific books and records, supervisory, and other compliance requirements under the federal securities laws, as well as be subject to the Commission's general inspections and, where warranted, enforcement powers.

A number of commenters agreed that indexed annuity purchasers will benefit from the sales practice protections accorded by the federal securities laws.[212] These commenters indicated that sales practice protections accorded by the federal securities laws are the most effective means of preventing abusive sales practices. Some commenters specifically stated that the protections of the federal securities laws are needed for the protection of seniors in the indexed annuity marketplace.[213]

As stated above, however, a number of commenters argued that, because of efforts by state insurance regulators to address sales practice concerns with respect to indexed annuities, federal securities regulation is unnecessary and could result in duplicative or overlapping regulation.[214] Commenters cited, in particular, the adoption by the majority of states of the NAIC Suitability in Annuity Transactions Model Regulation.[215] Commenters also cited the existence of state market conduct examinations, the use of state enforcement and investigative authority, licensing and education requirements applicable to insurance agents who sell indexed annuities, and a number of recent and ongoing efforts by state insurance regulators.[216] Commenters also noted recent efforts by state regulators addressed to annuities generally, such as the creation of NAIC working groups to review and consider possible improvements to the NAIC Suitability in Annuity Transactions Model Regulation.[217]

However, for the same reasons that we do not believe recent state disclosure efforts can substitute for federally required disclosures, we do not believe that the state's efforts to address sales practice concerns, no matter how strong, can substitute for our responsibility to identify securities covered by the statutes and the protections Congress intended to apply. State insurance laws, enforced by multiple regulators whose primary charge is the solvency of the issuing insurance company, cannot serve as an adequate substitute for uniform, enforceable investor protections provided by the federal securities laws.[218] Where the purchaser of an indexed annuity assumes the investment risk of an instrument that fluctuates with the securities markets, and the contract therefore does not fall within the Section 3(a)(8) exemption, the application of state insurance regulation, no matter how effective, is not determinative as to whether the contract is subject to the federal securities laws.

Enhanced Competition

Rule 151A may result in enhanced competition among indexed annuities, as well as between indexed annuities and other competing financial products, such as mutual funds and variable annuities. Rule 151A will result in enhanced disclosure, and, as a result, more informed investment decisions by potential investors, which may enhance competition among indexed annuities and competing products. The greater clarity that results from rule 151A may enhance competition as well because insurers who may have been reluctant to issue indexed annuities while their status was uncertain may now decide to enter the market. Similarly, registered broker-dealers who currently may be unwilling to sell unregistered indexed annuities because of their uncertain regulatory status may become willing to sell indexed annuities that are registered, thereby increasing competition among distributors of indexed annuities. Further, we believe that the Exchange Act exemption may enhance competition among insurance products and between insurance products and other financial products because the exemption may encourage insurers to innovate and introduce a range of new insurance contracts that are securities, since the exemption will reduce the regulatory costs associated with doing so. Increased competition may benefit investors through improvements in the terms of insurance products and other financial products, such as reductions of direct or indirect fees.

We anticipate that the disclosure of terms of indexed annuities will be broadly beneficial to investors, enhancing the efficiency of the market for indexed annuities through increased competition. Disclosure will make information on indexed annuity contracts, including terms, publicly available. Public availability of terms will better enable investors to compare indexed annuities and may focus attention on the price competitiveness of these products. It will also improve the ability of third parties to price contracts, giving purchasers a better understanding of the fees implicit in the products. We anticipate that third-party information providers may provide services to price or compare terms of different indexed annuities. Analogously, we note that public disclosure of mutual fund information has enabled third-party information aggregators to facilitate comparison of fees.[219] We believe that increasing the level of price transparency and the resulting competition through enhanced disclosure regarding indexed annuities would be beneficial to investors. It could also expand the size of the market, as investors may have increased confidence that indexed annuities are competitively priced.

A number of commenters argued that proposed rule 151A would hinder competition, citing a number of factors that they argued would result in indexed annuities becoming less available.[220] Commenters indicated that they did not believe that broker-dealers would become more willing to sell indexed annuities.[221] They stated that

protection to investors regarding deferred variable annuities). *See* Order Approving FINRA's NASD Rule 2821 Regarding Members' Responsibilities for Deferred Variable Annuities (Approval Order), Securities Exchange Act Release No. 56375 (Sept. 7, 2007), 72 FR 52403 (Sept. 13, 2007) (SR–NASD–2004–183); Corrective Order, Securities Exchange Act Release No. 56375A (Sept. 14, 2007), 72 FR 53612 (September 19, 2007) (SR–NASD–2004–183) (correcting the rule's effective date).

[212] *See, e.g.*, Alabama Letter, *supra* note 72; Cornell Letter, *supra* note 7; FPA Letter, *supra* note 72; FINRA Letter, *supra* note 7; Hartford Letter, *supra* note 55; Wyoming Letter, supra note 72.

[213] Alabama Letter, *supra* note 72; Wyoming Letter, *supra* note 72.

[214] *See supra* note 81 and accompanying text.

[215] NAIC Suitability in Annuity Transactions Model Regulation (Model 275–1) (2003). National Association of Insurance Commissioners, Draft Model Summaries, available at: *http://www.naic.org/committees_models.htm. See, e.g.*, Letter A, *supra* note 76; American Bankers Letter, *supra* note 74; CAI 151A Letter, *supra* note 54; NAFA Letter, *supra* note 54; NAIC Officer Letter, *supra* note 54; NAIFA Letter, *supra* note 54.

[216] *See, e.g.*, American Equity Letter, *supra* note 54; Aviva Letter, *supra* note 54; Coalition Letter, *supra* note 54; Iowa Letter, *supra* note 74; Maryland Letter, *supra* note 54; NAIC Officer Letter, *supra* note 54; NAFA Letter, *supra* note 54.

[217] *See, e.g.*, NAIC Officer Letter, *supra* note 54.

[218] Indeed, at least one state regulator acknowledged the developmental nature of state efforts and the lack of uniformity in those efforts. *See* Voss Letter, *supra* note 13.

[219] *See, e.g.*, FINRA Fund Analyzer, *supra* note 210.

[220] *See, e.g.*, Advantage Group Letter, *supra* note 54; Allianz Letter, *supra* note 54; American Equity Letter, *supra* note 54; American National Letter, *supra* note 54; Aviva Letter, *supra* note 54; Coalition Letter, *supra* note 54; FBL Letter, *supra* note 73; National Western Letter, *supra* note 54; Old Mutual Letter, *supra* note 54; Southwest Letter, *supra* note 136.

We note that a number of commenters supporting the proposal are industry participants, such as insurers, *see, e.g.*, Hartford letter, *supra* note 55, and industry groups, *see, e.g.*, ICI letter, *supra* note 7.

[221] *See, e.g.*, Allianz Letter, *supra* note 54; Aviva Letter, *supra* note 54; Coalition Letter, *supra* note 54.

broker-dealers have limited ''shelf space'' for new products.[222] One commenter stated that a broker-dealer would incur start-up costs in selling indexed annuities, such as becoming familiar with the products, performing due diligence, setting up supervisory systems, introducing appropriate technology, and becoming licensed to sell insurance, and these costs would deter a broker-dealer from selling indexed annuities.[223] A number of commenters stated that many agents currently selling indexed annuities would stop selling them, rather than incur the costs of becoming licensed to sell securities and becoming associated with a broker-dealer.[224] Two commenters stated that some agents would not be able to associate with a broker-dealer due to remote locations of the agents, so that rural areas would be underserved.[225] Commenters further pointed to obstacles to distributors networking with registered broker-dealers.[226] Commenters also stated that some insurance companies may stop issuing indexed annuities, because of the rule's adverse impact on distribution and because of the costs that the rule would impose on insurers, such as the cost of registering indexed annuities.[227]

The Commission believes that there could be costs associated with diminished competition as a result of rule 151A. As the commenters note, some insurance companies may stop issuing indexed annuities, and some broker-dealers and agents may determine not to sell indexed annuities. We recognize that the impact of rule 151A on competition may be mixed, but, on balance, we continue to believe that rule 151A will provide the benefits described above and has the potential to increase competition. In this regard, the demand for financial products is relatively fixed, in the aggregate. Any potential reduction in indexed annuities sold under the rule would likely correspond with an increase in the sale of other financial products, such as mutual funds or variable annuities. Thus, total reductions in competition may not be significant, when effects on the financial industry as a whole, including insurance companies together with other providers of financial instruments, are considered. Within the insurance industry, if some insurers cease selling indexed annuities, it is also likely that these insurers will sell other products through the same distribution channels, such as annuities with fixed interest rates.

Relief From Reporting Obligations

The exemption from Exchange Act reporting requirements with respect to certain securities that are regulated as insurance under state law will provide a cost savings to insurers. We have identified approximately 24 insurance companies that currently are subject to Exchange Act reporting obligations solely as a result of issuing insurance contracts that are securities and that we believe will be entitled to an exemption from Exchange Act reporting obligations under rule 12h–7.[228] We estimate that, each year, these insurers file an estimated 24 annual reports on Form 10–K, 72 quarterly reports on Form 10–Q, and 26 reports on Form 8–K.[229] Based on current cost estimates, we believe that the total estimated annual cost savings to these companies will be approximately $15,414,600.[230]

One commenter estimated a higher cost savings.[231] The commenter estimated costs of $1.5–$2 million annually for an issuer to comply with Exchange Act reporting obligations. Under our current cost estimates, we estimate that it costs $642,275 per issuer[232] to comply with these obligations. We are not revising our estimate, however, because the commenter did not explain how it arrived at its estimate and we have no basis for determining whether or not it is accurate.

B. Costs

While the rules we are adopting will result in significant cost savings for insurers as a result of the exemption from Exchange Act reporting requirements, we believe that there will be costs associated with the rules. These include costs associated with: (i) Determining under rule 151A whether amounts payable by the insurer under an indexed annuity are more likely than not to exceed the amounts guaranteed under the contract; (ii) preparing and filing required Securities Act registration statements with the Commission; (iii) printing prospectuses and providing them to investors; (iv) entering into a networking arrangement with a registered broker-dealer for those entities that are not currently parties to a networking arrangement or registered as broker-dealers and that intend to distribute indexed annuities that are registered as securities;[233] (v) loss of revenue to insurance companies that determine to cease issuing indexed annuities; and (vi) diminished competition that may result.

Some commenters opined that the benefits of the proposal to indexed annuity purchasers would outweigh any costs to the indexed annuity industry.[234] One commenter, for example, recognized that the proposal would impose some compliance costs

[222] *See, e.g.*, Allianz Letter, *supra* note 54; Aviva Letter, *supra* note 54.

[223] Allianz Letter, *supra* note 54.

[224] *See, e.g.*, Allianz Letter, *supra* note 54; American Equity Letter, *supra* note 54; Aviva Letter, *supra* note 54; Coalition Letter, *supra* note 54.

[225] Second Old Mutual Letter, *supra* note 76; Southwest Letter, *supra* note 136.

[226] *See, e.g.*, American Equity Letter, *supra* note 54; Coalition Letter, *supra* note 54; Old Mutual Letter, *supra* note 54.

[227] *See, e.g.*, Aviva Letter, *supra* note 54; National Western Letter, *supra* note 54; Old Mutual Letter, *supra* note 54.

[228] In addition, because we are adopting both rules 151A and 12h–7, insurers that currently are not Exchange Act reporting companies and that will be required to register indexed annuities under the Securities Act will be entitled to rely on the Exchange Act exemption and obtain the benefits of the exemption. We have not included potential cost savings to these companies in our computation because they are not currently Exchange Act reporting companies.

[229] These estimates are based on the requirement to file one Form 10–K each year and three Forms 10–Q each year, and on our review of the actual number of Form 8–K filings by these insurers in calendar year 2007.

[230] This consists of $8,748,950 attributable to internal personnel costs, representing 49,994 burden hours at $175 per hour, and $6,665,600 attributable to the costs of outside professionals, representing 16,664 burden hours at $400 per hour. Our estimates of $175 per hour for internal time and $400 per hour for outside professionals are consistent with the estimates that we have used in recent rulemaking releases.

Our total burden hour estimate for Forms 10–K, 10–Q, and 8–K is 66,658 hours, which, consistent with current OMB estimates and recent Commission rulemaking, we have allocated 75% (49,994 hours) to the insurers internally and 25% (16,664 hours) to outside professional time. *See* Supporting Statement to the Office of Management and Budget under the PRA for Securities Act Release No. 8819, available at: *http://www.reginfo.gov/public/do/DownloadDocument?documentID=42924&version=1.* The total burden hour estimate was derived as follows. The burden attributable to Form 10–K is 52,704 hours, representing 24 Forms 10–K at 2,196 hours per Form 10–K. The burden attributable to Form 10–Q is 13,824 hours, representing 72 Forms 10–Q at 192 hours per Form 10–Q. The burden attributable to Form 8–K is 130 hours, representing 26 Forms 8–K at 5 hours per Form 8–K. The burden hours per response for Form 10–K (2,196 hours), Form 10–Q (192 hours), and Form 8–K (5 hours) are consistent with current OMB estimates.

[231] Great-West Letter, *supra* note 138.

[232] The $642,275 cost was derived by dividing the total annual cost savings for all insurance companies that we believe will be entitled to the rule 12h–7 exemption ($15,414,600) by the number of such companies (24). *See supra* text accompanying notes 228 and 230.

[233] While some distributors may register as broker-dealers or cease distributing indexed annuities that will be required to be registered as a result of rule 151A, based on our experience with insurance companies that issue insurance products that are also securities, we believe that the vast majority will continue to distribute those indexed annuities via networking arrangements with registered broker-dealers, as discussed below.

[234] *See, e.g.*, Cornell Letter, *supra* note 7; NASAA Letter, *supra* note 133.

on the indexed annuity industry, but stated that these costs are minimal relative to the gains to investors in regulatory oversight.[235] The commenter stated that the rule would bring clarity regarding the status of indexed annuities under the federal securities laws and would subject indexed annuity sales to the application of suitability and antifraud protections under the federal securities laws.

A number of other commenters, however, stated that the Commission significantly underestimated the costs of the proposal.[236] As discussed below, these commenters stated that the proposal would impose substantial costs throughout the industry, affecting insurers, agents, marketing organizations. Commenters also stated that consumers would face additional costs as a result of the proposal, as the costs of product development and offering and selling registered securities are passed on to consumers.[237] We also received a number of comments specifically stating that the proposal would have an adverse impact on small entities, such as small insurance distributors.[238]

The following is a more detailed discussion of specific costs that we believe will be associated with the rule. We specifically identified and discussed each of these costs in the Proposing Release. We received comments on each identified cost.

Determination Under Rule 151A

Insurers may incur costs in performing the analysis necessary to determine whether amounts payable under an indexed annuity would be more likely than not to exceed the amounts guaranteed under the contract. This analysis calls for the insurer to analyze expected outcomes under various scenarios involving different facts and circumstances. Insurers routinely undertake such analyses for purposes of pricing and valuing their contracts.[239] As a result, we believe that the costs of undertaking the analysis for purposes of the rule may not be significant. However, the determinations necessary under the rule may result in some additional costs for insurers that issue indexed annuities, either because the timing of the determination does not coincide with other similar analyses undertaken by the insurer or because the level or type of actuarial and legal analysis that the insurer determines is appropriate under the rule is different or greater than that undertaken for other purposes, or for other reasons. These costs, if any, could include the costs of software, as well as the costs of internal personnel and external consultants (*e.g.*, actuarial, accounting, legal).

Several commenters who issue indexed annuities disputed that insurers undertake these analyses.[240] Other commenters, however, confirmed that these analytical methods exist and are used by insurers for internal purposes.[241] We continue to believe that because insurers routinely undertake these types of analyses, the costs of doing so for purposes of the rule may not be significant.

Securities Act Registration Statements

As noted above, we believe that significant benefits arise from the registration of indexed annuities, including enhanced disclosures of critical information regarding these products. Without such disclosure, investors face significant obstacles in making informed investment decisions with regard to purchasing indexed annuities that expose investors to securities investment risk. Investors in indexed annuities are confronted with many of the same risks and benefits that other securities investors are confronted with when making investment decisions. Extending the federal securities disclosure regime to indexed annuities that impose investment risk should help to provide investors with the information they need. The costs of preparing and filing registration statements are not unique to indexed annuities that are outside the scope of the Section 3(a)(8) exemption for annuities as a result of rule 151A, but apply to all issuers of registered securities. However, we are sensitive to these costs and discuss them below, along with comments that we received on this analysis.

Insurers will incur costs associated with preparing and filing registration statements for indexed annuities that are outside the insurance exemption as a result of rule 151A. These include the costs of preparing and reviewing disclosure, filing documents, and retaining records. Our Office of Economic Analysis has considered the effect of the rule on indexed annuity contracts with typical terms and has determined that, more likely than not, these contracts would not meet the definition of ''annuity contract'' or ''optional annuity contract'' if they were issued after the effective date of the rule. For purposes of the PRA, we have estimated an annual increase in the paperwork burden for companies to comply with the rules to be 60,000 hours of in-house company personnel time and $72,000,000 for services of outside professionals.[242] We estimate that the additional burden hours of in-house company personnel time will equal total internal costs of $10,500,000[243] annually, resulting in aggregate annual costs of $82,500,000[244] for in-house personnel and outside professionals. These costs reflect the assumption that filings will be made on Form S–1 for 400 contracts each year, which we made for purposes of the PRA.

As indicated in our analysis for purposes of the PRA, we received several comments questioning our estimate of the costs of registering an indexed annuity on Form S–1.[245] One commenter stated that, for insurers that have not previously prepared a Form S–1 registration statement, external legal costs could be as high as $250,000–$500,000 for each registration statement.[246] However, the commenter did not specify the source of this range of cost estimates or how it was made. The $250,000–$500,000 range cited by the commenter is for an

[235] Cornell Letter, *supra* note 7.

[236] *See, e.g.*, Allianz Letter, *supra* note 54; ACLI Letter, *supra* note 94; American Equity Letter, *supra* note 54; Coalition Letter, *supra* note 54; Old Mutual Letter, *supra* note 54; Second Aviva Letter, *supra* note 54. Southwest Letter, *supra* note 136; Transamerica Letter, *supra* note 54.

[237] *See, e.g.*, American National Letter, *supra* note 54; National Western Letter, *supra* note 54; Old Mutual Letter, *supra* note 54; Southwest Letter, *supra* note 136.

[238] *See infra* Section VII.

[239] *See generally* Black and Skipper, *supra* note 39, at 26–47, 890–99.

[240] *See, e.g.*, American Equity Letter, *supra* note 54; National Western Letter, *supra* note 54; Sammons Letter, *supra* note 54. The commenters did not provide cost estimates for performing the analysis necessary under the rule.

[241] *See, e.g.*, Aviva Letter, *supra* note 54; Academy Letter, *supra* note 54. We give substantial weight to the views of the Academy on this point, given their expertise in this type of analysis, and are not persuaded that the contrary comments of several issuers are representative of industry practice. *See* BLACK'S LAW DICTIONARY 39 (8th ed. 2004) (An actuary is a statistician who determines the present effects of future contingent events and who calculates insurance and pension rates on the basis of empirically based tables.); American Academy of Actuaries, Mission, available at: *http://www.actuary.org/mission.asp* (The mission of the Academy is to, among other things, provide independent and objective actuarial information, analysis, and education for the formation of sound public policy.).

[242] *See supra* Part IV.C.

[243] This cost increase is estimated by multiplying the total annual hour burden (60,000 hours) by the estimated hourly wage rate of $175 per hour. Consistent with recent rulemaking releases, we estimate the value of work performed by the company internally at a cost of $175 per hour.

[244] $10,500,000 (in-house personnel) + $72,000,000 (outside professionals).

[245] *See, e.g.*, Allianz Letter, *supra* note 54; Second Aviva Letter, *supra* note 54; Second NAFA Letter, *supra* note 191.

[246] Allianz Letter, *supra* note 54.

issuer that has not previously filed a Form S–1, with the commenter acknowledging that the costs to an experienced filer would be lower (as low as $50,000 to $100,000).[247] Another commenter estimated external legal costs for preparation and filing of a Form S–1 registration statement with the SEC at $350,000 for the first few years, which, the commenter stated, would decrease over time as the insurer gained more expertise.[248] Our average $180,000 estimate reflects outside professional costs incurred not only by first-time Form S–1 filers, but also the costs of preparing Form S–1 for contracts offered by experienced Form S–1 filers, as well as annual updates to existing Form S–1 registration statements, which we expect to be significantly lower than costs incurred by first-time filers. Therefore, we do not believe that it is necessary to change our estimate of outside professional costs based on the commenters' estimated costs.

One commenter cites a cost of $62,500 per insurance company for ''Registration Statement Preparation'' but also appears to assume a cost of $255,000 per contract for registration statement preparation.[249] It is unclear how these estimates should be reconciled, and we are not revising our estimate of the burden of preparation of registration statement on the basis of the commenter's estimates.

Another commenter stated that the Commission's estimate of outside professional costs of $400 per hour does not reflect market rates for securities counsel.[250] However, the commenter did not cite a different rate and did not explain the basis for its disagreement with the $400 per hour rate cited by the Commission. Our estimate of $400 per hour for outside professionals retained by the issuer is consistent with recent rulemakings and is based on discussions between our staff and several law firms.[251] Accordingly, we are not changing our estimate of the cost per hour of outside professional costs.

The commenter further stated that the estimates of time involved are low for persons unfamiliar with the process of registration of securities under the federal securities laws and the anticipated need for interaction with Commission staff. However, our estimate of time required to prepare a registration statement reflects time needed not only by first-time Form S–1 filers, but also the time involved in preparing Form S–1 for contracts offered by experienced S–1 filers, as well as annual updates to the existing Form S–1 registration statement, which we expect to be significantly less than time needed by first-time filers. Therefore, we are not revising our estimate of time involved in preparing registration statements on Form S–1.

Commenters stated that insurers will be subject to significant additional costs as a result of having to register on Form S–1.[252] These include required registration fees for securities sold. One commenter estimated Commission registration fees, assuming sales of $5 billion annually, as $196,500.[253] Commenters also stated that the due diligence necessary to verify disclosures in the registration statement will require significant resources.[254] We acknowledge that these are additional costs associated with registration. However, these costs are not unique to indexed annuities, but are incurred by all issuers of registered securities.

Commenters also cited other costs of registration on Form S–1, such as preparation of financial statements in accordance with generally accepted accounting principles (''GAAP''), which, according to the commenters, many insurers currently do not do.[255] One commenter estimated a cost of at least several million dollars for an insurer to develop GAAP financial statements.[256] We acknowledge that if an indexed annuity issuer that did not currently prepare GAAP financial statements were required to do so in order to register its indexed annuities, the one-time start-up costs could be significant. We note that, during the two-year transition period for rule 151A, the Commission intends to consider how to tailor accounting requirements for indexed annuities.[257]

Based on the foregoing analysis, our estimates of the costs of registration for indexed annuities include the costs of preparing Form S–1 registration statements, totaling $82,500,000 annually, or $206,250 per contract, and, based on a commenter's estimate, registration fees of $196,000 assuming sales by an insurer of $5 billion annually. If the insurer does not already prepare financial statements in accordance with GAAP, the insurer will also incur costs of developing GAAP financials, which one commenter estimated to involve one-time start-up costs of at least several million dollars per insurer. Commenters also mentioned due diligence as a cost of registration, but did not separately break out its cost.

Costs of Printing Prospectuses and Providing Them to Investors

Insurers will incur costs to print and provide prospectuses to investors for indexed annuities that are outside the insurance exemption as a result of rule 151A. For purposes of the PRA, we have estimated that registration statements will be filed for 400 indexed annuities per year. In the Proposing Release, we estimated that it would cost $0.35 to print each prospectus and $1.21 to mail each prospectus,[258] for a total of $1.56 per prospectus. These estimates would be reduced to the extent that prospectuses are delivered in person or electronically, or to the extent that Securities Act prospectuses are substituted for written materials used today, rather than being delivered in addition to those materials.

One commenter questioned whether the cost of printing an indexed annuity prospectus on Form S–1 would be roughly equivalent to that of printing a mutual fund prospectus on Form N–1A, as we were assuming for purposes of our estimate in the proposing release.[259] The commenter, based on its internal projections of prospectus printing and mailing costs, stated that the indexed annuity prospectus would cost twice as much as the mutual fund prospectus. The commenter estimated printing costs for an indexed annuity prospectus on Form S–1 as $1.50 and the cost of mailing as $1.38 for a total cost of $2.88. In making its cost projections, the commenter assumed that the mutual fund prospectus would be 25 pages

[247] *Id.*

[248] Second Aviva Letter, *supra* note 54.

[249] Second NAFA Letter, *supra* note 191.

[250] Transamerica Letter, *supra* note 54.

[251] *See, e.g.*, Securities Act Release No. 8909 (Apr. 10, 2008) [73 FR 20512, 20515 (Apr. 15, 2008)] (''Revisions to Form S–11 Release'').

[252] *See, e.g.*, Allianz Letter, *supra* note 54; American Equity Letter, *supra* note 54; Old Mutual Letter, *supra* note 54; Transamerica Letter, *supra* note 54.

[253] Allianz Letter, *supra* note 54.

[254] National Western Letter, *supra* note 54; Old Mutual Letter, *supra* note 54.

[255] *See, e.g.*, Allianz Letter, *supra* note 54. *See* Second Aviva Letter, *supra* note 54.

[256] Second Aviva Letter, *supra* note 54.

[257] *See supra* note 95 and accompanying text.

[258] These estimates reflect estimates provided to us by Broadridge Financial Solutions, Inc. (''Broadridge''), in connection with our recent proposal to create a summary prospectus for mutual funds. The estimates depend on factors such as page length and number of copies printed and not on the content of the disclosures. Because we believe that these factors may be reasonably comparable for indexed annuity and mutual fund prospectuses, we believe that it is reasonable to use these estimates in the context of indexed annuities. *See* Memorandum to File number S7–28–07 regarding October 27, 2007 meeting between Commission staff members and representatives of Broadridge Financial Solutions, Inc. (Nov. 28, 2007) (''Broadridge Memo''). The memorandum is available for inspection and copying in File No. S7–28–07 in the Commission's Public Reference Room and on the Commission's Web site at *http://www.sec.gov/comments/s7-28-07/s72807-5.pdf.*

[259] Allianz Letter, *note* 54.

long, while the indexed annuity prospectus (including financial statements) would be 100 pages long. Our estimate of the cost of printing and mailing a mutual fund prospectus was based on an assumed page length of 45 pages.[260] We believe that the commenter's estimate of page length may be more realistic for a prospectus prepared on Form S–1.[261] Accordingly, we are revising our estimate of the costs of printing and mailing the prospectus to the costs cited by the commenter; *i.e.*, $1.50 for printing the prospectus and $1.38 for mailing for a total cost of $2.88.[262] Though we have revised our estimate as described above, we believe that the revised estimate is conservative because some indexed annuity issuers who file Exchange Act reports and incorporate their financial statements from their Exchange Act reports by reference may have significantly shorter prospectuses as a result.[263]

Another commenter estimated the cost per insurance company of ''printing prospectuses/supply chain'' [264] at $20,000 per insurance company for a combined total of $880,000. The commenter does not explain how it arrived at this estimate. Moreover, because the commenter's estimate is for total cost per insurance company and does not specify the number of prospectuses printed by each insurance company, and our estimate is a per prospectus cost, we are not able to compare the two estimates. Thus, we are not revising our estimate of the cost of printing prospectuses and providing them to investors.

Networking Arrangements With Registered Broker-Dealers and Other Related Costs

Rule 151A may impose costs on indexed annuity distributors that are not currently parties to a networking arrangement or registered as broker-dealers. These costs are not unique to indexed annuity distributors but apply to all distributors of federally registered securities that are not registered broker-dealers. While these entities may choose to register as broker-dealers, in order to continue to distribute indexed annuities that are registered as securities, these distributors will likely enter into a networking arrangement with a registered broker-dealer. Under these arrangements, an affiliated or third-party broker-dealer provides brokerage services for an insurance agency's customers, in connection with transactions in insurance products that are also securities. Entering into a networking arrangement will impose costs associated with contracting with the registered broker-dealer regarding the terms, conditions, and obligations of each party to the arrangement. We anticipate that a distributor will incur legal costs in connection with entering into a networking arrangement with a registered broker-dealer, as well as ongoing costs associated with monitoring compliance with the terms of the networking arrangement. However, while there are costs of entering into a networking arrangement and monitoring compliance with the terms of the arrangement, distributors in networking arrangements will not be subject to the full range of costs associated with obtaining and maintaining broker-dealer registration.

One commenter estimated that the cost of registering as a broker-dealer, taking into account only the legal and regulatory work of initial setup,[265] licensing, and staffing could be between $250,000–$500,000.[266] Another commenter estimated the cost of forming a registered broker-dealer at $800,000.[267] The same commenter cites a cost of $3 million for ''BD startup'' in a separate comment.[268] As we discuss above, however, we believe it is more likely that distributors will enter into networking arrangements with registered broker-dealers, rather than register as broker-dealers.

Some commenters disagreed that distributors would enter into networking arrangements with registered broker-dealers, stating that the cost of networking would be too high.[269] One of these commenters stated that networking would be inordinately expensive.[270] The commenter stated that under current industry practice, a distributor would bear expenses when using a networking arrangement that include examination fees, state registration fees, and possibly a pro rata share of the associated broker-dealer's increased compliance costs, and would have to share a portion of his commissions with the registered broker-dealer.[271] Commenters did not provide estimates of the cost of networking. We recognize that a distributor will incur costs in entering into networking arrangement. We estimate the upper bound of entering into a networking agreement to be the equivalent of the cost of establishing a registered broker-dealer. Commenters provided a range of cost estimates for establishing a registered broker-dealer from $250,000 to $3 million. However, these costs are not unique to indexed annuities. For example, issuers of insurance products registered as securities, such as variable annuities, may incur networking costs, as do banks involved in networking arrangements. Moreover, while we would expect networking to be generally more cost-effective than registration as a broker-dealer, to the extent that it is not, broker-dealer

[260] Broadridge Memo, *supra* note 258.

[261] *See* Pre-effective Amendment No. 4 to Registration Statement on Form S–1 of PHL Variable Insurance Company (File No. 333–132399) (filed Feb. 7, 2007) (67-page prospectus); 257 Pre-effective Amendment No. 1 to Registration Statement on Form S–1 of Golden America Life Insurance Company (File No. 333–67660) (filed Feb. 8, 2002) (170-page prospectus).

[262] Allianz Letter, *supra* note 54. This revision does not affect our estimate of the cost burden for Form S–1 under the Paperwork Reduction Act. Printing and mailing costs are not ''collections of information'' for purposes of the Paperwork Reduction Act.

[263] *See* Pre-effective Amendment No. 4 to Registration Statement on Form S–1 of PHL Variable Insurance Company (File No. 333–132399) (filed Feb. 7, 2007) (20 pages of the prospectus are attributable to financial statements); Pre-effective Amendment No. 1 to Registration Statement on Form S–1 of Golden America Life Insurance Company (File No. 333–67660) (filed Feb. 8, 2002) (63 pages of the prospectus are attributable to financial statements).

[264] Second NAFA Letter, *supra* note 191. It is not fully clear what the commenter intends by ''supply chain,'' but we are citing the estimate, because it references printing of prospectuses.

[265] Allianz Letter, *supra* note 54. Initial setup includes registering the broker-dealer with the Commission, developing extensive written policies and procedures tailored to its business, obtaining a fidelity bond, registering its offices as branch offices, and setting up a procedure for a principal review of all applications, as well as review of advertisements, business cards, letterhead, office signage, correspondence, and e-mails.

[266] Allianz Letter, *supra* note 54.

[267] Memorandum from the Division of Investment Management Regarding a November 10, 2008 Meeting with Representatives of the National Association for Fixed Annuities (Nov. 26, 2008). One commenter stated that the costs of registering and operating as a broker-dealer include FINRA registration and examination fees of up to $4,000. The commenter further stated that the legal cost associated with registering and applying for membership with FINRA, the cost of completing the necessary forms, and the costs of ongoing compliance could result in start-up costs of $25,000 and between $50,000 to $100,000 annually to maintain the registration. Coalition Letter, *supra* note 54.

[268] Second NAFA Letter, *supra* note 191.

[269] *See, e.g.*, American Equity Letter, *supra* note 54; Coalition Letter, *supra* note 54.

[270] Coalition Letter, *supra* note 54.

[271] Coalition Letter, *supra* note 54. One commenter indicated its belief that insurance agencies are only permitted to enter into networking arrangements with affiliated broker-dealers. Therefore, the commenter stated that insurance agencies without an affiliated broker-dealer would not appear to be able to take advantage of networking arrangements. We disagree with the commenter's interpretation and note that, in our view, insurance agencies may enter into networking arrangements with unaffiliated broker-dealers.

registration remains an option for indexed annuity distributors.

Commenters also cited additional costs that agents will incur as a result of the rule.[272] For example, commenters cited annual securities registration and licensing fees, including FINRA fees and state securities fees, that agents would be required to pay. With regard to state registration fees, one commenter estimated that an agent selling in all 50 states would pay approximately $3,100 in initial state securities registration fees and nearly $3,000 annually in ongoing state securities fees.[273] We recognize that agents may incur additional registration and licensing costs and are sensitive to the impact of such costs. However, these fees are paid by all sellers of securities and are not unique to those selling indexed annuities. The fees are a product of the regulatory structure mandated by Congress under the federal securities laws, which is intended to provide sales practice and other protections to investors.

Several commenters cited an industry source that estimated loss to distributors as a result of the rule as approximately $800 million.[274] This source estimates that agents would lose about $200 million in income by having to share commissions with the broker-dealers with which the agent is associated. The source estimates that fees charged by the broker-dealer and by FINRA would amount to another $22.5 million. The sharing of commissions, as well as the fees charged by the broker-dealer and by FINRA are necessary expenses of selling registered securities. For marketing organizations, the source estimates that indexed annuity sales would drop by 60% and marketing organization compensation would be reduced from around $500 million-$700 million a year today to $60 million-$200 million as a result of the rule. However, the source does not explain the basis for the estimate of the decline in sales. Moreover, if the marketing organization registers as, or enters into a networking arrangement with, a broker-dealer, it would have opportunities to sell other types of securities, and may be able to compensate for any declines in sales of indexed annuities that may occur. We believe that even at the high end of costs suggested by commenters, given the imperative of the federal securities laws and the size of the industry, these costs are nonetheless justified.

Possible Loss of Revenue

Insurance companies that determine that indexed annuities are outside the insurance exemption under rule 151A could either choose to register those annuities under the Securities Act or to cease selling those annuities. If an insurer ceases selling such annuities, the insurer may experience a loss of revenue. Commenters agreed that some insurers may stop selling indexed annuities as a result of the rule and that they would experience a loss of revenue.[275] One commenter estimated a total first year loss to insurance companies of approximately $300,000,000 as a result of the rule.[276] The commenter argued that industry experts state indexed annuity sales will drop from approximately $30 billion of premium per year (projected for 2008) to $10 billion per year as a result of the rule.[277] However, the commenter does not explain how this estimate was determined. We believe that even at the high end of costs suggested by commenters, given the imperative of the federal securities laws and the size of the industry, these costs are nonetheless justified.

The amount of lost revenue for insurance companies would depend on actual revenues prior to effectiveness of the rules and to the particular determinations made by insurers regarding whether to continue to issue registered indexed annuities. However, the loss of revenue may be offset, in whole or in part, by gains in revenue from the sale of other financial products, as purchasers' need for financial products will not diminish. These gains could be experienced by the same insurers who exit the indexed annuity business or they could be experienced by other insurance companies or other issuers of securities or other financial products.

Commenters also stated that sellers of indexed annuities may lose revenue because rule 151A may cause them to cease selling these products.[278] One commenter estimated a first-year income loss to distributors of $1.5 billion, based on an estimated decline in indexed annuity sales from approximately $30 billion (projected for 2008) to $10 billion per year, as a result of the rule.[279]

The amount of lost revenue for sellers of indexed annuities would depend on actual revenues prior to effectiveness of the rules and to the particular determinations made by distributors regarding whether to continue to sell registered indexed annuities. The loss of revenue may be offset, in whole or in part, by gains in revenue from the sale of other financial products, as purchasers' need for financial products will not diminish.

Commenters also cited indirect or collateral costs associated with the rule.[280] For example, if insurers exit the indexed annuities business; this will result in a reduction in personnel of those who are no longer needed to administer the products.[281] Commenters also stated that if insurers chose to stop offering indexed annuities because of the rule, third-party service providers who helped support the administration and/or sale of the insurer's indexed annuities may also incur costs.[282]

A number of commenters cited job loss as a consequence of the rule. Loss of employment, these commenters argued, would affect current employees of insurance companies, agents, and others.[283] Demand for financial products is relatively fixed in the aggregate. Within the insurance industry, some employees of insurance companies and agents will likely find employment in other areas of the insurance industry.

Possible Diminished Competition

There could be costs associated with diminished competition as a result of our rules. In order to issue indexed annuities that are outside the insurance exemption under rule 151A, insurers would be required to register those annuities as securities. If some insurers determine to cease issuing indexed annuities rather than undertake the analysis required by rule 151A and register those annuities that are outside the insurance exemption under the rule,

[272] *See, e.g.*, Allianz Letter, *supra* note 54; Coalition Letter, *supra* note 54; Southwest Letter, *supra* note 136.

[273] Allianz Letter, *supra* note 54.

[274] Letter of Advisors Excel (Aug. 20, 2008); Coalition Letter, *supra* note 54; Letter of Courtney A. Juhl (Aug. 15, 2008), citing Jack Marrion, *The Proposed Rule Will Sock it to Index Annuity Distributors,* National Underwriter Life & Health/ Financial Services Edition, Aug. 4, 2008, at 13, available at: *http://www.lifeandhealthinsurancenews.com/cms/nulh/Weekly%20Issues/issues/2008/29/Focus/L29cover2.*

[275] *See, e.g.*, Allianz Letter, *supra* note 54; National Western, *supra* note 54.

[276] Second NAFA Letter, *supra* note 191.

[277] *Id.,* citing ''The Advantage Compendium, Jack Marrion, President.'' The commenter does not provide a specific citation, and we have been unable to find the source of the estimate provided by the commenter.

[278] *See, e.g.*, Second Old Mutual Letter, *supra* note 76; Southwest Letter, *supra* note 136.

[279] Second NAFA Letter, *supra* note 191. This commenter also estimated a first-year income loss of $300 million for independent marketing organizations.

[280] Allianz Letter, *supra* note 54; Aviva Letter, *supra* note 54; National Western Letter, *supra* note 54.

[281] *See, e.g.*, Allianz Letter, *supra* note 54.

[282] *See, e.g.*, Allianz Letter, *supra* note 54.

[283] *E.g.*, Letter of Todd F. Gregory (Aug. 5, 2008); Letter of Terry R. Lucas (Sept. 9, 2008); National Western Letter, *supra* note 54; Letter of Randall L. Whittle (Aug. 8, 2008).

there will be fewer issuers of indexed annuities, which may result in reduced competition. Any reduction in competition may affect investors through potentially less favorable terms of insurance products and other financial products, such as increases in direct or indirect fees. A number of commenters agreed that diminished competition would result in indexed annuity purchasers receiving less favorable terms. However, the commenters did not provide data in this regard.[284]

It is currently unknown whether new providers will enter the market for indexed annuities. We note, however, that the possibility for new entrants created by this rule is beneficial to competition, even if they do not enter the market. If the indexed annuity market becomes sufficiently uncompetitive and economic profits increase, new entrants will likely arrive, putting downward pressure on prices. Thus, any reduction in regulatory barriers to entry created by increased regulatory certainty can have the effect of increasing competition and reducing prices, a direct benefit to investors. It is currently unknown whether new providers will enter the market for indexed annuities. We note, however, that the possibility for new entrants created by this rule is beneficial to competition, even if they do not enter the market. If the indexed annuity market becomes sufficiently uncompetitive and economic profits increase, new entrants will likely arrive, putting downward pressure on prices. Thus, any reduction in regulatory barriers to entry created by increased regulatory certainty can have the effect of increasing competition and reducing prices, a direct benefit to investors.

Additional Costs

Commenters provided further information on costs for insurance companies. One commenter estimated a total first-year cost to insurance companies of $237,000,000.[285] Components of this cost are identified as broker-dealer startup, broker-dealer annual maintenance, new compliance costs, legal start-up costs, FINRA implementation, FINRA maintenance, state fees, Form S–1 fees, including registration statement preparation, state filing, annual audit, operations/administration/systems, printing prospectus supply chain, and additional fees paid to FINRA impacting product pricing. Much of these costs appear to be attributable to setting up a broker-dealer. As noted above, however, we do not believe that insurers would need to establish a broker-dealer to continue to sell indexed annuities. An insurer could make use of existing broker-dealers and avoid the costs of starting a broker-dealer. If those costs are avoided, the commenter's estimate could be reduced by at least $135,727,000 (the total cost attributable to the costs of starting a broker-dealer as estimated by the commenter). This still leaves a total first-year cost to insurance companies of over $100,000,000. We recognize this is a substantial cost. However, these costs are not unique to indexed annuities but are the costs of offering and selling any registered securities. All issuers of securities must incur such costs, and issuers of indexed annuities will not incur higher costs as a result of the rule than any other issuer of securities.

One commenter cited the cost that may be incurred if the insurer needs to find additional distributors as a result of existing distributors dropping out of the indexed annuity market because of the costs they would incur under the rule.[286] However, this is no different from any securities issuer, all of whom must use distribution channels subject to the federal securities laws.

The Commission has carefully considered the costs cited by the commenters. These include the costs that the commenters state will be incurred by insurers, distributors, and agents. We have also considered the collateral costs cited by the commenters, and the possibility of loss of employment cited by the commenters. While we have taken the costs of the rule into account, we also continue to believe that the rule will result in substantial benefits to indexed annuity purchasers, in the form of enhanced disclosure and sales practice protections, greater regulatory certainty for issuers and sellers of indexed annuities, enhanced competition, and relief from reporting obligations. While the costs of the rule may be significant, where an annuity contract is not entitled to the Section 3(a)(8) exemption, which we have concluded is the case with respect to certain indexed annuities, the federal securities laws apply, and participants in the indexed annuity market will need to bear the costs of compliance with the federal securities laws, as do any other participants in the securities markets. Furthermore, notwithstanding these costs, our rule imposes no greater costs than those imposed on other market participants who issue or sell securities.

VI. Consideration of Promotion of Efficiency, Competition, and Capital Formation; Consideration of Burden on Competition

Section 2(b) of the Securities Act[287] and Section 3(f) of the Securities Exchange Act[288] require the Commission, when engaging in rulemaking that requires it to consider or determine whether an action is necessary or appropriate in the public interest, to consider, in addition to the protection of investors, whether the action will promote efficiency, competition, and capital formation. Section 23(a)(2) of the Exchange Act[289] requires us, when adopting rules under the Exchange Act, to consider the impact that any new rule would have on competition. In addition, Section 23(a)(2) prohibits us from adopting any rule that would impose a burden on competition not necessary or appropriate in furtherance of the purposes of the Exchange Act.

A. Efficiency

For the following reasons, we believe that rule 151A will promote efficiency by extending the benefits of the disclosure and sales practice protections of the federal securities laws to indexed annuities that are more likely than not to provide payments that vary with the performance of securities.

The required disclosures will enable investors to make more informed investment decisions. As discussed above, disclosures that will be required for registered indexed annuities include information about costs (such as surrender charges); the method of computing indexed return (*e.g.*, applicable index, method for determining change in index, caps participation rates, spreads); minimum guarantees, as well as guarantees, or lack thereof, with respect to the method for computing indexed return; and benefits (lump sum, as well as annuity and death benefits). This information will be public and accessible to all investors, intermediaries, third party information providers, and others through the SEC's EDGAR system. Public availability of this information will be helpful to investors in making informed decisions about purchasing indexed annuities. The enhancement of investor decision-making that will result from the public availability of information about indexed annuities

[284] *See, e.g.*, American Equity, *supra* note 54; American National, *supra* note 54; National Western, *supra* note 54.

[285] Second NAFA Letter, *supra* note 191.

[286] *See, e.g.*, American Equity Letter, *supra* note 54.

[287] 15 U.S.C. 77b(b).

[288] 15 U.S.C. 78c(f).

[289] 15 U.S.C. 78w(a)(2).

will ultimately lead to more efficient capital allocation in the securities markets.

Investors will also receive the benefits of the sales practice protections, including a registered representative's obligation to make only recommendations that are suitable. Under the federal securities laws, persons effecting transactions in indexed annuities that fall outside the insurance exemption under rule 151A will be required to be registered broker-dealers or become associated persons of a broker-dealer. As a result, investors who purchase these indexed annuities after the effective date of rule 151A will receive the benefits associated with a registered representative's obligation to make only recommendations that are suitable. The registered representatives who sell registered indexed annuities will be subject to supervision by the broker-dealer with which they are associated. Both the selling broker-dealer and its registered representatives will be subject to the oversight of FINRA. The registered broker-dealers will also be required to comply with specific books and records, supervisory, and other compliance requirements under the federal securities laws, as well as be subject to the Commission's general inspections and, where warranted, enforcement powers. These sales practice protections will promote suitable recommendations to investors, which will lead to enhanced decision-making by investors and, ultimately, to greater efficiency in the securities markets.

Some commenters argued that rule 151A, as proposed, would not promote efficiency, because it would be duplicative of state insurance regulation of indexed annuities.[290] These commenters argued that disclosure and suitability concerns in connection with indexed annuity sales are already addressed by state insurance regulation, and further indicated that state insurance regulation is more closely tailored to indexed annuities than federal securities regulation.

We do not believe that these efforts, no matter how strong, can substitute for the federal securities law protections that apply to instruments that are regulated as securities. The federal securities laws were designed to provide uniform protections, with respect to both disclosure and sales practices, to investors in securities. State insurance laws, enforced by multiple regulators whose primary charge is the solvency of the issuing insurance company, cannot serve as an adequate substitute for uniform, enforceable investor protections provided by the federal securities laws. Indeed, at least one state insurance regulator acknowledged the developmental nature of state efforts and the lack of uniformity in those efforts.[291] Where the purchaser of an indexed annuity assumes the investment risk of an instrument that fluctuates with the securities markets, and the contract therefore does not fall within the Section 3(a)(8) exemption, the application of state insurance regulation, no matter how effective, is not determinative as to whether the contract is subject to the federal securities laws, which provide uniform and enforceable protections for investors. In addition, during the transition period between adoption and the effective date of rule 151A, we intend to consider how to tailor disclosure requirements for indexed annuities.

One commenter stated that the Commission cannot claim further efficiencies without a comprehensive consideration of the existing state law regulatory regime, the efficiencies that regime already realizes, and the respects in which that state regime falls short and further gains may be achieved by the Commission.[292] The commenter further stated that the proposal would only impose further costs and burdens on efficiency with no compensating benefit, adding an unnecessary, largely duplicative layer of federal requirements that were developed for securities and have not been tailored to annuity products and purchasers generally.[293] We disagree that the Commission must undertake a comprehensive consideration of the existing state law regulatory regime and that there are no benefits from the federal securities laws. Congress has determined that securities investors are entitled to the disclosure, antifraud, and sales practice protections of the federal securities laws. The burdens that are uniformly imposed on issuers and sellers of all types of securities are part of those laws, and it is not the Commission's role to reevaluate the efficiencies of that regulatory structure for each particular instrument that is a security.

B. Competition

We also anticipate that, because rule 151A will improve investors' ability to make informed investment decisions, it will lead to increased competition between issuers and sellers of indexed annuities, mutual funds, variable annuities, and other financial products, and increased competitiveness in the U.S. capital markets. The greater clarity that results from rule 151A also may enhance competition because insurers who may have been reluctant to issue indexed annuities, while their status was uncertain, may decide to enter the market. Similarly, registered broker-dealers who currently may be unwilling to sell unregistered indexed annuities because of their uncertain regulatory status may become willing to sell indexed annuities that are registered, thereby increasing competition among distributors of indexed annuities.

We have carefully considered the concerns raised by commenters, and we continue to believe that rule 151A will greatly enhance disclosures regarding indexed annuities. In addition to the specific benefits described above, we anticipate that these enhanced disclosures will also benefit the overall financial markets and their participants.

We anticipate that the disclosure of terms of indexed annuities will be broadly beneficial to investors, enhancing the efficiency of the market for indexed annuities through increased competition. Disclosure will make information on indexed annuity contracts, including terms, publicly available. Public availability of terms will better enable investors to compare indexed annuities and may focus attention on the price competitiveness of these products. It will also improve the ability of third parties to price contracts, giving purchasers a better understanding of the fees implicit in the products. We anticipate that third-party information providers may provide services to price or compare terms of different indexed annuities. Analogously, we note that public disclosure of mutual fund information has enabled third-party information aggregators to facilitate comparison of fees.[294] We believe that increasing the level of price transparency and the resulting competition through enhanced disclosure regarding indexed annuities would be beneficial to investors. It could also expand the size of the

[290] *See e.g.*, Coalition Letter, *supra* note 54; NAFA Letter, *supra* note 54. *But see* Washington State Letter, *supra* note 199 (noting its experience with variable annuities and synergy of complementary regulation by the insurance regulator focused on solvency and the securities regulator focused on investor protection).

[291] *See* Voss Letter, *supra* note 13 (proposing to accelerate NAIC efforts to strengthen the NAIC model laws affecting indexed annuity products and urge adoption by more of the member states).

[292] Coalition Letter, *supra* note 54.

[293] *Id.*

[294] *See, e.g.*, FINRA, Fund Analyzer, available at: *http://www.finra.org/fundanalyzer* (''FINRA Fund Analyzer'').

market, as investors may have increased confidence that indexed annuities are competitively priced.

The Commission believes that there could be costs associated with diminished competition as a result of rule 151A. As the commenters note, some insurance companies may stop issuing indexed annuities, and some broker-dealers and agents may determine not to sell indexed annuities. We recognize that the impact of rule 151A on competition may be mixed, but, on balance, we continue to believe that rule 151A will provide the benefits described above and has the potential to increase competition. In this regard, the demand for financial products is relatively fixed, in the aggregate. Any potential reduction in indexed annuities sold under the rule would likely correspond with an increase in the sale of other financial products, such as mutual funds or variable annuities. Thus, total reductions in competition may not be significant, when effects on the financial industry as a whole, including insurance companies together with other providers of financial instruments, are considered. Within the insurance industry, if some insurers cease selling indexed annuities, it is also likely that these insurers will sell other products through the same distribution channels, such as annuities with fixed interest rates.

We conclude, in any event, that the importance of providing the protections of the federal securities laws to indexed annuity purchasers is significant notwithstanding any burden on competition that may result from the operation of the rule. In addition, the rule will provide other benefits. It will bring about clarity in what has been an uncertain area of law. In addition, issuers and sellers of these products will no longer be subject to uncertainty and litigation risk with respect to the laws that are applicable.

Some commenters argued that regulation under the federal securities laws of indexed annuities will place them at a competitive disadvantage to variable annuities and mutual funds because the Commission's disclosure scheme is not tailored to these contracts.[295] Commenters cited a number of supposed defects, including the lack of a registration form that is well-suited to indexed annuities, questions about the appropriate method of accounting to be used by insurance companies that issue indexed annuities, and concerns about parity of the registration process vis-a-vis mutual funds.

We acknowledge that, as a result of indexed annuity issuers having historically offered and sold their contracts without complying with the federal securities laws, the Commission has not created specific disclosure requirements tailored to these products. This fact, though, is not relevant in determining whether indexed annuities are subject to the federal securities laws. The Commission has a long history of creating appropriate disclosure requirements for different types of securities, including securities issued by insurance companies, such as variable annuities and variable life insurance.[296] We note that we are providing a two-year transition period for rule 151A, and, during this period, we intend to consider how to tailor disclosure requirements for indexed annuities. We encourage indexed annuity issuers to work with the Commission during that period to address their concerns.

One commenter indicated that the rule creates a competitive disadvantage for indexed annuities to the advantage of fixed annuities and suggests that that the Commission improperly failed to consider competition between indexed and fixed annuities.[297] Fixed annuities do not involve assumption of significant investment risks by purchasers. By contrast, indexed annuities that fall outside the insurance exemption under rule 151A do impose significant investment risk on purchasers, and, like other securities, they require the protections of the federal securities laws. Securities and non-securities are subject to different regulatory regimes as a result of Congressional action; it is not the Commission's role to revisit that determination by Congress.

C. Capital Formation

We also anticipate that the increased market efficiency resulting from enhanced investor protections under rule 151A could promote capital formation by improving the flow of information among insurers that issue indexed annuities, the distributors of those annuities, and investors. Public availability of this information will be helpful to investors in making informed decisions about purchasing indexed annuities. The information will enhance investors' ability to compare various indexed annuities and also to compare indexed annuities with mutual funds, variable annuities, and other securities and financial products. The potential liability for materially false and misleading statements and omissions under the federal securities laws will provide additional encouragement for accurate, relevant, and complete disclosures by insurers that issue indexed annuities and by the broker-dealers who sell them.[298]

Some commenters criticized the Commission's consideration of whether the rule will promote capital formation.[299] One commenter specifically questioned whether the proposed rule would improve the flow of information with regard to indexed annuities, suggesting that the Commission should delineate where the states' current disclosure regime falls short, and how the rule would improve upon it, as well as how the benefits of the rule would exceed its costs.[300] We disagree. It is not our intention to question the effectiveness of state regulation. We continue to believe that applying the federal securities disclosure scheme to indexed annuities will enhance disclosure of information needed to make informed investment decisions. The information will enhance investors' abilities to compare various indexed annuities and also compare indexed annuities with mutual funds, variable annuities, and other securities and finanancial products. We believe that state insurance laws, enforced by multiple regulators whose primary charge is the solvency of the issuing insurance company, cannot serve as an adequate substitute for uniform, enforceable investor protections provided by the federal securities laws. At least one state regulator has acknowledged the developmental nature of state efforts and the lack of uniformity in those efforts.[301] Congress has prescribed a uniform federal regulatory scheme for securities having already weighed whether the federal securities laws are well-suited to securities. In addition, the courts have recognized that labeling a product as insurance does not remove it from the federal regulatory scheme.

The federal securities laws will further improve upon the state structure because of the Commission's long

[295] Allianz Letter, *supra* note 54; Sammons Letter, *supra* note 54; Second Aviva Letter, *supra* note 54.

[296] *See* Form N–4 [17 CFR 239.17b and 274.11c] (registration form for variable annuities); Form N–6 [17 CFR 239.17c and 274.11d] (registration form for variable life insurance).

[297] NAFA Letter, *supra* note 54.

[298] *See, e.g.*, Section 12(a)(2) of the Securities Act [15 U.S.C. 77l(a)(2)] (imposing liability for materially false or misleading statements in a prospectus or oral communication, subject to a reasonable care defense). *See also* Section 10(b) of the Exchange Act [15 U.S.C. 78j(b)]; rule 10b–5 under the Exchange Act [17 CFR 240.10b–5]; Section 17 of the Securities Act [15 U.S.C. 77q] (general antifraud provisions).

[299] *See, e.g.*, Coalition Letter, *supra* note 54; NAFA Letter, *supra* note 54.

[300] Coalition Letter, *supra* note 54.

[301] See Voss Letter, *supra* note 13.

history of creating appropriate disclosure requirements for different types of securities, including securities issued by insurance companies, such as variable annuities and variable life insurance,[302] the federal regulatory scheme's uniformity in application, the suitability requirements enforced by FINRA, as well as the Commission and FINRA's robust enforcement powers and the private remedies allowed under the federal securities laws.

Another commenter stated that the proposed rule would only promote capital formation if it resulted in increased sales of indexed annuities, and that the Commission has not analyzed the rule to the point where it can determine whether or not it will increase indexed annuity sales.[303] We strongly disagree that the correct measure of whether the rule will promote capital formation is if it results in increased sales of indexed annuities. We believe that capital formation would be enhanced through increased competition among indexed annuities and among indexed annuities and other financial products, such as variable annuities and mutual funds, and the innovation and better terms in indexed annuities for investors that may result from this competition. Better information leads to increased competition and greater investor confidence in markets which will in turn lead to willingness to invest and facilitate capital formation. Moreover, it is not possible to predict with certainty whether indexed annuity sales will themselves increase or decrease as a result of the rule. The Commission has taken both possibilities into account. In any event, we believe, first, that the importance of protecting purchasers of these products under the federal securities laws is significant notwithstanding any reduction in capital formation that may result from fewer sales of indexed annuities and second, that any such reduction is likely to be offset by an increase in capital formation through sales of other financial products.

Rule 12h–7 provides insurance companies with an exemption from Exchange Act reporting with respect to indexed annuities and certain other securities that are regulated as insurance under state law. We are adopting this exemption because the concerns that Exchange Act financial disclosures are intended to address are generally not implicated where an insurer's financial condition and ability to meet its contractual obligations are subject to oversight under state law and where there is no trading interest in an insurance contract. Accordingly, we believe that the exemption will improve efficiency by eliminating potentially duplicative and burdensome regulation relating to insurers' financial condition. Furthermore, we believe that rule 12h–7 will not impose any burden on competition. Rather, we believe that the rule will enhance competition among insurance products and between insurance products and other financial products because the exemption may encourage insurers to innovate and introduce a range of new insurance contracts that are securities, since the exemption will reduce the regulatory costs associated with doing so. We also anticipate that the innovations in product development could promote capital formation by providing new investment opportunities for investors.

VII. Final Regulatory Flexibility Analysis

This Final Regulatory Flexibility Analysis has been prepared in accordance with the Regulatory Flexibility Act.[304] It relates to the Commission's rule 151A that defines the terms ''annuity contract'' and ''optional annuity contract'' under the Securities Act of 1933 and rule 12h–7 that exempts insurance companies from filing reports under the Securities Exchange Act of 1934 with respect to indexed annuities and other securities that are registered under the Securities Act, subject to certain conditions, both of which we are adopting in this Release. The Initial Regulatory Flexibility Analysis (''IRFA'') which was prepared in accordance with 5 U.S.C. 603 was published in the Proposing Release.

A. Need For and Objectives of Rules

We are adopting the definition of the terms ''annuity contract'' and ''optional annuity contract'' to provide greater clarity with regard to the status of indexed annuities under the federal securities laws. We believe this will enhance investor protection and provide greater certainty to the issuers and sellers of these products with respect to their obligations under the federal securities laws. We are adopting the exemption from Exchange Act reporting because we believe that the concerns that periodic financial disclosures are intended to address are generally not implicated where an insurer's financial condition and ability to meet its contractual obligations are subject to oversight under state law and where there is no trading interest in an insurance contract.

B. Significant Issues Raised By Public Comment

In the Proposing Release, we requested comment on the number of small entity insurance companies, small entity distributors of indexed annuities, and any other small entities that may be affected by the rules, the existence or nature of the potential impact and how to quantify the impact of the rules. A number of commenters stated that costs and burdens arising from rule 151A would have a significant and adverse impact on small entities, such as small insurance distributors.[305] Commenters have estimated the number of small entities to be adversely affected by this rule to range from thousands to tens of thousands of small entities.[306] Insurance distributors that would be affected by the rule are not registered with the Commission. For that reason, we do not have information pertaining to the number of such distributors, or the number of small distributors. While commenters provided a range of numbers of small entities, they did not explain the basis for their estimates.

Some commenters stated that the estimate of the burden on small entities in the proposing release is understated.[307] In particular, one commenter stated that small entities among distributors who network with registered broker-dealers will incur not only legal and monitoring costs, as the Proposing Release recognized, but will also have to share commissions that they earn from the sales of indexed annuities.[308] While we did not specifically address sharing of commissions in the Proposing Release, we recognize that networking may cause small distributors to share commissions with registered broker-dealers. However, we continue to believe that networking may be more cost-effective than

[302] *See e.g.*, Form N–4 [17 CFR 239.17b and 274.11c] (registration form for variable annuities); Form N–6 [17 CFR 239.17c and 274.11d] (registration form for variable life insurance).

[303] NAFA Letter, *supra* note 54.

[304] 5 U.S.C. 604 *et seq.*

[305] *See, e.g.*, Letter A, *supra* note 76; Letter of Dennis Absher (Jul. 25, 2008) (''Absher Letter''); Letter of James Brenner (Jul. 7, 2008) (''Brenner Letter''); Letter E, *supra* note 76; Letter of Dustin R. Montgomery (Sep. 11, 2008) (''Montgomery Letter''); Letter of Raymond J. Ohlson, The Ohlson Group, Inc. (Jul. 22, 2008) (''Ohlson Letter''); Letter of Steven A Sewell (Aug. 25, 2008) (''Sewell Letter''); Letter of Donna Tupper (Sept. 11, 2009) (''Tupper Letter'').

[306] *See, e.g.*, Letter of Matthew Coleman (Jul. 11, 2008) (''Coleman Letter''); Letter of Bruce E. Dickes (Jul. 16, 2008) (''Dickes Letter''); Letter Type K (''Letter K''); Letter of Larry A. Kaufman (Aug. 27, 2008) (''Kaufman Letter''); Letter of Dejah F. LaMonte (Sep. 3, 2008) (''LaMonte Letter''); Letter of Kyle Mann (Sep. 9, 2008) (''Mann Letter'').

[307] *See, e.g.*, Coalition Letter, *supra* note 54.

[308] Coalition Letter, *supra* note 54.

registering as a broker-dealer. We recognize that a distributor will incur costs in entering into networking arrangement. However, these costs are not unique to indexed annuities. For example, issuers of insurance products registered as securities, such as variable annuities, may incur networking costs, as do banks involved in networking arrangements. Moreover, while we would expect networking to be generally more cost-effective than registration as a broker-dealer, to the extent that it is not more efficient, broker-dealer registration remains an option for indexed annuity distributors. We believe that the upper bound of the cost of entering into a networking agreement is the equivalent of the costs of establishing a registered broker-dealer. Commenters provided a range of cost estimates for establishing a registered broker-dealer, ranging from $250,000 to $3 million.

As discussed below, it is the view of the Commission that, despite any adverse impact to small entities that may result, rule 151A is a necessary measure for the protection of purchasers of indexed annuities. Rule 151A will result in significant benefits to indexed annuity purchasers, including federally mandated disclosure and sales practice protections. Moreover, rule 151A offers benefits to all entities, large and small, such as greater regulatory certainty with regard to the status of indexed annuities under the federal securities laws and enhance competition. We do not anticipate that rule 151A will impose different or additional burdens on small entities than those imposed on other small entities who issue or distribute securities. Commenters generally supported rule 12h–7 and did not raise any issues regarding the effect of rule 12h–7 on small entities.

C. Small Entities Subject to the Rules

The Commission's rules define ''small business'' and ''small organization'' for purposes of the Regulatory Flexibility Act for each of the types of entities regulated by the Commission.[309] Rule 0–10(a)[310] defines an issuer, other than an investment company, to be a ''small business'' or ''small organization'' for purposes of the Regulatory Flexibility Act if it had total assets of $5 million or less on the last day of its most recent fiscal year.[311] No insurers currently issuing indexed annuities are small entities.[312] In addition, no other insurers that would be covered by the Exchange Act exemption are small entities.[313]

While there are no small entities among the insurers who are subject to the new rules 151A and 12h–7, we note that there may be a substantial number of small entities among distributors of indexed annuities.[314] Rule 0–10(c)[315] states that the term ''small business'' or ''small organization,'' when referring to a broker-dealer that is not required to file audited financial statements prepared pursuant to rule 17a–5(d) under the Exchange Act,[316] means a broker or dealer that had total capital (net worth plus subordinated liabilities) of less than $500,000 on the last business day of the preceding fiscal year (or in the time that it has been in business, if shorter); and is not affiliated with any person (other than a natural person) that is not a small business or small organization. Rule 0–10(a)[317] states that the term ''small business'' or ''small organization,'' when used with reference to a ''person,'' other than an investment company, means a ''person'' that, on the last day of its most recent fiscal year, had total assets of $5 million or less.

D. Reporting, Recordkeeping, and Other Compliance Requirements

Rule 151A will result in Securities Act filing obligations for those insurance companies that, in the future, issue indexed annuities that fall outside the insurance exemption under rule 151A, and rule 12h–7 will result in the elimination of Exchange Act reporting obligations for those insurance companies that meet the conditions to the exemption. As noted above, no insurance companies that currently issue indexed annuities or that would be covered by the exemption are small entities.

However, rule 151A may affect indexed annuity distributors that are small entities and that are not currently parties to a networking arrangement or registered as broker-dealers. While these entities may choose to register as broker-dealers, in order to continue to distribute indexed annuities that are registered as securities, these distributors would likely enter into a networking arrangement with a registered broker-dealer. Under these arrangements, an affiliated or third-party broker-dealer provides brokerage services for an insurance agency's customers, in connection with transactions in insurance products that are also securities. Entering into a networking arrangement would impose costs associated with contracting with the registered broker-dealer regarding the terms, conditions, and obligations of each party to the arrangement. We anticipate that a distributor will incur legal costs in connection with entering into a networking arrangement with a registered broker-dealer, as well as ongoing costs associated with monitoring compliance with the terms of the networking arrangement.[318] Entities that enter into such networking arrangements would not be subject to ongoing reporting, recordkeeping, or other compliance requirements imposed by the federal securities laws. If any of these entities were to choose to register as broker-dealers as a result of rule 151A,[319] they would be subject to ongoing reporting, recordkeeping, and other compliance requirements applicable to registered broker-dealers. Compliance with these requirements, if

[309] *See* rule 157 under the Securities Act [17 CFR 230.157]; rule 0–10 under the Exchange Act [17 CFR 240.0–10].

[310] 17 CFR 240.0–10(a).

[311] Securities Act rule 157(a) [17 CFR 157(a)] generally defines an issuer, other than an investment company, to be a ''small business'' or ''small organization'' for purposes of the Regulatory Flexibility Act if it had total assets of $5 million or less on the last day of its most recent fiscal year and it is conducting or proposing to conduct a securities offering of $5 million or less. For purposes of our analysis, however, we use the Exchange Act definition of ''small business'' or ''small entity'' because that definition includes more issuers than does the Securities Act definition and, as a result, assures that the definition we use would not itself lead to an understatement of the impact of the amendments on small entities.

[312] The staff has determined that each insurance company that currently offers indexed annuities has total assets significantly in excess of $5 million. The staff compiled a list of indexed annuity issuers from four sources: AnnuitySpecs, Carrier List, *http://www.annuityspecs.com/Page.aspx?s=carrierlist;* Annuity Advantage, Equity Indexed Annuity Data, *http://www.annuityadvantage.com/annuitydataequity.htm;* Advantage Compendium, Current Rates, *http://www.indexannuity.org/rates_by_carrier.htm;* and a search of Best's Company Reports (available on Lexis) for indexed annuity issuers. The total assets of each insurance company issuer of indexed annuities were determined by reviewing the most recent Best's Company Reports for each indexed annuity issuer.

[313] The staff has determined that each insurance company that currently offers contracts that are registered under the Securities Act and that include so-called market value adjustment features or guaranteed benefits in connection with assets held in an investor's account has total assets significantly in excess of $5 million. The total assets of each such insurance company were determined by reviewing the Form 10–K of that company and, in some cases, Best's Company Reports (available on Lexis).

[314] *See supra* note 306 and accompanying text.

[315] 17 CFR 240.0–10(c).

[316] 17 CFR 240.17a–5(d).

[317] 17 CFR 240.0–10(a).

[318] *See* discussion *supra* Part V.B. The costs borne by distributors entering into networking arrangements will be borne by both large and small distributors of registered indexed annuities.

[319] *See, e.g.*, Submission for OMB Review; Comment Request, OMB Control No. 3235–0012 [72 FR 39646 (Jul. 19, 2007)] (discussing the total annual burden imposed by Form BD).

applicable, would impose costs associated with accounting, legal, and other professional personnel, and the design and operation of automated and other compliance systems.[320]

E. Commission Action To Minimize Effect on Small Entities

The Regulatory Flexibility Act directs us to consider significant alternatives that would accomplish the stated objective, while minimizing any significant adverse impact on small entities. In connection with the adoption of rule 151A and rule 12h–7, we considered the following alternatives:

- Establishing different compliance or reporting requirements or timetables that take into account the resources available to small entities;
- Further clarifying, consolidating, or simplifying the requirements for small entities;
- Using performance standards rather than design standards; and
- Providing an exemption from the requirements, or any part of them, for small entities.

Because no insurers that currently issue indexed annuities or that will be covered by the Exchange Act exemption are small entities, consideration of these alternatives for those insurance companies is not applicable. Small distributors of indexed annuities that choose to enter into networking arrangements with registered broker-dealers, which we believe will be likely once rule 151A is adopted, would not be subject to ongoing reporting, recordkeeping, or other compliance requirements. However, because some small distributors may choose to register as broker-dealers, we did consider the alternatives above for small distributors.

Commenters did not suggest any alternatives specifically addressed to small entities. Some commenters suggested that the Commission, instead of adopting a rule that defines certain indexed annuities as not being ''annuity contracts'' under Section 3(a)(8), should instead define a safe harbor that would provide that indexed annuities that meet certain conditions are entitled to the Section 3(a)(8) exemption.[321] We are not adopting this approach for two reasons. First, such a rule would not address in any way the federal interest in providing investors with disclosure, antifraud, and sales practice protections that arise when individuals are offered indexed annuities that expose them to investment risk. A safe harbor would address circumstances where purchasers of indexed annuities are not entitled to the protections of the federal securities laws; one of our primary goals is to address circumstances where purchasers of indexed annuities are entitled to the protections of the federal securities laws. We are concerned that many purchasers of indexed annuities today should be receiving the protections of the federal securities laws, but are not. Rule 151A addresses this problem; a safe harbor rule would not. Second, we believe that, under many of the indexed annuities that are sold today, the purchaser bears significant investment risk and is more likely than not to receive a fluctuating, securities-linked return. In light of that fact, we believe that is far more important to address this class of contracts with our definitional rule than to address the remaining contracts, or some subset of those contracts, with a safe harbor rule.

The Commission believes that different registration, compliance, or reporting requirements or timetables for small entities that distribute registered indexed annuities would not be appropriate or consistent with investor protection. The rules will provide investors with the sales practice protections of the federal securities laws when they purchase indexed annuities that are outside the insurance exemption. These indexed annuities would be required to be distributed by a registered broker-dealer. As a result, investors who purchase these indexed annuities after the effective date of rule 151A would receive the benefits associated with a registered representative's obligation to make only recommendations that are suitable. The registered representatives who sell registered indexed annuities would be subject to supervision by the broker-dealer with which they are associated, and the selling broker-dealers would be subject to the oversight of FINRA. The registered broker-dealers would also be required to comply with specific books and records, supervisory, and other compliance requirements under the federal securities laws, as well as to be subject to the Commission's general inspections and, where warranted, enforcement powers.

Different registration, compliance, or reporting requirements or timetables for small entities that distribute indexed annuities may create the risk that investors will receive lesser sales practice and other protections when they purchase a registered indexed annuity through a distributor that is a small entity. We believe that it is important for all investors that purchase indexed annuities that are outside the insurance exemption to receive equivalent protections under the federal securities laws, without regard to the size of the distributor through which they purchase. For those same reasons, the Commission also does not believe that it would be appropriate or consistent with investor protection to exempt small entities from the broker-dealer registration requirements when those entities distribute indexed annuities that fall outside of the insurance exemption under our rules.

Through our existing requirements for broker-dealers, we have endeavored to minimize the regulatory burden on all broker-dealers, including small entities, while meeting our regulatory objectives. Small entities that distribute indexed annuities that are outside the insurance exemption under our rule should benefit from the Commission's reasoned approach to broker-dealer regulation to the same degree as other entities that distribute securities. In our existing broker-dealer regulatory framework, we have endeavored to clarify, consolidate, and simplify the requirements applicable to all registered broker-dealers, and the rules do not change those requirements in any way. Finally, we do not consider using performance rather than design standards to be consistent with investor protection in the context of broker-dealer registration, compliance, and reporting requirements.

VIII. Statutory Authority

The Commission is adopting the amendments outlined above under Sections 3(a)(8) and 19(a) of the Securities Act [15 U.S.C. 77c(a)(8) and 77s(a)] and Sections 12(h), 13, 15, 23(a), and 36 of the Exchange Act [15 U.S.C. 78*l*(h), 78m, 78o, 78w(a), and 78mm].

List of Subjects in 17 CFR Parts 230 and 240

Reporting and recordkeeping requirements, Securities.

Text of Rules

■ For the reasons set forth in the preamble, the Commission amends Title 17, Chapter II, of the Code of Federal Regulations as follows:

[320] *See supra* notes 265–268 and accompanying text.

[321] *See, e.g.*, Academy Letter, *supra* note 54; AIG Letter, *supra* note 128; Aviva Letter, *supra* note 54; Second Academy Letter, *supra* note 54; Second Aviva Letter, *supra* note 54; Second Transamerica Letter, *supra* note 54; Letter of Life Insurance Company of the Southwest (Sept. 10, 2008) (''Southwest Letter''); Voss Letter, *supra* note 13.

PART 230—GENERAL RULES AND REGULATONS, SECURITIES ACT OF 1933

■ 1. The authority citation for Part 230 continues to read in part as follows:

Authority: 15 U.S.C. 77b, 77c, 77d, 77f, 77g, 77h, 77j, 77r, 77s, 77z–3, 77sss, 78c, 78d, 78j, 78*l*, 78m, 78n, 78o, 78t, 78w, 78*ll*(d), 78mm, 80a–8, 80a–24, 80a–28, 80a–29, 80a–30, and 80a–37, unless otherwise noted.

* * * * *

■ 2. Add § 230.151A to read as follows:

§ 230.151A Certain contracts not ''annuity contracts'' or ''optional annuity contracts'' under section 3(a)(8).

(a) *General.* Except as provided in paragraph (c) of this section, a contract that is issued by a corporation subject to the supervision of the insurance commissioner, bank commissioner, or any agency or officer performing like functions, of any State or Territory of the United States or the District of Columbia, and that is subject to regulation under the insurance laws of that jurisdiction as an annuity is not an ''annuity contract'' or ''optional annuity contract'' under Section 3(a)(8) of the Securities Act (15 U.S.C. 77c(a)(8)) if:

(1) The contract specifies that amounts payable by the issuer under the contract are calculated at or after the end of one or more specified crediting periods, in whole or in part, by reference to the performance during the crediting period or periods of a security, including a group or index of securities; and

(2) Amounts payable by the issuer under the contract are more likely than not to exceed the amounts guaranteed under the contract.

(b) *Determination of amounts payable and guaranteed.* In making the determination under paragraph (a)(2) of this section:

(1) Amounts payable by the issuer under the contract and amounts guaranteed under the contract shall be determined by taking into account all charges under the contract, including, without limitation, charges that are imposed at the time that payments are made by the issuer; and

(2) A determination by the issuer at or prior to issuance of the contract shall be conclusive, provided that:

(i) Both the methodology and the economic, actuarial, and other assumptions used in the determination are reasonable;

(ii) The computations made by the issuer in support of the determination are materially accurate; and

(iii) The determination is made not more than six months prior to the date on which the form of contract is first offered.

(c) *Separate accounts.* This section does not apply to any contract whose value varies according to the investment experience of a separate account.

PART 240—GENERAL RULES AND REGULATIONS, SECURITIES EXCHANGE ACT OF 1934

■ 3. The authority citation for Part 240 continues to read in part as follows:

Authority: 15 U.S.C. 77c, 77d, 77g, 77j, 77s, 77z–2, 77z–3, 77eee, 77ggg, 77nnn, 77sss, 77ttt, 78c, 78d, 78e, 78f, 78g, 78i, 78j, 78j–1, 78k, 78k–1, 78*l*, 78m, 78n, 78o, 78p, 78q, 78s, 78u–5, 78w, 78x, 78*ll*, 78mm, 80a–20, 80a–23, 80a–29, 80a–37, 80b–3, 80b–4, 80b–11, and 7201 *et seq.* ; and 18 U.S.C. 1350, unless otherwise noted.

* * * * *

■ 4. Add § 240.12h–7 to read as follows:

§ 240.12h–7 Exemption for issuers of securities that are subject to insurance regulation.

An issuer shall be exempt from the duty under section 15(d) of the Act (15 U.S.C. 78o(d)) to file reports required by section 13(a) of the Act (15 U.S.C. 78m(a)) with respect to securities registered under the Securities Act of 1933 (15 U.S.C. 77a *et seq.*), provided that:

(a) The issuer is a corporation subject to the supervision of the insurance commissioner, bank commissioner, or any agency or officer performing like functions, of any State;

(b) The securities do not constitute an equity interest in the issuer and are either subject to regulation under the insurance laws of the domiciliary State of the issuer or are guarantees of securities that are subject to regulation under the insurance laws of that jurisdiction;

(c) The issuer files an annual statement of its financial condition with, and is supervised and its financial condition examined periodically by, the insurance commissioner, bank commissioner, or any agency or officer performing like functions, of the issuer's domiciliary State;

(d) The securities are not listed, traded, or quoted on an exchange, alternative trading system (as defined in § 242.300(a) of this chapter), inter-dealer quotation system (as defined in § 240.15c2–11(e)(2)), electronic communications network, or any other similar system, network, or publication for trading or quoting;

(e) The issuer takes steps reasonably designed to ensure that a trading market for the securities does not develop, including, except to the extent prohibited by the law of any State or by action of the insurance commissioner, bank commissioner, or any agency or officer performing like functions of any State, requiring written notice to, and acceptance by, the issuer prior to any assignment or other transfer of the securities and reserving the right to refuse assignments or other transfers at any time on a non-discriminatory basis; and

(f) The prospectus for the securities contains a statement indicating that the issuer is relying on the exemption provided by this rule.

January 8, 2009.

By the Commission.

Elizabeth M. Murphy,

Secretary.

Opening Remarks and Dissent by Commissioner Troy A. Paredes

Regarding Final Rule 151A: Indexed Annuities and Certain Other Insurance Contracts

Open Meeting of the Securities & Exchange Commission

December 17, 2008

Thank you, Chairman Cox.

I believe that proposed Rule 151A addressing indexed annuities is rooted in good intentions. For instance, at the time the rule was proposed, the Commission watched a television clip from *Dateline NBC* that described individuals who may have been misled by seemingly unscrupulous sales practices into buying these products. Part of our tripartite mission at the SEC is to protect investors, so there is a natural tendency to want to act when we hear stories like this.

However, our jurisdiction is limited; and thus our authority to act is circumscribed. Rule 151A is about this very question: The proper scope of our statutory authority.

In our effort to protect investors, we cannot extend our reach past the statutory stopping point. Section 3(a)(8) of the Securities Act of 1933 ('33 Act) provides a list of securities that are exempt from the '33 Act and thus, by design of the statute, fall beyond the Commission's reach. The Section 3(a)(8) exemption includes, in relevant part, ''[a]ny insurance or endowment policy or annuity contract or optional annuity contract, issued by a corporation subject to the supervision of the insurance commissioner * * * of any State or Territory of the United States or the District of Columbia.'' I am not persuaded that Rule 151A represents merely an attempt to provide clarification to the scope of exempted securities falling within Section 3(a)(8). Instead, by defining indexed annuities in the manner done in Rule 151A, I believe the SEC will be entering into a realm that Congress prohibited us from entering. Therefore, I cannot vote in favor of the rule and respectfully dissent.

Rule 151A takes some annuity products (indexed annuities), which otherwise may be covered by the statutory exemption in Section 3(a)(8), and removes them from the exemption, thus placing them within the Commission's jurisdiction to regulate. If the Commission's Rule 151A analysis is wrong—which is to say that indexed annuities do fall

within Section 3(a)(8)—then the SEC has exceeded its authority by seeking to regulate them. In other words, the effect of Rule 151A would be to confer additional authority upon the SEC when these products, in fact, are entitled to the Section 3(a)(8) exemption.

The Supreme Court has twice construed the scope of Section 3(a)(8) for annuity contracts in the *VALIC* and *United Benefit* cases.[1] I believe the approach embraced by Rule 151A conflicts with these Supreme Court cases. Although neither *VALIC* nor *United Benefit* deals with indexed annuities directly, the cases nevertheless are instructive in evaluating whether such a product falls within the Section 3(a)(8) exemption. And despite the adopting release's efforts to discount its holding, at least one federal court applying *VALIC* and *United Benefit* has held that an indexed annuity falls within the statutory exemption of Section 3(a)(8).[2]

When fixing the contours of Section 3(a)(8), the relevant features of the product at hand should be considered to determine whether the product falls outside the Section 3(a)(8) exemption. Rule 151A places singular focus on investment risk without adequately considering another key factor—namely, the manner in which an indexed annuity is marketed.

Moreover, I believe that Rule 151A misconceptualizes investment risk for purposes of Section 3(a)(8). The extent to which the purchaser of an indexed annuity bears investment risk is a key determinant of whether such a product is subject to the Commission's jurisdiction. Rule 151A denies an indexed annuity the Section 3(a)(8) exemption when it is ''more likely than not'' that, because of the performance of the linked securities index, amounts payable to the purchaser of the annuity contract will exceed the amounts the insurer guarantees the purchaser. This approach to investment risk gives short shrift to the guarantees that are a hallmark of indexed annuities. In other words, the central insurance component of the product eludes the Rule 151A test. More to the point, Rule 151A in effect treats the possibility of upside, beyond the guarantee of principal and the guaranteed minimum rate of return the purchaser enjoys, as investment risk under Section 3(a)(8). I believe that it is more appropriate to emphasize the extent of downside risk—that is, the extent to which an investor is subject to a risk of loss—in determining the scope of Section 3(a)(8). When investment risk is properly conceived of in terms of the risk of loss, it becomes apparent why indexed annuities may fall within Section 3(a)(8) and thus beyond this agency's reach, contrary to Rule 151A.

Not only does Rule 151A seem to deviate from the approach taken by courts, including the Supreme Court, but it also appears to depart from prior positions taken by the Commission. For example, in an amicus brief filed with the Supreme Court in the *Otto* case,[3] the Commission asserted that the Section 3(a)(8) exemption applies when an insurance company, regulated by the state, assumes a ''sufficient'' share of investment risk and there is a corresponding decrease in the risk to the purchaser, such as where the purchaser benefits from certain guarantees. Yet Rule 151A denies the Section 3(a)(8) exemption to an indexed annuity issued by a state-regulated insurance company that bears substantial risk under the annuity contract by guaranteeing principal and a minimum return.

In addition, Rule 151A seems to diverge from the analysis embedded in Rule 151. Rule 151 establishes a true safe harbor under Section 3(a)(8) and provides that a variety of factors should be considered, such as marketing techniques and the availability of guarantees. The Rule 151 adopting release even indicates that the rule allows for certain ''indexed excess interest features'' without the product falling outside the safe harbor.

An even more critical difference between Rule 151 and Rule 151A is the effect of failing to meet the requirements under the rule. If a product does not meet the requirements of Rule 151, there is no safe harbor, but the product nevertheless may fall within Section 3(a)(8) and thus be an exempted security. But if a product does not pass muster under the Rule 151A ''more likely than not'' test, then the product is deemed to fall outside Section 3(a)(8) and thus is under the SEC's jurisdiction. In essence, while Rule 151 provides a safe harbor, Rule 151A takes away the Section 3(a)(8) statutory exemption.

I am not aware of another instance in the federal securities laws where a ''more likely than not'' test is employed, and for good reason. A ''more likely than not'' test does not provide insurers with proper notice of whether their products fall within the federal securities laws or not. If an insurer applies the test in good faith and gets it wrong, the insurer nonetheless risks being subject to liability under Section 5 of the Securities Act, even if the insurer had no intent to run afoul of the federal securities laws. In addition, under the ''more likely than not'' test, the availability of the Section 3(a)(8) exemption turns on the insurer's own analysis. Accordingly, it is at least conceivable that the same product could receive different Section 3(a)(8) treatment depending on how each respective insurer modeled the likely returns.

Further, I am concerned that Rule 151A, as applied, reveals that the ''more likely than not'' test, despite its purported balance, leads to only one result: The denial of the Section 3(a)(8) exemption. In practice, Rule 151A appears to result in blanket SEC regulation of the entire indexed annuity market. The adopting release indicates that over 300 indexed annuity contracts were offered in 2007 and explains that the Office of Economic Analysis has determined that indexed annuity contracts with typical features would not meet the Rule 151A test. Indeed, the adopting release elsewhere expresses the expectation that almost all indexed annuity contracts will fail the test. If everyone is destined to fail, what is the purpose of a test? Further, there is at least some risk that in sweeping up the index annuity market, the rule may sweep up other insurance products that otherwise should fall within Section 3(a)(8).

The rule has other shortcomings, aside from the legal analysis that underpins it. These include, but are not limited to, the following.

First, a range of state insurance laws govern indexed annuities. I am disappointed that the rule and adopting release make an implicit judgment that state insurance regulators are inadequate to regulate these products. Such a judgment is beyond our mandate or our expertise. In any event, Section 3(a)(8) does not call upon the Commission to determine whether state insurance regulators are up to the task; rather, the section exempts annuity contracts subject to state insurance regulation.

Second, as a result of Rule 151A, insurers will have to bear various costs and burdens, which, importantly, could disproportionately impact small businesses. Some even have predicted that companies may be forced out of business if Rule 151A is adopted. Such an outcome causes me concern, especially during these difficult economic times. Even when the economy is not strained, such an outcome is disconcerting because it can lead to less competition, ultimately to the detriment of consumers.

Third, the Commission received several thousand comment letters since Rule 151A was proposed in June 2008. Consistent with comments we have received, I believe that there are more effective and appropriate ways to address the concerns underlying this rulemaking. One possible alternative to Rule 151A would be amending Rule 151 to establish a more precise safe harbor in light of all the relevant facts and circumstances attendant to indexed annuities and how they are marketed. A more precise safe harbor would provide better clarity and certainty in this area—regulatory goals the Commission has identified—and would preserve the ability of insurers to find an exemption outside the safe harbor by relying directly on Section 3(a)(8) and the cases interpreting it. I believe further exploration of alternative approaches is warranted, as is continued engagement with interested parties, including state regulators.

In closing, I request that my remarks be included in the **Federal Register** with the final version of the release. My remarks today do not give a full exposition of the rule's shortcomings, but rather highlight some of the key points that lead me to dissent. I wish to note that these dissenting remarks just given represent my view after giving careful consideration to the range of arguments presented by the Commission's staff, particularly the Office of General Counsel, the commenters, and my own counsel, as well as those of my fellow Commissioners. Although I cannot support the rule, I nonetheless thank the staff for the hard work they have devoted to its preparation.

[FR Doc. E9–597 Filed 1–15–09; 8:45 am]

BILLING CODE 8011–01–P

[1] *See generally SEC* v. *Variable Annuity Life Ins. Co. of Am.,* 359 U.S. 65 (1959); *SEC v. United Benefit Life Ins. Co.,* 387 U.S. 202 (1967).

[2] *See Malone* v. *Addison Ins. Mktg., Inc.,* 225 F. Supp. 2d 743 (W.D. Ky. 2002).

[3] *Otto v. Variable Annuity Life Ins. Co.,* 814 F.2d 1127 (7th Cir. 1987). The Supreme Court denied the petition for a writ of certiorari.

Federal Register

Friday,
January 16, 2009

Part III

Department of Commerce

National Oceanic and Atmospheric Administration

50 CFR Part 600

Magnuson-Stevens Act Provisions; Annual Catch Limits; National Standard Guidelines; Final Rule

DEPARTMENT OF COMMERCE

National Oceanic and Atmospheric Administration

50 CFR Part 600

[Docket No. 070717348–81398–03]

RIN 0648–AV60

Magnuson-Stevens Act Provisions; Annual Catch Limits; National Standard Guidelines

AGENCY: National Marine Fisheries Service (NMFS); National Oceanic and Atmospheric Administration (NOAA); Commerce.

ACTION: Final rule.

SUMMARY: This final action amends the guidelines for National Standard 1 (NS1) of the Magnuson-Stevens Fishery Conservation and Management Act (MSA). This action is necessary to provide guidance on how to comply with new annual catch limit (ACL) and accountability measure (AM) requirements for ending overfishing of fisheries managed by Federal fishery management plans (FMPs). It also clarifies the relationship between ACLs, acceptable biological catch (ABC), maximum sustainable yield (MSY), optimum yield (OY), and other applicable reference points. This action is necessary to facilitate compliance with requirements of the Magnuson-Stevens Act to end and prevent overfishing, rebuild overfished stocks and achieve OY.

DATES: Effective February 17, 2009.

ADDRESSES: Copies of the Regulatory Impact Review (RIR)/Regulatory Flexibility Act Analysis (RFAA) can be obtained from Mark R. Millikin, National Marine Fisheries Service, 1315-East-West Highway, Room 13357, Silver Spring, Maryland 20910. The RIR/RFAA document is also available via the internet at *http://www.nmfs.noaa.gov/msa2007/catchlimits.htm*. Public comments that were received can be viewed at the Federal e-Rulemaking portal: *http://www.regulations.gov.*

FOR FURTHER INFORMATION CONTACT: Mark R. Millikin by phone at 301–713–2341, by FAX at 301–713–1193, or by *e-mail: Mark.Millikin@noaa.gov.*

SUPPLEMENTARY INFORMATION:

Table of Contents

I. Overview of Revisions to the NS1 Guidelines
II. Major Components of the Proposed Action
III. Major Changes Made in the Final Action
IV. Overview of the Major Aspects of the Final Action
A. Stocks in the Fishery and Ecosystem Component Species
B. Definition Framework for OFL, ABC, and ACL
C. Accountability Measures (AMs)
D. SSC Recommendations and Process
E. Management Uncertainty and Scientific Uncertainty
V. Response to Comments
VI. Changes from Proposed Action
VII. References Cited
VIII. Classification

I. Overview of Revisions to the NS1 Guidelines

The MSA serves as the chief authority for fisheries management in the U.S. Exclusive Economic Zone (EEZ). The Act provides for ten national standards (NS) for fishery conservation and management, and requires that the Secretary establish advisory guidelines based on the NS to assist in the development of fishery management plans. Guidelines for the NS are codified in subpart D of 50 CFR part 600. NS1 requires that conservation and management measures ''shall prevent overfishing while achieving, on a continuing basis, the optimum yield from each fishery for the United States fishing industry.''

The Magnuson-Stevens Fishery Conservation and Management Reauthorization Act of 2006 (MSRA) amended the MSA to include new requirements for annual catch limits (ACLs) and accountability measures (AMs) and other provisions regarding preventing and ending overfishing and rebuilding fisheries. To incorporate these new requirements into current NS1 guidance, NMFS initiated a revision of the NS1 guidelines in 50 CFR 600.310. NMFS published a notice of intent (NOI) to prepare an environmental impact statement (EIS) and commenced a scoping period for this action on February 14, 2007 (72 FR 7016), and proposed NS1 guidelines revisions on June 9, 2008 (73 FR 32526). Further background is provided in the above-referenced **Federal Register** documents and is not repeated here. The proposed guidelines provided a description of the reasons that overfishing is still occurring and the categories of reasons for overfishing likely to be addressed by new MSA requirements combined with the NS1 guidelines. The September 30, 2008 NMFS Quarterly Report on the Status of U.S. Fisheries indicates that 41 stocks managed under Federal FMPs are undergoing overfishing.

NMFS solicited public comment on the proposed NS1 guidelines revisions through September 22, 2008, and during that time, held three public meetings, on July 10, 2008 (Silver Spring, Maryland), July 14, 2008 (Tampa, Florida), and July 24, 2008 (Seattle, Washington), and made presentations on the proposed revisions to each of the eight Regional Fishery Management Councils (Councils). NMFS received over 158,000 comments on all aspects of the proposed NS1 guidelines revisions. Many of the comment letters were form letters or variations on a form letter. In general, the environmental community supported the provisions in the proposed action but commented that they needed to be strengthened in the final action. Alternatively, comments from the fishing industry and some of the Councils said the proposed revisions were confusing, too proscriptive or strict, and lacked sufficient flexibility.

II. Major Components of the Proposed Action

Some of the major items covered in the proposed NS1 guidelines were: (1) A description of the relationship between MSY, OY, overfishing limits (OFL), ABC, ACLs, and annual catch targets (ACT); (2) guidance on how to combine the use of ACLs and AMs for a stock to prevent overfishing when possible, and adjust ACLs and AMs, if an ACL is exceeded; (3) statutory exceptions to requirements for ACLs and AMs and flexibility in application of NS1 guidelines; (4) ''stocks in the fishery'' and ''ecosystem component species'' classifications; (5) replacement of MSY control rules with ABC control rules and replacement of OY control rules with ACT control rules; (6) new requirements for scientific and statistical committees (SSC); (7) explanation of the timeline to prepare new rebuilding plans; (8) revised guidance on how to establish rebuilding time targets; (9) advice on action to take at the end of a rebuilding period if a stock is not yet rebuilt; and (10) exceptions to the requirements to prevent overfishing.

III. Major Changes Made in the Final Action

The main substantive change in the final action pertains to ACTs. NMFS proposed ACT as a required reference point that needed to be included in FMPs. The final action retains the concept of an ACT and an ACT control rule, but does not require them to be included in FMPs. After taking public comment into consideration, NMFS has decided that ACTs are better addressed as AMs. The final guidelines provide that: ''For fisheries without inseason management control to prevent the ACL from being exceeded, AMs should utilize ACTs that are set below ACLs so that catches do not exceed the ACL.''

In response to public comment, this final action also clarifies text on ecosystem component species, OFL, OY specification, ABC control rule and specification, SSC recommendations, the setting of ACLs, sector-ACLs, and AMs, and makes minor clarifications to other text. Apart from these clarifications, the final action retains the same approaches described in the proposed guidelines with regard to: (1) Guidance on how to combine the use of ACLs and AMs for a stock to prevent overfishing when possible, and adjust ACLs and AMs, if an ACL is exceeded; (2) statutory exceptions to requirements for ACLs and AMs and flexibility in application of NS1 guidelines; (3) ''stocks in the fishery'' and ''ecosystem component species'' classifications; (4) new requirements for SSCs; (5) the timeline to prepare new rebuilding plans; (6) rebuilding time targets; (7) advice on action to take at the end of a rebuilding period if a stock is not yet rebuilt; and (8) exceptions to the requirements to prevent overfishing. Further explanation of why changes were or were not made is provided in the ''Response to Comments'' section below. Detail on changes made in the codified text is provided in the ''Changes from Proposed Action'' section.

IV. Overview of the Major Aspects of the Final Action

A. Stocks in the Fishery and Ecosystem Component Species

The proposed NS1 guidelines included suggested classifications of ''stocks in the fishery'' and ''ecosystem component (EC) species.'' *See* Figure 1 for diagram of classifications. Public comments reflected confusion about this proposal, so NMFS has clarified its general intent with regard to these classifications. More detailed responses to comments on this issue are provided later in this document.

The classifications in the NS1 guidelines are intended to reflect how FMPs have described ''fisheries,'' and to provide a helpful framework for thinking about how FMPs have incorporated and may continue to incorporate ecosystem considerations. To that end, the proposed NS1 guidelines attempted to describe the fact that FMPs typically include certain target species, and sometimes certain non-target species, that the Councils and/or the Secretary believed required conservation and management. In some FMPs, Councils have taken a broader approach and included hundreds of species, many of which may or may not require conservation and management but could be relevant in trying to further ecosystem management in the fishery.

NMFS wants to encourage ecosystem approaches to management, thus it proposed the EC species as a possible classification a Council or the Secretary could—but is not required to—consider. The final NS1 guidelines do not require a Council or the Secretary to include all target and non-target species as ''stocks in the fishery,'' do not mandate use of the EC species category, and do not require inclusion of particular species in an FMP. The decision of whether conservation and management is needed for a fishery and how that fishery should be defined remains within the authority and discretion of the relevant Council or the Secretary, as appropriate. NMFS presumes that stocks or stock complexes currently listed in an FMP are ''stocks in the fishery,'' unless the FMP is amended to explicitly indicate that the EC species category is being used. ''Stocks in the fishery'' need status determination criteria, other reference points, ACL mechanisms and AMs; EC species would not need them. NMFS recognizes the confusion caused by wording in the proposed action and has revised the final action to be more clear on these points.

Figure 1. General Framework for "Stocks in the Fishery" versus "Ecosystem Component Species." This figure describes the kind of stocks or stock complexes that might fall into the two classifications, but should not be viewed as requiring FMPs to include specific stocks or stock complexes in either category.

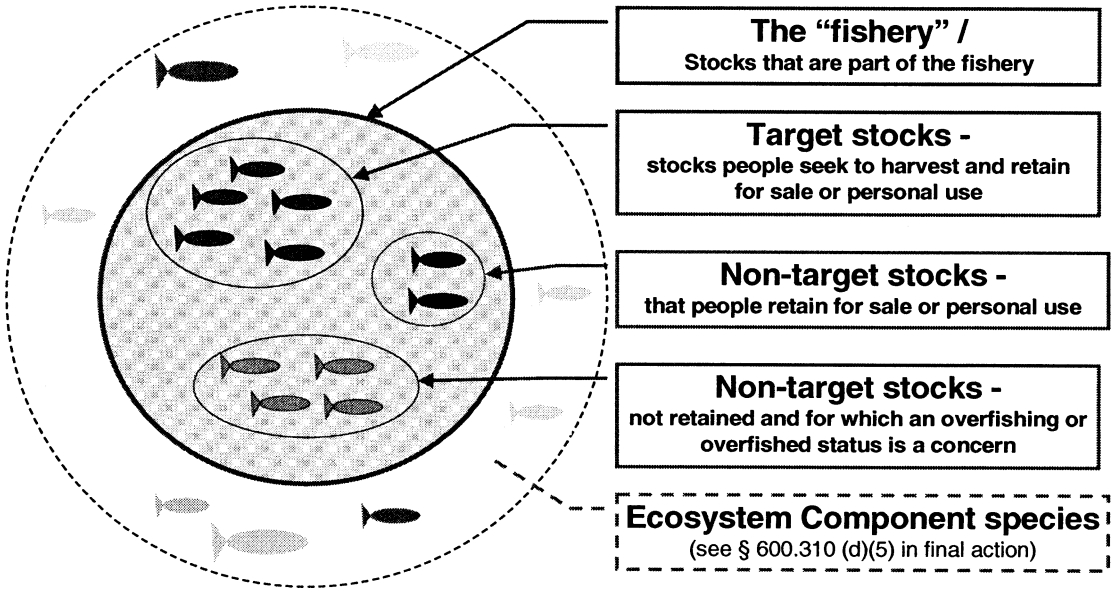

B. Definition Framework for OFL, ABC, and ACL

The MSRA does not define ACLs, AMs, and ABC, so NMFS proposed definitions for these terms in the proposed action. NMFS also proposed definitions for the terms OFL and ACT because it felt that they would be useful tools in helping ensure that ACLs are not exceeded and overfishing does not occur. The proposed NS1 guidelines described the relationship between the terms as: OFL ≥ ABC ≥ ACL ≥ ACT. In response to public comment, the final action revises the definition framework as: OFL ≥ ABC ≥ ACL. As described above, NMFS has retained ACT and the ACT control rule in the NS1 guidelines, but believes that they are more appropriate as AMs. NMFS believes ACTs could prove useful as management tools in fisheries with poor management control over catch (i.e., that frequently exceed catch targets).

NMFS received many comments on the definition framework, and some commenters stated that it should be revised as: OFL > ABC > ACL. Having considered public comment and reconsidered this issue, NMFS has decided to keep the framework as: OFL ≥ ABC ≥ ACL. However, NMFS believes there are few fisheries where setting OFL, ABC, and ACL all equal to each other would be appropriate. While the final action allows ABC to equal OFL, NMFS expects that in most cases ABC will be reduced from OFL to reduce the probability that overfishing might occur in a year. NMFS has added a provision to the final NS1 guidelines stating that, if a Council recommends an ACL which equals ABC, and the ABC is equal to OFL, the Secretary may presume that the proposal would not prevent overfishing, in the absence of sufficient analysis and justification for the approach. See figure 2 for an illustration of the relationship between OFL, ABC, ACL and ACT. Further detail on the definition framework and associated issues is provided in the ''Response to Comments'' section below.

Figure 2: Relationship between OFL, ABC, ACL and ACT

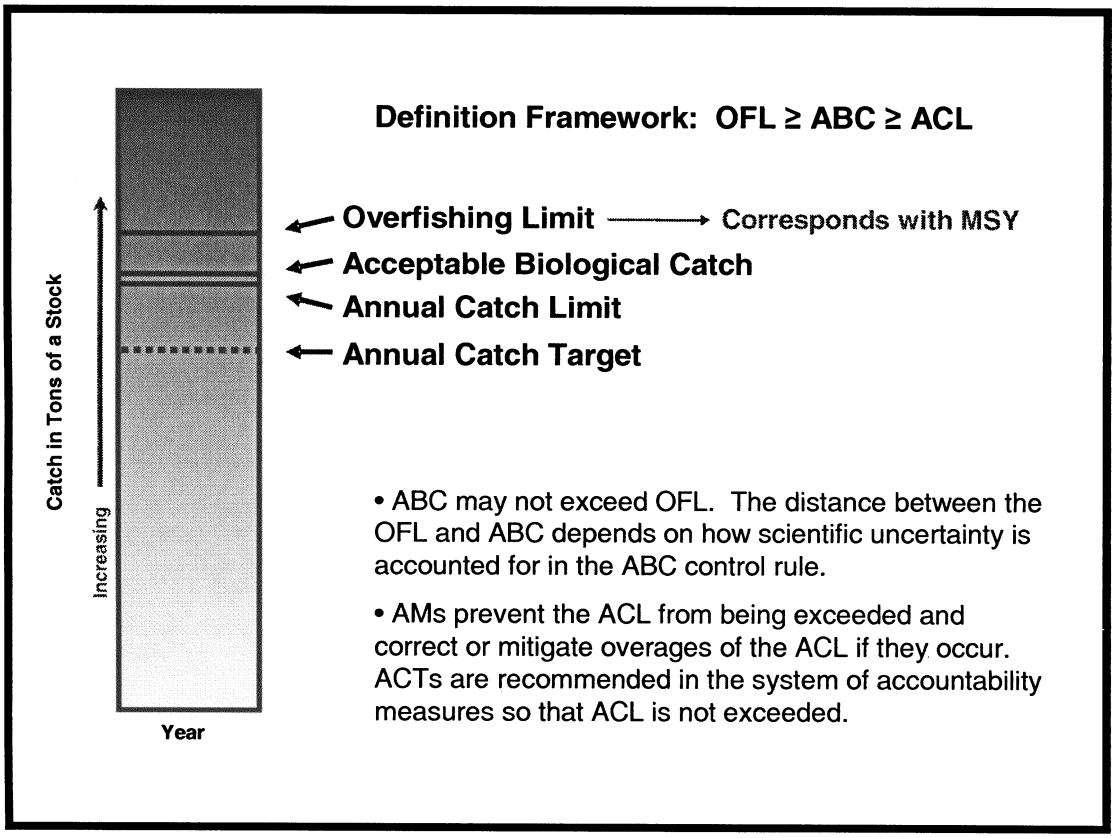

C. Accountability Measures (AMs)

Another major aspect of the revised NS1 guidelines is the inclusion of guidance on AMs. AMs are management controls to prevent ACLs, including sector-ACLs, from being exceeded, and to correct or mitigate overages of the ACL if they occur. NMFS has identified two categories of AMs, inseason AMs and AMs for when the ACL is exceeded. As described above, ACTs are recommended in the system of AMs so that ACLs are not exceeded. As a performance standard, if catch exceeds the ACL for a given stock or stock complex more than once in the last four years, the system of ACLs and AMs should be re-evaluated, and modified if necessary, to improve its performance and effectiveness.

D. SSC Recommendations and Process

Section 302(h)(6) of the MSA provides that each Council is required to ''develop annual catch limits for each of its managed fisheries that may not exceed the fishing level recommendations of its scientific and statistical committee or the peer review process established under subsection (g).'' MSA did not define ''fishing level recommendations,'' but in section 302(g)(1)(B), stated that an SSC shall provide ''recommendations for acceptable biological catch, preventing overfishing, maximum sustainable yield, and achieving rebuilding targets,'' and other scientific advice.

NMFS received a variety of public comments regarding interpretation of ''fishing level recommendations.'' Some commenters felt that the SSC's ''fishing level recommendations'' that should constrain ACLs is the overfishing limit (OFL); other commenters stated that ''fishing level recommendations'' should be equated with MSY. NMFS does not believe that MSA requires ''fishing level recommendations'' to be equated to the OFL or MSY. As described above, the MSA specifies a number of things that SSCs recommend to their Councils. Of all of these things, ABC is the most directly relevant to ACL, as both ABC and ACL are levels of annual catch.

The preamble to the proposed NS1 guidelines recommended that the Councils could establish a process in their Statement of Organization, Practices and Procedures (SOPPs) for: establishing an ABC control rule, applying the ABC control rule (i.e., calculating the ABC), and reviewing the resulting ABC. NMFS believes that this may have caused confusion and that some commenters misunderstood the intent of this recommendation. NMFS received comment regarding inclusion of the ABC control rule in the SOPPs, and wants to clarify that the actual ABC control rule should be described in the FMP. NMFS believes it is important to understand how the Councils, SSC, and optional peer review process work together to implement the provisions of the MSA and therefore recommends that the description of the roles and responsibilities of the Council, SSC, and optional peer review process be included in the SOPPs, FMP, or some other public document. The SSC recommends the ABC to the Council whether or not a peer review process is utilized.

E. Management Uncertainty and Scientific Uncertainty

A major aspect of the revised NS1 guidelines is the concept of incorporating management and scientific uncertainty in using ACLs and AMs. Management uncertainty occurs because of the lack of sufficient information about catch (*e.g.*, late reporting, underreporting and misreporting of landings or bycatch). Recreational fisheries generally have late reporting because of the method of surveying catches and the lack of an ability for managers to interview only marine recreational anglers. NMFS is addressing management uncertainty in the recreational fishery by implementing a national registry of recreational fishers in the Exclusive Economic Zone (EEZ) (see proposed rule published in the **Federal Register** (73 FR 33381, June 12, 2008)) and a Marine Recreational Implementation Program that will, in part, revise the sampling design of NMFS's marine recreational survey for fishing activity.

Management uncertainty also exists because of the lack of management precision in many fisheries due to lack of inseason fisheries landings data, lack of inseason closure authority, or the lack of sufficient inseason management in some FMPs when inseason fisheries data are available. The final NS1 guidelines revisions provide that FMPs should contain inseason closure authority that gives NMFS the ability to close fisheries if it determines, based on data that it deems sufficiently reliable, that an ACL has been exceeded or is projected to be reached, and that closure of a fishery is necessary to prevent overfishing. NMFS believes that such closure authority will enhance efforts to prevent overfishing. Councils can derive some idea of their overall extent of management uncertainty by comparing past actual catches to target catches to evaluate the magnitude and frequency of differences between actual catch and target catch, and how often actual catch exceeded the overfishing limit for a stock.

Scientific uncertainty includes uncertainty around the estimate of a stock's biomass and its maximum fishing mortality threshold (MFMT); therefore, any estimate of OFL has uncertainty. Stock assessment models have various sources of scientific uncertainty associated with them and many assessments have shown a repeating pattern that the previous assessment overestimated near-future biomass, and underestimated near-future fishing mortality rates (i.e., called retrospective patterns).

V. Response to Comments

NMFS received many comments about the proposed definition framework (OFL ≥ ABC ≥ ACL ≥ ACT), especially regarding the ACT and ACT control rule. Some commenters suggested that the ACT and ACT control rule should not be required, while others supported their use. NMFS also received comments expressing: That the proposed terminology should not be required; OFL should always be greater than ABC; and concern that too many factors (i.e., management and scientific uncertainty, and ACT) will reduce future target catches unnecessarily. Some commenters felt additional emphasis should be placed on T_{min} in the rebuilding provisions. Councils, for the most part, are very concerned about the challenge of implementing ACLs and AMs by 2010, and 2011, as required. Some commenters felt the international fisheries exception to ACLs is too broad. Several commenters stated that an EIS should have been or should be prepared and two commenters stated an Initial Regulatory Flexibility Analysis under the Regulatory Flexibility Act should be prepared. NMFS also received many comments regarding the mixed-stock exception.

NMFS received many comments expressing support for the proposed revisions to the Magnuson-Stevens Act National Standard 1 guidelines. Comments included: This good faith effort to implement Congress' intent will work to end overfishing and protect the marine ecosystem; these guidelines reduce the risk of overfishing and will work to rebuild depleted stocks through the use of science based annual catch limits, accountability measures, 'buffers' for scientific and management uncertainty, and protections for weak fish stocks; and this solid framework will ensure not only healthy stocks but healthy fisheries.

Comment 1: Several comments were received regarding NMFS's decision to not prepare an environmental impact statement or environmental assessment for this action. Some supported the decision, while others opposed it and believed that a categorical exclusion under the National Environmental Policy Act (NEPA) is not appropriate.

Response: NMFS believes a categorical exclusion is appropriate for this action. Under §§ 5.05 and 6.03c.3(i) of NOAA's Administrative Order (NAO) 216–6, the following types of actions may be categorically excluded from the requirement to prepare an EA or EIS: ''* * * policy directives, regulations and guidelines of an administrative, financial, legal, technical or procedural nature, or the environmental effects of which are too broad, speculative or conjectural to lend themselves to meaningful analysis and will be subject later to the NEPA process, either collectively or case-by-case. * * *''

In this instance, a Categorical Exclusion is appropriate for this action, because NMFS cannot meaningfully analyze potential environmental, economic, and social impacts at this stage. This action revises NS1 guidelines, which are advisory only; MSA provides that NS guidelines ''shall not have the force and effect of law.'' MSA section 301(b). *See Tutein* v. *Daley*, 43 F. Supp.2d 113, 121–122 (D. Mass. 1999) (reaffirming that the guidelines are only advisory and holding that the national standards are not subject to judicial review under the

MSA). The NS1 guidelines are intended to provide broad guidance on how to comply with new statutory requirements. While the guidelines explain in detail how different concepts, such as ACL, ABC, MSY, and OY, should be addressed, the guidelines do not mandate specific management measures for any fishery. It is not clear what Councils will or will not do in response to the NS1 guidelines. Thus, it is not possible to predict any concrete impacts on the human environment without the necessary intervening actions of the Councils, e.g., consideration of best available scientific information and development of specific conservation and management measures that may be needed based on that information. Any analysis of potential impacts would be speculative at best.

None of the exceptions for Categorical Exclusions provided by § 5.05c of NAO 216–6 apply. While there is controversy concerning the NS1 guidelines revisions, the controversy is primarily related to different views on how new MSA requirements should be interpreted, rather than potential environmental consequences. The NS1 guidelines would not, in themselves, have uncertain environmental impacts, unique or unknown risks, or cumulatively significant or adverse effects upon endangered or threatened species or their habitats. Moreover, this action would not establish a precedent or decision in principle about future proposals. As noted above, the guidelines provide broad guidance on how to address statutory requirements but do not mandate specific management actions.

Comment 2: One commenter criticized NMFS' approach as placing unnecessary burden on the Councils to conduct the NEPA analysis.

Response: No change was made. One of the Councils' roles is to develop conservation and management measures that are necessary and appropriate for management of fisheries under their authority. NMFS believes that Councils should continue to have the discretion to determine what measures may be needed in each fishery and what alternatives should be considered and analyzed as part of the fishery management planning process. Councils routinely incorporate NEPA into this process, and the actions to implement ACLs in specific fisheries must address the NEPA requirements, regardless of the level of analysis conducted for the guidelines. Therefore, having reviewed the issue again, NMFS continues to find that a categorical exclusion is appropriate for this action.

Comment 3: Two commenters stated that NMFS should have prepared an initial regulatory flexibility analysis under the RFA for this action. They said it was not appropriate to certify under the RFA because in their opinion, this action will have significant economic impacts on a substantial number of small entities.

Response: No change was made. The final NS1 guidelines will not have significant economic impacts on a substantial number of small entities. The guidelines are advisory only; they provide general guidance on how to address new overfishing, rebuilding, and related requirements under the MSA. Pursuant to MSA section 301(b), the guidelines do not have the force and effect of law. When the Councils/Secretary apply the guidelines to individual fisheries and implement ACL and AM mechanisms, they will develop specific measures in their FMPs and be able to analyze how the new measures compare with the status quo (e.g., annual measures before the MSRA was signed into law and the NS1 guidelines were revised) with respect to economic impacts on small entities. At this point, any analysis of impacts on small entities across the range of diverse, Federally-managed fisheries would be highly conjectural. Therefore, a certification is appropriate.

Comment 4: Several comments were received that the guidelines are too complex and they contain guidance for things, such as the ACT that are not required by the MSA. They suggested removing these provisions from the guidance, or only providing guidance for terms specifically mentioned in the statute.

Response: NMFS agrees that the guidelines can appear complex. However, the purpose of the guidelines is not simply to regurgitate statutory provisions, rather it is to provide guidance on how to meet the requirements of the statute. As discussed in other comments and responses, MSRA includes new, undefined terms (ABC and ACL), while retaining other long-standing provisions, such as the national standards. In considering how to understand new provisions in light of existing ones, NMFS considered different ways to interpret language in the MSA, practical challenges in fisheries management including scientific and management uncertainty, the fact that there are differences in how fisheries operate, and public comment on proposed approaches in the NS1 guidelines. MSA does not preclude NMFS from including additional terminology or explanations in the NS1 guidelines, as needed, in order to facilitate understanding and effective implementation of MSA mandates. In the case of NS1, conservation and management measures must prevent overfishing while achieving, on a continuing basis, the optimum yield. This is inherently challenging because preventing overfishing requires that harvest of fish be limited, while achieving OY requires that harvest of fish occur. In developing the guidelines, NMFS identified the reasons that overfishing was still occurring in about 20 percent of U.S. Fisheries, and wrote the guidelines to address the primary causes. These include:

(1) Setting OY too close to MSY,

(2) Failure to consider all sources of fishing mortality,

(3) Failure to adequately consider both uncertainty in the reference points provided by stock assessments (scientific uncertainty) and uncertainty in management control of the actual catch (management uncertainty),

(4) Failure to utilize best available information from the fishery for inseason management, and

(5) Failure to identify and correct management problems quickly.

NMFS believes that the guidelines address these causes and appropriately provide practical guidance on how to address them, while providing sufficient flexibility to acknowledge the differences in fisheries. NMFS believes that Congress intended that the ACLs be effective in ending and preventing overfishing. Simply amending the FMPs to include ACL provisions is not enough—the actual performance of the fishery is what ultimately matters. NMFS believes that all of the provisions in the guidelines are essential to achieving that goal, and that if the guidelines are followed, most of the problems that have led to continued overfishing will be addressed. NMFS has made changes in the final action to clarify the guidelines and simplify the provisions therein, to the extent possible. One specific change is that the final guidelines do not require that ACT always be established. Instead, NMFS describes how catch targets, such as ACT, would be used in a system of AMs in order to meet the requirements of NS1 to prevent overfishing and achieve OY. More details on these revisions are covered in responses pertaining to comments 8, 32, 44, 45, and 48.

Comment 5: Several commenters stated that Councils' workloads and the delay of final NS1 guidelines will result in some Councils having great difficulty or not being able to develop ACLs and AMs for overfishing stocks by 2010, and all other stocks by 2011.

Response: The requirements in MSA related to 2010 and 2011 are statutory; therefore ACLs and AMs need to be in place for those fishing years such that overfishing does not occur. NMFS understands that initial ACL measures for some fisheries have been developed before the NS1 guidelines were finalized in order to meet the statutory deadline, and thus may not be fully consistent with the guidelines. ACL mechanisms developed before the final guidelines should be reviewed and eventually revised consistent with the guidelines.

Comment 6: Several commenters stated that certain existing FMPs and processes are already in compliance with the ACL and AM provisions of the MSA and consistent with the proposed guidelines. One commenter stated that NMFS should bear the burden of determining whether current processes are inconsistent with the MSA, and indicate what action Councils should take. Another commenter stated that Congress intended Total Allowable Catch (TAC), which is already used in some fisheries, to be considered to be an ACL. NMFS also received comments stating that certain terms have had longstanding use under FMPs, and changing the terminology could cause too much confusion.

Response: NMFS believes that some existing FMPs may be found to need little or no modification in order to be found to be consistent with the MSA and NS1 guidelines. In general, these are fisheries where catch limits are established and the fishery is managed so that the limits are not exceeded, and where overfishing is not occurring. NMFS agrees that, in some fisheries, the TAC system currently used may meet the requirements of an ACL. However, there are a wide variety of fisheries that use the term TAC, and while some treat it as a true limit, others treat it simply as a target value on which to base management measures. Therefore, NMFS does not agree that the use of a TAC necessarily means the fishery will comply with the ACL and AM provisions of the MSA. NMFS will have to review specific FMPs or FMP amendments. In addition, upon request of a Council, NMFS can provide input regarding any changes to current processes that might be needed for consistency with the MSA and guidance in the NS1 guidelines.

Regarding the comment about terminology, the preamble to the proposed action provided that Councils could opt to retain existing terminology and explain in a proposed rule how the terminology and approaches to the FMPs are consistent with those set forth in the NS1 guidelines. NMFS has given this issue further consideration and believes that a proposed rule would not be necessary or appropriate. Instead, a Council could explain in a **Federal Register** notice why its terminology and approaches are consistent with the NS1 guidelines.

Comment 7: Some commenters thought that before requiring implementation of a new management system, it should first be demonstrated that the current management system is not effective at preventing overfishing or rebuilding stocks that are overfished, and that a new management system would be more effective. Changing a management system that is effective and responsive would not be productive.

Response: While NMFS understands that current conservation and management measures prevent overfishing in some fisheries, the MSA requires a mechanism for specifying ACLs and AMs in all fisheries, including those that are not currently subject to overfishing, unless an exception applies. There is no exception to the requirement for ACLs and AMs for fisheries where other, non-ACL management measures are preventing overfishing. NMFS is required by the MSRA to implement the new provisions in all FMPs, unless an exception applies, even on those whose current management is preventing overfishing. NMFS believes the guidance provides the tools for Councils to implement ACLs in these fisheries that will continue to prevent overfishing without disrupting successful management approaches. The guidelines provide flexibility to deviate from the specific framework described in the guidelines, if a different approach will meet the statutory requirements and is more appropriate for a specific fishery (*see* § 600.310(h)(3) of the final action).

Comment 8: Some commenters supported the use of ACT to address management uncertainty in the fishery. Others did not support ACTs, and commented that ACTs are not required under the MSA and that inclusion of ACTs in the guidelines creates confusion and complexity. One commenter stated that the proposed guidelines were ''out of line'' with NMFS's mandate and authority provided under the MSA because the guidelines for ACTs and associated control rules completely undermine the clear directive Congress provides in National Standard 1 to achieve optimum yield on an ongoing basis.

Response: The proposed guidelines stressed the importance of addressing scientific and management uncertainty in establishing ACL and AM mechanisms. Scientific uncertainty was addressed in the ABC control rule, and management uncertainty was addressed in the ACT control rule. Use of catch targets associated with catch limits is a well-recognized principle of fishery management. The current NS1 guidelines call for establishment of limits, and targets set sufficiently below the limits so that the limits are not exceeded. The revised guidelines are based on this same principle, but, to incorporate the statutory requirements for ABC and ACLs, are more explicit than the current guidelines. While MSA does not refer to the term ACT, inclusion of the term in the NS1 guidelines is consistent with the Act. The NS1 guidelines are supposed to provide advice on how to address MSA requirements, including how to understand terminology in the Act and how to apply that terminology given the practical realities of fisheries management. In developing the proposed guidelines, NMFS considered a system that used ABC as the limit that should not be exceeded, and that required that ACL be set below the ABC to account for management uncertainty. This had the advantage of minimizing the number of terms, but would result in the ACL having been a target catch level. NMFS decided, that since Congress called for annual catch limits to be set, that the ACL should be considered a true limit—a level not to be exceeded. ACT was the term adopted for the corresponding target value which the fishery is managed toward so that the ACL is not exceeded.

Taking public comment into consideration, NMFS has decided to retain ACTs and ACT control rules in the final guidelines, but believes they are better addressed as AMs for a fishery. One purpose of the AMs is to prevent the ACL from being exceeded. Setting an ACT with consideration of management uncertainty is one way to achieve this, but may not be needed in all cases. In fisheries where monitoring of catch is good and in-season management measures are effective, managers may be able to prevent ACLs from being exceeded through direct monitoring and regulation of the fishery. Therefore, the final guidelines make ACTs optional, but, to prevent ACLs from being exceeded, Councils must adequately address the management uncertainty in their fisheries using the full range of AMs.

NMFS disagrees that ACTs undermine NS1. NS1 requires that conservation and management measures prevent overfishing while achieving, on a continuing basis, the OY. The MSA describes that OY is based on MSY, as reduced based on consideration of

several factors. In some cases, the amount of reduction may be zero, but in no case may the OY exceed MSY. Therefore, if OY is set close to MSY, the conservation and management measures in the fishery must have very good control of the amount of catch in order to achieve the OY without overfishing.

The amount of fishing mortality that results in overfishing is dictated by the biology of the stock and its environment, and establishes a limit that constrains fisheries management. However, the specification of OY and the conservation and management measures for the fishery are both set by fishery managers. To achieve the dual requirements of NS1, Councils must specify an OY and establish conservation and management measures for the fishery that can achieve the OY without overfishing. The closer that OY is set to MSY, the greater degree of control over harvest is necessary in order to meet both objectives. The choice of conservation and management measures for a fishery incorporates social and economic considerations. For example, a Council may prefer to use effort controls instead of hard quotas to have a year-round fishery without a ''race for fish,'' and to provide higher average prices for the fishermen. However, compared to hard quotas, management with effort controls gives more uncertainty in the actual amount of fish that will be caught. Because of this increased uncertainty, the OY needs to be reduced from MSY so that overfishing does not occur. Thus the social and economic considerations of the choice of management measures should be considered in setting the OY.

In cases where the conservation and management measures for a fishery are not capable of achieving OY without overfishing occurring, overfishing must be ended even if it means the OY is not achieved in the short-term. Overfishing a stock in the short term to achieve OY jeopardizes the capacity of the stock to produce OY in the long term, and thus cannot be sustained. Preventing overfishing in a fishery on an annual basis is important to ensure that a fishery can continue to achieve OY on a continuing basis. The specification of OY and the associated conservation and management measures need to be improved so that OY can be achieved without overfishing occurring. In a fishery where the NS1 objectives are fully met, the OY specification will adequately account for the management uncertainty in the associated conservation and management measures. Overfishing will not occur, and the OY will be achieved.

Comment 9: Commenters stated that the designation of the Virgin Islands Coral Reef Monument was not being taken into account in the Caribbean Council's FMPs.

Response: NMFS does not believe any revision of the NS1 guidelines is necessary in response to this comment but will forward the comment to the Council for its consideration.

Comment 10: NMFS received comments in support of the flexibility given to councils to manage stocks for which ACLs are not a good fit, such as management of Endangered Species Act listed species, stocks with unusual life history characteristics, and aquaculture operations. Commenters noted that Pacific salmon should be treated with flexibility under the NS1 guidelines, because they are managed to annual escapement levels that are functionally equivalent to ACLs, and there are accountability, review, and oversight measures in the fishery.

Response: NMFS agrees that flexibility is needed for certain management situations, and clarifies that § 600.310(h)(3) provides for flexibility in application of the NS1 guidelines but is not an exception from requirements of MSA section 303(a)(15) or other sections.

Comment 11: Congress did not mandate that all fisheries be managed by hard quotas, and so NMFS should include guidance for the continuation of successful, non-quota management systems, such as that used to successfully manage the Atlantic sea scallop fishery.

Response: NMFS agrees that the conservation and management measures for a fishery are not required to be ''hard quotas.'' However, NMFS believes that the ACL was intended by Congress to be a limit on annual catch. Therefore, conservation and management measures must be implemented so that the ACL is not exceeded, and that accountability measures must apply whenever the ACL is exceeded. Congress did not exempt any fisheries from the ACL requirement on the basis that current management was successful. If the current conservation and management measures are effective in controlling harvest of sea scallops such that the ACL is not regularly exceeded, the ACL would have little effect on the fishery. If the current management measures are not effective in keeping catch from exceeding the ACL, then consistent with the ACL requirement in the MSA, additional management action should be taken to prevent overfishing.

Comment 12: The summary list of items to be included in FMPs should be ''as appropriate'' (see § 600.310(c) of the final action).

Response: No change was made. NMFS believes that if any item does not apply to a particular fishery, the Council can explain why it is not included, but believes that ''as appropriate'' would create further confusion as there is no clear definition of what appropriate means in this context.

Comment 13: The list of items to include in FMPs related to NS1 is extremely long, and it is unclear whether each item on the list needs to be addressed for all stocks that are ''in the fishery,'' which is a very broad term. Including the extra information is unlikely to materially improve management.

Response: As a default, all the stocks or stock complexes in an FMP are considered ''in the fishery'' (see § 600.310(d)(1)), unless they are reclassified as ecosystem component stocks through an FMP amendment process. Further explanation of these classifications is provided below in other comments and responses. The benefit of including this list of items is to provide transparency in how the NS1 guidelines are being met. In addition, Councils should already have some of the items in their FMPs (ex: MSY, status determination criteria (SDC), and OY). The other items are new requirements of the MSA or a logical extension of the MSA.

Comment 14: NMFS received several comments both supporting and opposing the proposed ''stocks in a fishery'' and ''ecosystem component species'' (EC) classifications of stocks in a FMP. Comments included: EC species are not provided under the MSA and should not be required in FMPs; EC species classification is needed but may lead to duplication in different FMPs; support for the distinction between ''stocks in a fishery'' and EC species; and clarify how data collection only species should be classified.

Response: NMFS provided language for classifying stocks in a FMP into two categories: (1) ''Stocks in the fishery'' and (2) ''ecosystem component species.'' MSA requires that Councils develop ACLs for each of their managed fisheries (see MSA sections 302(h)(6) and 303(a)(15)), but Councils have had, and continue to have, considerable discretion in defining the ''fishery'' under their FMPs. As a result, some FMPs include one or a few stocks (*e.g.* , Bluefish FMP, Dolphin-Wahoo FMP) that have been traditionally managed for OY, whereas others have begun including hundreds of species (e.g., Coral Reef Ecosystem of the Western Pacific Region FMP) in an

effort to incorporate ecosystem approaches to management.

While EC species are not explicitly provided in the MSA, in the MSRA, Congress acknowledged that certain Councils have made significant progress in integrating ecosystem considerations, and also included new provisions to support such efforts (*e.g.*, MSA section 303(b)(12)). As noted in the preamble of this action, NMFS wants to continue to encourage Councils to incorporate ecosystem considerations, and having classifications for ''stocks in the fishery'' versus ''ecosystem component species'' could be helpful in this regard. Thus, the final guidelines do not require Councils or the Secretary to change which species are or are not included in FMPs, nor do the guidelines require FMPs to incorporate the EC species classification. NMFS has revised the final guidelines to state explicitly that Councils or the Secretary may—but are not required to—use an EC species classification.

In developing the text regarding EC species and ''stocks in the fishery,'' NMFS examined what existing FMPs are already doing and utilized that in its description of these classifications. For example, based on existing FMPs, the guidelines envision that species included for data collection and other monitoring purposes could be considered EC species (assuming they meet the criteria described in § 600.310(d)(5)(i)). However, such species could also be ''stocks in the fishery,'' as described under the NS3 guidelines (§ 600.320(d)(2)). NMFS recognizes the desire for greater specificity regarding exactly which species could or could not be considered EC species, but does not believe that further detail in the guidelines could clarify things definitively. Determining whether the EC category is appropriate requires a specific look at stocks or stock complexes in light of the general EC species description provided in the NS1 guidelines as well as the broader mandates and requirements of the MSA. If Councils decide that they want to explore potential use of the EC species classification, NMFS will work closely with them to consider whether such a classification is appropriate.

Comment 15: NMFS received several comments regarding the level of interaction that would be appropriate for the EC classification. Comments included: *de minimis* levels of catch should be defined to clarify the difference between ''stocks in a fishery'' and EC species; all stocks that interact with a fishery should be included as ''stocks in a fishery''; requiring non-target stocks to be considered part of the fishery as written supersedes NS9; guidelines should clarify that EC species do not have significant interaction with the fishery; and, bycatch species should not be included as ''stocks in a fishery.''

Response: NMFS is revising the final guidelines to clarify preliminary factors to be taken into account when considering a species for possible classification as an EC species. Such factors include that the species should: (1) Be a non-target species or non-target stock; (2) not be determined to be subject to overfishing, approaching overfished, or overfished; (3) not likely to become subject to overfishing or overfished, according to the best available information, in the absence of conservation and management measures; and (4) not generally retained for sale or personal use. Factors (2) and (3) are more relevant to species that are currently listed in FMPs and that have specified SDCs. With regard to factor (4), the final guidelines add new language in § 600.310(d)(5)(i)(D)—''not generally retained for sale or personal use''—in lieu of ''*de minimis* levels of catch'' and clarify that occasional retention of a species would not, in itself, preclude consideration of a species in the EC classification. The NS1 guidelines provide general factors to be considered, as well as some examples of possible reasons for using the EC category. However, the decision of whether to use an EC classification requires consideration of the specific fishery and a determination that the EC classification will be consistent with conservation and management requirements of the MSA.

Under the MSA, a Council prepares and submits FMPs for each fishery under its authority that requires conservation and management, and there is considerable latitude in the definition of the fishery under different FMPs. The definition of ''fishery'' is broad, and could include one or more stocks of fish treated as a unit for different purposes, as well as fishing for such stock (see MSA section 3(13)(B)). While some comments encouraged inclusion of all species that might interact with a fishery, all bycatch species, or all species for which there may be ''fishing'' as defined in MSA section 3(13)(B), NMFS does not believe that MSA mandates such a result. MSA does not compel FMPs to include particular stocks or stock complexes, but authorizes the Councils or the Secretary to make the determination of what the conservation and management needs are and how best to address them. Taking the broader approaches noted above would interfere with this discretion and also could result in overlapping or duplicative conservation and management regimes in multiple FMPs under different Council jurisdictions. As National Standard 6 requires that conservation and management measures, where practicable, minimize costs and avoid unnecessary duplication, NMFS believes that Councils should retain the discretion to determine which fisheries require specific conservation and management measures. With regard to bycatch, regardless of whether a species is identified as part of a fishery or not, National Standard 9 requires that FMPs, to the extent practicable, minimize bycatch and to the extent it cannot be avoided minimize bycatch mortality. Additional protections are afforded to some species under the Endangered Species Act, regardless of whether they are listed as stocks in a fishery. Further, as a scientific matter, NMFS disagrees that every bycatch species would require conservation and management measures to protect the species from becoming overfished, because some bycatch species exhibit high productivity levels (*e.g.*, mature early) and low susceptibilities to fishery (*e.g.*, rarely captured) that preclude them from being biologically harmed or depleted by particular fisheries.

Comment 16: NMFS received several comments requesting that the guidelines include a description of vulnerability and how it should be determined, since it is referenced throughout the guidelines.

Response: NMFS agrees, and has added § 600.310(d)(10) to the final action, to define vulnerability. In general, to determine the vulnerability of a species/stock becoming overfished, NMFS suggests using quantitative estimates of biomass and fishing rates where possible; however, when data are lacking, qualitative estimates can be used. NMFS is currently developing a qualitative methodology for evaluating the productivity and susceptibility of a stock to determine its vulnerability to the fishery, and anticipates the methodology to be finalized by February 2009. The methodology is based on the productivity-susceptibility analysis (PSA) developed by Stobutzki *et al.* (2001), which was suggested by many commenters. Stocks that have low susceptibilities (*e.g.*, rarely interact with the fishery, no indirect impacts to habitat, etc.) and high productivities (*e.g.*, mature at an early age, highly fecund, etc.) are considered to have a low vulnerability of becoming overfished, while stocks that have low productivities and high susceptibilities

to the fishery are considered highly vulnerable to becoming overfished.

Comment 17: Some commenters noted that the EC classification could be used to avoid reference point specification.

Response: NMFS believes that the guidelines provide mechanisms to address this issue. As a default, NMFS presumes that all stocks or stock complexes that Councils or the Secretary decided to include in FMPs are ''stocks in the fishery'' that need ACL mechanisms and AMs and biological reference points. Whether it would be appropriate to include species in the EC category would require consideration of whether such action was consistent with the NS1 guidelines as well as the MSA as a whole. If a Council or the Secretary wishes to add or reclassify stocks, a FMP amendment would be required, which documents rationale for the decision. However, the guidelines have been modified to note that EC species should be monitored to the extent that any new pertinent scientific information becomes available (*e.g.*, catch trends, vulnerability, etc.) to determine if the stock should be reclassified.

Comment 18: With regard to ecological, economic, and social (EES) factors related to OY, some commenters requested more specific guidance in incorporating the factors, and others commented that accounting for the factors is too time consuming. Other commenters expressed support for the reference to forage fish species and suggested including text on maximum economic yield and fish health.

Response: The NS1 guidelines generally describe OY as the long-term average amount of desired yield from a stock, stock complex, or fishery. OY is prescribed on the basis of MSY as reduced by EES factors (MSA section 3(33)). The NS1 guidelines set forth examples of different considerations for each factor, and NMFS believes the examples provide sufficient guidance on EES factors. NMFS has not made substantive changes from the proposed action, but has clarified that FMPs must address each factor but not necessarily each example.

Comment 19: NMFS received several comments in support of using stock complexes as a management tool in data poor situations and other comments that expressed concern about the use of stock complexes and indicator species. Comments included: stock complexes should only be used when sufficient data are lacking to generate species-specific SDCs and related reference points; there is little ecological basis for using indicator species to set ACLs for stock complexes (see Shertzer and Williams (2008)) as stocks within a stock complex exhibit different susceptibilities to the fishery; if used, stock complexes should be managed using the weakest or most vulnerable stock within the complex as a precautionary approach to management; it would be helpful to have examples of how a data poor stock could be periodically examined to determine if the stock is overfished or subject to overfishing.

Response: NMFS agrees that where possible Councils should generate stock-specific SDCs and related reference points for stocks in fishery; however, there are other circumstances in which stock complex management could be used. NMFS notes in § 600.310(d)(8) of the final action that stocks may be grouped into complexes for various reasons, including: where stocks in a multispecies fishery cannot be targeted independent of one another and MSY can not be defined on a stock-by-stock basis (see § 600.310(e)(1)(iii) of the final action); where there is insufficient data to measure their status relative to SDC; or when it is not feasible for fishermen to distinguish individual stocks among their catch.

NMFS believes that the guidelines sufficiently addressed the issue that stock complexes should be managed using the most vulnerable stock within the complex. In § 600.310(d)(9) of the final action the guidelines note that ''if the stocks within a stock complex have a wide range of vulnerability, they should be reorganized into different stock complexes that have similar vulnerabilities; otherwise the indicator stock should be chosen to represent the more vulnerable stocks within the complex. In instances where an indicator stock is less vulnerable than other members of the complex, management measures need to be more conservative so that the more vulnerable members of the complex are not at risk from the fishery.'' Additionally, these guidelines address the concerns of Shertzer and Williams (2008), by recommending that both productivity and susceptibility of the stock (*i.e.*, vulnerability to the fishery) is considered when creating or re-organizing stock complexes.

Lastly, NMFS agrees and has modified the phrase in § 600.310(d)(9) of the proposed action ''Although the indicator stock(s) are used to evaluate the status of the complex, individual stocks within complexes should be examined periodically using available quantitative or qualitative information to evaluate whether a stock has become overfished or may be subject to overfishing'' to provide examples of quantitative or qualitative analysis.

Comment 20: NMFS received comments regarding the process for specifying the ACL for either a stock complex or for a single indicator species. The commenters were concerned that the proper data will not be utilized to determine whether the ACL should be set for the stock complex or for single indicator species. They feel that the use of single indicator species would not represent the stock's abundance, especially in the St. Thomas/St. John and St. Croix fisheries.

Response: NMFS understands the concern, but does not believe the guidelines need to be revised. NMFS will refer this comment to the Council.

Comment 21: NMFS received comments stating that the final action should clarify how SDCs and ACLs should be applied to stocks that are targeted in one fishery and bycatch in another, as well as circumstances where the stock is targeted by two or more FMPs that are managed by different regional councils.

Response: NMFS believes that the guidelines sufficiently addressed this issue in § 600.310(d)(7) of the final action, which notes ''* * * Councils should choose which FMP will be the primary FMP in which management objectives, SDC, the stock's overall ACL and other reference points for the stock are established.'' NMFS believes that the Councils should continue to have the discretion to make such determinations. NMFS, however, suggests that the primary FMP should usually be the FMP under which the stock is targeted. In instances where the stock is targeted in two or more FMPs (*e.g.*, managed by two or more Councils), Councils should work together to determine which FMP is the primary.

Comment 22: Several commenters requested further clarification on how prohibited species should be classified under the proposed classification scheme (see § 600.310(d)) because they felt it was unclear whether a species for which directed catch and retention is prohibited would be classified as ''in the fishery'' or as an ''ecosystem component''.

Response: NMFS believes that the information in § 600.310(d) provides a sufficient framework in which decisions can be made about how to classify a prohibited species under an FMP. Prohibition on directed catch and/or retention can be applied to either a stock that is ''in the fishery'' or an ''ecosystem component'' species. Managers should consider the classification scheme outlined in § 600.310(d) of the final action as well

as MSA conservation and management requirements generally. If a stock contains one of the ''in the fishery'' characteristics, then it belongs ''in the fishery'', regardless of the management tools that will be applied to it (*e.g.*, prohibition, bag limits, quotas, seasons, etc.). Also, if the intent is to prohibit directed fishing and retention throughout the exclusive economic zone (EEZ) for which a Council has jurisdiction, then the stock would, most likely, be identified in an FMP as ''in the fishery'' rather than as an ecosystem component of one particular FMP.

Comment 23: Several commenters asked at what level an ACL would be specified for a species for which directed catch and retention is prohibited. Setting the ACL at zero would not be logical because if even one was caught incidentally then AMs would be triggered. Setting it higher would also not be logical because the point is to ensure little to no catch of the stock.

Response: Prohibiting retention is a management measure to constrain the catch to a minimal amount. If listed as a stock in the fishery, the reference points for the species, such as OFL and ABC, should be set based on the MSY for the stock, or, if ESA listed, would be set according to the associated ESA consultation's incidental take statement, regardless of the management approach used. The ACL may not exceed the ABC, but should be set at a level so that the mortality resulting from catch and discard is less than the ACL.

Comment 24: NMFS received a comment stating that the specification of MSY must incorporate risk, be based on gear selectivity and support a healthy, functioning ecosystem. The commenter supported revisions to § 600.310(e)(1) of the proposed action but suggested that it should be strengthened to address ecosystem principles. The commenter cited NOAA Tech Memo NMFS–F/SPO–40 in contending that the concept of MSY contains inherent risks that must be addressed in establishing reference points. Other commenters stated that: Councils establish management measures with high probabilities of success (*e.g.*, 80 percent); ''fishery technological characteristics'' should be re-evaluated every two years; and MSY values normally equate to fishing down a population to forty percent of historic abundance and this may not be consistent with ecosystem based management.

Response: NMFS agrees that ecological conditions and ecosystem factors should be taken into account when specifying MSY and has added additional language to § 600.310(e)(1)(iv) of the final action to highlight this point. Such factors might include establishing a higher target level of biomass than normally associated with the specific stock's B_{msy}. In addition, ecological conditions not directly accounted for in the specification of MSY can be among the ecological factors considered when setting OY below MSY. Regarding the comment about establishing management measures with a high probability of success, this is addressed in comment #63. NMFS does not believe that the NS1 guidelines need to be revised to require that fishery technological characteristics be evaluated every 2 years; such characteristics would be routinely updated with each stock assessment. The MSA bases management of fishery resources on MSY, but provides that OY can be reduced from MSY for ecological factors. NMFS believes the guidelines are consistent with the MSA and allow Councils to implement ecosystem approaches to management.

Comment 25: Several comments requested the guidelines state that specification of reference points should not be required for a stock ''in the fishery'' if its directed catch and retention is prohibited because managers applied the prohibition in an effort to prevent overfishing.

Response: Prohibition of retention does not necessarily mean that overfishing is prevented. Even though the species cannot be retained, the level of fishing mortality may still result in overfishing. Many stocks for which prohibitions are currently in place are considered data-poor. NMFS acknowledges that specifying reference points and AMs will be a challenge for such stocks, but reiterates the requirement to establish ACLs and AMs for all managed fisheries, unless they fall under the two statutory exceptions (see § 600.310(h)(2) of the final action), and also the need to take into consideration best scientific information available per National Standard 2.

Comment 26: NMFS received comments voicing a concern about the NMFS process of determining the overfishing status of a fishery, because fishery management measures have been implemented to end overfishing, but stocks are still listed as subject to overfishing and require ACLs by 2010. The commenters felt that several species under the Caribbean Fishery Management Council's protection should currently be removed from the overfished species list.

Response: NMFS agrees that this is an important issue. Due to the process inherent in determining the status of a stock there is inevitably a lag time between implementation of management measures and a new assessment of the stock's status under those measures. NMFS is required by the MSA to establish new requirements to end and prevent overfishing through the use of ACLs and AMs. The fisheries subject to overfishing, including several in the Caribbean, are required to have ACLs by 2010, and all other fisheries must have ACLs by 2011. The Council's Comprehensive Amendment that implemented the Sustainable Fisheries Act in 2006 included measures designed to end overfishing. Although these measures may have ameliorated fishing pressure for some fishery resources in the U.S. Virgin Islands, the Council will need to evaluate the existing fishery management measures to determine whether they are sufficient to meet the new statutory requirements for ACLs and AMs.

Comment 27: Several commenters stated that NMFS should not include the OFL as the basis for overfishing SDC. Specific comments included: (1) The MSA does not define or require OFL, so NMFS should not use it in the guidelines; (2) catch-based SDC are inconsistent with the Magnuson-Stevens Act intent and SDC should only be based on the fishing mortality rate as it relates to a stock or stock complex's capacity to achieve MSY on a continual basis; (3) the Magnuson-Stevens Act does not require use of the long term average OFL as MSY; (4) NMFS increases the risk of overfishing when theoretical catch estimates or a constant fishing mortality rate (F) are used to manage a fishery especially when a retrospective pattern exists in a stock or stock complex.

Response: The term, OFL, is not defined in the MSA. However, OFL is directly based on requirements of the MSA, including the concept of MSY, and the requirement to prevent overfishing. NMFS does not believe that lack of a definition in the MSA precludes definition and use of OFL in order to meet the objectives of the MSA. The MSA defines overfishing as a rate or level of fishing mortality that jeopardizes the capacity of the stock to produce MSY. This mortality rate is defined by NMFS as the MFMT. The OFL for a year is calculated from the MFMT and the best estimate of biomass for a stock in that year, and thus is simply the MFMT converted into an amount of fish. The OFL is an annual level of catch that corresponds directly to the MFMT, and is the best estimate of the catch level above which overfishing is occurring. OFL is in terms

of catch, and thus is in the same units as ABC and ACL. NMFS believes, therefore, that comparing catch to OFL is a valid basis for determining if overfishing has occurred that year. The relationship of MSY to OFL is that MSY is the maximum yield that the stock can provide, in the long term, while OFL is an annual estimate of the amount of catch above which overfishing is occurring. The annual OFL varies above and below the MSY level depending on fluctuations in stock size. Since both MSY and OFL are related to the highest fishing mortality rate that will not result in overfishing, it is expected that the long-term average of OFLs would equate to MSY, provided that the stock abundance is high enough to support MSY.

The NS1 guidelines give the Councils flexibility to determine if overfishing occurs by using either MFMT (F > MFMT) or actual annual catch (catch > OFL) as the criteria for overfishing determinations. There are advantages and disadvantages of using either measure. The advantages of using OFL as a SDC are that catch can be easily understood by constituents, a determination can be made as soon as catch totals are available, and there is no retrospective problem with setting the SDC itself. Use of OFL might not be appropriate for stocks with highly variable recruitment that can not be predicted and therefore incorporated into the forecast of stock condition on which OFL is based. The advantage of using MFMT to determine if overfishing is occurring is because F is based on a stock assessment analyzing the past performance of the fishery. This means that the MFMT method is less sensitive than the OFL method to recent fluctuations in recruitment. However, F cannot not be calculated until an assessment has been updated, which may lag the fishery by several years. Therefore, a status determination based on MFMT could be less current than a determination based on OFL and catch, and reflects past, rather than current, fishery performance. Also, if there is a retrospective pattern in the assessment, then the hindsight estimate of F for a particular year used for the SDC will be different than the forecast estimate of stock condition used when setting target catch levels and management measures for that same year. The choice of SDC for a stock should consider things like the frequency of stock assessments, the ability to forecast future stock size, and any known retrospective patterns in the assessment. If the SDC are appropriately chosen, NMFS does not believe that one method necessarily presents more risk that overfishing will occur.

Comment 28: NMFS received one comment which proposed that instead of being required to choose between OFL or MFMT as the SDC, that Councils should have the flexibility to use both. The comment implied that this would allow Councils to use MFMT as the SDC in years in which there is an assessment and OFL in years in which there is not an assessment.

Response: The NS1 guidelines require documentation for the rationale a Council uses to select the SDC within the FMP including defining overfishing status in terms of the MFMT (*i.e.*, fishing mortality rate) or OFL (*i.e.*, annual total catch) in such a way that overfishing can be monitored and determined on an annual basis. A Council could develop SDC based on both criteria, if sufficient rationale is provided.

Comment 29: NMFS received two comments in opposition to the ''overfished'' definition used by NMFS in the proposed rule. They point out that the current overfished definition could include stocks that are ''depleted'' due to changing environmental conditions not caused by fishing pressure. They propose that NMFS should revise the definition of ''overfished'' and create a ''depleted'' category for stocks that have declined below the minimum stock size threshold (MSST) due to changing environmental conditions.

Response: The overfished definition used by NMFS is consistent with the MSA. NMFS acknowledges that factors other than fishing mortality can reduce stock size below the MSST but NMFS believes the definition of overfished should not be altered. For stocks in a FMP, the MSA requires the Councils to rebuild the stock to a level consistent with producing the MSY regardless of the contributing factors. In most cases, the variation in relative contribution of environmental and fishing factors from year to year in reducing stock abundance is not known. When specifying SDC the Council is required to provide an analysis of how the SDC were chosen and how they relate to the reproductive potential of the stock. Specifically, the MSST should be expressed in terms of reproductive potential or spawning biomass. Furthermore, the stock assessment process can adjust the B_{msy} estimates and associated SDC due to environmental and ecological factors or changes in the estimates of reproductive potential, size/age at maturity, or other biological parameters.

Comment 30: Several comments suggested that NMFS should strike § 600.310(e)(2)(iii)(B) from the proposed action as it contradicts § 600.310(e)(2)(iii)(A) and could increase fishing pressure on a depleted stock by attributing low stock abundance to environmental conditions. Commenters criticized the requirement at § 600.310(e)(2)(iii)(B) that Councils ''must'' take action to modify SDC, and stated that there is little scientific evidence to show linkages between stock size and environmental conditions (citing to Restrepo *et al.* 1998 and NMFS. 2000. Endangered Species Act—Section 7 Consultation Biological Opinion and Incidental Take Statement). Commenters asserted that there is no statutory basis for this provision in the MSA and the legal standard for the word ''affect'' is vague and inadequate for ending overfishing. The comments stated that, in a time of anthropogenic climate change, stock dynamics are likely to change and by establishing this provision in the final action NMFS will undermine the statute's mandate to end overfishing. Commenters asserted that fisheries managers have and will respecify SDC to justify circumventing rebuilding targets, and the final guidelines should establish a high burden of proof to modify SDC due to changing environmental conditions or ''regime change'' (citing Fritz & Hinckley 2005).

Response: Section 600.310(e)(2)(iii) of this final action is essentially the same as text at § 600.310(d)(4) in the current NS1 guidelines, except for clarifications noted below. There is no change in the usage of ''must'' between the current guidance and this final NS1 guidance at § 600.310(e)(2)(iii). NMFS believes that the requirement of NS2, that conservation and management measures be based on the best available science, applies to the establishment of SDC. Therefore, in cases where changing environmental conditions alter the long-term reproductive potential of a stock, the SDC must be modified. As stocks and stock complexes are routinely assessed, long-term trends are updated with current environmental, ecological, and biological data to estimate SDCs. NMFS allows for flexibility in these provisions to account for variability in both environmental changes and variation in a stock's biological reaction to the environment.

The guidelines include language requiring a high standard for changing SDC that is consistent with NMFS Technical Guidance (Restrepo *et al.* 1998). NMFS outlines the relationship of SDC to environmental change in both the short and long-term in

§ 600.310(e)(2)(iii) of the final action. Total mortality of fish stocks includes many factors other than fishing mortality. Short-term environmental changes may alter the size of a stock or complex, for instance, by episodic recruitment failures, but these events are not likely to change the reproductive biology or reproductive potential of the stock over the long-term. In this case the Council should not change the SDC. Other environmental changes, such as some changes in ocean conditions, can alter both a stock's short-term size, and alter long-term reproductive biology. In such instances the Councils are required to respecify the SDC based on the best available science and document how the changes in the SDC relate to reproductive potential. In all cases, fishing mortality must be controlled so that overfishing does not occur. NMFS notes that, depending on the impact of the environmental change on the stock, failure to respecify SDC could result in overfishing, or could result in failure to achieve OY. In both cases, the fishery would not meet the requirements of NS1.

One change from § 600.310(d)(4) of the current NS1 guidelines occurs in § 600.310(e)(2)(iii)(A) of this final action. NMFS clarified that SDC ''should not'' rather than ''need not'' be changed if the long-term reproductive potential of a stock has not been affected by a changing environment. NMFS feels that this is consistent with setting a high standard for changing the SDC due to environmental changes. In addition, this action changes the phrase ''long-term productive capacity'' from the current NS1 guidance to ''long-term reproductive potential.'' NMFS believes the latter phrase is clearer and more accurately reflects the language in MSA section 303(a)(10).

Any changes to SDC are subject to Secretarial approval (§ 600.310(e)(2)(iv) of the final action), and the NS1 guidelines set a high standard for respecification of SDC due to environmental change. The Council must utilize the best available science, provide adequate rationale, and provide a basis for measuring the status of the stock against these criteria, and the SDC must be consistent with § 600.310(e)(2)(iii) of the final action. If manmade environmental changes are partially responsible for the overfished condition, the Council should recommend restoration of habitat and ameliorative programs in addition to curtailing fishing mortality.

Comment 31: NMFS received several comments that state that by requiring reference points to be point estimates NMFS is not acknowledging the uncertainty inherent in fishery management science. The comments expressed that the best way to incorporate uncertainty was to express SDCs as ranges and not point estimates.

Response: NMFS believes that uncertainty in SDC, OFL, and other fishing level quantities is best dealt with by fully analyzing the probability that overfishing will occur and that the stock might decline into an overfished condition, but we recognize that such a full analysis is not possible in many data-limited situations. When using a probability based approach, the distribution of probabilities includes a point estimate and it extends along a range. A probability based approach is already used in many rebuilding plans, for example, what fishing level will provide at least a 70% chance that the stock will be rebuilt in 10 years. NMFS scientists are working on a technical document that will describe some of the currently available methods to do such calculations, as well as some proxy approaches that could be used in situations where available data and methods do not allow calculation of the probability distributions.

Comment 32: NMFS received a number of comments regarding the proposed description of the relationship between ACT and OY—that achieving the ACT on an annual basis would, over time, equate to the OY. Comments requested more clarification, or did not agree with the described ACT–OY relationship.

Response: NMFS has revised the final action to remove the requirement that ACT be established, and instead discussed how targets, including ACT, function within the system of AMs to prevent the ACL from being exceeded. NMFS has also removed the discussion about the relationship of ACT to OY, based on the comments received. The full range of conservation and management measures for a fishery, which include the ACL and AM provisions, are required to achieve the OY for the fishery on a continuing basis. NMFS interprets the phrase ''achieving, on a continuing basis, the optimum yield for each fishery'' to mean producing from each stock or stock complex or fishery a long-term series of catches such that the average catch is equal to OY, overfishing is prevented, the long-term average biomass is near or above B_{msy}, and overfished stocks and stock complexes are rebuilt consistent with timing and other requirements of section 304(e)(4) of the MSA and § 600.310(j) of the final NS1 guidelines. NMFS notes that for fisheries where stock abundance is below the level that can produce the OY without the fishing mortality rate exceeding the MFMT, the annual yield will be less than the long-term OY level. In the case of an overfished fishery, ''optimum'' with respect to yield from a fishery means providing for rebuilding to a level consistent with producing the MSY in such fishery. When stock abundance is above B_{msy}, a constant fishing mortality control rule may allow the annual catch to exceed the long-term average OY without overfishing occurring, but frequent stock assessments need to be conducted to update the level of stock abundance.

Comment 33: One commenter stated that ''OY equates with the acceptable biological catch (''ABC''), which in turn is the level at which ACL should be set.'' Another commenter stated that, in specifying ACLs, a Council should not exceed MSY, because MSY—as opposed to ABC—is the ''fishing level recommendation'' that should not be exceeded per MSA 302(h)(6).

Response: MSA includes the terms ''fishing level recommendations,'' ''acceptable biological catch,'' and ''annual catch limits'' but does not define them. As such, NMFS has considered how to interpret these provisions in light of the statutory text and taking into consideration public comment during scoping and in response to the proposed NS1 guidelines. NMFS believes that ABC refers to a level of ''catch'' that is ''acceptable'' given the ''biological'' characteristics of the stock or stock complex. As such, OY does not equate with ABC. The specification of OY is required to consider a variety of factors, including social and economic factors, and the protection of marine ecosystems, which are not part of the ABC concept. The Councils determine the ACL, which may not exceed the fishing level recommendations of its science advisors. Of the several required SSC recommendations (MSA 302(g)(1)(B)), the ABC is most directly applicable as the constraint on the Council's ACL. Although MSY and ABC are both derived from a control rule, the ABC is the appropriate constraint on ACL because it is the annualized result of applying that control rule (thus is responsive to current stock abundance) whereas the MSY is the expected long-term average from a control rule. The Council should generally set the ACL lower than the ABC to take into account other factors related to preventing overfishing or achieving OY, or it may set the ACL equal to the ABC and take these additional factors into account when setting an ACT below the ACL.

Comment 34: Several commenters stated that NMFS's definition

framework for ACLs contains buffers that are not required by the Magnuson-Stevens Act and reduce or prevent the likelihood that OY can be achieved for a stock (Reducing a stock's OFL for scientific and management uncertainty, and OY factors results in too many reductions and makes it too difficult to achieve OY).

Response: NMFS believes that fisheries managers cannot consistently meet the requirements of the MSA to prevent overfishing and achieve, on a continuing basis, OY unless they address scientific and management uncertainty. The reductions in fishing levels that may be necessary in order to prevent overfishing should be only the amount necessary to achieve the results mandated by the MSA. Properly applied, the system described in the guidelines does not result in ''too many deductions,'' but rather, sets forth an approach that will prevent overfishing, achieve on a continuing basis OY, and incorporate sufficient flexibility so that the guidelines can be applied in different fisheries.

Comment 35: Several commenters suggested that NMFS clarify language to ensure that all aspects of fishing mortality (e.g., dead discards and post-release mortality) are accounted for in the estimates of ABC or when setting the ACL, and that all catch is counted against OY. NMFS also received comments that accounting for bycatch mortality in data poor situations should not be required.

Response: NMFS agrees that all sources of fishing mortality, including dead discards and post-release mortality from recreational fisheries must be accounted for, but believes that language in § 600.310(e)(3)(v)(C), (f)(2)(i) and (f)(3)(i) in both the proposed and final action sufficiently explains that catch includes fish that are retained for any purposes, mortality of fish that have been discarded, allocations for scientific research, and mortality from any other fishing activity. NMFS, however, disagrees that, when bycatch data is lacking, managers could ignore this known source of fishing mortality. Ignoring a known source of fishing mortality because data are lacking leads to underestimating catch. Unless this is factored in—for instance, as increased uncertainty leading to more conservative ABC and appropriate AMs (including ACT control rules)—overfishing could occur. NMFS's National Bycatch Report (due to be published in late 2008 or early 2009) provides comprehensive estimates of bycatch of fish, marine mammals, and non-marine mammal protected resources in major U.S. commercial fisheries. For instances where the National Bycatch Report does not provide bycatch data, NMFS suggests developing proxies based on National Bycatch Report bycatch ratios in similar fisheries until better data are available. For more information on the National Bycatch Report, *see http://www.st.nmfs.noaa.gov/st4/nop/Outreach/NBR_Factsheet_Final.pdf*. However, the decision about the best methodology for estimating bycatch should be made by the Council in consultation with its SSC, considering the best available scientific information.

Comment 36: One commenter requested clearer guidance for the specification of ABC and ultimately an ACL in cases where scientific uncertainty ''overwhelms'' the SSC's ability to make a valid ABC recommendation.

Response: The NS1 Guidelines recognize that precise quantitative assessments are not available for all stocks and some stocks do not have sufficient data for any assessment beyond an accounting of historical catch. It remains important to prevent overfishing in these situations, even though the exact level of catch that causes overfishing is not known. The overall guidance is that when stocks have limited information about their potential yield, harvest rates need to be moderated until such information can be obtained. Possible approaches include setting the ABC as 75% of recent average catch; see NMFS' Technical Guidance in Restrepo *et al.* (1998). NMFS is currently working on a report on control rules that will provide additional examples of possible approaches for data-limited situations as well as approaches that can use a better set of information.

Comment 37: ABC and ACT control rules should be revised to require consideration of life history characteristics (e.g., productivity, geographic range, habitat preferences, etc.) of a stock when setting control rules or catch limits.

Response: NMFS agrees that the productivity of stock, as well as the stocks susceptibility to the fishery should be considered when developing the ABC control rule. NMFS refers to these factors together as the vulnerability of stock, which is defined in § 600.310(d)(10) of the final action. The ABC control rule (see § 600.310(f)(4) of the final action) is based on scientific knowledge about the stock, which includes a stock's vulnerability to the fishery.

Regarding the ACT control rule, the final guidelines do not require that ACTs always be established, but provide that ACTs may be used as part of a system of AMs. When used, ACT control rules address management uncertainty, which is not related to the productivity of the stock. As noted in § 600.310(g)(3) of the final action, however, a Council could choose a higher performance standard (e.g., a stock's catch should not exceed its ACL more often than once every five or six years) for a stock that is particularly vulnerable to the effects of overfishing. In considering the performance standard, a Council should consider if the vulnerability of the stock has been accounted for in the ABC control rule, so as not to double count this type of uncertainty and provide unduly cautious management advice.

Comment 38: NMFS received comments requesting that text in § 600.310(f) of the proposed action be modified to clarify that ABC may not equal or exceed OFL; Councils are required to establish ABC control rules; the ABC and ACT control rules must stipulate the stock level at which fishing will be prohibited; and ACL cannot equal or exceed the ABC.

Response: NMFS does not agree that the guidelines should prohibit ABC from being equal to OFL, or ACL from being equal to ABC. NMFS has added text to the guidelines (§ 600.310(f)(3) and (f)(4)) to clarify that it believes that ABC should be reduced from OFL in most cases, and that if a Council recommends an ACL which equals ABC, and the ABC is equal to OFL, the Secretary may presume that the proposal would not prevent overfishing, in the absence of sufficient analysis and justification for the approach. NMFS agrees that an ABC control rule is required. NMFS does not agree, however, that the ABC and ACT control rules must stipulate the level at which fishing is prohibited. Here it is important to distinguish between setting an annual level of catch equal to zero because the stock biomass is low, from prohibiting landings for the remainder of a fishing year because the ACL has already been achieved. For the first type of prohibition, an ABC control rule could stipulate the level at which fishing is prohibited due to low stock biomass, but such a low level of biomass is likely to be below the MSST which will invoke development of a rebuilding plan with associated modification of the ABC control rule for the duration of the plan. NMFS, however, disagrees that the ACT control rule should have a similar stipulation as the primary function of this control rule is to account for management uncertainty and to serve as the target for inseason management actions.

Comment 39: NMFS received several comments that spatial-temporal management of ACLs should be employed as an integral part of effective catch-limit management. The commenters noted that apportioning ACLs by seasons and areas could reduce bycatch, protect sensitive habitats, reduce competition among fishery sectors, avoid localized and serial depletions of stocks, and ensure geographic and seasonal availability of prey to key predators.

Response: NMFS acknowleges that spatial and temporal considerations of fishery removals from a stock can be important. Many fisheries currently incorporate spatial and temporal considerations. However, in the context of NS1, these considerations would be relevant only if the overfishing definition or the OY definition for a stock included spatial or temporal divisions of the stock structure. NMFS believes the guidelines give Councils flexibility to consider spatial and temporal issues in establishing ACLs for a stock, and does not agree that the NS1 guidelines need to specifically address this issue. Apportioning ACLs by seasons and areas could be considered as Councils develop conservation and management measures for a fishery to meet the full range of MSA requirements, including the NS for basing conservation and management measures upon the best scientific information available (NS2); taking into account the importance of fishery resources to fishing communities to provide sustained participation and minimize adverse economic impacts (NS8); minimizing bycatch (NS9); and allocating fishing privileges among various U.S. fishermen that are fair and equitable, reasonably calculated, and carried out in such a manner that no particular entity acquires an excessive share of the catch (NS4).

Comment 40: NMFS received several comments about the role of the SSC in specifying ABC. Several commenters stated that the final ABC recommendation should be provided by the SSC (i.e., final peer review process), rather than an additional peer review process. Some commenters expressed concern that both the SSC and peer review process would recommend an ABC, leaving the Council to use the lower of the two recommended ABC values. One comment stated that the SSC should have the discretion to recommend an ABC that is different from the result of the control rule calculation in cases where there was substantial uncertainty or concern relating to the control rule calculated ABC.

Response: NMFS agrees that the SSC should provide the final ABC recommendation to their Council. In the preamble of the proposed NS1 revisions, NMFS acknowledged that the statutory language could be subject to different interpretations (*see* p. 32532 of 73 FR 32526; June 9, 2008). MSA refers to not exceeding fishing level recommendations of ''scientific and statistical committee or peer review process'' in one place and SSC recommendations for ABC and MSY in another place. Compare MSA sections 302(h)(6) and 302(g)(1)(B). Section 302(g)(1)(E) of the MSA provides that the Secretary and a Council may, but are not required to, establish a peer review process. NMFS feels that the Council should not receive ABC recommendations from two different sources (SSC and peer review). In order to avoid confusion, and in consideration of the increased role of SSCs in the MSA, NMFS believes that the SSC should provide the ABC recommendation and Councils should establish a clear process for receiving the ABC recommendation (as described in § 600.310(f)(3) of this action). The advance notice of proposed rulemaking (ANPR) (73 FR 54132; September 18, 2008) for potential revision of the National Standard 2 Guidelines includes consideration of the relationship between SSCs and peer review processes. NMFS believes the roles of the peer review process and the SSC complement each other. For example, a peer review process may conduct an extensive technical review of the details of each stock assessment. The SSC can then use the assessment document and its peer review, consider unresolved uncertainties, seek consistency with assessment decisions made for other stocks in the region, and arrive at an ABC recommendation. In addition, NMFS agrees that SSCs could provide an ABC recommendation that differed from the result of the ABC control rule calculation based on the full range of scientific information available to the SSC. The SSC would have explain why the recommendation differed from the calculated value. NMFS has added clarifying language into § 600.310(f)(3) of this action.

Comment 41: NMFS received a variety of comments on the role of the SSC and suggestions that the SSC role should be clarified. Comments included: There should be a mandatory peer review of significant SSC recommendations; the SSC should be directed to draw information and recommendations from the broadest possible range of scientific opinion; the SSC recommendation should include a discussion of alternative recommendations that were considered and alternative methodologies that were explored; what is the role of the SSC in providing recommendations for achieving rebuilding targets?; what is the SSC's role in providing ''reports on stock status and health, bycatch, habitat status, social and economic impacts of management measures and sustainability of fishing practices''?; the rule should clarify that the SSC is not charged with actually collecting the data and writing reports; the guidelines should specify the appropriate qualifications and membership of the SSCs and peer review process; the guidelines should specify the relative roles of the SSCs, peer review process, and Councils in establishing ACLs; the guidelines should specify the relative roles of NMFS, the Councils, the SSCs and the peer review process in selecting and evaluating AMs; NMFS should establish formal criteria for SSC membership, including formal training and/or experience in fisheries and/or ecological science or economics; NMFS should create oversight mechanisms and responsibility within NMFS to ensure that members are both qualified and acting in the public interest rather than representing stakeholders; NMFS should provide adequate training programs so that new members are well-prepared to meet these challenges; and NMFS should provide a mechanism for SSC members to identify and challenge political interventions, including potentially the development of a new scientific appeal function, staffed by a board of objective, external expert scientists.

Response: In developing the NS1 guidelines, NMFS focused on the SSC recommendation of the ABC as it is an important reference point for the Councils to use when developing ACLs. NMFS feels that the NS1 guidelines as proposed are clear in that the SSC provides the ABC recommendation and the Councils establish the ACLs. Both the ABC control rules and the ACT control rules could be developed with input from the SSC, Council, and peer review process as appropriate. NMFS believes that the NS1 guidelines adequately address the requirements for SSC recommendations that pertain to NS1. NMFS believes that other specific roles of the SSC would be more appropriately addressed in the National Standard 2 (NS2) guidelines.

Comment 42: Some commenters supported the proposed guidelines regarding the SSC, its relation to the Council, and provision of science advice such as ABC, but requested that the

guidelines further emphasize that managers follow the advice of their scientific advisors in all cases when setting catch limits. Other commenters opposed the provisions and stated that accounting for scientific uncertainty is a matter of policy, not science and therefore should be delegated to the Council. Instead, the commenters proposed that the SSC should be recommending the OFL and that the Council may not set an ACL in excess of the OFL as determined by the SSC.

Response: NMFS believes that determining the level of scientific uncertainty is not a matter of policy and is a technical matter best determined by stock assessment scientists as reviewed by peer review processes and SSCs. Determining the acceptable level of risk of overfishing that results from scientific uncertainty is the policy issue. The SSC must recommend an ABC to the Council after the Council advises the SSC what would be the acceptable probability that a catch equal to the ABC would result in overfishing. This risk policy is part of the required ABC control rule. The Council should use the advice of its science advisors in developing this control rule and should articulate the control rule in the FMP. In providing guidance on establishing a control rule for the ABC, NMFS recognizes that all estimates of the OFL are uncertain, and that in order to prevent overfishing with more than a 50 percent probability of success, the ABC must be reduced from the OFL. The guidance is clear that the control rule policy on the degree of reduction appropriate for a particular stock is established by the Council. To the extent that it results in the ABC being reduced from the OFL, the SSC is carrying out the policy established by the Council. NMFS disagrees that the SSC should recommend OFL and not ABC. The MSA specifies a number of things that make up the recommendations that SSCs provide to their Council including recommendations for ABC, preventing overfishing, MSY, achieving rebuilding targets, reports on stock status and health, bycatch, habitat status, social and economic impacts of management measures, and sustainability of fishing practices. Of these, the ABC is directly relevant as the fishing level recommendation that constrains the ACL.

Comment 43: One comment expressed that Councils must be allowed to specify information needed in the SAFE report.

Response: NMFS agrees. NMFS has removed the following sentence from § 600.310(b)(2)(v)(B) of the final action: ''The SSC may specify the type of information that should be included in the Stock Assessment and Fishery Evaluation (SAFE) report (see § 600.315).''

The contents of the SAFE report fall under the purview of the National Standard 2 (NS2) guidelines. NMFS is currently considering revising the NS2 guidelines, including modification of the language describing the content and purpose of SAFE reports. NMFS recently published an advance notice of proposed rulemaking (73 FR 54132; September 18, 2008) to revise the NS2 guidelines and encourages the public to provide comment.

Comment 44: One commenter believed the ACT should be a suggested component of a fishery management plan rather than a mandated component of an FMP. Although the ACT may clearly distinguish management uncertainty from other sources of uncertainty, adding a target does not fundamentally improve the process. It is more important to correctly adjust the ACL based on actual performance data than to create a separate target or ACT control rule based on theory to account solely for management uncertainty.

Response: The final guidelines do not require that ACTs always be established, but provide that ACTs may be used as part of a system of AMs. NMFS disagrees that a target does not fundamentally improve the process. ACL is to be treated as a limit—an amount of catch that the fishery should not exceed. The purpose of utilizing an ACT is so that, given uncertainty in the amount of catch that will result from the conservation and management measures in the fishery, the ACL will not be exceeded. Whether or not an ACT is explicitly specified, the AMs must address the management uncertainty in the fishery in order to avoid exceeding the ACL. ACLs are subject to modification by AMs.

Comment 45: One comment stated that the purpose of an ACT is to address ''management uncertainty'' which seems to be a very abstract and unquantifiable concept that the Councils are likely to struggle with.

Response: NMFS disagrees that management uncertainty is an abstract concept. It relates to the difference between the actual catch and the amount of catch that was expected to result from the management measures applied to a fishery. It can be caused by untimely catch data that usually prevents inseason management measures from being effective. Management uncertainty also results from underreporting, late reporting and misreporting and inaccurate assumptions about discard mortality of a stock in commercial and recreational fisheries. One way to estimate management uncertainty is to examine a set of annual actual catches compared to target catches or catch quotas for a stock. If all or most of the catches fall closely around their target catches and don't exceed the OFL then management uncertainty is low; if actual catches often or usually result in overfishing then the management uncertainty is high and should be accounted for when establishing the AMs for a fishery, which may include setting an ACT.

Comment 46: NMFS received several comments regarding scientific and management uncertainty. In general these comments included: Clarify the meaning of scientific uncertainty; clarify that some types of uncertainty may not be considered in the ABC control rule process; increase research efforts in order to deal with scientific uncertainty; provide flexibility in the guidelines regarding how the Councils deal with uncertainty; and recognize that recreational fisheries are unduly impacted by the guidelines due to delayed monitoring of catch.

Response: Scientific uncertainty occurs in estimates of OFL because of uncertainty in calculations of MFMT, projected biomass amounts, and estimates in F (i.e., confidence intervals around those parameter estimates). In addition, retrospective patterns in estimates of future stock biomass and F (i.e., biomass may be overestimated and F underestimated on a regular basis) occur in some stock assessments and should be accounted for in determining ABC. NMFS revised the guidelines to make clear that all sources of scientific uncertainty—not just uncertainty in the level of the OFL—must be considered in establishing the ABC, and that SSCs may incorporate consideration of uncertainty beyond that specifically accounted for in the ABC control rule, when making their ABC recommendation. Management uncertainty should be considered primarily in establishing the ACL and AMs, which could include ACTs, rather than in specification of the ABC.

Comment 47: The definition of ABC in § 600.310(f)(2)(ii) of the proposed rule provides that ABC is a level of catch ''that accounts for scientific uncertainty in the estimate of OFL'' and is specified based on the ABC control rule. Scientific uncertainty is not and should not be limited to the estimate of OFL. That restriction would make it more difficult to implement other appropriate methods for incorporating scientific uncertainty in other quantities such as distribution of long term yield.

Response: NMFS agrees. NMFS has revised §§ 600.310(f)(2)(ii), (f)(2)(iii),

and (f)(4) of the action to state that ABC accounts for scientific uncertainty in the estimate of OFL and other scientific uncertainty.

Comment 48: Several commenters stated that buffers, or margins of safety, need to be required between the overfishing level and annual catch limits to account for uncertainty, and that the final action should require the use of such buffers to achieve a high probability that overfishing does not occur. NMFS received comments suggesting that buffers between limit and target fishing levels reduce the chance that overfishing will occur and should be recognized as an accountability measure. Other commenters thought that the provision for setting ACT less than ACL meant that a Council has no discretion but to establish buffers. They said that while buffers may be appropriate in certain circumstances, they may also prevent achievement of OY in some circumstances.

Response: As noted elsewhere, NMFS has revised the final guidelines: they do not require that ACTs always be established, but provide that ACTs may be used as part of a system of AMs. The guidelines are intended only to provide Councils with direction on how the requirements of NS1 can be met, incorporating the requirement for ACLs and AMs such that overfishing does not occur. To prevent overfishing, Councils must address scientific and management uncertainty in establishing ABC, ACLs, and AMs. In most cases, some reduction in the target catch below the limit will result. NMFS does not believe that requiring buffers is appropriate, as there may be circumstances where that is not necessary to prevent overfishing. However, the guidelines require that AMs in a fishery be adequate to prevent ACLs from being exceeded, and that additional AMs are invoked if ACL is exceeded.

Comment 49: Some commenters stated that Councils needed flexibility to effectively tailor fishery management plans to the unique conditions of their fisheries, and that Councils should also have flexibility in how to account for scientific and management uncertainty.

Response: NMFS agrees that Councils should have flexibility, so long as they meet the requirements of the statute. ACLs to prevent overfishing are required, and management and scientific uncertainty must be considered and addressed in the management system in order to achieve that objective. NMFS also believes that Councils should be as transparent and explicit as possible in how uncertainty is determined and addressed, and believes the guidelines provide a good framework to meet these objectives.

Comment 50: One commenter supported NMFS' attention to scientific and management uncertainty, but thought that the better approach to deal with uncertainty is to reduce uncertainty. They stated that to accomplish this objective NMFS must increase its support for agency scientific research specific to stock assessments and ecosystem science.

Response: NMFS agrees. However, the processes proposed in the guidelines will address the current levels of uncertainty and accommodate reduced uncertainty in the future, as improvements in data are made.

Comment 51: Some commenters said that implementing ACLs would lead to economic disruption, particularly in the recreational fishing sector, because of a large degree of management uncertainty. One commenter cited difficulties in obtaining timely and accurate data, particularly for recreational fisheries, and asked if recreational allocations would have to be reduced due to delays in obtaining recreational harvest estimates.

Response: Preventing overfishing is a requirement of the MSA. The ACL mechanisms and AMs for a fishery must be adequate to meet that requirement, and in some cases, reductions in catch levels and economic benefits from a fishery may result. The specific impacts of implementing ACLs in a fishery will be analyzed when the ACLs are established in an FMP.

Comment 52: One commenter stated that the guidelines would require reducing catches well below existing OY levels, and that many species are known to be fished at low levels which are highly unlikely to lead to overfishing. They stated that this is inconsistent with responsible marine management and seems unlikely to represent the intent of Congress.

Response: Nothing in the guidelines would require a reduction in fishing if, in fact, the stocks are fished at low levels which are highly unlikely to lead to overfishing, and this conclusion is supported by science.

Comment 53: One commenter asked if OY could be specified for a fishery or a complex, or if the guidelines would require specification of OY for each species or complex.

Response: The guidelines provide that OY can be specified at the stock, stock complex or fishery level.

Comment 54: NMFS received several comments both supporting and opposing the use of inseason AMs (§ 600.310(g) of the proposed action). The commenters that supported the use of inseason AMs typically suggested that the Councils and NMFS improve their capability to use inseason AMs and/or that NMFS must make inseason closure authority a required element of FMPs. Opponents of inseason AMs commented that it is more reasonable to implement AMs after reviewing annual fishery performance data; there is no requirement in the law to impose inseason measures; inseason closures without individual transferable quotas will generate derby fisheries; and the requirement to use inseason AMs whenever possible would be difficult where monitoring data is not available.

Response: MSA provides for ACLs to be limits on annual catch, thus it is fully appropriate and consistent with the Act that available data be utilized to prevent ACLs from being exceeded. Conservation and management measures for a fishery should be designed so that ACLs are not routinely exceeded. Therefore, FMPs should contain inseason closure authority giving NMFS the ability to close fisheries if it determines, based on data that it deems sufficiently reliable, that an ACL has been exceeded or is projected to be reached, and that closure of the fishery is necessary to prevent overfishing. NMFS believes that the alternative result, which is that data are available inseason that show an ACL is being exceeded, but no management action is taken to prevent overfishing, would not meet the intent of the MSA. The MSA requires ACLs in all fisheries. It does not provide an exemption based on a concern about derby fishing. NMFS has modified the language in § 600.310(g)(2) of this action to indicate that ''For fisheries without inseason management control to prevent the ACL from being exceeded, AMs should utilize ACTs that are set below ACLs so that catches do not exceed the ACL.''

Comment 55: NMFS received some comments that generally expressed that AMs will be difficult to implement and that the provisions need to be clarified. Comments included: if an ACL is exceeded, a review by the Council must occur before implementation of the AMs; the Council must examine the ''problem'' that caused the overage—which means nothing will happen quickly; and it is not clear what ''biological consequences'' means in § 600.310(g)(3) of the proposed action.

Response: As proposed, AMs are management measures designed to prevent an ACL from being exceeded, as well as measures to address an overage of an ACL if it does occur. NMFS recommends that, whenever possible, Councils implement AMs that allow inseason monitoring and adjustment of

the fishery. The AMs should consider the amount of time required for a Council to conduct analyses and develop new measures. In general, AMs need to be pre-planned so they can be effective/available in the subsequent year, otherwise, there could be considerable delay from the time that an overage occurs to the time when measures are developed to address the overage. Not all overages may warrant the same management response. Consider hypothetically the example of a fishery for which a 3 fish bag limit with 16 inch minimum size is expected to achieve the target catch level without exceeding the ACL. For such a fishery, the Council might implement AMs such that, if the catch was under the ACL or exceeded it by less than 5 percent, the same bag and size limits would apply the following year. If the ACL was exceeded by 5–25 percent, the bag limit the following year would be reduced to 2 fish, and if the ACL was exceeded by more than 25 percent the bag limit would be reduced to 1 fish. The AMs could also address a situation where catch was below the target level, indicating that the initial measures might be too strict. The objective is to have pre-planned management responses to ACL overages that will be implemented in the next season, so that flawed management measures do not result in continuing overages for years while Councils consider management changes. An FMP must contain AMs (see § 600.310(c)(5) of the final action). However, NMFS believes that the FMP could contain more general framework measures and that specific measures, such as those described hypothetically above, could be implemented through harvest specifications or another rulemaking process.

By ''biological consequences,'' NMFS means the impact on the stock's status, such as its ability to produce MSY or achieve rebuilding goals. For example, if information was available to indicate that, because of stronger than expected recruitment, a stock was above its B_{msy} level and continued to grow, even though the ACL was exceeded for the year, that could indicate that the overage did not have any adverse biological consequences that needed to be addressed through the AM. On the other hand, if the ACL for a long lived stock with low reproductive potential was exceeded by 100 percent, AMs should be responsive to the likelihood that some long-term harm to the stock may have been caused by the overage.

Comment 56: One commenter expressed concern about the term ''re-evaluated'' in §§ 600.310(g)(3) and (g)(4) in the proposed action. They stated that this could imply that Councils simply have to increase ACLs when they have ACL exceedances, and suggested that, if catch exceeds ACL more than once in last four years, there should be automatic buffer increases in setting ACL below OFL to decrease likelihood of exceeding ACL.

Response: If the performance standard is not met, the Councils must re-evaluate the system of ACLs and AMs, and modify it if necessary so that the performance standard is met. Since the ACL cannot exceed the ABC recommended by the SSC, NMFS does not believe that the scenario described by the commenter would arise. NMFS also does not believe that the guidelines should recommend automatic buffer increases in this case. The specific factors that caused the performance standard to not be met need to be analyzed and addressed. NMFS also notes that, in addition to this re-evaluation of the system of ACLs and AMs, AMs themselves are supposed to prevent and address ACL overages.

Comment 57: Several comments were received related to accountability measures for when catch exceeds the ACL. Some comments supported the concept that a full payback of ACL overages should be required for all stocks. Comments included: Overage deductions should be normal business for rebuilding and healthy stocks alike; NMFS should require all overages to be accounted for in full for all managed fisheries no later than when the ACL for the following fishing year is determined; and overage deductions must be viewed as an independent requirement from actions geared to preventing overages from occurring in the future, such as modifications of management measures or changes to the full system of ACLs, ACTs, and AMs.

Response: MSRA is silent with regard to mandatory payback of ACL overages. However, in developing the ACL provisions in the MSRA, it appears that Congress considered mandatory paybacks and did not include that requirement in the MSRA. NMFS believes that paybacks may be an appropriate AM in some fisheries, but that they should not be mandated, but rather considered on a case by case basis for stocks and stock complexes that are not in a rebuilding plan.

Comment 58: Several comments opposed the concept of an overage adjustment when catch exceeds the ACL for stocks that are in rebuilding plans (§ 600.310(g)(3) of the proposed action). Comments included: The MSA does not require this, this provision was removed from the drafts of the MSRA, and a full ''payback'' the following year may be unnecessary. Other comments supported the concept but wanted to strengthen § 600.310(g)(3) of the guidelines to remove text that stated: ''unless the best scientific information available shows that a reduced overage adjustment, or no adjustment, is needed to mitigate the effects of the overages.''

Response: NMFS believes that more stringent requirements for AMs are necessary for stocks in rebuilding plans. MSA 304(e)(3) provides that, for overfished stocks, an FMP, FMP amendment, or proposed regulations are needed to end overfishing immediately in the fishery and rebuild overfished stocks. There are a number of examples where failure to constrain catch to planned levels early in a rebuilding plan has led to failure to rebuild and the imposition of severe catch restrictions in later years in order to attempt to meet the required rebuilding timeframe. Thus, for rebuilding stocks, NMFS believes that an AM which reduces a subsequent year's ACL by the amount of any overage is appropriate, and will help prevent stocks failing to rebuild due to annual rebuilding targets being exceeded. NMFS does provide that if there is an analysis to show that all or part of the deduction is not necessary in order to keep the stock on its rebuilding trajectory, the full overage payback is not necessary. For example, an updated stock assessment might show that the stock size has increased faster than expected, in spite of the overage, and that a deduction from the subsequent ACL was not needed. For most rebuilding stocks, assessments cannot be updated annually, and in the absence of such analytical information, NMFS believes that the guideline provision is necessary to achieve rebuilding goals for overfished stocks.

Comment 59: Some commenters expressed support for the AMs as proposed and agreed that AMs should prevent catch from exceeding the ACL and address overages if they should occur. Other commenters suggested that AMs should be tied to overfishing or that AMs should be triggered when catch exceeds the ABC (as opposed to the ACL). Some commenters expressed that the MSA does not require the application of AMs if the ACL is exceeded.

Response: In developing the guidelines, NMFS considered using OFL or ABC as a point at which mandatory AMs should be triggered. However, NMFS believes that Congress intended the ACL to be a limit, and as such, it should not be exceeded. In addition, ''measures to ensure accountability'' are required in association with the ACL in MSA section 303(a)(15). Therefore, it is

most appropriate to apply AMs if the ACL is exceeded. In addition, the purpose of ACLs is to prevent overfishing, and AMs triggered at the ACL level should be designed so that the ABC and OFL are not exceeded.

Comment 60: Several comments were received regarding the proposed performance standards. The performance standard that NMFS proposed in the proposed action stated that: ''If catch exceeds the ACL more than once in the last four years, the system of ACLs, ACTs and AMs should be re-evaluated to improve its performance and effectiveness.'' In cases where AMs are based on multi-year average data, the proposed performance standard stated: ''If average catch exceeds the average ACL more than once in the last four years, then the ACL, ACT and AM system should be re-evaluated.'' The commenters that supported the proposed performance standard suggested that it would allow the Council more flexibility in the management of their fisheries with ACLs. Commenters that disliked the proposed performance standard suggested that the Councils should have more flexibility in determining the performance standards, expressed concerns that the performance standard may not be precautionary enough, or expressed that it was arbitrary.

Response: NMFS believes it is important to establish a performance standard to establish accountability for how well the ACL mechanisms and AMs are working that is consistent across all Councils and fisheries. NMFS believes that ACLs are designed to prevent overfishing and that it is important to prevent catches from exceeding ACLs. NMFS also believes that, given scientific and management uncertainty, it is possible that catch will occasionally exceed ACL for a given stock or stock complex. However, it would be unacceptable to allow catch to continually exceed ACL. Therefore, NMFS proposed the performance standard to allow for some flexibility in the management system but also prevent overfishing. It should not limit a Council from establishing stronger performance measures, or from reevaluating their management measures more often. Notwithstanding the performance standard, if, at any time, a Council determines that the conservation and management measures for a fishery are not achieving OY while preventing overfishing, it should revise the measures as appropriate.

Comment 61: Several comments were received that suggested that fishery managers should or be required to re-evaluate the system of ACLs, ACT and AMs every time catch exceeds ACL. In addition, some expressed that NMFS should make clear that the ''reevaluation'' called for in the proposed action does not authorize simply raising ACLs or other numeric fishing restrictions in order to avoid the inconvenient fact that they have been exceeded.

Response: NMFS does not agree that a re-evaluation of the entire system of ACLs and AMs should be required every time an ACL is exceeded. If catch exceeds ACL in any one year, or if the average catch exceeds the average ACL, then AMs will be implemented and they should correct the operational issues that caused the overage, as well as any biological consequences resulting from the overage. Councils should be allowed the opportunity to see if their AMs work to prevent future overages of the ACL.

Comment 62: NMFS received comments that requested clarification or changes to the proposed performance standard. For example, one commenter suggested that NMFS should require a higher performance standard for vulnerable stocks. Two commenters expressed that the performance standard should apply at the stock or stock complex level as opposed to the fishery or FMP level. Another commenter questioned if the performance standard was if catch exceeds the ACL more than once in the last four years or if average catch exceeds the average ACL more than once in the last four years. NMFS also received some comments about the phrase ''to improve its performance and effectiveness'' in paragraph § 600.310(g)(3) of the proposed action. Those comments included: The phrase does not make sense in this context, because simply re-evaluating a system cannot improve its performance or effectiveness (only changing a system can do so); and use of this phrase in § 600.310(g)(3) is inconsistent with a similar sentence in paragraph § 600.310(g)(4) of the proposed action, where the same requirement is expressed, but this phrase does not appear.

Response: NMFS stated in the preamble of the proposed guidelines that a Council could choose a higher performance standard for a stock that is particularly vulnerable to the effects of overfishing. While NMFS agrees that a higher performance standard could be used for a stock or stock complex that is particularly vulnerable, NMFS believes the discretion to use a higher performance standard should be left to the Council. To reiterate this point, NMFS is adding additional language in § 600.310(g)(3) of the final action. NMFS intended that the performance standards would apply at the stock or stock complex level and is adding additional clarifying language in the regulatory text. The National Standard 1 guidelines as proposed offered two performance standards, one applies when annual catch is compared to the ACL for a given stock or stock complex, as described in paragraph § 600.310(g)(3) of this action, the other performance standard applies in instances when the multi-year average catch is compared to the average ACL, as described in § 600.310(g)(4) of this action. NMFS intended that in both scenarios, if the catch exceeds the ACL more than once in the last four years, or if the average catch exceeds the average ACL more than once in the last four years, then the system of ACLs and AMs should be re-evaluated and modified if necessary to improve its performance and effectiveness. NMFS has modified language to § 600.310(g)(3) and (4) of this action to clarify this issue.

Comment 63: NMFS received several suggestions to require a specific and high probability of success in either preventing overfishing, preventing catch from exceeding the ACL, or achieving the ACT. Comments included: The rule should make clear that management measures must have a high probability of success in achieving the OY or ACT; we recommend a probability of at least eighty percent of achieving the OY or ACT; NMFS should establish a performance standard that defines low risk, as well as an acceptable probability of successfully managing catch levels of 90 percent; National Standard guidelines should explicitly define the maximum acceptable risk of overfishing. One commenter cited to several court cases (NRDC v. Daley, Fishermen's Dock Coop., and Coastal Conservation Ass'n) and stated that the ACT control rule should be revised to state that the risk of exceeding the ACL due to management uncertainty is no greater than 25 percent.

Response: Considering and making appropriate allowances for uncertainty in science and management is emphasized in the NS1 guidelines. NMFS believes that, if this is done, ACLs will not often be exceeded, and when they are, the overages will typically be small and will not jeopardize the status of the stock. Fisheries where ACLs are exceeded regularly or by large amounts should be quickly modified to improve the measures.

During the initial scoping period, NMFS received many comments on the topic of setting a specific probability of success; some commenters expressed that a 50 percent probability of success is all that is legally required, while other

commenters expressed that the probability of success should be higher (e.g. 75 or 100 percent). When developing the definition framework of OFL, ABC, ACL, and ACT, NMFS considered including specific probabilities of success regarding preventing overfishing or preventing catch from exceeding ACL. NMFS did not specify a particular probability in the NS1 guidelines, for a number of reasons. NMFS did not believe it had a basis for picking a specific probability number that would be appropriate for all stocks and stock complexes in a fishery. Councils should analyze a range of alternatives for the probability that ACL will not be exceeded or that overfishing will not occur. NMFS recognizes that fisheries are different and that the biological, social and economic impacts of managing at a specific probability will differ depending on the characteristics of the fishery. NMFS also recognizes that it is not possible to calculate a probability of success in many fisheries, due to data limitations.

NMFS does not believe that MSA and relevant case law require use of specific probabilities. However, a 50 percent probability of success is a lower bound, and NMFS believes it should not simply be used as a default value. Therefore, in § 600.310(f)(4) of the final action, NMFS states that the determination of ABC should be based, when possible, on the probability that catch equal to the stock's ABC would result in overfishing, and that this probability cannot exceed 50 percent and should be a lower value.

To determine if the system of ACLs was working adequately, NMFS decided to establish a performance standard in terms of the frequency that ACLs were exceeded. The comparison of catch to an ACL is a simpler task than calculating a probability of success, and can be applied to all fisheries, albeit some fisheries have more timely catch data than others. This does not preclude the Councils from using the probability based approach to setting limits and targets in their fisheries if they are able to do so.

Comment 64: Several comments were received urging NMFS to either require or encourage the use of sector ACLs and AMs and hold each sector accountable. Comments expressed that to provide the right incentives for conservation, catch reductions and increases must be tied to compliance and performance in adhering to ACLs. One commenter stated that MSA 303(a)(14) compels distinct ACLs and AMs for each sector due in part to the variation in management uncertainty among sectors. Sector management should be required in FMPs to ensure equitable treatment for all stakeholder groups including harvest restrictions and benefits to each sector.

Response: Separate ACLs and AMs for different fishery sectors may be appropriate in many situations, but the Councils should have the flexibility to determine this for each fishery. The decision to use sectors should be at the discretion of each Council. NMFS agrees that, if Councils decide to use sectors, each sector should be held accountable if catches for a sector exceed sector-ACLs. In addition, the NS1 guidelines provide that the ACL/AM system must protect the stock or stock complex as a whole. NMFS does not believe that MSA necessarily compels use of sector ACLs and AMs, thus the final action does not require their use. However, in developing any FMP or FMP amendment, it is important to ensure consistency with MSA 303(a)(14), NS 4, and other MSA provisions. Section 303(a)(14) pertains to allocation of harvest restrictions or recovery benefits fairly and equitably among commercial, recreational, and charter fishing sectors. NS 4, in part, pertains to fair and equitable allocations.

Comment 65: Some commenters expressed that managing recreational fisheries with ACLs and AMs will be difficult as they typically lack timely data. Comments included: The initiative to set ACLs and AMs for any fishery that has a recreational component cannot be done and any attempt will be arbitrary at best; in-season management is impractical in most recreational fisheries; current data collection programs used to evaluate recreational fishing activity do not offer a level of confidence to fisheries managers or fishermen to implement ACL in the recreational sector; and NMFS should improve recreational data collection to a level where inseason management is possible.

Response: NMFS acknowledges that recreational fisheries often do not have timely catch data and that is why NMFS suggested the multi-year averaging provision for AMs. NMFS and the Council still need to meet the mandate of the MSA and have ACLs for all fisheries. NMFS is developing a new data collection program for recreational fisheries to improve the data needed to implement the new provisions of the MSA.

Comment 66: Some commenters suggested that for recreational fisheries, catch limits should be expressed in terms of fishing mortality rates or in terms of numbers of fish instead of pounds of fish.

Response: NMFS intends that ACLs be expressed in terms of weight or numbers of fish. In fact, the definition of ''catch'' in the proposed guidelines indicates that catch is measured in weight or numbers of fish. NMFS disagrees that ACL can be expressed in terms of fishing mortality rates. While conservation and management measures for a fishery can be designed to achieve a target fishing mortality rate, the fishing mortality rates that are achieved can only be estimated by performing a stock assessment. Stock assessments usually lag the fishery by a year or more, and are not suitable as the basis for ACL accountability measures.

Comment 67: One commenter suggested that when recreational fisheries account for a significant portion of the catch, the buffers should be correspondingly larger to account for the management uncertainty.

Response: NMFS believes that management uncertainty should be addressed in all fisheries. Accountability measures may include an ACT set below the ACL based on the degree of uncertainty that the conservation and management measures will achieve the ACL. This applies to all fisheries, commercial or recreational.

Comment 68: NMFS received a few comments expressing that Councils should have flexibility when specifying AMs.

Response: NMFS agrees and believes that the guidelines provide this flexibility.

Comment 69: AMs should be approved by the Secretary of Commerce, should be subject to regular scientific review, and should provide opportunities for public comment; performance must be measurable and AMs must be modified if not working; AMs should be reviewed annually as part of the catch specification process.

Response: AMs will be implemented through public processes used for amending FMPs and implementing regulations. There is no need for additional guidance in the NS1 guidelines.

Comment 70: NMFS received comments that support the use of AMs based on comparisons of average catch to average ACL, if there is insufficient data to compare catch to ACL, either inseason or on an annual basis. In recreational fisheries, the use of a three-year rolling average ACL would moderate wild swings in ACLs due to variable fishing conditions and participation from year to year. Flexibility, such as the use of a multi-year average for the recreational sector, is needed due to limitations in the data collection. However, some commenters

expressed concerns about using the multi-year averaging approach and stated that it should be used rarely. In order to use such an approach, Councils should provide clear and compelling reasons in their FMPs as to why the use of multi-year average data are necessary and a plan for moving the fishery to AMs based on annual data. The guidelines should make it clear that AMs will be triggered annually in cases where the average catch exceeds the average ACL. NMFS should engage its quantitative experts in an investigation of the performance of using multi-year averages for managing highly variable fisheries with poor inseason data. Until such results are available, NMFS should use annual statistics for management of all fisheries, including those involving highly variable stocks or catch limits.

Response: Use of AMs based on comparison of average catch to average ACL is only appropriate in a limited number of fisheries, such as fisheries that have high variability in the estimate of total annual catch or highly fluctuating annual catches and no effective way to monitor and control catches inseason. NMFS intends that a comparison of the moving average catch to the average ACL would be conducted annually and that AMs would be implemented if average catch exceeds the average ACL. If the average catch exceeds the average ACL more than once in the last four years, then the system of ACLs and AMs should be re-evaluated and modified if necessary to improve its performance and effectiveness. NMFS agrees that the Council should analyze and explain why they are basing AMs on multi-year averaged data. NMFS has added clarifying language to § 600.310(g)(4) of the final action to make these points clear. Future improvements in data and management approaches should also be pursued so that true annual accountability for catch can be achieved. In addition, NMFS believes that AMs such as the use of ACT may be appropriate in fisheries that use the multi-year averaging approach.

Comment 71: Several comments were received regarding ACLs and AMs for fisheries that occur partly in state waters. Some comments stated that accountability measures for State-Federal fisheries could use further elaboration and should specifically address fisheries where management had been delegated to the state. Some commenters supported separate ACLs and AMs for Federal and state portions of the fishery, while others wanted combined overall ACLs and AMs. Some comments disagreed that closure of Federal waters while fishing continues in non-Federal waters is a preferred option, and that efforts should be made to undertake cooperative management that allows coordinated responses.

Response: When stocks are co-managed by Federal, state, tribal, and/or territorial fishery managers, the goal should be to develop collaborative conservation and management strategies to prevent overfishing of shared stocks and ensure their sustainability. NMFS encourages collaboration with state managers to develop ACLs and AMs that prevent overfishing of the stock as a whole. As FMPs currently consider whether overfishing is occurring for a stock or stock complex overall, NMFS thinks it is appropriate to specify an overall ACL for the stock or stock complex. This ACL could be subdivided into state and Federal ACLs, similar to the approach used for sector-ACLs. However, NMFS recognizes that Federal management authority is limited to that portion of the fishery under Federal jurisdiction and therefore the NS1 guidelines only require AMs for the Federal fishery. The AMs could include closing the EEZ when the Federal portion of the ACL is reached, closing the EEZ when the overall stock or stock complex's ACL is reached, or other measures. NMFS recognizes the problem that may occur when Federal fisheries are closed but fishing continues in state waters. NMFS will continue to work with states to ensure consistency and effectiveness of management measures. If Councils delegate management under an FMP to the states, the FMPs still need to meet the requirements of the MSA, including establishment of ACLs and AMs.

Comment 72: One commenter asked, in the case where ACLs are exceeded because of the regulatory failures of one state, if other states in the Council's or the Atlantic States Marine Fisheries Commission's (ASMFC) area of jurisdiction be affected through mandatory AMs. Barring state-by-state allocations for all species (as with summer flounder), the proposed regulations could punish commercial fishermen and anglers in all states in a region.

Response: The guidelines acknowledge that NMFS and the Councils cannot mandate AMs on state fisheries. However, NMFS encourages collaboration between state and Federal managers to develop ACLs and AMs to prevent overfishing for the stock as a whole. In cases where there is collaboration, accountability measures for the fishery should be designed to address this issue. Specific AMs that may be needed would have to be evaluated and addressed on a case-by-case basis.

Comment 73: NMFS received a question regarding the meaning of the phrase ''large majority'' in § 600.310(g)(5) of the proposed action. NMFS had stated that: ''For stocks or stock complexes that have a large majority of harvest in state or territorial waters, AMs should be developed for the portion of the fishery under Federal authority and could include closing the EEZ when the Federal portion of the ACL is reached, or the overall stock's ACL is reached, or other measures.'' The commenter stated that the meaning of the term ''large majority'' and its importance is not clear and should therefore be eliminated.

Response: NMFS agrees that ACL and AMs need to be established for all stocks and stock complexes in Federal fisheries regardless of the whether a large majority of harvest occurs in state waters. NMFS agrees the amount, *i.e.*, ''large majority,'' is not pertinent to this provision. Therefore, § 600.310(f)(5)(iii) and (g)(5) have been revised in the final action.

Comment 74: NMFS received several comments noting that NMFS should require or recommend the use of limited access privilege programs (LAPPs) or catch shares by Councils in the final rule. Many commenters referenced an article on catch shares (Costello *et al.* 2008).

Response: The article cited above and other articles note the potential benefits of LAPPs. NMFS supports use of LAPPs, and believes they can be a beneficial approach to use in implementing effective ACLs. However, while ACLs are required in all fisheries, under the MSRA, LAPPs are optional and at the discretion of each Council. NMFS does not have authority to require Councils to use LAPPs, but is currently developing guidelines on LAPPs that will be published for public comment in the future.

Comment 75: One comment requested that NMFS expand the concept of accountability measures to include effective catch monitoring, data collection and analysis, and enforcement. The commenter suggested that for accountability measures that are not LAPPs, managers should demonstrate how the measures will ensure compliance with the ACLs as well as improve data and enforcement, reduce bycatch, promote safety, and minimize adverse economic impacts at least as well as LAPPs.

Response: NMFS agrees that catch monitoring, data collection and analysis, and enforcement are all important to consider in developing

AMs for a fishery and believes the guidelines are adequate. Under § 600.310(i) of the final action, FMPs, or associated documents such as SAFE reports, must describe data collection methods. In addition, § 600.310(g)(2) of the final action, states that whenever possible, inseason AMs should include inseason monitoring and management measures to prevent catch from exceeding ACLs. NMFS believes the guidelines are clear that catch monitoring data is very important to consider when Councils establish their AMs. Councils are already directed to: minimize adverse economic impacts under National Standard 8; minimize bycatch and bycatch mortality under National Standard 9; and promote safety of human life at sea under National Standard 10. *See* MSA 301(a)(8), (9), and (10) (setting forth specific requirements of the national standards).

Comment 76: NMFS received comments expressing concern about establishing ACL and AM mechanisms in FMPs. One commenter expressed concern that if ACL and AM mechanisms were located in the FMP, it would require a multi-year process to change any measure. They instead suggested that Councils should have the ability to framework the mechanisms and establish an annual or multi-year process for making adjustments. Another commenter suggested that Councils should be required to modify their SOPPs to incorporate a mechanism for specifying ACLs and reviewing AMs annually through regular catch specification procedures. NMFS received another comment that disagreed with the idea that the Council's SOPPs are the proper place to describe the process for establishing ABC Control Rules, including the role of SouthEast Data Assessment and Review (SEDAR) and the SSC. This commenter recommended instead that ABC Control Rules be included in Fishery Management Plans and have the ability to refine management through framework actions.

Response: The FMP needs to contain the ACL mechanisms and AMs, as they are part of the conservation and management measures for the fishery. The ACL mechanisms and AMs can contain framework provisions and utilize specification processes as appropriate. NMFS does not agree that the ACL and AM mechanisms should be established in the SOPPs. Also, NMFS never intended that ABC control rules would be described in the SOPPs and agrees that the ABC control rules should be described in the Fishery Management Plans. However, it is important to understand how the Councils, SSC, and peer review process work together to implement the provisions of the MSA, and that can be explained in the SOPPs, FMP, or some other document.

Comment 77: NMFS received several comments supporting the exception to the ACL rule for stocks with a life cycle of approximately one year. Commenters asked for a list of species which fit the exception, specific guidance on how to set ACLs for these stocks if they become overfished, and expansion of the exception to species with a two year life cycle.

Response: Due to their unique life history, the process for setting ACLs does not fit well for stocks which have a life cycle of approximately one year. The exception for species with an annual life cycle allows flexibility for Councils to use other management measures for these stocks which are more appropriate for the unique life history for each stock and the specifics of the fishery which captures them. NMFS believes that the final guidance should not include a list of stocks which meets these criteria; this is a decision that is best made by the regional Councils. Even though ACLs are not required for these stocks, Councils are still required to estimate other biological reference points such as SDC, MSY, OY, ABC and an ABC control rule. However, the MSA limits the exception and clearly states that if overfishing is occurring on the stock, the exception can not be used, therefore ACLs would be required. MSA only provided for a 1-year life cycle exception, thus NMFS cannot expand the exception to two years. Section (h)(3) of the final action acknowledges that there may be circumstances when flexibility is needed in applying the NS1 guidelines. Whether such flexibility is appropriate for certain two year life cycle species would have to be considered on a case-by-case basis.

Comment 78: NMFS received many comments expressing different interpretations of the MSA's ACL international exception. Some commented that the exception only pertains to the 2010/2011 timing requirement. If fisheries under international agreements were intended to be exempt from ACLs, Congress could have drafted the exception to say that ACLs ''shall not apply'' to such fisheries, similar to language used in the one-year life cycle exception. Several comments stated that by requiring ACLs for U.S. fishermen, the U.S. would be in a better bargaining position in international fora by taking the ''higher ground.'' Others agreed with the exception as set forth in the proposed guidelines but requested clarification. For example, one comment was that the exception should be expanded to cover the US/Canada Resource Sharing Understanding and other arrangements that may not be formal international agreements. Other suggestions included clarifying that the exception applied where a regional fishery management organization had approved a stock assessment, where there were conservation and management measures under an international agreement, or where there were annual catch limits established under international agreement consistent with MSA overfishing and rebuilding requirements.

Response: The ACL international exception is set forth in an uncodified note to MSA section 303. MSRA, Public Law 109–479 section 104(b)(1). The text is vague, and NMFS has spent considerable time looking at different possible interpretations of this text in light of the plain language of the text, public comments, and other relevant MSA provisions. NMFS agrees that one possible interpretation, in light of the text of the one-year life cycle exception (MSRA section 104(b)(2)), is that stocks under international management are only exempt from timing requirements. However, Congress added significant new requirements under the MSRA regarding international fisheries, thus NMFS has tried to interpret the exception in light of these other statutory provisions.

In many fisheries, the U.S. unilaterally cannot end overfishing or rebuild stocks or make any measurable progress towards those goals, even if it were to stop all U.S. harvest. Thus, it has signed onto various treaties and negotiates binding, international conservation and management measures at regional fishery management organizations (RFMOs) to try to facilitate international efforts to end overfishing and rebuild overfished stocks. MSRA acknowledged the challenges facing the United States in international fisheries by, among other things, including a new ''International Overfishing'' section (MSA section 304(i)) that refers domestic regulations to address ''relative impact'' of U.S. vessels; changes to highly migratory species provisions (MSA section 102(b)–(c)); and amendments to the High Seas Driftnet Fishing Moratorium Protection Act, 16 U.S.C. 1826h–1826k, to encourage strengthening of RFMOs and establish a process for identification and certification of nations whose vessels engage in illegal, unreported or unregulated (IUU) fishing and bycatch of protected living marine resources.

While NMFS actively communicates and promotes MSA requirements regarding ending overfishing and rebuilding overfished stocks at the international level (*see*, *e.g.*, MSA section 102(c)), it is unlikely that RFMOs will adopt ACL/AM mechanisms as such mechanisms are understood and required in the context of U.S. domestic fisheries. Given the practical problem of ensuring the U.S. could negotiate such mechanisms, and Congress' clear recognition of U.S. fishing impact versus international fishing effort, NMFS believes that a reasonable interpretation of the exception is that it should apply to the ACL requirement, not just the effective date. If ACLs were required, a likely outcome is that U.S. fishermen may be subject to more restrictive measures than their foreign counterparts, *e.g.*, each country may be assigned a catch quota but the U.S. portion may be subject to further restriction below the assigned amount. Further, requiring ACLs may raise potential conflicts with implementing legislation for some of the international fishery agreements.

NMFS believes that the intent of MSRA is to not unfairly penalize U.S. fishermen for overfishing which is occurring predominantly at the international level. In many cases, applying ACL requirements to U.S. fishermen on just the U.S. portion of the catch or quota, while other nations fished without such additional measures, would not lead to ending overfishing and could disadvantage U.S. fishermen. The guidance given for the international exception allows the Councils to continue managing the U.S. portion of stocks under international agreements, while the U.S. delegation works with RFMOs to end overfishing through international cooperation. The guidelines do not preclude Councils or NMFS from applying ACLs or other catch limits to stocks under international agreements, if such action was deemed to be appropriate and consistent with MSA and other statutory mandates.

NMFS considered different suggestions on how the exception might be clarified, *e.g.*, exception would only apply where there is an approved stock assessment, conservation and management measures, annual catch limits consistent with MSA overfishing and rebuilding requirements, etc. Regardless of how the exception could be revised, establishing ACL mechanisms and AMs on just the U.S. portion of the fishery is unlikely to have any impact on ending overfishing and rebuilding. For these reasons, and taking into consideration possible statutory interpretations and public comment, NMFS has decided not to revise the international exception.

With regard to whether an arrangement or understanding is an ''international agreement,'' it will be important to consider the facts and see if the arrangement or understanding qualifies as an ''international agreement'' as understood under MSA section 3(24) (defining ''international fishery agreement'') and as generally understood in international negotiation. The Case-Zablocki Act, 1 U.S.C. 112b, and its implementing regulations provide helpful guidance on interpreting the term ''international agreement.''

Comment 79: With regard to fisheries data (§ 600.310(i) of NS1 guidelines), comments included: data collection guidelines are burdensome, clarification is needed on how the Councils would implement the data collection requirements, and that data collection performance standards and real-time accounting are needed.

Response: NMFS believes that § 600.310(i) of the final action provides sufficient guidance to the Councils in developing and updating their FMPs, or associated public documents such as SAFE reports, to address data needed to meet the new requirements of the MSRA. There is a close relationship between the data available for fishery management and the types of conservation and management measures that can be employed. Also, for effective prevention of overfishing, it is essential that all sources of fishing mortality be accounted for. NMFS believes that detailing the sources of data for the fishery and how they are used to account for all sources of fishing mortality in the annual catch limit system will be beneficial. NMFS revised the final guidelines to clarify that a SAFE report, or other public document adopted by a Council, can be used to document the required fishery data elements.

Comment 80: NMFS received several comments requesting that better data be used when creating conservation and management measures.

Response: NMFS agrees that improvements in fishery data can lead to more effective conservation and management measures, including ACLs. NMFS is aware of the various gaps in data collection and analysis for FMPs in U.S. fisheries, and has ongoing and future plans to improve the data needed to implement the new provisions of the MSRA. NMFS programs and initiatives that will help produce better quality data include the: Marine Recreational Information Program (MRIP), National Permits System, and Fisheries Information and National Saltwater Angler Registry.

Comment 81: Some comments recognized the ongoing programs to improve data, but were concerned that the time that it would take to implement and fold these new data into the management process could cause overly restrictive measures when implementing ACLs on fisheries that are data poor (*e.g.* recreational fisheries).

Response: ACLs must be implemented using the best data and information available. Future improvements in data will allow corresponding improvements in conservation and management measures. This is an incremental process. NMFS believes that Councils must implement the best ACLs possible with the existing data, but should also look for opportunities to improve the data and the ACL measures in the future. It is important that the ACL measures prevent overfishing without being overly restrictive. In data poor situations, it is important to monitor key indicators, and have accountability measures that quickly adjust the fishery in response to changes in those indicators.

Comment 82: Some commenters noted they want more transparency in the data being used to manage fisheries.

Response: NMFS believes the NS1 guidelines provide sufficient guidance to the Councils in developing and updating their FMPs, or associated public documents such as SAFE reports, to address data needed to meet the new requirements of the MSRA. NMFS agrees that transparency in the Council process and NMFS decision process in regard to data and data analysis is critical to the public and user groups understanding of how fisheries are managed. NMFS is aware of this issue and will continue to seek improvements in such processes.

Comment 83: NMFS received several comments about the timing associated with submitting a rebuilding plan. Commenters asked for clarification on when the clock started for the implementation of the plan, stated that Councils should have two years to submit the plan to the Secretary, and suggested that a 6-month review/implementation period be used instead of a 9-month period. Commenters noted that MSA provides for specific time periods for Secretarial review.

Response: Ending overfishing and rebuilding overfished stocks is an important goal of the MSA and the performance of NMFS is measured by its ability to reach this goal. Currently, the Council has 12 months to submit an FMP, FMP amendment, or proposed

regulations to the Secretary, but there is no time requirement for implementation of such actions. MSA section 304(e)(3), which is effective July 12, 2009, requires that a Council prepare and implement an FMP, FMP amendment, or proposed regulations within 2 years of the Secretary notifying the council that the stock is overfished or approaching a condition of being overfished. The guidelines provide that such actions should be submitted to the Secretary within 15 months so NMFS has 9 months to review and implement the plan and regulations. NMFS recognizes that there are timing requirements for Secretarial review of FMPs and regulations (MSA section 304(a),(b)). The 15-month period was not intended to expand the time for Secretarial review, but rather, to address the new requirement that actions be implemented within two years. NMFS believes the timing set forth in the guidelines is appropriate as a general rule: it would continue to allow for 60 days for public comment on an FMP, 30 days for Secretarial review, and 6 months for NMFS to implement the rebuilding plan. However, in specific cases NMFS and a Council may agree on a schedule that gives the Council more time, if the overall objective can still be met.

Comment 84: NMFS received many comments in support of the language regarding ending overfishing immediately. One comment, however, stated that intent of the MSA is to end all overfishing, not just chronic overfishing, as described in the preamble.

Response: NMFS agrees that the intent of the MSA is to end overfishing, and in the context of a rebuilding plan, overfishing must be ended immediately. However, as long as fishing is occurring, there always is a chance that overfishing may occur given scientific and management uncertainty. The guidelines explain how to incorporate scientific and management uncertainty so that fishing may continue but with an appropriately low likelihood of overfishing. The term ''chronic overfishing'' is used to mean that annual fishing mortality rates exceed the MFMT on a consistent basis over a period of years. The MSA definition of overfishing is ''* * * a rate or level of fishing mortality that jeopardizes the capacity of a fishery to produce the maximum sustainable yield on a continuing basis.'' NMFS believes that the best way to ensure that overfishing does not occur is to keep annual fishing mortality rates below the MFMT. However, exceeding the MFMT occasionally does not necessarily jeopardize the capacity of a fishery to produce the MSY on a continuing basis. The more frequently MFMT is exceeded, the more likely it becomes that the capacity of a fishery to produce the MSY on a continuing basis is jeopardized. Thus, NMFS believes that ACLs and AMs should be designed to prevent overfishing on an annual basis, but that conservation and management measures need not be so conservative as to prevent any possibility that the fishing mortality rate exceeds the MFMT in every year.

Comment 85: NMFS received several comments regarding what happens when a rebuilding plan reaches T_{max} but the stock is not fully rebuilt. Commenters supported the approach in the proposed action that provided that the rebuilding F should be reduced to no more than 75 percent of MFMT until the stock or stock complex is rebuilt. One commenter suggested clarifying the final guidelines text to provide: ''If the stock or stock complex has not rebuilt by T_{max}, then the fishing mortality rate should be maintained at $F_{rebuild}$ or 75% of the MFMT, whichever is less.'' Other commenters stated that 75 percent MFMT is not precautionary enough and that 50 percent MFMT (or less) should be used.

Response: This new language in the guidelines fills a gap in the current guidelines which did not prescribe how to proceed when a stock had reached T_{max} but had not been fully rebuilt. NMFS believes that requiring that F does not exceed $F_{rebuild}$ or 75 percent MFMT, whichever is lower, is an appropriate limit, but Councils should consider a lower mortality rate to meet the requirement to rebuild stocks in as short a time as possible, pursuant to the provisions in MSA section 304(e)(4)(a)(i). NMFS agrees that the suggested edit would clarify the provision, and has revised the guidelines.

Comment 86: NMFS received many comments on the relationship between T_{min}, T_{target} and T_{max}. Some comments supported the proposed guidelines and others stated that the guidelines should be modified. Comments included: T_{min} is inconsistent with MSA's requirement to take into account needs of fishing communities and should include those needs when evaluating whether rebuilding can occur in 10 years or less; management measures should be designed to achieve rebuilding by the T_{target} with at least a 50% probability of success and achieve T_{max} with a 90% probability of success; as in the 2005 proposed NS1 guidelines revisions, T_{max} should be calculated as T_{min} plus one mean generation time for purposes of determining whether rebuilding can occur in 10 years or less; per *NRDC* v. *NMFS,* 421 F.3d 872 (9th Cir. 2005), T_{target} should be as close to T_{min} as possible without causing a short-term disaster; rebuilding timeframes should only be extended above T_{min} where ''unusually severe impacts on fishing communities can be demonstrated, and where biological and ecological implications are minimal;'' rebuilding times for stock complexes must not be used to delay recovery of complex member species; and the ''generation time'' calculation for T_{max} should refer to generation time of the current population.

Response: In developing the guidance for rebuilding plans, NMFS developed guidelines for Councils which, if followed, are strong enough to rebuild overfished stocks, yet flexible enough to work for a diverse range of fisheries. The timeline for a rebuilding plan is based on three time points, T_{min}, T_{target} and T_{max}. T_{min} is the amount of time, in the absence of any fishing mortality, for the stock to have a 50% probability of reaching the rebuilding goal, B_{msy}. T_{min} is the basis for determining the rebuilding period, consistent with section 304(e)(4)(A)(ii) of the MSA which requires that rebuilding periods not exceed 10 years, except in cases where the biology of the stock of fish, other environmental conditions, or management measures under an international agreement in which the United States participates dictate otherwise. T_{min} provides a biologically determined lower limit to T_{target}. Needs of fishing communities are not part of the criteria for determining whether a rebuilding period can or cannot exceed 10 years, but are an important factor in establishing T_{target}.

Just as T_{min} is a helpful reference point of the absolute shortest time to rebuild, T_{max} provides a reference point of the absolute longest rebuilding period that could be consistent with the MSA. T_{max} is clearly described in the guidelines as either 10 years, if T_{min} is 10 years or less, or T_{min} plus one generation time for the stock if T_{min} is greater than 10 years. NMFS agrees that this calculation can cause a discontinuity problem when calculating T_{max}, and proposed revisions to the NS1 guidelines in 2005 that would have addressed the issue by basing T_{max} on T_{min} + one generation time in all cases, which would have removed the requirement that T_{max} is 10 years in all cases where T_{min} was less than 10 years. NMFS did not finalize those revisions, but proposed the same changes to the MSA in the Administration's proposed MSA reauthorization bill. However,

when MSRA was passed, Congress did not accept the Administration's proposal and chose to keep the existing provision. NMFS has, therefore, not revised this aspect of the NS1 guidelines.

The generation time is defined in the guidelines as ''the average length of time between when an individual is born and the birth of its offspring.'' Typically this is calculated as the mean age of the spawners in the absence of fishing mortality (per Restrepo *et al.,* 1998), but the exact method is not specified in the guidance.

T_{max} is a limit which should be avoided. When developing a rebuilding plan, it is good practice for Councils to calculate the probability of the potential management alternatives to achieve rebuilding by T_{max}, in order to inform their decision.

T_{target} is bounded by T_{min} and T_{max} and is supposed to be established based on the factors specified in MSA section 304(e)(4). Section 600.310(j)(3) of the final action reiterates the statutory criteria on specifying rebuilding periods that are ''as short as possible,'' taking into account specified factors. Management measures put in place by the rebuilding plan should be expected (at least 50% probability) to achieve rebuilding by T_{target}. NMFS does not believe these sections should be revised to focus on ''short-term disasters'' or ''unusually severe'' community impacts, as the MSA provides for several factors to be considered. NMFS believes the final guidelines provide sufficient general guidance on the MSA requirements, but acknowledges that there is case law in different jurisdictions (such as NRDC v. NMFS), that fishery managers should consider in addition to the general guidance.

Comment 87: A commenter stated that § 600.310(j)(3)(i)(E) of the proposed action should be revised to state that ''as short as possible'' is a mandate, not just a priority.

Response: NMFS deleted the ''priority'' text in § 600.310 (j)(3)(i)(E) of the final action. That text is unnecessary given that § 600.310 (j)(3)(i) of the guidelines explains ''as short as possible'' and other rebuilding time period requirements from MSA section 304(e)(4).

Comment 88: Commenters raised several questions about the relationship of NS1 and National Standard 8 (NS 8), including whether NS 1 ''trumps'' NS 8 and whether the ACL guidance provides sufficient flexibility to address NS 8 considerations.

Response: NS 1 states: ''Conservation and management measures shall prevent overfishing while achieving, on a continuing basis, the optimum yield from each fishery for the United States fishing industry.'' MSA section 301(a)(1). NS 8 states: ''Conservation and management measures shall, *consistent with the conservation requirements of this Act (including the prevention of overfishing and rebuilding of overfished stocks,* take into account the importance of fishery resources to fishing communities by utilizing economic and social data that meet the requirements of paragraph (2) [*i.e.*, National Standard 2] , in order to (A) provide for sustained participation of such communities, and (B) to the extent practicable, minimize adverse economic impacts on such communities.'' MSA section 301(a)(8) (*emphasis added*).

The objectives in NS8 for sustained participation of fishing communities and minimization of adverse economic impacts do not provide a basis for continuing overfishing or failing to rebuild stocks. The text of NS8 explicitly provides that conservation and management measures must prevent overfishing and rebuild overfished stocks. MSA does provide, however, for flexibility in the specific conservation and management measures used to achieve its conservation goals, and NMFS took this into consideration in developing the revised NS1 guidelines.

Comment 89: NMFS received many comments regarding § 600.310(m) of the proposed action, a provision commonly called the ''mixed stock exception.'' One comment supported the revision as proposed. Some commenters noted that the provision is very important in managing specific mixed stock fisheries, and that changes in the proposed guidelines would make it impossible to use. Specific concern was noted about text that stated that the ''resulting rate of fishing mortality will not cause any stock or stock complex to fall below its MSST more than 50 percent of the time in the long term.'' In addition, commenters stated that the proposed revisions do not allow for social and economic aspects to be taken in to account adequately and would negatively impact several fisheries and fishing communities. Many others commented that the provision should be removed entirely, because it is contrary to the intent of the MSA. The MSA, as amended by the MSRA, requires preventing and ending overfishing, and a mixed stock exception would allow for chronic overfishing on vulnerable fish stocks within a complex.

Response: MSRA amended overfishing and rebuilding provisions of the MSA, reflecting the priority to be given to the Act's conservation goals. NMFS believes that the final NS1 guidelines provide helpful guidance on the new statutory requirements and will strengthen efforts to prevent overfishing from occurring in fisheries. Preventing overfishing and achieving, on a continuing basis, the OY is particularly challenging in mixed stock fisheries. To address this issue, the proposed action retained a mixed stock exception. NMFS recognizes the concerns raised about how the exception will impact efforts to prevent and end overfishing, and thus, revised the current NS1 guidelines text in light of new MSRA provisions.

The current mixed stock exception allows overfishing to occur on stocks within a complex so long as they do not become listed under the Endangered Species Act (ESA). As explained in the proposed guidelines, NMFS believes that ESA listing is an inappropriate threshold, and that stocks should be managed so they retain their potential to achieve MSY. The revised guidelines propose a higher threshold, limiting F to a level that will not lead to the stock becoming overfished in the long term. In addition, if any stock, including those under the mixed stock exception, were to drop below its MSST, it would be subject to the rebuilding requirements of the MSA, which require that overfishing be ended immediately and that the stock be rebuilt to B_{msy} (see § 600.310(j)(2)(ii)(B) of the final action). The exception, as revised, addresses concerns regarding social, economic, and community impacts as it could allow for continued harvest of certain stocks within a mixed stock fishery.

Having considered public comments on the proposed guidelines, NMFS has decided to retain the mixed stock exception as proposed in the guidance. While NMFS has chosen in the NS1 guidelines to emphasize the importance of stock-level analyses, MSA refers to preventing overfishing in a fishery and provides for flexibility in terms of the specific mechanisms and measures used to achieve this goal. The mixed stock exception provides Councils with needed flexibility for managing fisheries, while ensuring that all stocks in the fishery continue to be subject to strong conservation and management. However, NMFS believes that the mixed stock exception should be applied with a great deal of caution, taking into consideration new MSRA requirements and NS1 guidance regarding stock complexes and indicator species. NMFS also believes that Councils should work to improve selectivity of fishing gear and practices in their mixed-stock fisheries so that the need to apply the mixed stock exception is reduced in the future.

VI. Changes From Proposed Action

Annual catch target (ACT) is described as a management option, rather than a required reference point in paragraphs (f)(1), (f)(2)(v), (f)(6), (f)(6)(i), and (g)(2) in the final action.

The following sentence was deleted from paragraph (b)(2)(v)(B): ''The SSC may specify the type of information that should be included in the Stock Assessment and Fishery Evaluation (SAFE) report (*see* § 600.315).'' Paragraph (b)(2)(v)(C) was revised to make some clarifying edits regarding the SSC and peer review process. The following sentence was included in (b)(2)(v)(D): ''The SSC recommendation that is the most relevant to ACLs is ABC, as both ACL and ABC are levels of annual catch.''

Paragraph (c)(5) is removed because ''ACT control rule'' is no longer a required part of the definition framework. Paragraph (c)(6) in the proposed action is re-designated as paragraph (c)(5) in the final action. Paragraph (c)(7) in the proposed action is re-designated as paragraph (c)(6) in the final action.

Paragraph (d)(1) was revised to clarify that Councils may, but are not required to, use the ''ecosystem component'' species classification. Paragraphs (d)(2) through (d)(7) were revised to better clarify the classification system for stocks in an FMP. Paragraph (d)(9) is revised to emphasize that indicator stocks are stocks with SDC that can be used to help manage more poorly known stocks that are in a stock complex. Paragraph (d)(10) has been added to describe in general how to evaluate ''vulnerability'' of a stock.

Paragraph (e)(1)(iv) was revised to clarify that ecological conditions should be taken into account when specifying MSY. The following sentence was added to paragraph (e)(2)(i)(C): ''The MFMT or reasonable proxy may be expressed either as a single number (a fishing mortality rate or F value), or as a function of spawning biomass or other measure of reproductive potential.'' The following sentence was added to paragraph (e)(2)(i)(D): ''The OFL is an estimate of the catch level above which overfishing is occurring.'' The following sentence was deleted from (e)(2)(ii)(A)(*1*): ''The MFMT must not exceed F_{msy}.'' Paragraph (e)(3)(iv) was revised to improve clarity. The following sentence was deleted from (e)(3)(v)(A): ''As a long-term average, OY cannot exceed MSY.''

Paragraph (f)(1) was revised to give examples of scientific and management uncertainty. Paragraphs (f)(2)(ii) and (iii) were revised to clarify that scientific uncertainty in the OFL and any other scientific uncertainty should be accounted for when specifying ABC and the ABC control rule. Paragraph (f)(3) was revised to improve clarity; to acknowledge that the SSC may recommend an ABC that differs from the result of the ABC control rule calculation; and to state that while the ABC is allowed to equal OFL, NMFS expects that in most cases ABC will be reduced from OFL to reduce the probability that overfishing might occur in a year. Paragraph (f)(4) on the ABC control rule was revised to include the following sentences: ''The determination of ABC should be based, when possible, on the probability that an actual catch equal to the stock's ABC would result in overfishing. This probability that overfishing will occur cannot exceed 50 percent and should be a lower value. The ABC control rule should consider reducing fishing mortality as stock size declines and may establish a stock abundance level below which fishing would not be allowed.'' Paragraph (f)(5)(i) was revised to include the following sentences: ''ACLs in coordination with AMs must prevent overfishing (see MSA section 303(a)(15)). If a Council recommends an ACL which equals ABC, and the ABC is equal to OFL, the Secretary may presume that the proposal would not prevent overfishing, in the absence of sufficient analysis and justification for the approach.'' Also, paragraph (f)(5)(i) was revised to clarify that ''a multiyear plan must provide that, if an ACL is exceeded for a year, then AMs are triggered for the next year consistent with paragraph (g)(3) of this section.'' Paragraph (f)(5)(ii) now clarifies that ''if the management measures for different sectors differ in degree of management uncertainty, then sector-ACLs may be necessary so appropriate AMs can be developed for each sector.'' Paragraphs (f)(5)(iii) and (g)(5) were revised to remove the phrase ''large majority'' from both provisions. The description of the relationship between OFL to MSY and ACT to OY was removed from paragraph (f)(7) and is replaced with the following sentence: ''A Council may choose to use a single control rule that combines both scientific and management uncertainty and supports the ABC recommendation and establishment of ACL and if used ACT.''

Paragraph (g)(2) on inseason AMs was revised to include the following sentences: ''FMPs should contain inseason closure authority giving NMFS the ability to close fisheries if it determines, based on data that it deems sufficiently reliable, that an ACL has been exceeded or is projected to be reached, and that closure of the fishery is necessary to prevent overfishing. For fisheries without inseason management control to prevent the ACL from being exceeded, AMs should utilize ACTs that are set below ACLs so that catches do not exceed the ACL.'' Paragraph (g)(3) was revised to improve clarity and to include the following sentence: ''A Council could choose a higher performance standard (e.g., a stock's catch should not exceed its ACL more often than once every five or six years) for a stock that is particularly vulnerable to the effects of overfishing, if the vulnerability of the stock has not already been accounted for in the ABC control rule.'' Paragraph (g)(4) on AMs based on multi-year average data was revised to clarify: That Councils should explain why basing AMs on a multi-year period is appropriate; that AMs should be implemented if the average catch exceeds the average ACL; the performance standard; and that Councils can use a stepped approach when initially implementing AMs based on multi-year average data.

Paragraph (h) was revised to include the sentence: ''These mechanisms should describe the annual or multiyear process by which specific ACLs, AMs, and other reference points such as OFL, and ABC will be established.'' Paragraph (h)(1)(v) was removed because the requirement to describe fisheries data is covered under paragraph (i). Paragraph (i) is revised to clarify that Councils must describe ''in their FMPs, or associated public documents such as SAFE reports as appropriate,'' general data collection methods.

Paragraph (j)(2)(ii)(C) was removed and paragraph (j)(2)(ii)(B) was revised to include information about stocks or stock complexes that are approaching an overfished condition. Paragraph (j)(3)(i)(E) was revised to remove the ''priority'' text. That text is unnecessary given that section (j)(3)(i) explains ''as short as possible'' and other rebuilding time period requirements from MSA section 304(e)(4). Paragraph (j)(3)(ii) was revised to clarify that ''if the stock or stock complex has not rebuilt by T_{max}, then the fishing mortality rate should be maintained at $F_{rebuild}$ or 75 percent of the MFMT, whichever is less.''

Introductory language (General) has been added to paragraph (l) to clarify the relationship of other national standards to National Standard 1. Also, paragraph (l)(4) has been revised to ensure that the description about the relationship between National Standard 8 with National Standard 1 reflects more

accurately, section 301(a)(8) of the Magnuson-Stevens Act.

The words ''should'' or ''recommended'' in the proposed rule are changed to ''must'' or ''are required'' or ''need to'' in this action's codified text if NMFS interprets the guidance to refer to ''requirements of the Magnuson-Stevens Act'' and ''the logical extension thereof'' (see section 600.305(c) of the MSA). In the following, items in paragraphs of § 600.310 are followed by an applicable MSA section that contains pertinent requirements:

Paragraph (b)(3) is revised to state that Councils ''must take an approach that considers uncertainty in scientific information and management control of the fishery'' because it needs to meet requirements in MSA section 303(a)(15).

Paragraph (c) is revised to state ''* * * Councils must include in their FMPs * * *'' because it needs to meet various requirements in MSA section 303(a).

Paragraph (c) is revised to state ''Councils must also describe fisheries data * * *'' because it needs to meet requirements of various portions of MSA sections 303(a) and 303(a)(15).

Paragraph (c) is revised to state ''* * * Councils must evaluate and describe the following items in their FMPs * * *'' because it needs to meet requirements of various portions of MSA sections 303(a) and 303(a)(15).

Paragraph (e)(1) is revised to state that ''Each FMP must include an estimate of MSY * * *'' because it needs to meet requirements of MSA section 303(a)(3).

Paragraph (e)(2)(ii) is revised to state that a Council ''must provide an analysis of how the SDC were chosen * * *'' because it needs to meet requirements of MSA section 303(a)(10).

Paragraph (e)(2)(ii)(A) is revised to state ''each FMP must describe which of the following two methods * * *'' because it needs to meet requirements of MSA section 303(a)(10).

Paragraph (e)(2)(ii)(B) is revised to state ''the MSST or reasonable proxy must be expressed in terms of spawning biomass * * *'' because it needs to meet requirements of MSA section 303(a)(10).

Paragraph (f)(4) is revised to state each Council ''must establish an ABC control rule * * *'' because it needs to meet requirements of MSA sections 303(a)(15) and 302(g)(1)(B).

Paragraph (f)(4) is revised to state ''The ABC control rule must articulate how ABC will be set compared to the OFL * * *'' because it needs to meet requirements of MSA sections 303(a)(15) and 301(a)(2).

Paragraph (f)(5)(i) is revised to state ''A multiyear plan must include a mechanism for specifying ACLs for each year * * *'' because it needs to meet requirements of MSA section 303(a)(15).

Paragraph (f)(5)(i) is also revised to state ''A multiyear plan must provide that, if an ACL is exceeded * * *'' because it needs to meet requirements of MSA section 303(a)(15).

Paragraph (f)(6)(i) is revised to state ''Such analyses must be based on best available scientific * * *'' because it needs to meet requirements of MSA section 301(a)(2).

Paragraph (g)(3) is revised to state a Council ''must determine as soon as possible after the fishing year if an ACL is exceeded * * *'' because it needs to meet requirements of MSA sections 303(a)(15), 301(a)(1) and 301(a)(2).

Paragraph (h) is revised to state FMPs or FMP amendments ''must establish ACL mechanisms and AMs * * *'' because it needs to meet requirements of MSA section 303(a)(15).

Paragraph (h)(3) is revised to state ''Councils must document their rationale for any alternative approaches * * *'' because it needs to meet requirements of MSA section 303(a)(15).

Paragraph (j)(2) is revised to state ''FMPs or FMP amendments must establish ACL and AM mechanisms in 2010 * * *'' because it needs to meet requirements of MSA section 303(a)(15).

Paragraph (j)(2)(i)(A) is revised to state that '' * * * ACLs and AMs themselves must be specified * * *'' because it needs to meet requirements of MSA section 303(a)(15).

Paragraph (k) is revised to state that ''The Secretary, in cooperation with the Secretary of State, must immediately take appropriate action at the international level * * *'' because it needs to meet requirements of MSA section 304(i)—INTERNATIONAL OVERFISHING.

Paragraph (k)(3) is revised to state that ''Information used to determine relative impact must be based upon the best available scientific * * *'' because it needs to meet requirements of MSA section 301(a)(2).

Paragraph (l)(2) is revised to state that ''Also scientific assessments must be based on the best information * * *'' because it needs to meet requirements of MSA section 301(a)(2).

VII. References Cited

A complete list of all the references cited in this final action is available online at: *http://www.nmfs.noaa.gov/msa2007/catchlimits.htm* or upon request from Mark Millikin [*see* **FOR FURTHER INFORMATION CONTACT**].

VIII. Classification

Pursuant to the Magnuson-Stevens Act, the NMFS Assistant Administrator has determined that these final NS1 guidelines are consistent with the Magnuson-Stevens Act, and other applicable law.

The final NS1 guidelines have been determined to be significant for purposes of Executive Order 12866. NOAA prepared a regulatory impact review of this rulemaking, which is available at: *http://www.nmfs.noaa.gov/msa2007/catchlimits.htm.* This analysis discusses various policy options that NOAA considered in preparation of the proposed action, given NOAA's interpretation of the statutory terms in the MSRA, such as the appropriate meaning of the word ''limit'' in ''Annual Catch Limit,'' and NOAA's belief that it has become necessary for Councils to consider separately the uncertainties in fishery management and the scientific uncertainties in stock evaluation in order to effectively set fishery management policies and ensure fulfillment of the goals to end overfishing and rebuild overfished stocks.

The Chief Counsel for Regulation of the Department of Commerce certified to the Chief Counsel for Advocacy of the Small Business Administration during the proposed rule stage that these revisions to the NS1 guidelines, if adopted, would not have any significant economic impact on a substantial number of small entities. The factual basis for the certification was published in the proposed action and is not repeated here. Two commenters stated that an initial regulatory flexibility analysis should be prepared, and NMFS has responded to those comments in the ''Response to Comments.'' After considering the comments, NMFS has determined that a certification is still appropriate for this action. Therefore, a regulatory flexibility analysis is not required for this action and none was prepared.

List of Subjects in 50 CFR Part 600

Fisheries, Fishing, Reporting and recordkeeping requirements.

Dated: January 9, 2009.

James W. Balsiger,

Acting Assistant Administrator, for Fisheries, National Marine Fisheries Service.

PART 600—MAGNUSON-STEVENS ACT PROVISIONS

■ 1. The authority citation for part 600 continues to read as follows:

Authority: 16 U.S.C. 1801 *et seq.*

■ 2. Section 600.310 is revised to read as follows:

§ 600.310 National Standard 1—Optimum Yield.

(a) *Standard 1.* Conservation and management measures shall prevent overfishing while achieving, on a continuing basis, the optimum yield (OY) from each fishery for the U.S. fishing industry.

(b) *General.* (1) The guidelines set forth in this section describe fishery management approaches to meet the objectives of National Standard 1 (NS1), and include guidance on:

(i) Specifying maximum sustainable yield (MSY) and OY;

(ii) Specifying status determination criteria (SDC) so that overfishing and overfished determinations can be made for stocks and stock complexes that are part of a fishery;

(iii) Preventing overfishing and achieving OY, incorporation of scientific and management uncertainty in control rules, and adaptive management using annual catch limits (ACL) and measures to ensure accountability (AM); and

(iv) Rebuilding stocks and stock complexes.

(2) *Overview of Magnuson-Stevens Act concepts and provisions related to NS1*—(i) *MSY.* The Magnuson-Stevens Act establishes MSY as the basis for fishery management and requires that: The fishing mortality rate does not jeopardize the capacity of a stock or stock complex to produce MSY; the abundance of an overfished stock or stock complex be rebuilt to a level that is capable of producing MSY; and OY not exceed MSY.

(ii) *OY.* The determination of OY is a decisional mechanism for resolving the Magnuson-Stevens Act's conservation and management objectives, achieving a fishery management plan's (FMP) objectives, and balancing the various interests that comprise the greatest overall benefits to the Nation. OY is based on MSY as reduced under paragraphs (e)(3)(iii) and (iv) of this section. The most important limitation on the specification of OY is that the choice of OY and the conservation and management measures proposed to achieve it must prevent overfishing.

(iii) *ACLs and AMs.* Any FMP which is prepared by any Council shall establish a mechanism for specifying ACLs in the FMP (including a multiyear plan), implementing regulations, or annual specifications, at a level such that overfishing does not occur in the fishery, including measures to ensure accountability (Magnuson-Stevens Act section 303(a)(15)). Subject to certain exceptions and circumstances described in paragraph (h) of this section, this requirement takes effect in fishing year 2010, for fisheries determined subject to overfishing, and in fishing year 2011, for all other fisheries (Magnuson-Stevens Act section 303 note). ''Council'' includes the Regional Fishery Management Councils and the Secretary of Commerce, as appropriate (*see* § 600.305(c)(11)).

(iv) *Reference points.* SDC, MSY, acceptable biological catch (ABC), and ACL, which are described further in paragraphs (e) and (f) of this section, are collectively referred to as ''reference points.''

(v) *Scientific advice.* The Magnuson-Stevens Act has requirements regarding scientific and statistical committees (SSC) of the Regional Fishery Management Councils, including but not limited to, the following provisions:

(A) Each Regional Fishery Management Council shall establish an SSC as described in section 302(g)(1)(A) of the Magnuson-Stevens Act.

(B) Each SSC shall provide its Regional Fishery Management Council recommendations for ABC as well as other scientific advice, as described in Magnuson-Stevens Act section 302(g)(1)(B).

(C) The Secretary and each Regional Fishery Management Council may establish a peer review process for that Council for scientific information used to advise the Council about the conservation and management of a fishery (see Magnuson-Stevens Act section 302(g)(1)(E)). If a peer review process is established, it should investigate the technical merits of stock assessments and other scientific information used by the SSC or agency or international scientists, as appropriate. For Regional Fishery Management Councils, the peer review process is not a substitute for the SSC and should work in conjunction with the SSC. For the Secretary, which does not have an SSC, the peer review process should provide the scientific information necessary.

(D) Each Council shall develop ACLs for each of its managed fisheries that may not exceed the ''fishing level recommendations'' of its SSC or peer review process (Magnuson-Stevens Act section 302(h)(6)). The SSC recommendation that is the most relevant to ACLs is ABC, as both ACL and ABC are levels of annual catch.

(3) *Approach for setting limits and accountability measures, including targets, for consistency with NS1.* In general, when specifying limits and accountability measures intended to avoid overfishing and achieve sustainable fisheries, Councils must take an approach that considers uncertainty in scientific information and management control of the fishery. These guidelines describe how to address uncertainty such that there is a low risk that limits are exceeded as described in paragraphs (f)(4) and (f)(6) of this section.

(c) *Summary of items to include in FMPs related to NS1.* This section provides a summary of items that Councils must include in their FMPs and FMP amendments in order to address ACL, AM, and other aspects of the NS1 guidelines. As described in further detail in paragraph (d) of this section, Councils may review their FMPs to decide if all stocks are ''in the fishery'' or whether some fit the category of ''ecosystem component species.'' Councils must also describe fisheries data for the stocks, stock complexes, and ecosystem component species in their FMPs, or associated public documents such as Stock Assessment and Fishery Evaluation (SAFE) Reports. For all stocks and stock complexes that are ''in the fishery'' (see paragraph (d)(2) of this section), the Councils must evaluate and describe the following items in their FMPs and amend the FMPs, if necessary, to align their management objectives to end or prevent overfishing:

(1) MSY and SDC (see paragraphs (e)(1) and (2) of this section).

(2) OY at the stock, stock complex, or fishery level and provide the OY specification analysis (see paragraph (e)(3) of this section).

(3) ABC control rule (see paragraph (f)(4) of this section).

(4) Mechanisms for specifying ACLs and possible sector-specific ACLs in relationship to the ABC (see paragraphs (f)(5) and (h) of this section).

(5) AMs (see paragraphs (g) and (h)(1) of this section).

(6) Stocks and stock complexes that have statutory exceptions from ACLs (see paragraph (h)(2) of this section) or which fall under limited circumstances which require different approaches to meet the ACL requirements (see paragraph (h)(3) of this section).

(d) *Classifying stocks in an FMP*—(1) *Introduction.* Magnuson-Stevens Act section 303(a)(2) requires that an FMP contain, among other things, a description of the species of fish involved in the fishery. The relevant Council determines which specific target stocks and/or non-target stocks to include in a fishery. This section provides that a Council may, but is not required to, use an ''ecosystem component (EC)'' species classification. As a default, all stocks in an FMP are

considered to be ''in the fishery,'' unless they are identified as EC species (see § 600.310(d)(5)) through an FMP amendment process.

(2) *Stocks in a fishery.* Stocks in a fishery may be grouped into stock complexes, as appropriate. Requirements for reference points and management measures for these stocks are described throughout these guidelines.

(3) ''Target stocks'' are stocks that fishers seek to catch for sale or personal use, including ''economic discards'' as defined under Magnuson-Stevens Act section 3(9).

(4) ''Non-target species'' and ''non-target stocks'' are fish caught incidentally during the pursuit of target stocks in a fishery, including ''regulatory discards'' as defined under Magnuson-Stevens Act section 3(38). They may or may not be retained for sale or personal use. Non-target species may be included in a fishery and, if so, they should be identified at the stock level. Some non-target species may be identified in an FMP as ecosystem component (EC) species or stocks.

(5) *Ecosystem component (EC) species.* (i) To be considered for possible classification as an EC species, the species should:

(A) Be a non-target species or non-target stock;

(B) Not be determined to be subject to overfishing, approaching overfished, or overfished;

(C) Not be likely to become subject to overfishing or overfished, according to the best available information, in the absence of conservation and management measures; and

(D) Not generally be retained for sale or personal use.

(ii) Occasional retention of the species would not, in and of itself, preclude consideration of the species under the EC classification. In addition to the general factors noted in paragraphs (d)(5)(i)(A)–(D) of this section, it is important to consider whether use of the EC species classification in a given instance is consistent with MSA conservation and management requirements.

(iii) EC species may be identified at the species or stock level, and may be grouped into complexes. EC species may, but are not required to, be included in an FMP or FMP amendment for any of the following reasons: For data collection purposes; for ecosystem considerations related to specification of OY for the associated fishery; as considerations in the development of conservation and management measures for the associated fishery; and/or to address other ecosystem issues. While EC species are not considered to be ''in the fishery,'' a Council should consider measures for the fishery to minimize bycatch and bycatch mortality of EC species consistent with National Standard 9, and to protect their associated role in the ecosystem. EC species do not require specification of reference points but should be monitored to the extent that any new pertinent scientific information becomes available (e.g., catch trends, vulnerability, etc.) to determine changes in their status or their vulnerability to the fishery. If necessary, they should be reclassified as ''in the fishery.''

(6) *Reclassification.* A Council should monitor the catch resulting from a fishery on a regular basis to determine if the stocks and species are appropriately classified in the FMP. If the criteria previously used to classify a stock or species is no longer valid, the Council should reclassify it through an FMP amendment, which documents rationale for the decision.

(7) *Stocks or species identified in more than one FMP.* If a stock is identified in more than one fishery, Councils should choose which FMP will be the primary FMP in which management objectives, SDC, the stock's overall ACL and other reference points for the stock are established. Conservation and management measures in other FMPs in which the stock is identified as part of a fishery should be consistent with the primary FMP's management objectives for the stock.

(8) *Stock complex.* ''Stock complex'' means a group of stocks that are sufficiently similar in geographic distribution, life history, and vulnerabilities to the fishery such that the impact of management actions on the stocks is similar. At the time a stock complex is established, the FMP should provide a full and explicit description of the proportional composition of each stock in the stock complex, to the extent possible. Stocks may be grouped into complexes for various reasons, including where stocks in a multispecies fishery cannot be targeted independent of one another and MSY can not be defined on a stock-by-stock basis (*see* paragraph (e)(1)(iii) of this section); where there is insufficient data to measure their status relative to SDC; or when it is not feasible for fishermen to distinguish individual stocks among their catch. The vulnerability of stocks to the fishery should be evaluated when determining if a particular stock complex should be established or reorganized, or if a particular stock should be included in a complex. Stock complexes may be comprised of: one or more indicator stocks, each of which has SDC and ACLs, and several other stocks; several stocks without an indicator stock, with SDC and an ACL for the complex as a whole; or one of more indicator stocks, each of which has SDC and management objectives, with an ACL for the complex as a whole (this situation might be applicable to some salmon species).

(9) *Indicator stocks.* An indicator stock is a stock with measurable SDC that can be used to help manage and evaluate more poorly known stocks that are in a stock complex. If an indicator stock is used to evaluate the status of a complex, it should be representative of the typical status of each stock within the complex, due to similarity in vulnerability. If the stocks within a stock complex have a wide range of vulnerability, they should be reorganized into different stock complexes that have similar vulnerabilities; otherwise the indicator stock should be chosen to represent the more vulnerable stocks within the complex. In instances where an indicator stock is less vulnerable than other members of the complex, management measures need to be more conservative so that the more vulnerable members of the complex are not at risk from the fishery. More than one indicator stock can be selected to provide more information about the status of the complex. When indicator stock(s) are used, periodic re-evaluation of available quantitative or qualitative information (e.g., catch trends, changes in vulnerability, fish health indices, etc.) is needed to determine whether a stock is subject to overfishing, or is approaching (or in) an overfished condition.

(10) *Vulnerability.* A stock's vulnerability is a combination of its productivity, which depends upon its life history characteristics, and its susceptibility to the fishery. Productivity refers to the capacity of the stock to produce MSY and to recover if the population is depleted, and susceptibility is the potential for the stock to be impacted by the fishery, which includes direct captures, as well as indirect impacts to the fishery (e.g., loss of habitat quality). Councils in consultation with their SSC, should analyze the vulnerability of stocks in stock complexes where possible.

(e) *Features of MSY, SDC, and OY.*—(1) *MSY.* Each FMP must include an estimate of MSY for the stocks and stock complexes in the fishery, as described in paragraph (d)(2) of this section).

(i) *Definitions.* (A) *MSY* is the largest long-term average catch or yield that can be taken from a stock or stock complex

under prevailing ecological, environmental conditions and fishery technological characteristics (e.g., gear selectivity), and the distribution of catch among fleets.

(B) *MSY fishing mortality rate (F_{msy})* is the fishing mortality rate that, if applied over the long term, would result in MSY.

(C) *MSY stock size (B_{msy})* means the long-term average size of the stock or stock complex, measured in terms of spawning biomass or other appropriate measure of the stock's reproductive potential that would be achieved by fishing at F_{msy}.

(ii) *MSY for stocks.* MSY should be estimated for each stock based on the best scientific information available (see § 600.315).

(iii) *MSY for stock complexes.* MSY should be estimated on a stock-by-stock basis whenever possible. However, where MSY cannot be estimated for each stock in a stock complex, then MSY may be estimated for one or more indicator stocks for the complex or for the complex as a whole. When indicator stocks are used, the stock complex's MSY could be listed as ''unknown,'' while noting that the complex is managed on the basis of one or more indicator stocks that do have known stock-specific MSYs, or suitable proxies, as described in paragraph (e)(1)(iv) of this section. When indicator stocks are not used, MSY, or a suitable proxy, should be calculated for the stock complex as a whole.

(iv) *Specifying MSY.* Because MSY is a long-term average, it need not be estimated annually, but it must be based on the best scientific information available (*see* § 600.315), and should be re-estimated as required by changes in long-term environmental or ecological conditions, fishery technological characteristics, or new scientific information. When data are insufficient to estimate MSY directly, Councils should adopt other measures of reproductive potential, based on the best scientific information available, that can serve as reasonable proxies for MSY, F_{msy}, and B_{msy}, to the extent possible. The MSY for a stock is influenced by its interactions with other stocks in its ecosystem and these interactions may shift as multiple stocks in an ecosystem are fished. These ecological conditions should be taken into account, to the extent possible, when specifying MSY. Ecological conditions not directly accounted for in the specification of MSY can be among the ecological factors considered when setting OY below MSY. As MSY values are estimates or are based on proxies, they will have some level of uncertainty associated with them. The degree of uncertainty in the estimates should be identified, when possible, through the stock assessment process and peer review (*see* § 600.335), and should be taken into account when specifying the ABC Control rule. Where this uncertainty cannot be directly calculated, such as when proxies are used, then a proxy for the uncertainty itself should be established based on the best scientific information, including comparison to other stocks.

(2) *Status determination criteria*—(i) *Definitions.* (A) *Status determination criteria (SDC)* mean the quantifiable factors, MFMT, OFL, and MSST, or their proxies, that are used to determine if overfishing has occurred, or if the stock or stock complex is overfished. Magnuson-Stevens Act (section 3(34)) defines both ''overfishing'' and ''overfished'' to mean a rate or level of fishing mortality that jeopardizes the capacity of a fishery to produce the MSY on a continuing basis. To avoid confusion, this section clarifies that ''overfished'' relates to biomass of a stock or stock complex, and ''overfishing'' pertains to a rate or level of removal of fish from a stock or stock complex.

(B) *Overfishing* (to overfish) occurs whenever a stock or stock complex is subjected to a level of fishing mortality or annual total catch that jeopardizes the capacity of a stock or stock complex to produce MSY on a continuing basis.

(C) *Maximum fishing mortality threshold (MFMT)* means the level of fishing mortality (F), on an annual basis, above which overfishing is occurring. The MFMT or reasonable proxy may be expressed either as a single number (a fishing mortality rate or F value), or as a function of spawning biomass or other measure of reproductive potential.

(D) *Overfishing limit (OFL)* means the annual amount of catch that corresponds to the estimate of MFMT applied to a stock or stock complex's abundance and is expressed in terms of numbers or weight of fish. The OFL is an estimate of the catch level above which overfishing is occurring.

(E) *Overfished.* A stock or stock complex is considered ''overfished'' when its biomass has declined below a level that jeopardizes the capacity of the stock or stock complex to produce MSY on a continuing basis.

(F) *Minimum stock size threshold (MSST)* means the level of biomass below which the stock or stock complex is considered to be overfished.

(G) *Approaching an overfished condition.* A stock or stock complex is approaching an overfished condition when it is projected that there is more than a 50 percent chance that the biomass of the stock or stock complex will decline below the MSST within two years.

(ii) *Specification of SDC and overfishing and overfished determinations.* SDC must be expressed in a way that enables the Council to monitor each stock or stock complex in the FMP, and determine annually, if possible, whether overfishing is occurring and whether the stock or stock complex is overfished. In specifying SDC, a Council must provide an analysis of how the SDC were chosen and how they relate to reproductive potential. Each FMP must specify, to the extent possible, objective and measurable SDC as follows (*see* paragraphs (e)(2)(ii)(A) and (B) of this section):

(A) *SDC to determine overfishing status.* Each FMP must describe which of the following two methods will be used for each stock or stock complex to determine an overfishing status.

(1) *Fishing mortality rate exceeds MFMT.* Exceeding the MFMT for a period of 1 year or more constitutes overfishing. The MFMT or reasonable proxy may be expressed either as a single number (a fishing mortality rate or F value), or as a function of spawning biomass or other measure of reproductive potential.

(2) *Catch exceeds the OFL.* Should the annual catch exceed the annual OFL for 1 year or more, the stock or stock complex is considered subject to overfishing.

(B) *SDC to determine overfished status.* The MSST or reasonable proxy must be expressed in terms of spawning biomass or other measure of reproductive potential. To the extent possible, the MSST should equal whichever of the following is greater: One-half the MSY stock size, or the minimum stock size at which rebuilding to the MSY level would be expected to occur within 10 years, if the stock or stock complex were exploited at the MFMT specified under paragraph (e)(2)(ii)(A)(1) of this section. Should the estimated size of the stock or stock complex in a given year fall below this threshold, the stock or stock complex is considered overfished.

(iii) *Relationship of SDC to environmental change.* Some short-term environmental changes can alter the size of a stock or stock complex without affecting its long-term reproductive potential. Long-term environmental changes affect both the short-term size of the stock or stock complex and the long-term reproductive potential of the stock or stock complex.

(A) If environmental changes cause a stock or stock complex to fall below its MSST without affecting its long-term reproductive potential, fishing mortality must be constrained sufficiently to allow rebuilding within an acceptable time frame (*also see* paragraph (j)(3)(ii) of this section). SDC should not be respecified.

(B) If environmental changes affect the long-term reproductive potential of the stock or stock complex, one or more components of the SDC must be respecified. Once SDC have been respecified, fishing mortality may or may not have to be reduced, depending on the status of the stock or stock complex with respect to the new criteria.

(C) If manmade environmental changes are partially responsible for a stock or stock complex being in an overfished condition, in addition to controlling fishing mortality, Councils should recommend restoration of habitat and other ameliorative programs, to the extent possible (see also the guidelines issued pursuant to section 305(b) of the Magnuson-Stevens Act for Council actions concerning essential fish habitat).

(iv) *Secretarial approval of SDC.* Secretarial approval or disapproval of proposed SDC will be based on consideration of whether the proposal:

(A) Has sufficient scientific merit;

(B) Contains the elements described in paragraph (e)(2)(ii) of this section;

(C) Provides a basis for objective measurement of the status of the stock or stock complex against the criteria; and

(D) is operationally feasible.

(3) *Optimum yield*—(i) *Definitions*—(A) *Optimum yield (OY).* Magnuson-Stevens Act section (3)(33) defines ''optimum,'' with respect to the yield from a fishery, as the amount of fish that will provide the greatest overall benefit to the Nation, particularly with respect to food production and recreational opportunities and taking into account the protection of marine ecosystems; that is prescribed on the basis of the MSY from the fishery, as reduced by any relevant economic, social, or ecological factor; and, in the case of an overfished fishery, that provides for rebuilding to a level consistent with producing the MSY in such fishery. OY may be established at the stock or stock complex level, or at the fishery level.

(B) In NS1, use of the phrase ''achieving, on a continuing basis, the optimum yield from each fishery'' means producing, from each stock, stock complex, or fishery: a long-term series of catches such that the average catch is equal to the OY, overfishing is prevented, the long term average biomass is near or above B_{msy}, and overfished stocks and stock complexes are rebuilt consistent with timing and other requirements of section 304(e)(4) of the Magnuson-Stevens Act and paragraph (j) of this section.

(ii) *General.* OY is a long-term average amount of desired yield from a stock, stock complex, or fishery. An FMP must contain conservation and management measures, including ACLs and AMs, to achieve OY on a continuing basis, and provisions for information collection that are designed to determine the degree to which OY is achieved. These measures should allow for practical and effective implementation and enforcement of the management regime. The Secretary has an obligation to implement and enforce the FMP. If management measures prove unenforceable—or too restrictive, or not rigorous enough to prevent overfishing while achieving OY—they should be modified; an alternative is to reexamine the adequacy of the OY specification. Exceeding OY does not necessarily constitute overfishing. However, even if no overfishing resulted from exceeding OY, continual harvest at a level above OY would violate NS1, because OY was not achieved on a continuing basis. An FMP must contain an assessment and specification of OY, including a summary of information utilized in making such specification, consistent with requirements of section 303(a)(3) of the Magnuson-Stevens Act. A Council must identify those economic, social, and ecological factors relevant to management of a particular stock, stock complex, or fishery, and then evaluate them to determine the OY. The choice of a particular OY must be carefully documented to show that the OY selected will produce the greatest benefit to the Nation and prevent overfishing.

(iii) *Determining the greatest benefit to the Nation.* In determining the greatest benefit to the Nation, the values that should be weighed and receive serious attention when considering the economic, social, or ecological factors used in reducing MSY to obtain OY are:

(A) The benefits of food production are derived from providing seafood to consumers; maintaining an economically viable fishery together with its attendant contributions to the national, regional, and local economies; and utilizing the capacity of the Nation's fishery resources to meet nutritional needs.

(B) The benefits of recreational opportunities reflect the quality of both the recreational fishing experience and non-consumptive fishery uses such as ecotourism, fish watching, and recreational diving. Benefits also include the contribution of recreational fishing to the national, regional, and local economies and food supplies.

(C) The benefits of protection afforded to marine ecosystems are those resulting from maintaining viable populations (including those of unexploited species), maintaining adequate forage for all components of the ecosystem, maintaining evolutionary and ecological processes (e.g., disturbance regimes, hydrological processes, nutrient cycles), maintaining the evolutionary potential of species and ecosystems, and accommodating human use.

(iv) *Factors to consider in OY specification.* Because fisheries have limited capacities, any attempt to maximize the measures of benefits described in paragraph (e)(3)(iii) of this section will inevitably encounter practical constraints. OY cannot exceed MSY in any circumstance, and must take into account the need to prevent overfishing and rebuild overfished stocks and stock complexes. OY is prescribed on the basis of MSY as reduced by social, economic, and ecological factors. To the extent possible, the relevant social, economic, and ecological factors used to establish OY for a stock, stock complex, or fishery should be quantified and reviewed in historical, short-term, and long-term contexts. Even where quantification of social, economic, and ecological factors is not possible, the FMP still must address them in its OY specification. The following is a non-exhaustive list of potential considerations for each factor. An FMP must address each factor but not necessarily each example.

(A) *Social factors.* Examples are enjoyment gained from recreational fishing, avoidance of gear conflicts and resulting disputes, preservation of a way of life for fishermen and their families, and dependence of local communities on a fishery (e.g., involvement in fisheries and ability to adapt to change). Consideration may be given to fishery-related indicators (e.g., number of fishery permits, number of commercial fishing vessels, number of party and charter trips, landings, ex-vessel revenues etc.) and non-fishery related indicators (e.g., unemployment rates, percent of population below the poverty level, population density, etc.). Other factors that may be considered include the effects that past harvest levels have had on fishing communities, the cultural place of subsistence fishing, obligations under Indian treaties, proportions of affected minority and low-income groups, and worldwide nutritional needs.

(B) *Economic factors.* Examples are prudent consideration of the risk of overharvesting when a stock's size or reproductive potential is uncertain (*see* § 600.335(c)(2)(i)), satisfaction of consumer and recreational needs, and encouragement of domestic and export markets for U.S. harvested fish. Other factors that may be considered include: The value of fisheries, the level of capitalization, the decrease in cost per unit of catch afforded by an increase in stock size, the attendant increase in catch per unit of effort, alternate employment opportunities, and economic contribution to fishing communities, coastal areas, affected states, and the nation.

(C) *Ecological factors.* Examples include impacts on ecosystem component species, forage fish stocks, other fisheries, predator-prey or competitive interactions, marine mammals, threatened or endangered species, and birds. Species interactions that have not been explicitly taken into account when calculating MSY should be considered as relevant factors for setting OY below MSY. In addition, consideration should be given to managing forage stocks for higher biomass than B_{msy} to enhance and protect the marine ecosystem. Also important are ecological or environmental conditions that stress marine organisms, such as natural and manmade changes in wetlands or nursery grounds, and effects of pollutants on habitat and stocks.

(v) *Specification of OY.* The specification of OY must be consistent with paragraphs (e)(3)(i)–(iv) of this section. If the estimates of MFMT and current biomass are known with a high level of certainty and management controls can accurately limit catch then OY could be set very close to MSY, assuming no other reductions are necessary for social, economic, or ecological factors. To the degree that such MSY estimates and management controls are lacking or unavailable, OY should be set farther from MSY. If management measures cannot adequately control fishing mortality so that the specified OY can be achieved without overfishing, the Council should reevaluate the management measures and specification of OY so that the dual requirements of NS1 (preventing overfishing while achieving, on a continuing basis, OY) are met.

(A) The amount of fish that constitutes the OY should be expressed in terms of numbers or weight of fish.

(B) Either a range or a single value may be specified for OY.

(C) All catch must be counted against OY, including that resulting from bycatch, scientific research, and all fishing activities.

(D) The OY specification should be translatable into an annual numerical estimate for the purposes of establishing any total allowable level of foreign fishing (TALFF) and analyzing impacts of the management regime.

(E) The determination of OY is based on MSY, directly or through proxy. However, even where sufficient scientific data as to the biological characteristics of the stock do not exist, or where the period of exploitation or investigation has not been long enough for adequate understanding of stock dynamics, or where frequent large-scale fluctuations in stock size diminish the meaningfulness of the MSY concept, OY must still be established based on the best scientific information available.

(F) An OY established at a fishery level may not exceed the sum of the MSY values for each of the stocks or stock complexes within the fishery.

(G) There should be a mechanism in the FMP for periodic reassessment of the OY specification, so that it is responsive to changing circumstances in the fishery.

(H) Part of the OY may be held as a reserve to allow for factors such as uncertainties in estimates of stock size and domestic annual harvest (DAH). If an OY reserve is established, an adequate mechanism should be included in the FMP to permit timely release of the reserve to domestic or foreign fishermen, if necessary.

(vi) *OY and foreign fishing.* Section 201(d) of the Magnuson-Stevens Act provides that fishing by foreign nations is limited to that portion of the OY that will not be harvested by vessels of the United States. The FMP must include an assessment to address the following, as required by section 303(a)(4) of the Magnuson-Stevens Act:

(A) *DAH.* Councils and/or the Secretary must consider the capacity of, and the extent to which, U.S. vessels will harvest the OY on an annual basis. Estimating the amount that U.S. fishing vessels will actually harvest is required to determine the surplus.

(B) *Domestic annual processing (DAP).* Each FMP must assess the capacity of U.S. processors. It must also assess the amount of DAP, which is the sum of two estimates: The estimated amount of U.S. harvest that domestic processors will process, which may be based on historical performance or on surveys of the expressed intention of manufacturers to process, supported by evidence of contracts, plant expansion, or other relevant information; and the estimated amount of fish that will be harvested by domestic vessels, but not processed (*e.g.*, marketed as fresh whole fish, used for private consumption, or used for bait).

(C) *Joint venture processing (JVP).* When DAH exceeds DAP, the surplus is available for JVP.

(f) *Acceptable biological catch, annual catch limits, and annual catch targets.* The following features (see paragraphs (f)(1) through (f)(5) of this section) of acceptable biological catch and annual catch limits apply to stocks and stock complexes in the fishery (see paragraph (d)(2) of this section).

(1) *Introduction.* A control rule is a policy for establishing a limit or target fishing level that is based on the best available scientific information and is established by fishery managers in consultation with fisheries scientists. Control rules should be designed so that management actions become more conservative as biomass estimates, or other proxies, for a stock or stock complex decline and as science and management uncertainty increases. Examples of scientific uncertainty include uncertainty in the estimates of MFMT and biomass. Management uncertainty may include late catch reporting, misreporting, and underreporting of catches and is affected by a fishery's ability to control actual catch. For example, a fishery that has inseason catch data available and inseason closure authority has better management control and precision than a fishery that does not have these features.

(2) *Definitions.* (i) *Catch* is the total quantity of fish, measured in weight or numbers of fish, taken in commercial, recreational, subsistence, tribal, and other fisheries. Catch includes fish that are retained for any purpose, as well as mortality of fish that are discarded.

(ii) *Acceptable biological catch (ABC)* is a level of a stock or stock complex's annual catch that accounts for the scientific uncertainty in the estimate of OFL and any other scientific uncertainty (see paragraph (f)(3) of this section), and should be specified based on the ABC control rule.

(iii) *ABC control rule* means a specified approach to setting the ABC for a stock or stock complex as a function of the scientific uncertainty in the estimate of OFL and any other scientific uncertainty (*see* paragraph (f)(4) of this section).

(iv) *Annual catch limit (ACL)* is the level of annual catch of a stock or stock complex that serves as the basis for invoking AMs. ACL cannot exceed the ABC, but may be divided into sector-ACLs (*see* paragraph (f)(5) of this section).

(v) *Annual catch target (ACT)* is an amount of annual catch of a stock or stock complex that is the management target of the fishery, and accounts for management uncertainty in controlling the actual catch at or below the ACL. ACTs are recommended in the system of accountability measures so that ACL is not exceeded.

(vi) *ACT control rule* means a specified approach to setting the ACT for a stock or stock complex such that the risk of exceeding the ACL due to management uncertainty is at an acceptably low level.

(3) *Specification of ABC.* ABC may not exceed OFL (see paragraph (e)(2)(i)(D) of this section). Councils should develop a process for receiving scientific information and advice used to establish ABC. This process should: Identify the body that will apply the ABC control rule (*i.e.* , calculates the ABC), and identify the review process that will evaluate the resulting ABC. The SSC must recommend the ABC to the Council. An SSC may recommend an ABC that differs from the result of the ABC control rule calculation, based on factors such as data uncertainty, recruitment variability, declining trends in population variables, and other factors, but must explain why. For Secretarial FMPs or FMP amendments, agency scientists or a peer review process would provide the scientific advice to establish ABC. For internationally-assessed stocks, an ABC as defined in these guidelines is not required if they meet the international exception (*see* paragraph (h)(2)(ii)). While the ABC is allowed to equal OFL, NMFS expects that in most cases ABC will be reduced from OFL to reduce the probability that overfishing might occur in a year. Also, *see* paragraph (f)(5) of this section for cases where a Council recommends that ACL is equal to ABC, and ABC is equal to OFL.

(i) *Expression of ABC.* ABC should be expressed in terms of catch, but may be expressed in terms of landings as long as estimates of bycatch and any other fishing mortality not accounted for in the landings are incorporated into the determination of ABC.

(ii) *ABC for overfished stocks.* For overfished stocks and stock complexes, a rebuilding ABC must be set to reflect the annual catch that is consistent with the schedule of fishing mortality rates in the rebuilding plan.

(4) *ABC control rule.* For stocks and stock complexes required to have an ABC, each Council must establish an ABC control rule based on scientific advice from its SSC. The determination of ABC should be based, when possible, on the probability that an actual catch equal to the stock's ABC would result in overfishing. This probability that overfishing will occur cannot exceed 50 percent and should be a lower value. The ABC control rule should consider reducing fishing mortality as stock size declines and may establish a stock abundance level below which fishing would not be allowed. The process of establishing an ABC control rule could also involve science advisors or the peer review process established under Magnuson-Stevens Act section 302(g)(1)(E). The ABC control rule must articulate how ABC will be set compared to the OFL based on the scientific knowledge about the stock or stock complex and the scientific uncertainty in the estimate of OFL and any other scientific uncertainty. The ABC control rule should consider uncertainty in factors such as stock assessment results, time lags in updating assessments, the degree of retrospective revision of assessment results, and projections. The control rule may be used in a tiered approach to address different levels of scientific uncertainty.

(5) *Setting the annual catch limit*—(i) *General.* ACL cannot exceed the ABC and may be set annually or on a multiyear plan basis. ACLs in coordination with AMs must prevent overfishing (see MSA section 303(a)(15)). If a Council recommends an ACL which equals ABC, and the ABC is equal to OFL, the Secretary may presume that the proposal would not prevent overfishing, in the absence of sufficient analysis and justification for the approach. A ''multiyear plan'' as referenced in section 303(a)(15) of the Magnuson-Stevens Act is a plan that establishes harvest specifications or harvest guidelines for each year of a time period greater than 1 year. A multiyear plan must include a mechanism for specifying ACLs for each year with appropriate AMs to prevent overfishing and maintain an appropriate rate of rebuilding if the stock or stock complex is in a rebuilding plan. A multiyear plan must provide that, if an ACL is exceeded for a year, then AMs are triggered for the next year consistent with paragraph (g)(3) of this section.

(ii) *Sector-ACLs.* A Council may, but is not required to, divide an ACL into sector-ACLs. ''Sector,'' for purposes of this section, means a distinct user group to which separate management strategies and separate catch quotas apply. Examples of sectors include the commercial sector, recreational sector, or various gear groups within a fishery. If the management measures for different sectors differ in the degree of management uncertainty, then sector ACLs may be necessary so that appropriate AMs can be developed for each sector. If a Council chooses to use sector ACLs, the sum of sector ACLs must not exceed the stock or stock complex level ACL. The system of ACLs and AMs designed must be effective in protecting the stock or stock complex as a whole. Even if sector-ACLs and AMs are established, additional AMs at the stock or stock complex level may be necessary.

(iii) *ACLs for State-Federal Fisheries.* For stocks or stock complexes that have harvest in state or territorial waters, FMPs and FMP amendments should include an ACL for the overall stock that may be further divided. For example, the overall ACL could be divided into a Federal-ACL and state-ACL. However, NMFS recognizes that Federal management is limited to the portion of the fishery under Federal authority (*see* paragraph (g)(5) of this section). When stocks are co-managed by Federal, state, tribal, and/or territorial fishery managers, the goal should be to develop collaborative conservation and management strategies, and scientific capacity to support such strategies (including AMs for state or territorial and Federal waters), to prevent overfishing of shared stocks and ensure their sustainability.

(6) *ACT control rule.* If ACT is specified as part of the AMs for a fishery, an ACT control rule is utilized for setting the ACT. The ACT control rule should clearly articulate how management uncertainty in the amount of catch in the fishery is accounted for in setting ACT. The objective for establishing the ACT and related AMs is that the ACL not be exceeded.

(i) *Determining management uncertainty.* Two sources of management uncertainty should be accounted for in establishing the AMs for a fishery, including the ACT control rule if utilized: Uncertainty in the ability of managers to constrain catch so the ACL is not exceeded, and uncertainty in quantifying the true catch amounts (*i.e.,* estimation errors). To determine the level of management uncertainty in controlling catch, analyses need to consider past management performance in the fishery and factors such as time lags in reported catch. Such analyses must be based on the best available scientific information from an SSC, agency scientists, or peer review process as appropriate.

(ii) *Establishing tiers and corresponding ACT control rules.* Tiers can be established based on levels of management uncertainty associated with the fishery, frequency and accuracy of catch monitoring data

available, and risks of exceeding the limit. An ACT control rule could be established for each tier and have, as appropriate, different formulas and standards used to establish the ACT.

(7) A Council may choose to use a single control rule that combines both scientific and management uncertainty and supports the ABC recommendation and establishment of ACL and if used ACT.

(g) *Accountability measures.* The following features (see paragraphs (g)(1) through (5) of this section) of accountability measures apply to those stocks and stock complexes in the fishery.

(1) *Introduction.* AMs are management controls to prevent ACLs, including sector-ACLs, from being exceeded, and to correct or mitigate overages of the ACL if they occur. AMs should address and minimize both the frequency and magnitude of overages and correct the problems that caused the overage in as short a time as possible. NMFS identifies two categories of AMs, inseason AMs and AMs for when the ACL is exceeded.

(2) *Inseason AMs.* Whenever possible, FMPs should include inseason monitoring and management measures to prevent catch from exceeding ACLs. Inseason AMs could include, but are not limited to: ACT; closure of a fishery; closure of specific areas; changes in gear; changes in trip size or bag limits; reductions in effort; or other appropriate management controls for the fishery. If final data or data components of catch are delayed, Councils should make appropriate use of preliminary data, such as landed catch, in implementing inseason AMs. FMPs should contain inseason closure authority giving NMFS the ability to close fisheries if it determines, based on data that it deems sufficiently reliable, that an ACL has been exceeded or is projected to be reached, and that closure of the fishery is necessary to prevent overfishing. For fisheries without inseason management control to prevent the ACL from being exceeded, AMs should utilize ACTs that are set below ACLs so that catches do not exceed the ACL.

(3) *AMs for when the ACL is exceeded.* On an annual basis, the Council must determine as soon as possible after the fishing year if an ACL was exceeded. If an ACL was exceeded, AMs must be triggered and implemented as soon as possible to correct the operational issue that caused the ACL overage, as well as any biological consequences to the stock or stock complex resulting from the overage when it is known. These AMs could include, among other things, modifications of inseason AMs or overage adjustments. For stocks and stock complexes in rebuilding plans, the AMs should include overage adjustments that reduce the ACLs in the next fishing year by the full amount of the overages, unless the best scientific information available shows that a reduced overage adjustment, or no adjustment, is needed to mitigate the effects of the overages. If catch exceeds the ACL for a given stock or stock complex more than once in the last four years, the system of ACLs and AMs should be re-evaluated, and modified if necessary, to improve its performance and effectiveness. A Council could choose a higher performance standard (e.g., a stock's catch should not exceed its ACL more often than once every five or six years) for a stock that is particularly vulnerable to the effects of overfishing, if the vulnerability of the stock has not already been accounted for in the ABC control rule.

(4) *AMs based on multi-year average data.* Some fisheries have highly variable annual catches and lack reliable inseason or annual data on which to base AMs. If there are insufficient data upon which to compare catch to ACL, either inseason or on an annual basis, AMs could be based on comparisons of average catch to average ACL over a three-year moving average period or, if supported by analysis, some other appropriate multi-year period. Councils should explain why basing AMs on a multi-year period is appropriate. Evaluation of the moving average catch to the average ACL must be conducted annually and AMs should be implemented if the average catch exceeds the average ACL. As a performance standard, if the average catch exceeds the average ACL for a stock or stock complex more than once in the last four years, then the system of ACLs and AMs should be re-evaluated and modified if necessary to improve its performance and effectiveness. The initial ACL and management measures may incorporate information from previous years so that AMs based on average ACLs can be applied from the first year. Alternatively, a Council could use a stepped approach where in year-1, catch is compared to the ACL for year-1; in year-2 the average catch for the past 2 years is compared to the average ACL; then in year 3 and beyond, the most recent 3 years of catch are compared to the corresponding ACLs for those years.

(5) *AMs for State-Federal Fisheries.* For stocks or stock complexes that have harvest in state or territorial waters, FMPs and FMP amendments must, at a minimum, have AMs for the portion of the fishery under Federal authority. Such AMs could include closing the EEZ when the Federal portion of the ACL is reached, or the overall stock's ACL is reached, or other measures.

(h) *Establishing ACL mechanisms and AMs in FMPs.* FMPs or FMP amendments must establish ACL mechanisms and AMs for all stocks and stock complexes in the fishery, unless paragraph (h)(2) of this section is applicable. These mechanisms should describe the annual or multiyear process by which specific ACLs, AMs, and other reference points such as OFL, and ABC will be established. If a complex has multiple indicator stocks, each indicator stock must have its own ACL; an additional ACL for the stock complex as a whole is optional. In cases where fisheries (e.g., Pacific salmon) harvest multiple indicator stocks of a single species that cannot be distinguished at the time of capture, separate ACLs for the indicator stocks are not required and the ACL can be established for the complex as a whole.

(1) In establishing ACL mechanisms and AMs, FMPs should describe:

(i) Timeframes for setting ACLs (e.g., annually or multi-year periods);

(ii) Sector-ACLs, if any (including set-asides for research or bycatch);

(iii) AMs and how AMs are triggered and what sources of data will be used (e.g., inseason data, annual catch compared to the ACL, or multi-year averaging approach); and

(iv) Sector-AMs, if there are sector-ACLs.

(2) *Exceptions from ACL and AM requirements*—(i) *Life cycle.* Section 303(a)(15) of the Magnuson-Stevens Act ''shall not apply to a fishery for species that has a life cycle of approximately 1 year unless the Secretary has determined the fishery is subject to overfishing of that species'' (as described in Magnuson-Stevens Act section 303 note). This exception applies to a stock for which the average length of time it takes for an individual to produce a reproductively active offspring is approximately 1 year and that the individual has only one breeding season in its lifetime. While exempt from the ACL and AM requirements, FMPs or FMP amendments for these stocks must have SDC, MSY, OY, ABC, and an ABC control rule.

(ii) *International fishery agreements.* Section 303(a)(15) of the Magnuson-Stevens Act applies ''unless otherwise provided for under an international agreement in which the United States participates'' (Magnuson-Stevens Act section 303 note). This exception applies to stocks or stock complexes

subject to management under an international agreement, which is defined as ''any bilateral or multilateral treaty, convention, or agreement which relates to fishing and to which the United States is a party'' (see Magnuson-Stevens Act section 3(24)). These stocks would still need to have SDC and MSY.

(3) *Flexibility in application of NS1 guidelines*. There are limited circumstances that may not fit the standard approaches to specification of reference points and management measures set forth in these guidelines. These include, among other things, conservation and management of Endangered Species Act listed species, harvests from aquaculture operations, and stocks with unusual life history characteristics (e.g., Pacific salmon, where the spawning potential for a stock is spread over a multi-year period). In these circumstances, Councils may propose alternative approaches for satisfying the NS1 requirements of the Magnuson-Stevens Act than those set forth in these guidelines. Councils must document their rationale for any alternative approaches for these limited circumstances in an FMP or FMP amendment, which will be reviewed for consistency with the Magnuson-Stevens Act.

(i) *Fisheries data*. In their FMPs, or associated public documents such as SAFE reports as appropriate, Councils must describe general data collection methods, as well as any specific data collection methods used for all stocks in the fishery, and EC species, including:

(1) Sources of fishing mortality (both landed and discarded), including commercial and recreational catch and bycatch in other fisheries;

(2) Description of the data collection and estimation methods used to quantify total catch mortality in each fishery, including information on the management tools used (i.e., logbooks, vessel monitoring systems, observer programs, landings reports, fish tickets, processor reports, dealer reports, recreational angler surveys, or other methods); the frequency with which data are collected and updated; and the scope of sampling coverage for each fishery; and

(3) Description of the methods used to compile catch data from various catch data collection methods and how those data are used to determine the relationship between total catch at a given point in time and the ACL for stocks and stock complexes that are part of a fishery.

(j) *Council actions to address overfishing and rebuilding for stocks and stock complexes in the fishery*—(1) *Notification*. The Secretary will immediately notify in writing a Regional Fishery Management Council whenever it is determined that:

(i) Overfishing is occurring;

(ii) A stock or stock complex is overfished;

(iii) A stock or stock complex is approaching an overfished condition; or

(iv) Existing remedial action taken for the purpose of ending previously identified overfishing or rebuilding a previously identified overfished stock or stock complex has not resulted in adequate progress.

(2) *Timing of actions*—(i) *If a stock or stock complex is undergoing overfishing*. FMPs or FMP amendments must establish ACL and AM mechanisms in 2010, for stocks and stock complexes determined to be subject to overfishing, and in 2011, for all other stocks and stock complexes (*see* paragraph (b)(2)(iii) of this section). To address practical implementation aspects of the FMP and FMP amendment process, paragraphs (j)(2)(i)(A) through (C) of this section clarifies the expected timing of actions.

(A) In addition to establishing ACL and AM mechanisms, the ACLs and AMs themselves must be specified in FMPs, FMP amendments, implementing regulations, or annual specifications beginning in 2010 or 2011, as appropriate.

(B) For stocks and stock complexes still determined to be subject to overfishing at the end of 2008, ACL and AM mechanisms and the ACLs and AMs themselves must be effective in fishing year 2010.

(C) For stocks and stock complexes determined to be subject to overfishing during 2009, ACL and AM mechanisms and ACLs and AMs themselves should be effective in fishing year 2010, if possible, or in fishing year 2011, at the latest.

(ii) *If a stock or stock complex is overfished or approaching an overfished condition*. (A) For notifications that a stock or stock complex is overfished or approaching an overfished condition made before July 12, 2009, a Council must prepare an FMP, FMP amendment, or proposed regulations within one year of notification. If the stock or stock complex is overfished, the purpose of the action is to specify a time period for ending overfishing and rebuilding the stock or stock complex that will be as short as possible as described under section 304(e)(4) of the Magnuson-Stevens Act. If the stock or stock complex is approaching an overfished condition, the purpose of the action is to prevent the biomass from declining below the MSST.

(B) For notifications that a stock or stock complex is overfished or approaching an overfished condition made after July 12, 2009, a Council must prepare and implement an FMP, FMP amendment, or proposed regulations within two years of notification, consistent with the requirements of section 304(e)(3) of the Magnuson-Stevens Act. Council actions should be submitted to NMFS within 15 months of notification to ensure sufficient time for the Secretary to implement the measures, if approved. If the stock or stock complex is overfished and overfishing is occurring, the rebuilding plan must end overfishing immediately and be consistent with ACL and AM requirements of the Magnuson-Stevens Act.

(3) *Overfished fishery*. (i) Where a stock or stock complex is overfished, a Council must specify a time period for rebuilding the stock or stock complex based on factors specified in Magnuson-Stevens Act section 304(e)(4). This target time for rebuilding (T_{target}) shall be as short as possible, taking into account: The status and biology of any overfished stock, the needs of fishing communities, recommendations by international organizations in which the U.S. participates, and interaction of the stock within the marine ecosystem. In addition, the time period shall not exceed 10 years, except where biology of the stock, other environmental conditions, or management measures under an international agreement to which the U.S. participates, dictate otherwise. SSCs (or agency scientists or peer review processes in the case of Secretarial actions) shall provide recommendations for achieving rebuilding targets (*see* Magnuson-Stevens Act section 302(g)(1)(B)). The above factors enter into the specification of T_{target} as follows:

(A) The ''minimum time for rebuilding a stock'' (T_{min}) means the amount of time the stock or stock complex is expected to take to rebuild to its MSY biomass level in the absence of any fishing mortality. In this context, the term ''expected'' means to have at least a 50 percent probability of attaining the B_{msy}.

(B) For scenarios under paragraph (j)(2)(ii)(A) of this section, the starting year for the T_{min} calculation is the first year that a rebuilding plan is implemented. For scenarios under paragraph (j)(2)(ii)(B) of this section, the starting year for the T_{min} calculation is 2 years after notification that a stock or stock complex is overfished or the first year that a rebuilding plan is implemented, whichever is sooner.

(C) If T_{min} for the stock or stock complex is 10 years or less, then the maximum time allowable for rebuilding (T_{max}) that stock to its B_{msy} is 10 years.

(D) If T_{min} for the stock or stock complex exceeds 10 years, then the maximum time allowable for rebuilding a stock or stock complex to its B_{msy} is T_{min} plus the length of time associated with one generation time for that stock or stock complex. ''Generation time'' is the average length of time between when an individual is born and the birth of its offspring.

(E) T_{target} shall not exceed T_{max}, and should be calculated based on the factors described in this paragraph (j)(3).

(ii) If a stock or stock complex reached the end of its rebuilding plan period and has not yet been determined to be rebuilt, then the rebuilding F should not be increased until the stock or stock complex has been demonstrated to be rebuilt. If the rebuilding plan was based on a T_{target} that was less than T_{max}, and the stock or stock complex is not rebuilt by T_{target}, rebuilding measures should be revised, if necessary, such that the stock or stock complex will be rebuilt by T_{max}. If the stock or stock complex has not rebuilt by T_{max}, then the fishing mortality rate should be maintained at $F_{rebuild}$ or 75 percent of the MFMT, whichever is less.

(iii) Council action addressing an overfished fishery must allocate both overfishing restrictions and recovery benefits fairly and equitably among sectors of the fishery.

(iv) For fisheries managed under an international agreement, Council action addressing an overfished fishery must reflect traditional participation in the fishery, relative to other nations, by fishermen of the United States.

(4) *Emergency actions and interim measures.* The Secretary, on his/her own initiative or in response to a Council request, may implement interim measures to reduce overfishing or promulgate regulations to address an emergency (Magnuson-Stevens Act section 304(e)(6) or 305(c)). In considering a Council request for action, the Secretary would consider, among other things, the need for and urgency of the action and public interest considerations, such as benefits to the stock or stock complex and impacts on participants in the fishery.

(i) These measures may remain in effect for not more than 180 days, but may be extended for an additional 186 days if the public has had an opportunity to comment on the measures and, in the case of Council-recommended measures, the Council is actively preparing an FMP, FMP amendment, or proposed regulations to address the emergency or overfishing on a permanent basis.

(ii) Often, these measures need to be implemented without prior notice and an opportunity for public comment, as it would be impracticable to provide for such processes given the need to act quickly and also contrary to the public interest to delay action. However, emergency regulations and interim measures that do not qualify for waivers or exceptions under the Administrative Procedure Act would need to follow proposed notice and comment rulemaking procedures.

(k) *International overfishing.* If the Secretary determines that a fishery is overfished or approaching a condition of being overfished due to excessive international fishing pressure, and for which there are no management measures (or no effective measures) to end overfishing under an international agreement to which the United States is a party, then the Secretary and/or the appropriate Council shall take certain actions as provided under Magnuson-Stevens Act section 304(i). The Secretary, in cooperation with the Secretary of State, must immediately take appropriate action at the international level to end the overfishing. In addition, within one year after the determination, the Secretary and/or appropriate Council shall:

(1) Develop recommendations for domestic regulations to address the relative impact of the U.S. fishing vessels on the stock. Council recommendations should be submitted to the Secretary.

(2) Develop and submit recommendations to the Secretary of State, and to the Congress, for international actions that will end overfishing in the fishery and rebuild the affected stocks, taking into account the relative impact of vessels of other nations and vessels of the United States on the relevant stock. Councils should, in consultation with the Secretary, develop recommendations that take into consideration relevant provisions of the Magnuson-Stevens Act and NS1 guidelines, including section 304(e) of the Magnuson-Stevens Act and paragraph (j)(3)(iv) of this section, and other applicable laws. For highly migratory species in the Pacific, recommendations from the Western Pacific, North Pacific, or Pacific Councils must be developed and submitted consistent with Magnuson-Stevens Reauthorization Act section 503(f), as appropriate.

(3) *Considerations for assessing ''relative impact.''* ''Relative impact'' under paragraphs (k)(1) and (2) of this section may include consideration of factors that include, but are not limited to: Domestic and international management measures already in place, management history of a given nation, estimates of a nation's landings or catch (including bycatch) in a given fishery, and estimates of a nation's mortality contributions in a given fishery. Information used to determine relative impact must be based upon the best available scientific information.

(l) *Relationship of National Standard 1 to other national standards—General.* National Standards 2 through 10 provide further requirements for conservation and management measures in FMPs, but do not alter the requirement of NS1 to prevent overfishing and rebuild overfished stocks.

(1) *National Standard 2 (see § 600.315).* Management measures and reference points to implement NS1 must be based on the best scientific information available. When data are insufficient to estimate reference points directly, Councils should develop reasonable proxies to the extent possible (*also see* paragraph (e)(1)(iv) of this section). In cases where scientific data are severely limited, effort should also be directed to identifying and gathering the needed data. SSCs should advise their Councils regarding the best scientific information available for fishery management decisions.

(2) *National Standard 3 (see § 600.320).* Reference points should generally be specified in terms of the level of stock aggregation for which the best scientific information is available (*also see* paragraph (e)(1)(iii) of this section). Also, scientific assessments must be based on the best information about the total range of the stock and potential biological structuring of the stock into biological sub-units, which may differ from the geographic units on which management is feasible.

(3) *National Standard 6 (see § 600.335).* Councils must build into the reference points and control rules appropriate consideration of risk, taking into account uncertainties in estimating harvest, stock conditions, life history parameters, or the effects of environmental factors.

(4) *National Standard 8 (see § 600.345).* National Standard 8 directs the Councils to apply economic and social factors towards sustained participation of fishing communities and to the extent practicable, minimize adverse economic impacts on such communities within the context of preventing overfishing and rebuilding overfished stocks as required under National Standard 1. Therefore, calculation of OY as reduced from MSY

should include economic and social factors, but the combination of management measures chosen to achieve the OY must principally be designed to prevent overfishing and rebuild overfished stocks.

(5) *National Standard 9 (see § 600.350).* Evaluation of stock status with respect to reference points must take into account mortality caused by bycatch. In addition, the estimation of catch should include the mortality of fish that are discarded.

(m) *Exceptions to requirements to prevent overfishing.* Exceptions to the requirement to prevent overfishing could apply under certain limited circumstances. Harvesting one stock at its optimum level may result in overfishing of another stock when the two stocks tend to be caught together (This can occur when the two stocks are part of the same fishery or if one is bycatch in the other's fishery). Before a Council may decide to allow this type of overfishing, an analysis must be performed and the analysis must contain a justification in terms of overall benefits, including a comparison of benefits under alternative management measures, and an analysis of the risk of any stock or stock complex falling below its MSST. The Council may decide to allow this type of overfishing if the fishery is not overfished and the analysis demonstrates that all of the following conditions are satisfied:

(1) Such action will result in long-term net benefits to the Nation;

(2) Mitigating measures have been considered and it has been demonstrated that a similar level of long-term net benefits cannot be achieved by modifying fleet behavior, gear selection/configuration, or other technical characteristic in a manner such that no overfishing would occur; and

(3) The resulting rate of fishing mortality will not cause any stock or stock complex to fall below its MSST more than 50 percent of the time in the long term, although it is recognized that persistent overfishing is expected to cause the affected stock to fall below its B_{msy} more than 50 percent of the time in the long term.

[FR Doc. E9–636 Filed 1–15–09; 8:45 am]

BILLING CODE 3510–22–P

Federal Register

Friday,
January 16, 2009

Part IV

Department of Commerce

National Oceanic and Atmospheric Administration

15 CFR Part 922
Channel Islands National Marine Sanctuary Regulations; Final Rule

DEPARTMENT OF COMMERCE

National Oceanic and Atmospheric Administration

15 CFR Part 922

[Docket No. 080311420–9008–02]

RIN 0648–AT17

Channel Islands National Marine Sanctuary Regulations

AGENCY: Office of National Marine Sanctuaries (ONMS), National Ocean Service (NOS), National Oceanic and Atmospheric Administration (NOAA), Department of Commerce (DOC).

ACTION: Final rule.

SUMMARY: The National Oceanic and Atmospheric Administration (NOAA) publishes this rule to finalize the regulations for the Channel Islands National Marine Sanctuary (CINMS or Sanctuary). This final rule revises the regulations to implement prohibitions on: Exploring for, developing, or producing minerals within the Sanctuary; abandoning matter on or in Sanctuary submerged lands; taking marine mammals, sea turtles, or seabirds within or above the Sanctuary; possessing within the Sanctuary any marine mammal, sea turtle, or seabird; marking, defacing, damaging, moving, removing, or tampering with Sanctuary signs, monuments, boundary markers, or similar items; introducing or otherwise releasing from within or into the Sanctuary an introduced species; and operating motorized personal watercraft within waters of the Sanctuary that are coextensive with the Channel Islands National Park. NOAA also makes additional changes to the grammar and wording of several sections of the regulations to ensure clarity. Finally, NOAA publishes the Sanctuary's revised terms of designation.

DATES: *Effective Date:* Pursuant to section 304(b) of the National Marine Sanctuaries Act (NMSA) (16 U.S.C. 1434(b)), the revised terms of designation and regulations shall take effect and become final after the close of a review period of forty-five days of continuous session of Congress beginning on January 16, 2009. Announcement of the effective date of the final regulations will be published in the **Federal Register**.

ADDRESSES: Copies of the final management plan (FMP) and final environmental impact statement (FEIS) are available at Channel Islands National Marine Sanctuary, 113 Harbor Way, Suite 150, Santa Barbara, California and on the Web at *http://channelislands.noaa.gov.*

FOR FURTHER INFORMATION CONTACT: Michael Murray at (805) 884–1464.

SUPPLEMENTARY INFORMATION:

I. Introduction

Pursuant to section 304(e) of the National Marine Sanctuaries Act (NMSA; 16 U.S.C. 1434(e)), NOAA conducted a review of the management plan and regulations for the Channel Islands National Marine Sanctuary (CINMS or Sanctuary), located off Santa Barbara and Ventura counties in southern California. As a result of the review, NOAA determined that it was necessary to revise the management plan and regulations for the Sanctuary and subsequently published a draft revised management plan, proposed rule, and draft environmental impact statement (71 FR 29096; May 19, 2006). NOAA later published a supplemental proposed rule and supplemental draft environmental impact statement (73 FR 16580; March 28, 2008).

The revised management plan for the Sanctuary contains a series of action plans that outline management, research, education, operational, and evaluation activities for the next five years. The activities are designed to address specific issues facing the Sanctuary and, in doing so, help achieve the mandates of the NMSA and the Sanctuary's designation. NOAA has also revised several sections of the Sanctuary's terms of designation. This final rule publishes these revisions, as well as revisions to Sanctuary regulations. These revisions are described below in the ''Terms of Designation'' and ''Summary of the Regulatory Amendments'' sections and are analyzed in the FEIS. The FMP and FEIS are available at *http://channelislands.noaa.gov* or may be obtained by contacting the individual listed under the heading **FOR FURTHER INFORMATION CONTACT**.

A. Marine Reserves and Conservation Areas

In 2002, NOAA considered merging the environmental review processes for management plan review and the consideration of marine zones within the Sanctuary, but subsequently determined that it was more appropriate to proceed with two separate processes for these actions because of differing process needs regarding coordination with the State of California and Pacific Fishery Management Council. Consequently, NOAA prepared a separate DEIS and proposed rule (71 FR 46134; August 11, 2006) and FEIS and final rule (72 FR 29208; May 24, 2007) to address marine zones in the Sanctuary. As such, that process is outside the scope of this rule.

B. Sanctuary Environment

Designated on October 2, 1980 (45 FR 65200), the Sanctuary consists of an area off the coast of southern California of approximately 1470 square statute miles (1110 square nmi) [1] adjacent to the following islands and offshore rocks: San Miguel Island, Santa Cruz Island, Santa Rosa Island, Anacapa Island, Santa Barbara Island, Richardson Rock, and Castle Rock (the Islands) extending seaward to a distance of approximately six nmi. The Sanctuary is located within the upper portion of the Southern California Bight (SCB), which is formed by a transition in the California coastline wherein the north-south trending coast begins to trend east to west. The SCB stretches from Point Conception in the north to Punta Eugenia (Mexico) in the south. Due to the oceanographic features of the SCB, its two biogeographic provinces or bioregions (areas characterized by distinct patterns of species abundance and distribution) and a transition zone between them, and the complex bottom topography and diversity of habitats found at the Islands, the Sanctuary has a great diversity of marine life.

Numerous important habitats are represented within the Sanctuary including kelp forests, surfgrass and eelgrass, intertidal, nearshore subtidal, deep-water benthic, and pelagic habitats.

The Sanctuary's cultural values stem largely from its rich array of maritime heritage resources (paleontological remains, prehistoric archaeological sites and their associated artifacts, shipwrecks, aircraft wrecks, and material associated with wharves, piers

[1] From 1980 to 2007, the area of CINMS was described as approximately 1252.5 square nautical miles. However, in 2007 NOAA re-calculated the original CINMS area as approximately 1113 square nautical miles (72 FR 29208). Also in 2007, NOAA designated the federal portion of the Channel Islands MPA network, consisting of eight marine reserves and one marine conservation area within the CINMS (72 FR 29208). The marine reserves are distributed throughout the CINMS and extend slightly beyond the original boundaries of the CINMS in four locations, increasing the overall size of the Sanctuary by approximately 15 square nautical miles. This change allowed the boundary of four of the marine reserves to be defined by straight lines projecting outside the original CINMS boundary, allowing for better enforcement of the marine reserves. Since then, adjusting for technical corrections and using updated technologies, NOAA has re-calculated the CINMS area as approximately 1470 square statute miles (1110 square nmi). This change does not constitute a change in the geographic area of the Sanctuary, but rather an improvement in the estimate of its size.

and landings). Carbon dating indicates that humans were present at the Islands as early as 13,000 years ago. The Islands and surrounding Sanctuary contain an abundance of prehistoric Native American Chumash artifacts and are still revered as part of the traditional homeland by contemporary Chumash. Historical remains may exist from as early as Juan Rodriguez Cabrillo's voyage (1542 to 1543) through modern times. Known historical remains are represented in an inventory of over 140 shipwrecks and aircraft wrecks documented as existing in the Sanctuary since 1853. The uniqueness of the Sanctuary region and its proximity to several major ports and harbors along the mainland coast has made it a popular destination for numerous recreational and commercial activities. Sportfishing, diving, snorkeling, whale watching, pleasure boating, kayaking, surfing, and sightseeing are all popular pastimes within the Sanctuary, which is often referred to as ''the Galapagos of the north.'' Commercial activities include fishing, whale watching, chartered tours, and maritime shipping.

The Sanctuary is located near an area of southern California coastline that has experienced a dramatic increase in population. Whereas the population of southern California (Imperial, Los Angeles, Orange, Riverside, San Bernardino, San Diego, Santa Barbara, and Ventura counties) was approximately 13.5 million in 1980, population levels now reach nearly 20 million. This represents a regional increase in population of approximately 43%. Aerial and on-water surveys indicate that visitation to CINMS has increased significantly since 1980. With continued technological innovations such as global positioning systems (GPS) and improved watercraft design, it is likely that there will be continued increasing visitation to the Sanctuary and added pressure on its resources. With its proposed revised management plan and regulations, NOAA continues to protect CINMS for appreciation and appropriate use by current and future generations. For a more detailed description of the Sanctuary environment, please refer to the final environmental impact statement available on the Sanctuary Web site at *http://channelislands.noaa.gov.*

II. Changes to the Sanctuary Terms of Designation

Section 304(a)(4) of the NMSA (16 U.S.C. 1434(a)(4)) requires that, in designating national marine sanctuaries, NOAA specify the sanctuary's ''terms of designation.'' The NMSA requires that each sanctuary's terms of designation include:

1. The geographic area proposed to be included within the sanctuary;

2. The characteristics of the area that give it conservation, recreational, ecological, historical, research, educational, or esthetic value; and

3. The types of activities that will be subject to regulation by the Secretary to protect those characteristics.

The CINMS terms of designation were originally published in 1980 upon establishment of the Sanctuary and revised in 2007 (45 FR 65198, published October 2, 1980; and 72 FR 29208, published May 24, 2007, respectively).

NOAA is revising the Sanctuary's terms of designation as follows:

1. Modifying the characteristics that give the Sanctuary particular value (Article III) to clarify that the submerged lands at CINMS are legally part of the Sanctuary and are included in the boundary description. At the time the Sanctuary was designated in 1980, Title III of the Marine Protection, Research, and Sanctuaries Act (now also known as the NMSA) characterized national marine sanctuaries as consisting of coastal and ocean waters but did not expressly mention submerged lands thereunder. NOAA has consistently interpreted its authority under the NMSA as extending to submerged lands, and amendments to the NMSA in 1984 (Pub. L. 98–498) clarified that submerged lands may be designated by the Secretary of Commerce as part of a national marine sanctuary (16 U.S.C. 1432(3)). Therefore, NOAA is updating the terms of designation and the boundary description, and is also replacing the term ''seabed'' with ''submerged lands of the Sanctuary.'' In addition, NOAA is clarifying the description of the Sanctuary's shoreline boundary demarcation as the Mean High Water Line (MHWL) of Island shores.

2. Modifying the scope of activities that may be subject to regulation (Article IV) to authorize regulation of:

a. Exploring for, developing, or producing minerals within the Sanctuary;

b. Discharging or depositing from beyond the boundary of the Sanctuary any material or other matter that subsequently enters the Sanctuary and injures a Sanctuary resource or quality;

c. Placing or abandoning any structure, material, or other matter on or in the submerged lands of the Sanctuary;

d. Moving, injuring, possessing, or attempting to move, injure, or possess a Sanctuary historical resource;

e. Taking any marine mammal, sea turtle, or seabird within or above the Sanctuary;

f. Possessing within the Sanctuary (regardless of where taken from, moved, or removed from) any marine mammal, sea turtle or seabird;

g. Marking, defacing, damaging, moving, removing, or tampering with any sign, notice, or placard, whether temporary or permanent, or any monument, stake, post, or other boundary marker related to the Sanctuary; and

h. Introducing or otherwise releasing from within or into the Sanctuary an introduced species.

These substantive revisions to and addition of new activities subject to Sanctuary regulation enable new and emerging resource management issues to be addressed, and are necessary in order to ensure the protection, preservation, and management of the conservation, recreational, ecological, historical, cultural, educational, archeological, scientific, and esthetic resources and qualities of the Sanctuary.

3. Ensuring consistency of the sections on international law and emergency regulations with the NMSA and ONMS program-wide regulations (sections 2 and 3 of Article IV).

4. Updating the explanation of the effect of Sanctuary authority on preexisting leases, permits, licenses, and rights (section 3 of Article V).

5. Updating Article VI, ''Alterations to This Designation'', to reflect the NMSA as currently written.

6. Making other minor editorial changes in order to conform wording of the Sanctuary's terms of designation, where appropriate, to wording used in the NMSA and for more recently designated sanctuaries.

NOAA is not making any changes to the ''Fishing'' and ''Defense Activities'' sections within Article V (Relation to Other Regulatory Programs) of the terms of designation as part of this action.

Revised Terms of Designation for the Channel Islands National Marine Sanctuary

Article I. Effect of Designation

The Channel Islands National Marine Sanctuary was designated on October 2, 1980 (45 FR 65200). Section 308 of the National Marine Sanctuaries Act, 16 U.S.C. 1431 *et seq.*, (NMSA) authorizes the issuance of such regulations as may be necessary to implement the designation, including managing, protecting and preserving the conservation, recreational, ecological, historical, cultural, archeological, scientific, educational, and esthetic

resources and qualities of the Channel Islands National Marine Sanctuary (Sanctuary). Section 1 of Article IV of this Designation Document lists activities of the types that are to be regulated on the effective date of designation or may be regulated at some later date in order to protect Sanctuary resources and qualities. Listing does not necessarily mean that a type of activity will be regulated; however, if a type of activity is not listed it may not be regulated, except on an emergency basis, unless Section 1 of Article IV is amended to include the type of activity by the same procedures by which the original designation was made.

Article II. Description of the Area

The Sanctuary consists of an area of approximately 1,110 square nautical miles (nmi) of coastal and ocean waters, and the submerged lands thereunder, off the southern coast of California. The Sanctuary boundary begins at the Mean High Water Line of and extends seaward to a distance of approximately six nmi from the following islands and offshore rocks: San Miguel Island, Santa Cruz Island, Santa Rosa Island, Anacapa Island, Santa Barbara Island, Richardson Rock, and Castle Rock (the Islands). The seaward boundary coordinates are listed in an Appendix to 15 CFR 922 subpart G.

Article III. Characteristics of the Area That Give It Particular Value

The Islands and surrounding ecosystems are unique and highly valued, as demonstrated by, for example, several national and international designations. The Islands and surrounding ecosystems are characterized by a unique combination of features including: Complex oceanography, varied bathymetry, diverse habitats, remarkable biodiversity, rich maritime heritage, remote yet accessible location, and relative lack of development. These features yield high existence values as well as human use values for research, education, recreation, and commerce.

The Islands are located within a 300-mile long oceanographic region known as the Continental Borderland, a unique region of the continental shelf characterized by basins and elevated ridges. Within this region, the confluence of the cool California Current and warm Southern California Countercurrent creates two distinct bioregions in and around the Sanctuary: The cold Oregonian bioregion and the warm Californian bioregion. There is also a transition zone between the two regions. The overlap of these bioregions results in a unique and highly diverse array of marine life within the Sanctuary, including cold water species at the southern end of their range and warm water species at the northern end of their range. In addition, the Sanctuary is located offshore from Point Conception, the southernmost major upwelling center on the west coast of the United States. Upwelling yields increased primary productivity essential to the marine food web.

Diverse bathymetry and habitats are also important and unique characteristics of the Islands and surrounding ecosystems. The Sanctuary contains many important and varied physical and geological features including a complex of plateaus, continental slope, gyres, banks, subsea canyons, and rocky reefs. The diversity of accentuated bottom relief, abrupt change in depth, and varied substrate provide a spectrum of marine habitats. Some of the key marine habitats are sandy beach, rocky intertidal, kelp forest, rocky reef, and sandy bottom.

The Sanctuary's oceanographic and physical features support a great diversity of marine species, many of which are extremely rare and afforded special protection by federal and state law. At least 33 species of cetaceans are found within the Sanctuary, including blue, gray, and humpback whales and numerous dolphin species. While seven species of pinnipeds have been found historically throughout or in certain areas of the Sanctuary, at least four species maintain important rookery and/or haul out sites on the Islands. Following the 1987 to 1990 translocation of southern sea otters to San Nicolas Island, rare sea otter sightings have been reported in the Sanctuary. Over 60 species of seabird occur within the Sanctuary, eleven of which utilize breeding habitat at the Islands. In addition, over 400 species of fish and more than 5,000 species of invertebrates are found in the Sanctuary. Stranding data indicate that green, loggerhead, olive Ridley, and leatherback sea turtles may also be found within the Sanctuary. Finally, numerous marine algae and plant species occur within the Sanctuary, the most notable among these being giant kelp and eelgrass.

The quality and abundance of natural resources at the Islands and surrounding waters have attracted man from the earliest prehistoric times to the present. As a result, the Sanctuary contains significant prehistoric and historic maritime heritage resources. Prehistoric maritime heritage resources include submerged Native American Chumash sites, the significance of which is underscored by a terrestrial Island site with human remains dated to 13,000 years ago. Historic maritime heritage resources date back as far as 1542 and include over 140 historic shipwreck and aircraft sites. These wrecks reveal the diverse range of activities and nationalities that have traversed the Santa Barbara Channel. Following the mission era, human occupation of the Islands transitioned from significant Chumash Native American villages, to land grant and ranching settlements, and finally to joint public-private ownership and management aimed at resource conservation and compatible public use. Today's Chumash people continue to value and enjoy the Islands and surrounding Sanctuary waters, working to keep and revitalize their ancient Chumash maritime heritage. Despite this long history of human presence on the Islands, they remain remote yet accessible, and undeveloped relative to the burgeoning populations of nearby mainland southern California.

The physical, biological, and cultural characteristics of the Sanctuary combine to provide outstanding opportunities for appropriate scientific research, education, recreation, commerce, and natural and maritime heritage resource protection, preservation, and management. The Islands and surrounding Sanctuary are the subject of extensive research, primarily in the following categories: Physical and biological science research; socioeconomic, cultural, and historic research; and political science research. Since its designation in 1980, the Sanctuary has played an important role in marine science education for all ages on a local, regional, national, and international scale. Popular Sanctuary recreation activities include wildlife viewing, boating, sailing, kayaking, diving, and sportfishing. Commercial activities within the Sanctuary include maritime shipping, oil and gas activities (three leases units pre-date the Sanctuary), kelp harvesting, and commercial fishing. Some of the state's most valuable commercial fisheries occur within the Sanctuary. County, state, and federal agencies manage the resources of the Islands and surrounding area and human uses thereof.

Several special designations recognize the Islands' and surrounding ecosystems' unique value. In 1980, the United States designated both the Channel Islands National Marine Sanctuary, as well as the islands of Anacapa, San Miguel, Santa Barbara, Santa Cruz, and Santa Rosa and 125,000 acres of submerged lands surrounding them as the Channel Islands National Park. In addition, the United Nations

Educational, Scientific and Cultural Organization's (UNESCO) Man and the Biosphere Program designated the Sanctuary as a Biosphere Reserve in 1986.

Article IV. Scope of Regulations

Section 1. Activities Subject to Regulation

The following activities are subject to regulation, including prohibition, as may be necessary to ensure the management, protection, and preservation of the conservation, recreational, ecological, historical, cultural, archeological, scientific, educational, and esthetic resources and qualities of this area:

a. Exploring for, developing, or producing hydrocarbons or minerals within the Sanctuary;

b. Discharging or depositing from within or into the Sanctuary any material or other matter;

c. Discharging or depositing from beyond the boundary of the Sanctuary any material or other matter that subsequently enters the Sanctuary and injures a Sanctuary resource or quality;

d. Drilling into, dredging, or otherwise altering the submerged lands of the Sanctuary; or constructing, placing, or abandoning any structure, material, or other matter on or in the submerged lands of the Sanctuary;

e. Operating a vessel (*i.e.*, watercraft of any description) within the Sanctuary except fishing vessels or vessels traveling within a Vessel Traffic Separation Scheme or Port Access Route designated by the Coast Guard outside of 1 nmi from any Island;

f. Disturbing a marine mammal or seabird by an overflight below 1000 feet;

g. Within a marine reserve, marine park, or marine conservation area, harvesting, removing, taking, injuring, destroying, possessing, collecting, moving, or causing the loss of any Sanctuary resource, including living or dead organisms or historical resources, or attempting any of these activities;

h. Within a marine reserve, marine park, or marine conservation area, possessing fishing gear;

i. Moving, removing, injuring, possessing, or attempting to move, remove, injure, or possess a Sanctuary historical resource;

j. Taking any marine mammal, sea turtle, or seabird within or above the Sanctuary;

k. Possessing within the Sanctuary (regardless of where taken from, moved, or removed from) any marine mammal, sea turtle, or seabird;

l. Marking, defacing, damaging, moving, removing, or tampering with any sign, notice, or placard, whether temporary or permanent, or any monument, stake, post, or other boundary marker related to the Sanctuary;

m. Introducing or otherwise releasing from within or into the Sanctuary an introduced species.

Section 2. Consistency With International Law

The regulations governing the activities listed in Section 1 of this article shall be applied in accordance with generally recognized principles of international law, and in accordance with treaties, conventions, and other agreements to which the United States is a party. No regulation shall apply to or be enforced against a person who is not a citizen, national, or resident alien of the United States, unless in accordance with: Generally recognized principles of international law; an agreement between the United States and the foreign state of which the person is a citizen; or an agreement between the United States and the flag state of a foreign vessel, if the person is a crewmember of the vessel.

Section 3. Emergency Regulations

Where necessary to prevent or minimize the destruction of, loss of, or injury to a Sanctuary resource or quality, or minimize the imminent risk of such destruction, loss, or injury, any and all activities, including those not listed in section 1 of this Article, are subject to immediate temporary regulation, including prohibition, consistent with the Administrative Procedure Act.

Article V. Relation to Other Regulatory Programs

Section 1. Fishing

The regulation of fishing is not authorized under Article IV, except within portions of the Sanctuary designated as marine reserves, marine parks, or marine conservation areas established pursuant to the goals and objectives of the Sanctuary and within the scope of the State of California's Final Environmental Document ''Marine Protected Areas in NOAA's Channel Islands National Marine Sanctuary'' (California Department of Fish and Game, October 2002), certified by the California Fish and Game Commission. However, fishing vessels may be regulated with respect to discharges in accordance with Article IV, Section 1, paragraphs (b) and (c), and aircraft conducting kelp bed surveys below 1000 feet can be regulated in accordance with Article IV, Section 1, paragraph (f). All regulatory programs pertaining to fishing, including particularly regulations promulgated under the California Fish and Game Code and Fishery Management Plans promulgated under the Magnuson-Stevens Fishery Conservation and Management Act, 16 U.S.C. 1801 *et seq.*, shall remain in effect. All permits, licenses and other authorizations issued pursuant thereto shall be valid within the Sanctuary unless authorizing any activity prohibited by any regulation implementing Article IV. Fishing as used in this article and in Article IV includes kelp harvesting.

Section 2. Defense Activities

The regulation of those activities listed in Article IV shall not prohibit any activity conducted by the Department of Defense that is essential for national defense or because of an emergency. Such activities shall be consistent with the regulations to the maximum extent practicable.

Section 3. Effect on Leases, Permits, Licenses, and Rights

Pursuant to section 304(c) of the NMSA, 16 U.S.C. 1434(c), no valid lease, permit, license, approval, or other authorization issued by any federal, state, or local authority of competent jurisdiction, or any right of subsistence use or access, may be terminated by the Secretary of Commerce or designee as a result of this designation or as a result of any Sanctuary regulation if such authorization or right was in existence on the effective date of this designation. The Secretary of Commerce, or designee, however, may regulate the exercise (including, but not limited to, the imposition of terms and conditions) of such authorization or right consistent with the purposes for which the Sanctuary is designated.

Article VI. Alterations to This Designation

The terms of designation, as defined under section 304(a) of the NMSA, may be modified only by the same procedures by which the original designation is made, including public hearings, consultation with interested federal and state agencies and the Pacific Fishery Management Council, approval by the Secretary of Commerce or designee, and after the close of a review period of forty-five days of continuous session of Congress.

III. Summary of the Regulatory Amendments

This section describes the changes NOAA is making to the CINMS regulations.

1. Clarify and update Sanctuary boundary.

This rule clarifies that ''submerged lands'' are within the Sanctuary boundary, i.e., part of the Sanctuary. This updates the boundary regulation to make it consistent with the revised terms of designation. (See discussion above for more information.) This rule also clarifies the description of the shoreline boundary to make clear that the shoreline boundary is the Mean High Water Line (MHWL) of Island shores.

2. Revise oil and gas regulation, and add mineral regulation.

This rule modifies the oil and gas regulation by removing the oil spill contingency equipment requirements and modifying exceptions to this prohibition. The equipment requirements are outdated and unnecessary since Minerals Management Service lease agreement terms prescribe more stringent mandatory oil spill contingency plans.

This rule also prohibits exploring for, developing, or producing minerals within the Sanctuary, except producing by-products incidental to hydrocarbon production allowed under the regulations. ''Mineral'' is defined by the ONMS-wide regulations as clay, stone, sand, gravel, metalliferous ore, non-metalliferous ore, or any other solid material or other matter of commercial value (15 CFR 922.3). Mineral extraction activities could involve scraping the Sanctuary's seabed surface and/or excavation of pits and tunnels into the seabed. This prohibition protects Sanctuary resources and qualities from potentially damaging effects of offshore mineral activities, including (but not limited to): Destruction and direct smothering of the benthic biota; alteration of the seabed surface profile; potential harm to fisheries; introduction of substances (e.g., drill cuttings and mud) that could cause interference with the filtering, feeding, or respiratory functions of marine organisms; loss of food sources and habitat for some species; possible lowered photosynthesis and oxygen levels; and degraded appearance of the water itself. Finally, prohibition of mineral activities within the Sanctuary reduces the risk of potential disturbance to underwater historical resources either through physical disturbance or increased turbidity, which will result in direct long-term beneficial impact to historical resources. A prohibition on mineral activities within the Sanctuary is consistent with the prohibition on alteration of or construction on or in the submerged lands discussed below.

3. Revise regulations on discharge/deposit.

This rule also clarifies and otherwise modifies the regulations prohibiting discharging or depositing any material or other matter as follows:

a. Clarify that the regulation applies to discharges and deposits ''from within or into the Sanctuary.'' Using the word ''into'' is intended to make clear that it applies to not only discharges and deposits originating in the Sanctuary (including from vessels in the Sanctuary), but also to, e.g., discharges and deposits from aircraft above the Sanctuary, from docks and piers extending over the Sanctuary, and from cliffs and other land adjacent to the Sanctuary.

b. Clarify that the exception for fish, fish parts, or chumming materials (bait) applies only to such discharges or deposits that were used in or resulting from lawful fishing activity within the Sanctuary and provided that such discharges or deposits are during the conduct of lawful fishing activity in the Sanctuary.

c. Remove the exception for discharging or depositing biodegradable effluents generated by meals onboard vessels. Coast Guard regulations prohibit discharge/deposit of food wastes (garbage) within three nmi and prohibit discharge/deposit of food wastes unless ground to less than one inch within three to twelve nmi. The Sanctuary regulations are modified to mirror the Coast Guard regulations within three nmi and, beyond three nmi, provide increased protection to Sanctuary resources and qualities.

d. Clarify NOAA's original intent of prohibiting untreated sewage discharge/deposit within the Sanctuary. The exception for biodegradable effluent discharges/deposits from marine sanitation devices is now explicit in its application only to operable Type I or II marine sanitation devices approved by the United States Coast Guard in accordance with the Federal Water Pollution Control Act, as amended.

e. Prohibit discharges/deposits of treated and untreated sewage and graywater from vessels 300 gross registered tons (GRT) or greater, except oceangoing ships without sufficient holding tank capacity to hold sewage and graywater, respectively, while within the Sanctuary. Cruise ships (larger than 300 GRT) are not provided an exception and, therefore, are prohibited from discharging/depositing treated or untreated sewage and graywater in the Sanctuary.

These revisions address NOAA's concerns about possible impacts from large volumes of sewage discharges in the Sanctuary, whether treated or not, from large vessels (such as cruise ships). Vessel sewage discharges are more concentrated than domestic land-based sewage. They may introduce disease-causing microorganisms (pathogens), such as bacteria, protozoans, and viruses, into the marine environment (EPA 2007). They may also contain high concentrations of nutrients that can lead to eutrophication (the process that can cause oxygen-depleted ''dead zones'' in aquatic environments), and may yield unpleasant esthetic impacts to the Sanctuary (diminishing Sanctuary resources and its ecological, conservation, esthetic, recreational and other qualities).

Graywater can contain a variety of substances including (but not limited to) detergents, oil and grease, pesticides and food wastes (Eley 2000). Very little research has been done on the impacts of graywater on the marine environment, but many of the chemicals commonly found in graywater are known to be toxic (Casanova et al. 2001). These chemicals have been implicated in the occurrence of cancerous growths in bottom-dwelling fish (Mix 1986). Furthermore, studies of graywater discharges from large cruise ships in Alaska (prior to strict state effluent standards for cruise ship graywater discharges) found very high levels of fecal coliform in large cruise ship graywater (well exceeding the federal standards for fecal coliform from Type II MSDs). These same studies also found high mean total suspended solids in some graywater sources (exceeding the federal standards for total suspended solids from Type II MSDs). While many older ships have been modified to allow graywater retention, some must still discharge graywater directly as it is produced. Similarly, some older ships have very limited holding tank capacity for sewage. Consequently, given that many older vessels are still in operation, NOAA provides exceptions for sewage and graywater discharge from oceangoing ships without sufficient holding tank capacity to retain sewage or graywater, respectively, while in the Sanctuary.

Treated sewage and graywater discharge from small vessels, and from oceangoing ships without sufficient holding tank capacity to hold sewage and graywater while within the Sanctuary, is anticipated to have a less than significant adverse impact on the Sanctuary's physical, biological, and esthetic resources. Most oceangoing ships have sufficient holding tank capacity to hold sewage and graywater while within the Sanctuary. As for other oceangoing ships, given the much lower

number of people on oceangoing ships (as noted in the FEIS section 3.0, on average oceangoing ships carry crews of approximately twenty people, but may range from five to fifty people), the treated sewage and graywater generated by such ships is far less in quantity as compared to that from cruise ships, and is therefore not expected to contain the larger volume of possible harmful nutrients, pathogens, and chemicals that can be found in cruise ship treated sewage and graywater.

Additional details on the potential impacts to Sanctuary resources from graywater and treated sewage discharges/deposits are provided in the FEIS.

f. Provide a definition of ''graywater'' that reads as follows: ''Graywater means galley, bath, or shower water.'' Other discharges, such as those from laundry facilities, are not included in this definition, which is based on section 312 of the CWA. In May 2006, NOAA's proposed rule (71 FR 29096; May 19, 2006) referred to the definition of graywater codified by the CWA; however, due to comments received, NOAA added a free-standing definition for graywater, rather than referring to the CWA.

g. Adopt, for consistency purposes, in relevant part, the existing California Clean Coast Act definition of ''oceangoing ship'' (California Public Resources Code sec. 72410(j)). The definition of ''oceangoing ship'' is added to the CINMS regulations to read as follows: ''Oceangoing ship means a private, commercial, government, or military vessel of 300 gross registered tons or more, not including cruise ships.''

The California Clean Coast Act definition is the same with one additional phrase at the end: ''Calling on California ports or places.'' The Sanctuary definition excludes this phrase since ships of this general description may traverse the Santa Barbara Channel TSS, and thereby the Sanctuary, without stopping in California ports or places.

h. Adopt a definition of ''cruise ship.'' The definition of ''cruise ship'' is added to the CINMS regulations as follows: ''Cruise ship means a vessel with 250 or more passenger berths for hire.''

i. Prohibit discharging or depositing any material or other matter from beyond the boundary of the Sanctuary that subsequently enters the Sanctuary and injures a Sanctuary resource or quality. ''Sanctuary resource'' is defined at 15 CFR 922.3 as ''any living or non-living resource of a National Marine Sanctuary that contributes to the conservation, recreational, ecological, historical, research, educational, or aesthetic value of the Sanctuary, including, but not limited to, the substratum of the area of the Sanctuary, other submerged features and the surrounding seabed, carbonate rock, corals and other bottom formations, coralline algae and other marine plants and algae, marine invertebrates, brine-seep biota, phytoplankton, zooplankton, fish, seabirds, sea turtles and other marine reptiles, marine mammals and historical resources.'' ''Sanctuary quality'' is defined at 15 CFR 922.3 as ''any of those ambient conditions, physical-chemical characteristics and natural processes, the maintenance of which is essential to the ecological health of the Sanctuary, including, but not limited to, water quality, sediment quality and air quality.'' This modification provides consistency with the regulatory language of other more recently designated sanctuaries, and helps to protect Sanctuary resources and qualities from negative influences originating outside the boundaries of the CINMS.

4. Clarify and update regulation on disturbing Sanctuary areas.

This rule modifies the existing prohibition against altering the seabed of the Sanctuary or constructing a structure thereon. The term ''seabed'' is replaced with ''submerged lands'' to be consistent with language used in the NMSA. In addition, this rule expands the geographic extent of this regulation from the first 2 nmi offshore to the entire area of the Sanctuary in order to ensure protection of the diverse accentuated bottom relief, varied substrate, and concomitant benthic habitats of the Sanctuary, and wording is conformed with similar regulations at more recently designated sanctuaries. Another change modifies the exception for ''bottom trawling from a commercial vessel'' to provide an exception for activities incidental and necessary to ''conduct lawful fishing activity.'' This exception encompasses other bottom-touching gear types, such as pots and traps. This change removes any uncertainty about the existing exception's applicability to such gear types.

This rule also specifies that abandoning—by which is meant leaving without intent to remove, any structure, material, or other matter on or in the submerged lands of the Sanctuary—is prohibited. This change makes the CINMS regulations consistent with regulations at more recently designated sanctuaries and helps protect the Sanctuary from, for example, debris abandoned by Sanctuary users.

5. Modify vessel approach regulation.

NOAA also modifies the vessel approach regulation so that the prohibition against vessel operation within 1 nmi of any of the Islands also applies to all vessels 300 gross registered tons or more (excluding fishing and kelp harvesting vessels). The former regulation prohibiting vessel operation within 1 nmi of any of the Islands applied only to vessels engaged in the trade of carrying cargo and those engaged in the trade of servicing offshore installations. The intent of this modification is to protect the sensitive nearshore areas off the Islands, including kelp forests, rocky reefs, and other areas, from the potential impacts of large-vessel groundings and collisions, including, but not limited to, cruise ships. NOAA modified this prohibition to more directly address its concern that large vessels put at risk sensitive nearshore areas of the Sanctuary regardless of their purpose for operating in nearshore Sanctuary waters.

6. Clarify and update regulation on disturbing historical resources.

This rule also includes a modification to the prohibition on removing or damaging any historical or cultural resource. The rule adds ''moving'' and ''possessing'' to the prohibition; replaces ''damage'' with ''injure,'' a term defined at 15 CFR 922.3; and adds ''attempting'' to move, remove, injure, or possess as a prohibition. The intent of this modification is to provide added protection to these fragile, finite, and non-renewable resources so they may be studied, and so appropriate information about them may be made available for the benefit of the public. The rule also replaces ''historical or cultural resource'' with ''Sanctuary historical resource'' to be consistent with regulatory language used at several other more recently designated national marine sanctuaries. ''Historical resource'' is defined in NMSP program-wide regulations as ''any resource possessing historical, cultural, archaeological or paleontological significance, including sites, contextual information, structures, districts, and objects significantly associated with or representative of earlier people, cultures, maritime heritage, and human activities and events. Historical resources include 'submerged cultural resources', and also include 'historical properties', as defined in the National Historic Preservation Act, as amended, and its implementing regulations, as amended.'' (15 CFR 922.3).

7. Prohibit take and possession of certain species.

This rule implements a new prohibition on take of marine mammals,

sea turtles, and seabirds, except as authorized by the MMPA, ESA, MBTA, or any regulation, as amended, promulgated under one of these acts. The intent of this regulation is to bring a special focus to protection of the diverse and vital marine mammal and seabird populations and the sea turtles of the Sanctuary. This area-specific focus is complementary to the prohibitions against taking promulgated by other resource protection agencies, especially given that other federal and state authorities must spread limited resources over much wider geographic areas. This regulation is consistent with regulations for several other more recently designated national marine sanctuaries, and provides a greater deterrent due to the higher civil penalties afforded under the NMSA than the penalties provided by the MMPA, ESA, and MBTA. Further, the prohibition covers all marine mammals, sea turtles, and seabirds within or above the Sanctuary. The Sanctuary's regulations do not apply if an activity (including fishing in a federally or state-approved fishery) that results in the take of marine mammals, sea turtles, or seabirds has been authorized under the MMPA, ESA, or MBTA or an implementing regulation. Therefore, under this rule, if NMFS or the USFWS issues a permit for, or otherwise authorizes, the take of a marine mammal, sea turtle, or seabird, such taking would not be prohibited and therefore would not require a permit from the Sanctuary Superintendent unless the activity would violate another provision of the Sanctuary's regulations.

''Take'' is defined in the NMSP program-wide regulations at 15 CFR 922.3.

The prohibition on take of marine mammals, sea turtles, and seabirds complements the regulation already prohibiting disturbing seabirds or marine mammals by flying motorized aircraft at less than 1000 feet over the waters within one nmi of any Island. That regulation provides a special focus on a specific type of activity, operation of motorized aircraft, within the particularly sensitive environments of the Sanctuary.

This rule also prohibits possessing within the Sanctuary (regardless of where taken from, moved, or removed from) any marine mammal, sea turtle, or seabird, except as authorized by the MMPA, ESA, MBTA, or any regulation, as amended, promulgated under the MMPA, ESA, or MBTA. This provision provides a greater deterrent against violations of existing laws protecting marine mammals, sea turtles, and seabirds than that offered by those other laws alone. This provision is also consistent with NOAA's regulations for other more recently designated national marine sanctuaries and enhances protection provided by the prohibition on the take of marine mammals, sea turtles, and seabirds discussed above.

8. *Prohibit damaging signs and markers.*

This rule also prohibits marking, defacing, damaging, moving, removing, or tampering with any sign, notice or placard, whether temporary or permanent, or any monument, stake, post, or other boundary marker related to the Sanctuary. This prohibition is designed to protect Sanctuary property used for purposes including demarcation, enforcement, regulatory information, education, outreach, and research. This new regulation is consistent with NOAA's regulations for other sanctuaries.

9. *Prohibit release of introduced species.*

This rule also prohibits introducing or otherwise releasing from within or into the Sanctuary an introduced species, except striped bass (*Morone saxatilis*) released during catch and release fishing activity. ''Introduced species'' is defined to mean: (1) Any species (including but not limited to any of its biological matter capable of propagation) that is non-native to the ecosystems of the Sanctuary; or (2) any organism into which altered genetic matter, or genetic matter from another species, has been transferred in order that the host organism acquires the genetic traits of the transferred genes. This prohibition is designed to help reduce the risk from introduced species, including but not limited to their seeds, eggs, spores, and other biological matter capable of propagating. The intent of the prohibition is to prevent injury to Sanctuary resources and qualities, to protect the biodiversity of the Sanctuary ecosystems, and to preserve the native functional aspects of the Sanctuary ecosystems, all of which are put at risk by introduced species. Introduced species may become a new form of predator, competitor, disturber, parasite, or disease that can have devastating effects upon ecosystems. For example, introduced species impacts on native coastal marine species of the Sanctuary could include: Replacement of a functionally similar native species through competition; reduction in abundance or elimination of an entire population of a native species, which can affect native species richness; inhibition of normal growth or increased mortality of the host and associated species; increased intra- or interspecies competition with native species; creation or alteration of original substrate and habitat; hybridization with native species; and direct or indirect toxicity (*e.g.*, toxic diatoms). Changes in species interactions can lead to disrupted nutrient cycles and altered energy flows that ripple with unpredictable results through an entire ecosystem. Exotic species may also pose threats to endangered species, and native species diversity. A number of non-native species now found in the Sanctuary region were introduced elsewhere on the west coast but have spread through accidental introductions, such as hull-fouling and ballast water discharges.

The introduced species regulation includes an exception for striped bass (*Morone saxatilis*) released during catch and release fishing activity. Striped bass were intentionally introduced in California in 1879, and in 1980 the California Department of Fish and Game initiated a striped bass hatchery program to support the striped bass sport fishery, which according to the California Department of Fish and Game is one of the most important fisheries on the Pacific Coast. The California Department of Fish and Game manages the striped bass fishery through a Striped Bass Management Conservation Plan. This provision is intended to acknowledge that striped bass are the focus of an established state-managed sport fishery and, since they consequently may be caught within the Sanctuary, allow for an exception for striped bass released during catch and release fishing activity.

10. *Regulate Motorized Personal Watercraft (MPWC).*

This rule also prohibits operating a MPWC within waters of the Sanctuary that are coextensive with the Channel Islands National Park (CINP), established by 16 U.S.C. 410(ff). The CINP includes San Miguel and Prince Islands, Santa Rosa, Santa Cruz, Anacapa and Santa Barbara Islands, including the rocks, islets, submerged lands, and waters within one nmi of each island. For the precise coordinates and a map of the CINP, refer to the FEIS. This provision mirrors an existing National Park Service ban on use of MPWC within waters of the CINP and many other units of the National Park System, and is intended to provide added deterrence for purposes of ensuring protection of the Sanctuary's sensitive nearshore marine wildlife and habitats. The CINP staff have observed an increase in use of MPWC within the park over the last several years, and park staff issue several dozen warnings per year for violation of this ban. For

consistency (including enforcement), this rule adopts the National Park Service definition of MPWC (36 CFR 1.4(a)) for the Sanctuary, which reads as follows:

''Motorized personal watercraft'' means a vessel, usually less than 16 feet in length, which uses an inboard, internal combustion engine powering a water jet pump as its primary source of propulsion. The vessel is intended to be operated by a person or persons sitting, standing or kneeling on the vessel, rather than within the confines of the hull. The length is measured from end to end over the deck excluding sheer, meaning a straight line measurement of the overall length from the foremost part of the vessel to the aftermost part of the vessel, measured parallel to the centerline. Bow sprits, bumpkins, rudders, outboard motor brackets, and similar fittings or attachments, are not included in the measurement. Length is stated in feet and inches.

MPWCs operate in a manner unique among recreational vessels and pose a threat to wildlife. Their shallow draft enables them to penetrate areas not available to conventional motorized watercraft (NPS 2000, MOCZM 2002). The high speed and maneuverability of MPWCs, along with the tendency to operate them near the shore and in a repeated fashion within a confined area, results in recurring disturbance to animals and habitats (Rodgers and Smith 1997, Snow 1989). Studies have shown that the use of MPWCs in nearshore areas can increase flushing rates, reduce nesting success of certain bird species, impact spawning fish, and reduce fishing success (Burger 1998, Snow 1989). The National Park Service (2000, 2004) identified several of these impacts along with interruption of normal activity, avoidance and displacement, loss of habitat use, interference with movement, direct mortality, interference with courtship, alteration of behavior, change in community structure, elevated noise levels, and damage to aquatic vegetation. Further, offshore marine mammals or surfacing birds may be unaware of the presence of these vehicles due to their low frequency sound; when the inability to detect the vehicles is combined with their high speed and rapid and unpredictable movements, both animals and operators are at risk (Snow 1989).

MPWC manufacturers have made efforts to reduce emissions and noise through use of more efficient four-stroke engines as well as other technology (*e.g.*, Bombardier Recreational Products, Inc. 2005a, 2005b; Personal Watercraft Industry Association 2005). However, it is not clear that such improvements have rendered MPWC-caused wildlife disturbance impacts insignificant. While industry sponsored studies indicate that MPWCs are no louder than similar motorized vessels under analogous conditions, other studies indicate that because MPWCs often travel repeatedly in the same area, continually leaving and reentering the water, they can create rapid cycles of noise that disturb humans and wildlife (MOCZM 2002). Industry improvements in noise and other emissions do not address impacts associated with the high speed, maneuverability, shallow draft, and nearshore operation of MPWC.

The area within one nmi of island shores experiences the greatest visitor use and impact to sensitive nearshore Sanctuary marine resources. The new provisions implemented through this final rule serve as an added deterrent to illegal MPWC use within the nearshore area and other waters of the Channel Islands National Park.

11. *Revise regulation on military activities.*

This rule modifies regulations stating that all activities currently (*i.e.*, at the time of designation in 1980) carried out by the Department of Defense within the Sanctuary are essential for the national defense and, therefore, not subject to the prohibitions contained within the other Sanctuary regulations. As part of this modification, the list of exempt military activities occurring within the Sanctuary is updated to include present military activities if specifically identified in the Final Environmental Impact Statement (FEIS) for this rule. In addition, the rule adds language consistent with the NMSA, stating that mitigation and restoration or replacement of Sanctuary resources and qualities is required when Department of Defense activity results in their injury, destruction, or loss. All Department of Defense activities are required to be carried out in a manner that avoids to the maximum extent practicable any adverse impacts on Sanctuary resources and qualities.

This rule also adds one exception pertaining to vessels of the Armed Forces to the two discharge/deposit regulations discussed earlier. Namely, an exception is made for discharges allowed under section 312(n) of the Federal Water Pollution Control Act. Section 312(n), which was enacted in 1996, provides for uniform national standards for discharges, other than sewage, incidental to normal operation of vessels of the Armed Forces.

12. *Revise permit regulations.*

This rule also modifies the Sanctuary's permit regulations by: (a) Augmenting and clarifying the list of activities for which the Director of NOAA's ONMS (Director)[2] may issue a permit; (b) clarifying which prohibitions are eligible for a permit from the Director for the conduct of a particular activity; (c) expanding and clarifying the criteria the Director must use in reviewing permit applications; (d) clarifying the application requirements for permits; and (e) requiring that all permittees hold the United States government harmless against claims arising from permitted activities.

The modifications clarify that the Director may issue permits for salvage activities pertaining to both abandoned shipwrecks (invoking maritime heritage resource protection concerns) and recent air or marine casualties (invoking prompt response concerns). The modifications also allow the Director to issue permits for activities that would assist Sanctuary management, but that do not fall into the categories of research, education, or salvage. For example, the Director may issue Sanctuary management permits for activities such as repairing or replacing piers that help facilitate Sanctuary operations. The updated list of otherwise prohibited activities that may be conducted pursuant to a permit is necessary given the addition of several new prohibitions and the recent addition of marine reserves and conservation area regulations, and given the need to specify those activities for which a permit may in no circumstances be granted.

The modifications to the permit regulations also strengthen and augment the criteria that the Director must consider when evaluating permit applications. The modifications now expressly indicate to prospective permit applicants what type of information they are required to include in their application. The modifications also modernize the permit regulations by expressly requiring that the permittee agree to hold the United States harmless against any claims arising out of the permitted activities.

In summary, the overall intent of the revised permit regulations is: To clarify, standardize, and make express the permit requirements and procedures, rendering them easier for permit applicants to comply with and for the Director and Sanctuary staff to implement; to ensure that permitted projects are appropriate for the Sanctuary; and to provide a mechanism for issuing permits for activities that

[2] The Director has delegated the responsibility for the review of most permit applications and the decision making for most permits to the Sanctuary Superintendents.

may further Sanctuary management but would otherwise be prohibited.

13. Make non-substantive revisions to regulations on marine reserves and conservation areas.

This rule makes non-substantive revisions to the regulations on marine reserves and conservation areas to remove some unnecessary language and to better integrate the regulations with the rest of the CINMS regulations.

IV. Response to Comments

This section provides NOAA's response to comments received between May and July 2006 on the proposed rule and during two hearings on the proposed rule and associated DEIS, and to comments received between March and May 2008 on a second proposed rule and associated supplemental DEIS (or SDEIS). NOAA received over 700 comments on the DEIS, SDEIS, and proposed rules. NOAA summarized the comments according to the content of the statement or question put forward in the letters, emails, and written and oral testimony at the public hearings on this action because many of the comments touched upon the same or similar issue and could be answered with one response.

Abandoning Matter

Abandoning Matter—Fishing Gear

1. *Comment:* The proposed prohibition on abandoning is too broad and may cause an unnecessary burden on existing lawful fishing activities by appearing to render illegal the inadvertent loss of fishing gear. The proposed regulation should clarify the specific materials and situations prohibited, or exempt fishing gear lost during lawful fishing operations—if the owner or operator attempts to recover the gear with the equipment available to them at the time of the loss.

Response: In the rule's summary of regulatory amendments, NOAA has stated that ''abandoning'' refers to ''leaving without intent to remove.'' NOAA is not providing an exception for lost fishing gear. However, NOAA would consider the efforts made by fishermen to retrieve any deployed fishing gear in determining whether the loss of fishing gear constituted the abandonment of matter on or in the submerged lands of the Sanctuary.

Abandoning Material—General

2. *Comment:* The abandoning prohibition is overly broad and could be a detriment to safety of life at sea in that the threat of penalty may cause a master to delay abandonment of his sinking vessel beyond what is prudent and which could result in unnecessary loss of life. This section of the regulations should be much more narrowly drafted to allow for a master's judgment in extremis.

Response: The regulation includes an exception for ''an activity necessary to respond to an emergency threatening life, property, or the environment.''

Abandoning Matter—Abandoned Vessels vs. Historical Resources

3. *Comment:* The proposed abandoning prohibition eliminates continuation of a historic record by making it illegal to leave historic vessels in the Sanctuary after they have sunk. NOAA should establish guidelines delineating the difference between an abandoned vessel and an historical or archaeological resource.

Response: NOAA does not automatically consider newly sunken vessels as historical resources to be protected. The extent to which removal of a sunken vessel would be required is based on several factors, including guidelines set by National Historic Preservation Act (NHPA) criteria (16 U.S.C. 470 *et seq.*) for determining historical significance.

Acoustic Impacts

Acoustic Impacts—General Action Recommendations

4. *Comment:* The FMP's Resource Protection Action Plan should include an acoustics strategy that identifies underwater noise as an issue, explains potential sources of noise (*e.g.*, seismic testing and sonar) and their effects on marine life, and explains NOAA's plans for noise evaluation and response in the Sanctuary.

Response: The FMP's Resource Protection Action Plan identifies human-induced acoustic impacts as a resource protection issue, explains potential sources of noise and their potential effects on marine life, and explains how NOAA is evaluating and responding to this issue in the Sanctuary.

5. *Comment:* Given increasing shipping traffic and its associated noise in the CINMS region, the FMP's Conservation Science Action Plan should provide strategies for tracking and/or quantifying vessel traffic through the Sanctuary and, if needed, mitigating or minimizing ship noise.

Response: NOAA has added to the FMP's Conservation Science Action Plan a new Strategy CS.8 on Automated Identification System (AIS) Vessel Tracking. This strategy explains NOAA's long-term plan for large vessel tracking within and around the Sanctuary. See also FMP Strategy CS.3 for related information on acoustic monitoring in the Sanctuary, and the FMP's Resource Protection Action Plan (Description of the Issues) for related information on addressing human-induced acoustic impacts.

6. *Comment:* CINMS should formally consider energetic discharges from human activities as pollutants in the same manner in which organic and chemical discharges are considered. Several precedents for this already exist, including California state law (the California Thermal Plan), federal law (the Clean Water Act), and international law (UN Convention on the Law of the Sea).

Response: While NOAA does not consider noise discharge as a ''pollutant,'' any impacts resulting from noise on marine mammals and other endangered species are regulated under the Marine Mammal Protection Act and the Endangered Species Act. At this time, NOAA believes these measures are sufficient to address the threat of human-induced sound on these sensitive species.

7. *Comment:* NOAA should establish a voluntary ''speed limit'' for commercial ship traffic passing through or near the Sanctuary during blue and fin whale inhabitation to reduce the noise impacts on these species.

Response: Since 2007, NOAA and the U.S. Coast Guard have issued Local Notices to Mariners containing a request that large vessels transiting the Santa Barbara Channel voluntarily reduce their speed to ten knots or less when aggregations of large cetaceans are present. NOAA and the U.S. Coast Guard may issue future notices as conditions warrant them. Although the rationale for these notices is to help reduce the risk of ship strikes on whales, ancillary benefits of reduced ship speeds generally include reduced vessel noise.

8. *Comment:* NOAA should consult with the Minerals Management Service (MMS) on future proposed seismic survey activities in the Channel and with the Navy to ascertain the likelihood of any active sonar exercises in range of the CINMS to ensure they cause minimal disruption to the migration or reproduction of Sanctuary species.

Response: Section 304(d) of the NMSA requires any federal agency to consult with the NMSP on activities that are likely to destroy, cause the loss of, or injure any Sanctuary resource (whether or not those activities are conducted within a national marine sanctuary). This would of course apply to both seismic and sonar activities.

Furthermore, regarding seismic activities within the Sanctuary, CINMS regulations prohibit exploring for, developing, or producing hydrocarbons.

Acoustic Impacts—Regulations

9. *Comment:* NOAA should create CINMS noise regulations and/or ban sonar testing to help protect Sanctuary wildlife, and/or make the enter-injure clause of the discharge regulation applicable to noise pollution.

Response: NOAA and its partners are researching underwater noise in the Sanctuary. Currently, the available site-specific acoustic data is insufficient to justify the need for more stringent regulations on underwater noise than those promulgated by NMFS pursuant to the Marine Mammal Protection Act (MMPA; 50 CFR 216.101–216.108 *et seq.*). Except in a small grandfathered lease area, CINMS regulations preclude seismic exploration for hydrocarbons within the Sanctuary, as they prohibit exploring for, developing, or producing hydrocarbons within the Sanctuary. Any activities that may exceed a certain noise threshold are subject to rigorous review under NMFS' MMPA authority, which includes mitigation measures when deemed necessary.

While NOAA is not pursuing special noise regulations for CINMS at this time, NOAA will continue to use its authority under section 304(d) of the NMSA (16 U.S.C. 1434(d)) to help protect marine mammals from the impacts of noise. Section 304(d) of the NMSA requires any federal agency to consult with the NMSP on activities that are likely to destroy, cause the loss of, or injure any Sanctuary resource. This consultation requirement requires NOAA to provide recommendations to these agencies to protect Sanctuary resources, including marine mammals. If an agency fails to follow a recommendation and its action results in injury to a Sanctuary resource, the agency must restore or replace the Sanctuary resource. In addition, if a noise-producing project is not authorized by NMFS under its MMPA authority and harms marine mammals within the Sanctuary, the CINMS's new regulation prohibiting the take of marine mammals, sea turtles, and seabirds would apply.

10. *Comment:* NOAA staff should advocate for domestic and international attention to and action on the current gaps in understanding and regulation of underwater noise.

Response: As a federal agency, under federal law NOAA staff may not advocate for legislative action. However, research and monitoring on underwater noise in the Sanctuary is shared within NOAA and as such can influence Executive Branch actions and decision-making related to this issue. NOAA staff also help raise international attention to noise impacts by participating in and sharing knowledge at conferences on this issue. For example, NOAA sponsored a symposium with the shipping industry on the topic of ship-quieting technology in 2004, and again in May 2007.

Acoustic Impacts—Research and Monitoring

11. *Comment:* The FMP should explain NOAA's plans for noise research and monitoring in the Sanctuary, which should include: Promoting research on anthropogenic noise impacts on Sanctuary resources; documenting and improving understanding of Sanctuary baseline and new acoustic conditions; identifying significant sources and levels of noise within the Sanctuary; and promoting dialogue and collaboration between the Sanctuary, the shipping industry, and other relevant regional and national agencies.

Response: Increasing research efforts, such as those recommended within the National Academies' National Research Council's recent reports on the impacts of noise on marine mammals, will assist NOAA in continuing to evaluate the agency's management responses to this issue. NOAA has revised the FMP's Conservation Science Action Plan to include details on current and potential future acoustic research and monitoring plans in the CINMS. In addition, NOAA has addressed promoting dialogue and collaboration between relevant agencies and the shipping industry in the Resource Protection Action Plan (see the Description of the Issues section on Human-induced Acoustic Impacts). NOAA's Acoustics Program, based at the NOAA Headquarters Office, is investigating all aspects of marine animal acoustic communication, hearing, and the effects of sound on behavior and hearing in protected marine species. For additional information, see *http://www.nmfs.noaa.gov/pr/acoustics/.*

12. *Comment:* The FMP's Conservation Science Action Plan should include a ''stranding strategy'' for addressing potential noise induced marine mammal stranding events. It should address: Funding, monitoring, data reporting (including from stranding, necropsies, and noise events), and public involvement.

Response: NOAA has not added a stranding strategy to the Conservation Science Action Plan. However, the Resource Protection Action Plan (Description of the Issues section on Marine Mammal Strikes) describes CINMS's role in responding to and reducing the risk of future stranding events (*e.g.*, those caused by ship strikes) in the Sanctuary. The Action Plan reflects that in 2008, CINMS, NMFS, and the U.S. Coast Guard, with input from the Sanctuary Advisory Council, developed a Prevention and Emergency Response Plan for Reducing Ship Strikes on Blue Whales and Other Large Cetaceans in the CINMS and Santa Barbara Channel. This prevention and response plan helps NOAA and the U.S. Coast Guard respond to stranding events and helps the agencies coordinate with partners authorized to assist including the Santa Barbara Museum of Natural History, and the Santa Barbara Marine Mammal Center. NMFS manages marine mammal stranding events and administers the Marine Mammal Stranding Network program. This program addresses funding for stranding teams, monitoring marine mammal stranding events, reporting on stranding causes (including those from acoustics), and managing public involvement in necropsies. In addition, NMFS administers the Marine Mammal Protection Act and Endangered Species Act, and would be responsible for acquiring information on all possible causes of stranding events. With regard to monitoring for stranding events, the Sanctuary's Aerial Monitoring and Spatial Analysis Program (SAMSAP) provides an important stranding detection capability that provides important information for estimating time and location of a large whale mortality. SAMSAP also provides details that can be used by NMFS to coordinate a stranding response, including a necropsy, if possible and appropriate, to determine the cause of death.

13. *Comment:* NOAA should incorporate into the Conservation Science Action Plan the Advisory Council acoustic report's research and monitoring recommendations.

Response: NOAA has incorporated the report by referencing it and a summary of its findings in the FMP Resource Protection Action Plan's Description of the Issues section. Additionally, a description of acoustic monitoring, which was recommended in the report, has been added to the Conservation Science Action Plan's list of monitoring activities CINMS intends to support (Strategy CS.3). NOAA has also referred to specific research and monitoring recommendations within relevant activities in strategies CS.3, and CS.8.

Aerial Monitoring

14. *Comment:* The Sanctuary Aerial Monitoring and Spatial Analysis Program (SAMSAP) program should be explicitly linked to the Conservation Science Program so that SAMSAP's capabilities can be analyzed with respect to more specific science and monitoring needs. For example, SAMSAP could provide a current spatial dataset depicting marine mammal and bird hotspots, and areas of concentrated use of large vessels, personal watercraft, squid boat lighting, sources of major acoustic emanations, etc.

Response: In the past, due to limited resources, SAMSAP has been predominantly a data collection program with only limited analyses taking place on an as-needed and time allowed basis. Since the draft management plan was released, NOAA has devoted more resources to SAMSAP and in depth analyses are taking place with both recently collected data and the full SAMSAP historical database. For example, NOAA analyzed SAMSAP vessel traffic data used in socioeconomic impact studies related to marine zoning. NOAA is also analyzing changes in visitor use patterns, and in partnership with the Scripps Institute of Oceanography is combining data from SAMSAP, acoustic monitoring, and the regional Automated Identification System (which tracks vessel traffic) to study the impacts of vessel traffic noise on large cetaceans. Given available funding and resources, SAMSAP will continue to be increasingly used as a tool to assist in implementation of the strategies in the FMP's Conservation Science Action Plan.

Aircraft

15. *Comment:* NOAA should remove the language regarding disturbing seabirds or marine mammals from the prohibition on disturbing seabirds or marine mammals via operating aircraft below 1000 ft within one nmi of the Islands, thereby prohibiting the activity itself without the enforcement challenge of proving disturbance.

Response: NOAA is currently consulting with the Federal Aviation Administration, the primary agency of the U.S. Government with authority to regulate safe and efficient use of U.S. airspace, to determine the best approach to regulating impacts of aircraft on Sanctuary resources. If removing the language in the referenced prohibition is determined to be appropriate, NOAA will revise its regulations accordingly.

16. *Comment:* NOAA should justify the one nmi limitation for the overflight disturbance regulation based on information about the location and seabird and marine mammal concentrated use areas within the Sanctuary (such as emergent rocks). If one of the purposes of limiting overflights is to protect seabirds and marine mammals, it would seem that they will be impacted beyond one nmi of the Islands and the regulation should apply to the entire Sanctuary.

Response: Some small offshore rocks beyond one nmi from San Miguel Island and Santa Rosa Island are emergent during lower periods of the tidal cycle. However, the presence of these rocks is ephemeral because most are submerged during the remainder of the tidal cycle, some are consistently awash from wave action, and others may be completely submerged during neap tide cycles when tides are relatively weak. Hence, the role of such rocks as nesting, breeding, or permanent haul out habitat is limited. Low aircraft overflights (below 1000 feet) within these more remote offshore areas is limited, and NOAA does not at this time regard these areas as needing the specific protection provided by this regulation. However, all aircraft flight is also subject to the prohibition on unauthorized take of marine mammals, sea turtles and seabirds (Prohibition 7), which applies throughout the entire Sanctuary.

Alternative Energy

17. *Comment:* NOAA should include in the FEIS a description of the Energy Policy Act of 2005.

Response: NOAA has added information about the Energy Policy Act of 2005 to the FEIS cumulative effects section, and to the FEIS discussion of federal law pertaining to offshore energy sources and mineral exploration and development.

Aquaculture

18. *Comment:* The FMP must provide clear, specific, strategic guidelines to CINMS staff to carry out resource protection responsibilities with regard to open finfish aquaculture, including consulting with prospective fish farm operators and permitting agencies, and maintaining adequate enforcement effort to ensure that offshore aquaculture activities, even if located outside Sanctuary boundaries, do not violate CINMS regulations such as the discharge prohibition's ''enter-and-injure'' clause, and the prohibition on introduction of species.

Response: The FMP does not contain guidelines dedicated to aquaculture. However, a number of management tools already in place, such as the permit process and consultation requirements, provide CINMS staff with a robust means of addressing any potential issues regarding open ocean finfish aquaculture in the Sanctuary. In addition, CINMS existing regulations prohibit, for example, discharges in the Sanctuary, and the new regulations prohibit introduced species into the Sanctuary. If offshore aquaculture activities are proposed in the Sanctuary region, NOAA's ONMS and NMFS would work closely with the California Coastal Commission, California Department of Fish and Game, and other relevant regulatory agencies on analyzing the associated potential impacts and their effects on the Sanctuary. NOAA will also use the Sanctuary Advisory Council's 2007 report and recommendations on open ocean aquaculture, in support of any future management decisions on this issue in the Sanctuary. Regarding maintaining enforcement effort, see the responses to comments 118 and 120.

19. *Comment:* NOAA should develop management strategies for addressing and mitigating potential impacts from aquaculture on the Sanctuary's marine resources. NOAA should also analyze the adverse impacts to marine resources and water quality from finfish aquaculture farms, including genetic pollution from escaped fish, the introduction and propagation of fish diseases and parasites, the discharge of nutrients, antibiotics and other chemicals, the use of anti-predation devices and the potential for space conflicts with existing commercial and recreational activities.

Response: NOAA will continue to track the wide range of research projects (and their associated results) currently underway along the west coast of the United States and elsewhere analyzing the impacts of aquaculture. NOAA would apply the results from these research efforts, as necessary and appropriate, in decisions it may make regarding any future aquaculture activities in the Sanctuary. Regarding management strategies for addressing potential impacts from aquaculture, see the response to comment 18.

Artificial Reefs

20. *Comment:* The prohibition on altering the seafloor may conflict with existing artificial reef programs if the Sanctuary is extended to the mainland coast.

Response: NOAA is not making any changes to the CINMS boundary at this time. The prohibition on altering submerged lands of the Sanctuary precludes installation of an artificial reef without a CINMS permit. Proposals to construct artificial reefs in CINMS

will be considered, as before, in accordance with the ''Policy Statement of the National Marine Sanctuary Program: Artificial Reef Permitting Guidelines.'' CINMS permit regulations would require an NMSP determination that any proposed artificial reef: (a) Furthers the understanding of Sanctuary resources and qualities; (b) furthers the educational value of the Sanctuary; (c) furthers salvage or recovery operations in or near the Sanctuary in connection with a recent air or marine casualty; (d) assists in the management of the Sanctuary; or (e) furthers salvage or recovery operations in connection with an abandoned shipwreck in the Sanctuary. For more information on the procedures and issuance criteria for Sanctuary permits, see 15 CFR part 922.

21. *Comment:* NOAA should prohibit rigs-to-reefs projects within Sanctuary waters, and should consult with project applicants and permitting agencies before such projects are allowed outside Sanctuary boundaries if they have any potential to negatively affect Sanctuary resources.

Response: Because there are both a national policy guiding the consideration of artificial reefs and other CINMS regulations relevant to artificial reefs in the Sanctuary (see the response to comment 20), NOAA is not specifically addressing rigs-to-reefs projects in the CINMS regulations. In addition, there are currently no oil platforms in the Sanctuary. If in the future an applicant proposes a rigs-to-reefs project outside the Sanctuary, CINMS staff would consult with all relevant permitting agencies as part of the process to best understand any potential impacts to the Sanctuary from such a proposal. Federal agency actions, including private activities authorized by licenses, leases, or permits, that are likely to destroy, cause the loss of, or injure a Sanctuary resource are subject to consultation with NOAA per section 304(d) of the NMSA.

22. *Comment:* NOAA should provide an exception to the abandoning prohibition for materials intended to be used for artificial reefs, especially if subsequent Sanctuary boundary changes cause an existing platform(s) on the Pacific OCS to be included within the Sanctuary.

Response: As explained in the response to comment 20, NOAA has developed Artificial Reef Permitting Guidelines. At this time, NOAA is not adding a reef materials exception to the regulation on abandoning matter in the Sanctuary because NOAA prefers to evaluate the efficacy of artificial reef proposals on a case-by-case basis rather than to provide a blanket exception that would allow any artificial reef project anywhere within the Sanctuary.

Boundary Evaluation

23. *Comment:* The FMP/FEIS should be updated to note that the Biogeographic Assessment has been completed, and should also explain that the assessment ranked boundary concept 1 first for ecological significance, and boundary concept 2 second.

Response: Text on the completion of the Sanctuary's biogeographic assessment has been added to the FMP's Boundary Evaluation Action Plan, the FMP's Appendix D, and the Introduction of the FEIS. For details about the findings of the assessment, including details about the various boundary concepts and their rankings, see *http://ccma.nos.noaa.gov/products/biogeography/cinms/*.

24. *Comment:* Boundary Concept 1 best meets the goals and objectives of the National Marine Sanctuaries Act and the CINMS, is the only one that truly meets the ecosystem protection goals of the Act, provides clear and effective management, facilitates increased public participation and support for the Sanctuary, provides more meaningful education and research about marine resources and habitats, ensures greater protection from harmful impacts, provides a coastal interface that is part of the Channel Islands ecosystem, provides additional protection from offshore oil and gas development, and will result in partnerships that will increase marine resource and water quality protection.

Response: As stated in the FMP's Appendix D (''Supporting Information on Boundary Evaluation''), NOAA is not considering any changes to the CINMS boundary as part of this management plan review. However, NOAA will further analyze the boundary concepts in a separate process sometime in the future. This process will include public review and comment in accordance with legal requirements.

25. *Comment:* NOAA should begin the environmental review process for boundary change alternatives now or as soon as the management plan process is finalized.

Response: As indicated in the FMP's Boundary Evaluation Action Plan, NOAA will further analyze the boundary concepts in a future environmental review process.

26. *Comment:* NOAA might garner a lot more support for Sanctuary boundary expansion by proposing to limit oil and gas activities while supporting pre-existing, sustainable, commercial and recreational uses, as opposed to re-allocating the natural resources within the Sanctuary.

Response: When NOAA considers Sanctuary boundary expansion, it will evaluate a wide variety of potential threats to and uses of Sanctuary resources, as well as various management measures that best address these issues. When designating new or expanding existing sanctuaries, NOAA will evaluate oil and gas development, as well as other commercial and recreational uses. NOAA will consider the impacts of these uses on Sanctuary resources, as well as the impacts of CINMS management measures on users.

27. *Comment:* During the future consideration of CINMS boundary expansion, NOAA should allow for enough public review of this action to encompass two meetings of the Pacific Fishery Management Council (PFMC) and allow for full PFMC deliberation and comment development.

Response: NOAA is aware of the PFMC decision-making process and will consider providing a public review period that encompasses two PFMC meetings.

28. *Comment:* NOAA should address the fact that industrialized uses could have the prospect of limiting boundary expansion.

Response: NOAA believes it is premature to include in the FMP and FEIS conclusive statements about how CINMS boundary alternatives and industrialized uses may relate to one another. NOAA will analyze the relationship between industrialized uses and Sanctuary boundary alternatives in a future environmental review process.

29. *Comment:* NOAA should indicate the number of comments received that were not in favor of boundary expansion.

Response: NOAA has revised text in the FMP to indicate the number of scoping comments received that did not support an expanded Sanctuary boundary.

30. *Comment:* The NCCOS Biogeographic study should not be described as providing any new information about marine species because it using existing information.

Response: Although new data was not collected for the NCCOS biogeographic study, it integrated data sets from various sources and provided new statistical and spatial analyses that characterize biological and oceanographic patterns of the Channel Islands marine region.

31. *Comment:* If incorporation of biodiversity and protection of entire ecosystems is a goal in boundary reformulation, then the boundaries should be extended because they do not

correspond well to existing marine ecosystem extents.

Response: Once NOAA determines that an evaluation of the CINMS boundary is appropriate, several factors will be incorporated into the associated environmental analysis, including the spatial extent of regional ecosystems and areas of complex biodiversity.

Chumash

Chumash—General

32. *Comment:* NOAA should add to the management plan information about the spirituality and spiritual energy of the Channel Islands, and the Chumash connection to surrounding waters.

Response: NOAA has added text to the FMP Human Setting section, the FMP Maritime Heritage Resources Action Plan, and the FEIS Affected Environment/Maritime Heritage Resources section to emphasize the spiritual significance of the Channel Islands to Chumash people.

33. *Comment:* Members of the Chumash community, not NOAA, should initiate any joint paddling excursions directly with the Makah Nation.

Response: NOAA has revised the FMP's Maritime Heritage Action Plan to clarify that NOAA's intent is not to initiate paddling excursions, but rather to support such excursions initiated by Chumash and other partners.

34. *Comment:* Information about submerged Chumash cultural resources should be referenced to and provided by Chumash scholars and Chumash people.

Response: In the FMP and FEIS, NOAA has upheld the standard of using the best available scientific information, including the best available anthropological and archeological information regarding submerged Chumash cultural resources. CINMS staff consulted with a Chumash community member and expert to improve referencing and ensure accuracy.

35. *Comment:* It is important that DMP p. 28 states that, ''Archaeologists suggest the Sanctuary may have once been the site of Chumash villages * * *,'' because there are sites now submerged due to changing sea level.

Response: Comment noted.

36. *Comment:* The management plan should explain how Chumash people are involved in monitoring artifacts, and what federal, state and local regulations pertain to Chumash monitoring of artifacts.

Response: NOAA has added an activity to FMP Strategy MH.4 that describes how the NOAA will consult with the Sanctuary Advisory Council and ask for the assistance of its Chumash Community Working Group in clarifying existing requirements and discussing best practices regarding protection and handling of Chumash artifacts.

37. *Comment:* NOAA should increase funding and planned efforts for Strategy MHR.6 on Promoting Public Education of Chumash Native American History.

Response: NOAA will continue to contribute staff time and vessel support toward the implementation of this Strategy (now referred to as MH.6), and will continue to support the Sanctuary Advisory Council's Chumash Community Working Group. NOAA will allocate additional resources as funding allows.

38. *Comment:* NOAA should hire Chumash staff to properly implement the Maritime Heritage Resources Action Plan.

Response: Should NOAA add any new staff positions at CINMS, such positions must be open to all qualified individuals. In addition, NOAA encourages individuals from all local communities to participate in the Sanctuary's Maritime Heritage Resources Volunteer Program (see strategy MH.2).

39. *Comment:* NOAA should establish an internship for Chumash high school and/or college students.

Response: NOAA initiated a Chumash internship at the Sanctuary in 2008. NOAA values this internship for improving coordination and partnership building between CINMS and the Chumash community, and as a means to introduce Chumash students to marine conservation education and resource protection professions. NOAA looks forward to continuing the internship as resources allow.

40. *Comment:* NOAA should separate shipwreck information from Chumash cultural information in the Maritime Heritage Resources Action Plan.

Response: The majority of the strategies contained in this action plan bear relevance to researching, protecting, and conducting outreach and education not only on shipwrecks, but also on Chumash cultural sites and artifacts. However, given that NOAA regards Chumash culture, past and present, as a special part of the Sanctuary's maritime heritage, the FMP's planned activities to support education about Chumash heritage are contained in a separate strategy.

41. *Comment:* A cave in Oregon has been recently determined to house the oldest human remains found in North America; therefore the reference to Santa Rosa Island as such should be revised.

Response: NOAA has revised FMP and FEIS text accordingly.

Chumash—Inclusion Across Tribal, Political, and Social Groupings

42. *Comment:* The documents should reflect that there are many Chumash tribal, political and social groupings. The Chumash Maritime Association should not be the only Chumash group considered in DMP Strategy MHR.6 activities on Promoting Public Education of Chumash Native American History.

Response: NOAA has added information about various Chumash bands, tribal, political, and social groupings to the FMP Human Setting section, and elsewhere within the FMP/FEIS documents. NOAA has listed the Sanctuary Advisory Council's Chumash Community Working Group as the Chumash community partner in Strategy MH.6 activities. The Chumash Community Working Group is open to membership from the entire Chumash community, and its purpose is to advise the Sanctuary Advisory Council, and in turn the Sanctuary, regarding matters related to the Chumash community. NOAA has also replaced the detailed activity and program ideas within MH.6 with a new activity that outlines a plan to work with the Chumash community (via the Chumash Community Working Group) to identify mutual objectives for supporting public education about Chumash heritage.

43. *Comment:* NOAA should explore a government-to-government relationship with the Chumash.

Response: As the Santa Ynez Band of Chumash Indians is a federally recognized tribe, any interaction between the Santa Ynez Band and NOAA occurs in the context of a relationship between two government entities, and within the limits of the Santa Ynez Band's and the Sanctuary's respective jurisdictions and authorities.

Chumash—Language Revisions

44. *Comment:* Portions of the Draft Management Plan should be rewritten, especially under the Maritime Heritage Resources Action Plan, because the text contains many examples of ''word and meaning biases and conflicts.'' NOAA should work collaboratively with the Chumash before developing the final versions of the documents.

Response: Although the Sanctuary Advisory Council's Chumash Community Working Group was not available for meetings during the time the final text was being prepared, CINMS staff consulted with a Chumash community member and expert and have worked to fully respond to the

Chumash community comments received. NOAA looks forward to continuing to partner with the Chumash community on implementation of activities described within the FMP.

45. *Comment:* The Draft Management Plan contains several examples of culturally biased language creating the perception of diminished Native Chumash history, presence, participation and responsibility, and some of the language conveys a patriarchal nature of the relationship between the NOAA and the wider Chumash community. It brings an otherwise unaware reader to the conclusion that the Sanctuary is in the role of a necessary savior of native Chumash traditions and teachings.

Response: Text in the DMP was crafted to indicate that NOAA's role will be one of assisting, supporting, and helping in Chumash efforts aimed at cultural revitalization that also align with the mission of the CINMS. NOAA staff have consulted with a Chumash community member and expert and have worked to fully respond to the Chumash community comments received, including by clarifying CINMS's intended role as a supporter of Chumash initiated efforts in supporting public awareness and understanding of Chumash heritage. NOAA looks forward to continuing to partner with the Chumash community on implementation of activities described within the FMP.

46. *Comment:* A reference to educating Chumash community members on such topics as respectful gathering skills reflects a sense of arrogance and difference in world view. No matter who NOAA partners with, it cannot teach me to be respectful.

Response: Text in the DMP (strategy MHR.6, activity 3) indicated that the CINMS role in this activity would be to help the Chumash Maritime Association and Chumash Community Working Group provide education and outreach opportunities for the larger regional community regarding Chumash and environmental issues. The text also indicated that this program would be designed primarily for Chumash people to educate their fellow Chumash and others about Chumash heritage. However, in an effort to ensure broader Chumash community input NOAA has replaced this specific activity in FMP strategy MH.6 with activities that now describe a process for working together to identify mutual education and outreach objectives.

47. *Comment:* NOAA should revise text that refers to ''descendents of'' Chumash, since such people identify themselves as Chumash, not descendents.

Response: NOAA has replaced references to ''descendants of Chumash'' with ''Chumash.''

48. *Comment:* The DMP's description (at Part II–C, The Human Setting) of the importance of the Channel Islands and surrounding waters to humans for thousands of years is confusing and unclear.

Response: NOAA has revised this text within the FMP's section II-C. See also the response to comment 44 for information on NOAA's efforts to develop Chumash related text.

49. *Comment:* NOAA should add information about the forced relocation of Island Chumash people.

Response: NOAA has added information to the FMP Human Setting section, the Maritime Heritage Resources Action Plan's Description of the Issues section, and the FEIS Affected Environment/Maritime Heritage Resources section about forced relocation of island Chumash to the mainland. See also the response to comment 44 for information on NOAA's efforts to develop Chumash related text.

50. *Comment:* The MHR Action Plan refers to ''Native American Artifacts,'' but the artifacts are specific to the Chumash people.

Response: NOAA has changed the text referring specifically to Native American artifacts found in the Channel Islands to refer to such artifacts as Chumash Native American artifacts.

51. *Comment:* Text about Juan Rodriguez Cabrillo's voyage of discovery (1542–1543) improperly suggests that Cabrillo ''discovered'' the already inhabited Channel Islands.

Response: Although the text did not state that Cabrillo discovered the Channel Islands, NOAA recognizes that the reference to Cabrillo's ''voyage of discovery'' could be construed to mean this, and as such NOAA has revised the text accordingly.

52. *Comment:* NOAA should revise text that refers to Chumash people in the past tense, because there has been no discontinuation of the Chumash people. NOAA should also revise Strategy MHR.6 title, ''Promoting Public Education of Chumash Native American History,'' by removing the word ''history.''

Response: NOAA made a directed effort to refer to contemporary Chumash in the DMP and DEIS, and to ensure that there are no improper references to Chumash people in the past tense within the FMP and FEIS. See also the response to comment 44 for information on NOAA's efforts to develop Chumash related text. Regarding the title of Strategy MH.6, NOAA has changed the strategy title and text, which now describe the Sanctuary's efforts to support public education of Chumash Native American maritime heritage.

Civil Penalties

53. *Comment:* The NMSP is positioning itself for growth in any way that it can, including by gaining the ability to assess new civil penalties. Current law prohibiting certain activities does not provide the potential of financial benefit for the CINMS.

Response: NOAA has maintained the authority to assess civil penalties for violations of CINMS regulations since those regulations took effect in the early 1980s. Congress defines the parameters of civil penalties during the authorization and subsequent reauthorization of the NMSA. The actual penalties levied for violations vary in proportion to the severity of the incident and other case-specific factors. NOAA is issuing this final rule to provide NOAA enforcement officers and enforcement partners with enhanced regulatory tools designed to improve protection of Sanctuary resources.

Designation TERMS

54. *Comment:* NOAA should not make the proposed changes to the Sanctuary's designation document, because they are unnecessary and NOAA has not followed the procedures required for granting CINMS new regulatory authority.

Response: In accordance with section 304(a)(4) of the NMSA (16 U.S.C. 1434(a)(4)), the terms of designation of a sanctuary include: (1) The geographic area included within the sanctuary; (2) the characteristics of the area that give it conservation, recreational, ecological, historical, research, educational, or esthetic value; and (3) the types of activities that will be subject to regulation by the Secretary to protect those characteristics. Under the National Marine Sanctuaries Act, a sanctuary's terms of designation may only be modified by following the same procedures by which the sanctuary was designated. NOAA has followed this process to modify the CINMS terms of designation, including the publication of a draft environmental impact statement, proposed regulations, and draft terms of designation. NOAA also explained why the proposed changes are necessary and analyzed each change thoroughly in the EIS.

55. *Comment:* NOAA's ability to protect Sanctuary resources is overly limited by the CINMS Designation Document. Identifying and proposing regulations to protect Sanctuary

resources, including by extending the CINMS scope of authority is required to fulfill the duty Congress assigned to the National Marine Sanctuary Program.

Response: National marine sanctuary terms of designation typically express the types of activities subject to sanctuary regulation in general terms. Recognizing that environmental conditions in a sanctuary change over time, this is necessary to allow NOAA to make appropriate modifications to existing regulations or to regulate additional activities that are impacting or may impact sanctuary resources (*i.e.*, to allow for adaptive management). NOAA is revising the CINMS terms of designation as necessary to provide the authority to implement its revised proposed regulations.

Discharge

Discharge—Bilge Water

56. *Comment:* NOAA should include an explicit ban on dumping oily bilge water (treated or not).

Response: Although NOAA provides certain exceptions to the CINMS discharge regulation, the discharge of oily bilge water is prohibited by existing regulations and is also prohibited under the new regulations. See the FEIS for additional information on and revisions to the discharge regulation.

Discharge—Chumming

57. *Comment:* NOAA should clarify that the discharge regulation allows for the common practice of filleting fish during the trip back to port.

Response: NOAA considers tossing scraps overboard from filleting fish caught in the Sanctuary during the trip back to port to be part of the exception for fish, fish parts, or chumming materials (bait).

58. *Comment:* Several commenters expressed support for the proposed exception for fish, fish parts, or chumming materials (bait) to the CINMS discharge regulation.

Response: Comment noted.

59. *Comment:* Commenter is concerned about compliance with the discharge regulation (*e.g.*, feeding wildlife food scraps).

Response: In an effort to increase compliance with CINMS regulations, NOAA will use an educational approach to raise awareness of the regulation and the problems associated with feeding wildlife. An educational approach to the issue can also be implemented through the Public Awareness and Understanding Action Plan strategy AU.3 (Team OCEAN) activities, including those pertaining to ocean etiquette. See also the response to comment 120 for an explanation of how Sanctuary regulations are enforced.

60. *Comment:* The exception to the enter-and-injure regulation as it relates to discharge of fish and fish parts and chumming materials is unnecessary, and could potentially undermine the effect, perception, and credibility of this otherwise sound and necessary measure.

Response: NOAA is not considering removing the exception to the CINMS discharge regulation for fish, fish parts, or chumming material (bait) used in or resulting from lawful fishing activity beyond the boundary of the Sanctuary. NOAA believes that such activities do not currently pose a threat to Sanctuary resources; if in the future such activities were to harm Sanctuary resources, then NOAA would re-evaluate the scope of this exception.

Discharge—Enter/Injure

61. *Comment:* A number of commenters expressed support for the proposed prohibition on discharging or depositing from beyond the boundary of the Sanctuary any material or other matter that subsequently enters the Sanctuary and injures a Sanctuary resource or quality.

Response: Comments noted.

62. *Comment:* The proposed prohibition on discharging or depositing from beyond the boundary of the Sanctuary is problematic because it enables the Sanctuary to regulate activities outside its jurisdiction; is an unwarranted and improper extension of the Sanctuary boundaries; the term ''injury'' is not defined, thus inviting numerous interpretations and the potential for litigation; and the process by which injury would be determined is not described.

Response: In order for a violation to occur of the regulation prohibiting discharge or deposit from beyond the Sanctuary, the matter that is discharged or deposited from beyond the Sanctuary must also injure a Sanctuary resource or quality, except for the exceptions listed in the regulations. Thus, operations and activities taking place beyond the Sanctuary are only subject to this regulation if the discharge or deposit of the matter is shown to injure a Sanctuary resource or quality within the Sanctuary, and this regulation is not an extension of the Sanctuary's boundary.

Injure, as defined at 15 CFR 922.3, means to change adversely, either in the short or long term, a chemical, biological or physical attribute of, or the viability of. This includes, but is not limited to, to cause the loss of or destroy.

Discharge—General

63. *Comment:* NOAA should apply heightened restrictions on polluting vessels, including large vessels, watercraft and cruise ships, in the Santa Barbara Channel, or tighten the exceptions to the discharge and deposit prohibition with the goal of better protecting Sanctuary waters from pollution.

Response: NOAA's revised Sanctuary regulations strengthen protections against pollution from vessels by clarifying that discharges allowed from marine sanitation devices apply only to Type I and Type II marine sanitation devices, and by limiting graywater and treated sewage exceptions to apply only to vessels less than 300 gross registered tons (GRT), and oceangoing ships (not including cruise ships) without sufficient holding tank capacity to hold graywater or sewage while within the CINMS.

64. *Comment:* To best protect Sanctuary resources, the new CINMS regulations should ban dumping hazardous waste into the Sanctuary.

Response: CINMS regulations prohibit discharging or depositing from within or into the Sanctuary any material or other matter, with a list of exceptions. Discharging or depositing any material or other matter that is not included in the list of exceptions, including hazardous waste, is prohibited.

Discharge—Meals

65. *Comment:* Several commenters expressed support for NOAA's proposal to prohibit discharging or depositing from within or into the Sanctuary meals on board vessels.

Response: Comments noted.

Discharge—Sewage/Graywater

66. *Comment:* The discharge and deposit regulation requires that vessel operators must lock all marine sanitation devices in a manner that prevents discharge of untreated sewage, without defining what is meant by ''lock.''

Response: Locking means securing the device such that removal of a locking mechanism (*e.g.*, padlock, combination lock, or cable tie) is required to enable the system to discharge raw sewage overboard. In the case of a Y valve that toggles toilet bowl discharge between a treatment system/holding tank and an overboard outlet, the valve handle would need to be in the closed position for overboard discharge and locked to prevent inadvertent and unopposed opening of the valve.

67. *Comment:* A number of commenters indicated that the proposed

discharge and deposit regulation does not provide the same level of protection as California Clean Coast Act.

Response: NOAA revised the proposed CINMS discharge/deposit regulation to prohibit the discharge of sewage from all vessels 300 GRT or more, and the discharge of graywater from vessels 300 GRT or more, except for oceangoing ships without sufficient holding tank capacity for graywater. This is consistent with the Clean Coast Act. These regulatory changes were analyzed in a Supplemental EIS (March 2008).

68. *Comment:* A number of commenters, including the U.S. EPA and the California State Water Resources Control Board, expressed support for the revised proposed discharge regulation as analyzed in the SDEIS.

Response: Comment noted.

69. *Comment:* One commenter supported CINMS for not providing a sewage discharge exemption for ships greater than 300 GRT, as has been proposed by the Northern California sanctuaries, but objected to the revised proposed discharge regulation exceptions for graywater and treated sewage from vessels less than 300 GRT, and graywater from oceangoing ships without sufficient holding tank capacity to hold graywater within the Sanctuary.

Response: NOAA acknowledges support for the revised proposed discharge/deposit regulation as analyzed in the SDEIS; however, NOAA has concluded that an exception for treated sewage discharge/deposit from oceangoing ships without sufficient holding tank capacity (excluding cruise ships) is warranted at this time. See the response to comment 72 for more information. CINMS is maintaining the treated sewage exception for vessels less than 300 GRT. The rationale for the treated sewage exceptions is provided in the response to comment 70. The exception for oceangoing ships without sufficient holding tank capacity to hold graywater while within the Sanctuary is implemented because, unlike cruise ships and newer oceangoing ships, some older oceangoing ships are designed without the ability to retain graywater, and, as such, must discharge graywater directly as it is produced. As explained in FEIS section 4, graywater discharge from small vessels, and from oceangoing ships without sufficient holding tank capacity to hold graywater while within the Sanctuary, is anticipated to have a less than significant adverse impact on the Sanctuary's physical, biological, and esthetic resources.

70. *Comment:* NOAA should phase-in a total wastewater discharge ban for all ocean-going vessels in CINMS.

Response: NOAA is not planning to phase in a total wastewater discharge ban for all oceangoing vessels in the Sanctuary at this time because available data do not suggest that the excepted sewage and graywater discharges within the Sanctuary pose an unacceptable risk to Sanctuary resources and qualities. Should information to the contrary become available, NOAA may consider further regulation.

71. *Comment:* Regulations applying to large vessels should also apply to vessels servicing those larger vessels (e.g., barges that may be used to transfer sewage from an anchored vessel to outside of the 3-mile limit).

Response: The regulations prohibit discharging from within or into the Sanctuary sewage (treated and untreated) and graywater from vessels 300 GRT or more (unless the vessel is an oceangoing ship without sufficient holding tank capacity—this does not apply to cruise ships). NOAA interprets this regulation to prohibit the discharge of such sewage or graywater even if the sewage or graywater were transferred to a second vessel, regardless of the second vessel's size. Furthermore, transferring sewage from an anchored large vessel seems implausible since vessels 300 GRT or more are not known to anchor within the Sanctuary.

72. *Comment:* The proposed revisions of the Sanctuary's discharge prohibition should be consistent with the California Clean Coast Act and include the exception for ocean going vessels without sufficient holding tank capacity to hold treated blackwater (sewage) while within the Sanctuary.

Response: To be consistent with the California Clean Coast Act, as well as with regulations for the Monterey Bay, Cordell Bank, and Gulf of the Farallones national marine sanctuaries, NOAA is providing an exception for treated sewage discharges from oceangoing ships that do not have sufficient holding tank capacity while within the CINMS.

73. *Comment:* Adequate education on the proposed discharge restrictions will ensure that oceangoing ships retain all discharges to the greatest extent possible within the Sanctuary.

Response: Outreach and education to the shipping industry about the Sanctuary's revised regulations is important, and NOAA will apply educational resources toward that purpose, including outreach to the Pacific Merchant Shipping Association.

74. *Comment:* The management plan fails to recognize or provide an incentive for the use and further development of advanced wastewater treatment systems currently installed on cruise ships, and instead, encourages ships to construct and utilize large holding tanks and discharge elsewhere. The targeting of cruise ships and ban on discharges promotes older, cheaper, less advanced technology and the use of holding tanks. The proposed discharge regulations amount to a wholesale ban on discharges creating a disincentive to further research, development and installation of systems that produce clean and scientifically acceptable effluent. If discharges are harmful, transferring them to another location would simply be transferring the problem.

Response: The management plan recognizes the use of advanced wastewater treatment systems by cruise ships. The SDEIS and FEIS both acknowledge the use of these systems and their ability to dramatically improve the quality of effluent discharged in Alaska. Currently, however, advanced wastewater treatment systems on cruise ships do not always function properly and even when they do, they do not always effectively remove all contaminants. NOAA encourages the development of new technologies to address these issues.

Similarly, the management plan does not encourage or promote retrenchment to older, cheaper, less advanced technology. The regulations prohibit cruise ships from discharging sewage and graywater from within or into a particular area afforded special protection due to its nationally significant resources. NOAA believes that transferring discharges outside of the Sanctuary is an appropriate resource protection measure.

75. *Comment:* There is no credible reason to ban cruise ship discharges from Type II MSDs and advanced wastewater treatment systems, and such discharges should be allowed in general, or when discharged while the vessel is moving at or above six knots. Cruise ship Type II MSDs meet or exceed U.S. Coast Guard standards and pose little or no threat to the environment. The revised proposed discharge regulation assumes that any sewage and gray water discharges, no matter the quality, are likely to have adverse environmental impacts on the receiving water and ambient air based on their sheer volume. NOAA should consult with the EPA and Alaska Department of Environmental Conservation since they have done an exceptional amount of work regarding cruise ship effluent discharges.

Response: NOAA is not aware of any EPA or other reports showing that treated sewage discharges from cruise ships would not pose any discernable effect within the Sanctuary. As discussed in the SDEIS (p. 22), it is important to note that many dilution studies only consider effluent from properly functioning MSDs, which is not necessarily the condition of MSDs on all or most vessels. The revised regulation addresses NOAA's concerns about failure of conventional MSDs on large vessels to adequately treat sewage waste streams, and lack of monitoring of those waste streams.

Regarding use of Coast Guard approved Type II MSDs, Coast Guard standards for MSDs pertain to the design and construction of MSDs, and procedures for certifying MSDs prior to sale, introduction or delivery into interstate commerce, or import into the United States for sale or resale. The Coast Guard does not test the effluent from certified MSDs once installed onboard a vessel (except in Alaska). Simply having a Coast Guard approved MSD on board a ship does not guarantee that a ship's sewage discharges meet EPA discharge requirements, as demonstrated by cruise ship sampling data in Alaska prior to institution of more stringent discharge standards, monitoring, inspection, and reporting requirements there.

The SDEIS and FEIS analysis of the potential impacts of cruise ship discharges is based on both the quality and volume of sewage and graywater discharges. Even when sewage and graywater discharges meet MSD Type II standards for fecal coliform and total suspended solids, there are other qualities of sewage and graywater discharges that may be harmful, such as chemicals used to treat sewage and graywater, and high nutrient levels, especially when discharged in large volumes. As noted in the SDEIS and FEIS, results of cruise ship graywater sampling in Alaska indicate that in the absence of water quality standards and monitoring, graywater is similar to sewage in terms of fecal coliform and total suspended solids. The SDEIS and FEIS do not analyze cruise ship sewage and graywater discharge impacts on ambient air.

Regarding cruise ships that transit Alaska, and that use advanced wastewater treatment systems, see the response to comment 76.

76. *Comment:* Rather than a ban, NOAA should consider drafting regulations that mirror requirements in other jurisdictions, such as Alaska, which permit sewage and gray water discharges at levels scientifically acceptable through discharge criteria.

Response: As stated in the SDEIS and FEIS, the results of cruise ship blackwater samples taken in Alaska indicate that blackwater from vessels without advanced treatment systems (and not subject to mandatory monitoring, inspection, and reporting) may contain levels of fecal coliform and total suspended solids that exceed federal standards for MSDs, as well as a variety of other pollutants. Unlike Alaska, NOAA is not planning on instituting a CINMS cruise ship sewage and graywater discharge monitoring, inspection, and reporting program. Effluent monitoring would be cost prohibitive and infeasible, particularly for vessels underway (large vessels do not customarily stop in the Sanctuary). Additionally, ship discharge audits often reveal that a discharge occurred but do not contain information on contaminant levels. Currently, advanced waste water treatment systems on cruise ships do not always function properly and even when they do, they do not always effectively remove all contaminants. Therefore NOAA believes that prohibiting cruise ship sewage and graywater discharges is the most effective and enforceable regulation. The SDEIS and FEIS both acknowledge the use of advanced wastewater treatment systems and their ability to improve the quality of effluent discharged in Alaska. However, the program adopted in Alaska is a complex arrangement requiring issuance of a permit, prior demonstration that the ships can meet water quality standards based on independent contractor evaluation, environmental compliance fees, wastewater sampling and testing protocols, record keeping and reporting protocols, on-board observers, and a tax per passenger to fund the administration of the program. Such a program is inherently difficult to monitor and enforce and the NMSP has no mechanism in place for recouping the necessary funds needed to administer it. Also, the EPA studies indicate that although advanced wastewater treatment systems remove most of the priority pollutants of concern they do not adequately reduce discharge of ammonia and metals. For these reasons, the CINMS regulations prohibit discharges from advanced wastewater treatment systems. Cruise ships have sufficient holding tank capacity to hold their discharge as they transit the Sanctuary.

77. *Comment:* CINMS should not implement new sewage discharge regulations for small vessels because (1) existing laws prohibit the discharge of untreated sewage from small vessels within three nautical miles of shore; (2) existing requirements should be better enforced instead of adding new requirements; (3) no significant water quality issues have been noted for discharges by vessels under 150 GRT with certified MSDs Type I, II, or III; (4) requiring untreated sewage to be discharged further offshore would turn ''good guys'' into ''bad guys''; (5) using the Coast Guard regulations as the standard for sewage discharges from vessels less than 300 GRT would facilitate Channel Islands National Park operations (i.e., kelp forest monitoring, submerged cultural resources monitoring); (6) Coast Guard regulations are easier to enforce since most boaters are familiar with them; (7) prohibiting untreated sewage discharge within the entire Sanctuary would present a trade-off between having untreated sewage discharged further from shore and environmental impacts such as pollution costs (including from fuel production and transportation) and energy waste from the fuel burned to get there; and (8) a requirement to discharge untreated sewage further offshore presents time and fuel costs to boaters.

Response: NOAA recognizes that other federal regulations prohibit the discharge of untreated sewage within three nmi from shore; however, CINMS regulations have prohibited the discharge of untreated sewage within the entire Sanctuary since 1981 (the FEIS clarifies this existing regulation). NOAA is concerned about the pathogens, nutrients, and esthetic impacts that untreated sewage could introduce if discharged within the Sanctuary. To date, untreated sewage discharges have not been definitively linked to significant water quality problems in the Sanctuary; however, this rule will ensure that such problems do not occur in the future.

CINMS partners closely with Channel Islands National Park (CINP) on marine operations including research, monitoring, and enforcement. Based on NOAA's analysis of Park and CINMS vessel operations, NOAA does not expect the clarifications to the sewage discharge regulation to significantly impede Park operations.

Enforcement of regulations, including discharge regulations, is important to ensure their effectiveness. NOAA intends to consider enforcement needs during the development of the Sanctuary's water quality protection program (see FMP strategy WQ.2). Additional outreach and education regarding Sanctuary discharge regulations is warranted, and NOAA intends to work with the Coast Guard,

CINP, and other key agencies to develop effective outreach tools.

NOAA believes all boaters can reasonably adapt to comply with this regulation and practice clean boating within the Sanctuary, as was the case when similar or more stringent regulations were adopted in other large areas of U.S. waters (e.g., the Great Lakes, state marine waters in the Florida Keys, and Chesapeake Bay). With proper trip planning, necessary equipment and maintenance, and attention to sewage holding capacity and needs, NOAA expects that boaters can take steps to avoid special trips beyond the Sanctuary's six nmi boundary solely to discharge sewage (after which they would continue boating within the Sanctuary). For example, there are compact commode and portable sewage storage systems widely available on the market.

78. *Comment:* NOAA should prohibit sewage sludge from large vessels because it is produced in large quantities by cruise ships and included in the California Clean Coast Act's prohibitions.

Response: Sewage sludge discharges/deposits are prohibited throughout the Sanctuary.

79. *Comment:* CINMS should revise the discharge regulation to mirror existing law pertaining to vessel sewage and graywater discharges and fully prohibit graywater, sewage (untreated and treated) and sewage sludge discharges from cruise ships and other large oceangoing vessels throughout the Sanctuary.

Response: Regarding mirroring existing laws on vessel sewage and graywater discharges, see the response to comment 67. The revised discharge and deposit regulation now prohibits graywater discharges from vessels 300 GRT or more (except oceangoing ships without sufficient holding tank capacity to hold graywater while within the Sanctuary); it also prohibits treated sewage discharges from all vessels 300 GRT or more throughout the Sanctuary (except oceangoing ships without sufficient holding tank capacity to hold sewage while within the Sanctuary), and prohibits untreated sewage from all vessels within the Sanctuary. The Sanctuary's discharge regulation does not provide an exception for sewage sludge discharges.

80. *Comment:* The Sanctuary should not exempt military vessels from the discharge and deposit prohibition, as they are included in the California Clean Coast Act's sewage and sewage sludge prohibitions.

Response: NOAA believes the DOD discharge requirements under CWA section 312(n) are sufficient to protect Sanctuary resources.

81. *Comment:* NOAA should delete the discharge regulation's graywater exception.

Response: NOAA believes there is no need to prohibit graywater discharges from vessels less than 300 GRT within the Sanctuary at this time. However, Sanctuary regulations would now prohibit graywater discharges from vessels 300 GRT or more, except from oceangoing ships without sufficient holding tank capacity to hold graywater while within the Sanctuary.

82. *Comment:* NOAA's discharge regulation should reflect the California Coastal Commission's recommendation to prohibit vessels of 300 GRT or more from discharging sewage or graywater into the waters of the Sanctuary.

Response: NOAA has revised the CINMS discharge regulation to reflect the California Coastal Commission's recommendation and prohibit the discharge of sewage from all vessels 300 GRT or more, as well as the discharge of graywater from vessels 300 GRT or more. Exceptions would be consistent with the California Clean Coast Act, allowing graywater and treated sewage from oceangoing ships without sufficient holding tank capacity to hold these discharges while within the Sanctuary).

83. *Comment:* Due to the volume of their discharges, cruise ships should be directed around the Sanctuary.

Response: Rather than direct cruise ships around the Sanctuary, NOAA is excluding cruise ships from the CINMS sewage and graywater exceptions, thereby prohibiting their discharge within the Sanctuary.

84. *Comment:* Unless NOAA is able to institute a rigorous monitoring and sampling program for sewage effluent from ships as Alaska has done, it is prudent to adopt a no-discharge policy that mirrors the state of California's laws.

Response: Although NOAA may implement some discharge monitoring in partnership with other agencies, NOAA is not currently planning to institute a comprehensive sewage effluent monitoring and sampling program in the Sanctuary similar to Alaska's program (see also the response to comment 75). Regarding adopting a policy that mirrors California's law, see the response to comment 67.

85. *Comment:* All vessels, ships, or large vessels should hold either all waste or sewage until they can discharge it into pump out stations for disposal or treatment on land.

Response: The revised CINMS discharge regulation prohibits discharging untreated sewage within the Sanctuary from vessels less than 300 GRT, and prohibits discharging sewage (whether treated or untreated) within the Sanctuary from vessels 300 GRT or more, except for oceangoing ships that do not have sufficient holding tank capacity to hold sewage while within the Sanctuary.

86. *Comment:* NOAA should either include sewage sludge in the definition of ''sewage'' or explicitly prohibit sewage sludge in the discharge regulation.

Response: Existing CINMS regulations do not provide an exception for sewage sludge discharge/deposit; as such, these discharges/deposits are prohibited.

87. *Comment:* The prohibition of sewage sludge should be incorporated in outreach documents.

Response: CINMS staff will consider this comment when developing outreach products about the revised Sanctuary regulations.

88. *Comment:* Commenter supports the marine sanitation device clarification in the revised proposed discharge regulation.

Response: Comment noted.

89. *Comment:* Commenter supports the proposed definitions of ''graywater,'' ''oceangoing ship,'' and ''cruise ship,'' as well as the Sanctuary's effort to provide greater regulatory consistency and clarity by establishing formal definitions for important concepts relevant to CINMS resource conservation and management.

Response: Comment noted.

Ecosystem Based Management

90. *Comment:* The Management Plan refers to Ecosystem Based Management, but there is no mention of Ecosystem Based Management in the NMSA.

Response: The Management Plan Introduction section refers to ecosystem-based management and the NMSA, and it specifies the sections of the NMSA that NOAA believes support the use of ecosystem-based management. As stated therein, NOAA believes that ecosystem-based management is in keeping with the NMSA's primary objective of resource protection. Section 301(b) of the NMSA, which provides the purposes and policies of the national marine sanctuary system, provides CINMS and the other national marine sanctuaries with a solid framework for ecosystem-based management. Section 301 provides that it is the purpose of the NMSA to, among other things: (a) Maintain the natural biological communities of the national marine sanctuaries, and to protect, and where appropriate, restore and enhance natural habitats, populations, and ecological

processes; (b) develop and implement coordinated plans for the protection and management of these areas with appropriate Federal agencies, State and local governments, Native American tribes and organizations, international organizations, and other public and private interests concerned with the continuing health and resilience of the sanctuaries; and (c) to create models of, and incentives for, ways to conserve and manage these areas, including the application of innovative management techniques. Maintaining biological communities, and protecting, restoring, and enhancing habitats, populations, and ecological processes (see clause a above), along with addressing the health and resiliency of national marine sanctuaries (see clause b above), are endeavors best suited to an ecosystem-based approach. Such an approach is consistent with applying innovative management techniques (see clause c above).

91. *Comment:* NOAA should replace the management plan's Grumbine (1994) definition of Ecosystem Based Management with the definition from the Scientific Consensus Statement on Marine Ecosystem Based Management released in March 2005 (by authors including Jenn Casselle, Jennie Dugan, Ben Halpern, Jeremy Jackson, Satie Airame, and Hunter Lenihan).

Response: Text in the FMP has been revised to reflect the definition of marine ecosystem-based management from NOAA's New Priorities for the 21st Century (NOAA's strategic plan for 2006–2011), rather than the definition provided by Grumbine (1994). NOAA's definition of an ecosystem approach to management is consistent with the 2005 Scientific Consensus Statement on Marine Ecosystem-Based Management, which is available on line at *http://www.compassonline.org/marinescience/solutions_ecosystem.asp*.

Education and Outreach

92. *Comment:* Commenters indicated support for the management plan's education and outreach goals and objectives and the Public Awareness and Understanding Action Plan.

Response: Comment noted.

93. *Comment:* Through the Public Awareness and Understanding Action Plan NOAA should ensure that all employees and crew of Channel Islands National Park concessionaires who bring visitors to the Sanctuary are aware of and understand CINMS regulations and resource conservation issues. Anecdotal evidence suggests that even major concessionaires are not aware of CINMS regulations on matters such as vessel sewage and wastewater discharge. NOAA should also provide an incentive for concessionaires to participate in an education program.

Response: CINMS staff work directly with Channel Islands National Park staff responsible for educating concessionaires through the strategic plan mentioned in the FMP Public Awareness & Understanding Action Plan (Strategy AU.2 activity 3). As part of the Ocean Etiquette Outreach program (AU.3, activity 4), which promotes communication and coordination between California ocean users and Federal and State agencies, CINMS staff plan to engage concessionaires and other boaters in Ocean Etiquette workshops. As the Park reviews and awards concessionaire licenses to various operators, CINMS staff will continue to communicate with the Park on interests and concerns regarding concessionaire compliance with Sanctuary regulations, such as those pertaining to clean boating practices, as well as possible compliance incentives.

94. *Comment:* NOAA should work with the City of Santa Barbara to increase opportunities for effective signage and publicity.

Response: NOAA worked with the City of Santa Barbara (City) in the mid-1990s on several CINMS interpretive signs that are located in Santa Barbara's Shoreline Park. NOAA also works with the City each year by participating in the annual Harbor and Seafood Festival, and serving alongside the City, U.S. Forest Service, National Park Service and Santa Barbara Maritime Museum as a partner in the Outdoors Santa Barbara Visitor Center in the Santa Barbara Harbor (see the Public Awareness and Understanding Action Plan strategy AU.7—Visitor Center Support & Development for more information).

NOAA is currently working with the City Waterfront Department to place signs at the Santa Barbara Harbor fuel dock and along the Santa Barbara Harbor Fish Walk. These signs focus on CINMS, CINP, and marine zoning, and are part of a larger NMSP sponsored initiative called the California Signage Plan. Sanctuary interactive kiosks, like signs, are also an important outreach tool that can help provide CINMS publicity at various locations, such as at the City Waterfront Department office. For information about interactive kiosks, see Public Awareness and Understanding strategy AU.7.

95. *Comment:* The management plan did not indicate how NOAA would assess the effectiveness of strategies AU.1 through AU.8.

Response: NOAA understands the importance of evaluating the effectiveness of its programs. FMP Strategy EV.1 (Measuring Sanctuary Performance Over Time) details how each education program or product will be evaluated, and FMP Table 16 shows specific strategies, objectives, performance measures and metrics for measuring effectiveness of the Public Awareness and Understanding Action Plan. Also, NOAA is working at CINMS to meet the NMSP's system-wide performance measure related to education, which states that ''By 2010 all education programs implemented in national marine sanctuaries will be assessed for effectiveness against stated program goals and objectives and appropriate National and State education standards.''

96. *Comment:* NOAA should clarify for each program whether there are plans to assure that strategies AU.1, and AU.3–AU.9 are reaching a diverse audience.

Response: NOAA strives to reach diverse audiences with its CINMS education and outreach programs and materials. FMP Strategy AU.9 describes how CINMS will build multicultural elements into existing education programs and materials, and activity 5 describes in detail the implementation of a comprehensive multicultural education strategic plan for Santa Barbara and Ventura Counties.

97. *Comment:* NOAA should consider best education practices in the development of Strategy AU.1.

Response: NOAA education staff at CINMS use best practices when developing educational programming. CINMS educators stay abreast of current issues and changes in science and environmental education content standards by participating in annual education conferences and workshops put on by leaders in science education.

98. *Comment:* Given the changing make-up of our population, NOAA should create strategies to create a diverse pool of interns and volunteers, and should create career paths for interns from ethnic groups under-represented in resource sciences. The latter would help create a pool of qualified future resource scientists, technicians, managers and leaders.

Response: As mentioned in Strategy AU.9 of the FMP's Public Awareness & Understanding Action Plan, CINMS implements the MERITO Hispanic Students Internship Program. Text in FMP Strategy AU.2 has been changed to reflect these CINMS internship strategies for under-represented youth as defined in Strategy AU.9.

99. *Comment:* The management plan refers to the Los Marineros education

program, without explaining that this program is now defunct.

Response: NOAA and the Santa Barbara Museum of Natural History (Museum) started the Los Marineros Program in 1987. The Museum took over administration of the program in the mid 1990s. The Museum decided not to continue the program after 2005, which is now reflected in the FMP. NOAA is now working to build Sanctuary stewardship and increase understanding of ocean related threats within the Hispanic community of Santa Barbara and Ventura counties through strategy AU.9, Multicultural Education. A component of this strategy is the MERITO Academy which targets 5th–8th grade teachers and students and provides a meaningful watershed experience through field trips to the beach and Sanctuary.

100. *Comment:* NOAA should mention a shift to a philosophy of sustainability in its CINMS education programs.

Response: Since its designation in 1980, CINMS staff has been educating the community about human impacts on the ocean environment and working to foster a sense of personal ownership and responsibility for care of Sanctuary resources.

101. *Comment:* NOAA should incorporate into education and outreach action plans some specific programs directly facilitating compatible use, such as brochures with simple charts indicating best places to scuba dive, fish, kayak, view wildlife, and so forth.

Response: NOAA's ''Protecting Your Channel Islands'' brochure shows popular anchorages, diving spots and wildlife areas (for pinnipeds and seabirds), and provides tips for watching wildlife and a synopsis of sanctuary and park regulations. Members of the boating and fishing communities participated in the development of this brochure through the Sanctuary Advisory Council and the Sanctuary Education Team. NOAA will continue to work with boaters, fishers, and other interested community members to develop useful brochures and other education materials regarding responsible ways to enjoy Sanctuary resources.

102. *Comment:* NOAA should support or sponsor contests or festivals that celebrate use of the Sanctuary, such as photo contests, harbor seafood festivals, sailing regattas, and whale festivals.

Response: As indicated in FMP Public Awareness & Understanding Action Plan Strategy AU.6, CINMS staff participation in outreach events is identified as a tool to provide Sanctuary information to a widely diverse audience. CINMS staff and volunteers participate in over 30 regional outreach events annually, spanning from Santa Barbara County to Los Angeles County, serving a diverse number of constituents. Events include whale festivals, harbor festivals, boat shows, fishing conventions, and dive industry events.

103. *Comment:* NOAA education staff at CINMS should establish closer contact with researchers whose work forms the information base used by Sanctuary education programs.

Response: NOAA education and research program staff at CINMS work closely together on many different Sanctuary management issues. One example is the ongoing ''From Shore to Sea'' lecture series sponsored by CINMS and CINP, which brings scientists studying the Channel Islands to venues in Santa Barbara and Ventura one night per month for a public presentation about their research. CINMS research and education staff also collaborate on other programs and products including interpreting research data for presentation on the CINMS Web site, annual research summaries, and the CINMS Teacher at Sea program.

104. *Comment:* The management plan should mention the 'Follow That Fish!' curriculum and aquarium exhibit, which is a program that highlights the results of fish movement studies in the Sanctuary conducted by the Pfleger Institute of Environmental Research (PIER) using an acoustic received array.

Response: In 2006, PIER removed its acoustic receivers and discontinued its fish movement study project. Consequently, NOAA is not highlighting this project in the FMP's description of educational activities.

Emergency Response

105. *Comment:* NOAA should develop a means for more timely response to oil spills within the Sanctuary by: (1) Identifying vessels (e.g., local or Sanctuary vessels) capable of boom deployment and skimming systems, (2) investigating the feasibility of the Sanctuary becoming a Clean Seas client, and (3) providing spill cleanup/response equipment cached at various locations in the Channel Islands.

Response: NOAA staff take an active role in spill response preparation by representing CINMS on the Area Contingency Plan (ACP) committee for U.S. Coast Guard Region IX. CINMS staff are also instrumental in helping to revise the ACP to create more effective response to spills, specifically in the area of resource protection. The ACP is a ''cookbook'' for oil spill response that includes contact information for responders, agencies, cleanup contractors, and vessel and equipment resources. This information is constantly updated. Clean Seas LLC has response vessels in place that can quickly respond to spills within the Sanctuary. Another regional organization with vessels and trained crew capable of responding to spills is the Ventura County Commercial Fishermen's Association's Fishermen's Oil Response Team, or FORT. Equipment caches kept on the islands would need to be authorized by the National Park Service. Obtaining and placing any spill equipment would be best done through an agency/responder partnership with those organizations, such as the USCG and Clean Seas LLC, that have dedicated staff with expertise in spill response and all associated equipment and assets. For more information about how CINMS is involved in and addresses emergencies such as oil spills, see FMP Strategy EE.1.

106. *Comment:* NOAA should look into whether oil facilities can store cleanup equipment, inventory equipment already there, and consider whether it can develop an agreement between oil companies and sanctuaries to use that equipment.

Response: Currently oil platforms in the Santa Barbara Channel store various quantities of booming and skimming equipment and dispersants. Full inventory lists are kept and supplied to various Federal, State, and local agencies involved in oil spill response, and these lists are accessible by CINMS staff as needed. Equipment use requires specialized training, and oil companies work with spill response co-ops such as Clean Seas LLC, to provide equipment and personnel for cleanup. Additionally, agencies such as the U.S. Coast Guard can ''federalize'' (place a spill under the jurisdiction of the Federal government if the responsible party is not responding appropriately) an oil spill and then call in authorized, trained contractors to help respond to the spill.

107. *Comment:* NOAA should look towards the future of emergency response and find funding for Clean Seas. Currently oil spill response is paid for by oil companies, so if oil and gas facilities are decommissioned then Clean Seas is not likely to be here.

Response: Although CINMS staff could contribute to planning ideas for maintaining oil spill response capabilities provided by Clean Seas, such an effort would most likely be spearheaded by other NOAA offices (such as NOAA HAZMAT) as well as

Federal, State, and local agencies whose primary mission is oil spill response.

Emerging Issues

108. *Comment:* Commenter expressed support for the management plan review addressing emerging issues.

Response: Comment noted.

109. *Comment:* The management plan should provide a stronger link between the Emerging Issues and Conservation Science action plans by directing research towards evaluating emerging issues.

Response: Research coordination and integration are very important to the evaluation of emerging issues. Within the Conservation Science Action Plan, NOAA has added details about the link between emerging issues and conservation science within the Conservation Science Action Plan Overview and Strategy CS.3, as well as in Strategy RP.1. As explained in RP.1, input from the Advisory Council, the science community, and the public informs CINMS efforts at identifying and assessing current and emerging issues at all stages, including identification of issues, assessment of threats, and tracking and responding to issues.

110. *Comment:* The management plan should clarify whether each emerging issue is: (a) Forecasted to, but not presently harming Sanctuary resources; or (b) already causing harm to Sanctuary resources. NOAA should also develop criteria to determine when an issue is emerging vs. when it has emerged.

Response: The FMP includes a Resource Protection Action Plan in which NOAA has clarified and augmented information on the status of each issue previously listed as an ''emerging issue.'' The Resource Protection Action Plan also articulates how CINMS addresses current issues and how it will address emerging issues. Since NOAA has outlined how it plans to identify, assess, prioritize, and address both current and emerging resource protection issues, it is not necessary to develop criteria for determining when an issue has ''emerged.'' Rather, it is NOAA's intent that CINMS track, assess, prioritize, and determine how best to respond to all issues relevant to protecting Sanctuary resources.

111. *Comment:* Strategy EI.1 could be sufficient for ''emerging issues''—issues that have yet to cause significant harm to Sanctuary resources.

Response: NOAA will implement Strategies RP.1 and RP.2 in identifying, assessing, and responding to all current and emerging issues.

112. *Comment:* NOAA should dedicate funding to emerging issues so as not to depend on volunteers to research such issues, and should specify who is responsible for implementing Strategy EI.1.

Response: The NMSP dedicates and funds policy analysts, an advisory council coordinator, a team of research and monitoring staff, a boat crew, and education and outreach staff to identify, assess, and respond to emerging issues. The implementation of the Resource Protection Action Plan relies on this existing staff structure, as noted in the implementation section of Strategy RP.1. When an emerging issue requires community input and/or is beyond CINMS's capabilities either technically or fiscally, staff rely on the expertise and knowledge of the Sanctuary Advisory Council and agency partners. For complex emerging issues that require a CINMS response, staff have in the past and can in the future reallocate staff time and budget, as well as leverage other agency resources to adequately address an issue.

113. *Comment:* The Track Emerging Issues activity of strategy EI.1 should require that CINMS staff relay the findings of their issue tracking activities to the Advisory Council, with whom they collaboratively identified and prioritized the issues.

Response: CINMS staff have provided and will continue to provide regular updates to the Advisory Council on emerging issues.

114. *Comment:* NOAA should define how it will ''track'' emerging issues.

Response: The Resource Protection Action Plan identifies the ways in which CINMS will identify and track emerging issues in the Sanctuary.

115. *Comment:* NOAA should include marine bioprospecting, offshore energy projects (e.g., wind and wave energy), global greenhouse gas emissions, global warming, and squid boat lights in its list of emerging issues.

Response: NOAA has included marine bioprospecting, offshore energy projects, climate change, and wildlife disturbance caused by artificial lighting as emerging issues in the FMP's Resource Protection Action Plan.

116. *Comment:* The DMP's Emerging Issues Action Plan defers Sanctuary resource protection to a bureaucratic process with no allocated funding, and offers minimal specificity as to when or how management effort will be deployed to mitigate or eliminate impacts from emerging issues.

Response: All CINMS activities ultimately contribute to resource protection, which is the primary purpose of the National Marine Sanctuaries Act. The FMP's Resource Protection Action Plan outlines processes for tracking, assessing, prioritizing, and determining how to respond to current and emerging resource protection issues (processes previously contained in an Emerging Issues Action Plan). These processes are essential to determining how to respond to a given issue at a given point in time, based on the best available information, and depending on available funding and the level of risk or priority for a given issue. Unfortunately, NOAA cannot predict when an issue will become a high priority and what the appropriate response at that time might be. Should, for example, NOAA determine that a given issue warrants development of a new action plan strategy, or perhaps even a new action plan, NOAA's plan for action would be articulated in those documents.

Regarding funding, while the Resource Protection Action Plan's estimated cost table does not reflect potential future investments in CINMS resource protection issues, CINMS does request additional funds to address high priority resource protection issues in a given year as part of its annual budget planning process. Further, the budget table does not show base budget funding (e.g., staff salaries) which is critical to tracking, assessing, prioritizing, and determining how to respond to current and emerging resource protection issues.

117. *Comment:* DMP Strategy EI.2 includes several constructive options for addressing resource protection issues, which if implemented could reduce impacts to Sanctuary resources from resource protection issues.

Response: Comment noted.

Enforcement

118. *Comment:* NOAA should ensure that sufficient funds/resources are available for enforcement and increase available funding for enforcement.

Response: NOAA recognizes resource limitations and necessary program and partner developments may limit implementation of all of the activities in the management plan. NOAA will continue to work with the Department of Commerce, Office of Management and Budget, and Congress in developing supporting justifications when preparing budget submissions. NOAA allocates funds provided by Congress through annual appropriations for national marine sanctuaries and from other sources of funding (e.g., settlement funds) to enforcement of the NMSA and implementing regulations. In doing so, however, NOAA must balance the need for increased enforcement with other

management needs (e.g., science and monitoring, education). NOAA uses these funds to leverage additional investments in enforcement by partner agencies (CDFG, NPS, USCG) to have an effective on-the-water presence in the Sanctuary. NOAA's Office for Law Enforcement, which is funded separately from the Sanctuary budget, also assigns a law enforcement agent to the Sanctuary region.

119. *Comment:* Team OCEAN should be deleted from the Expanding Enforcement Efforts section, Strategy EE.2 and included in the Public Awareness and Understanding Action Plan.

Response: In addition to traditional enforcement, NOAA employs interpretive enforcement through Team OCEAN, a program that reaches out to boaters to help them understand and comply with CINMS regulations. Team OCEAN will not be administered as a substitute for law enforcement, but can complement those efforts. Team OCEAN will remain in the Emergency Response and Enforcement Action Plan because it is an important tool for both emergency response and enforcement. While Team Ocean is mentioned briefly as an activity within strategy EE.2, it is explained in detail in the Public Awareness and Understanding Action Plan (Strategy AU.3).

120. *Comment:* NOAA must ensure the regulations for CINMS are legally binding and enforceable, must have a dedicated/exclusive enforcement program for the CINMS, and/or must establish formal partnerships with as many enforcement agencies as possible.

Response: Primary law enforcement responsibilities for NOAA regulations are carried out by the NOAA Office for Law Enforcement (OLE). An enforcement officer stationed in Long Beach conducts investigations into violations of the National Marine Sanctuaries Act and regulatory prohibitions in coordination with State, local and other Federal law enforcement counterparts. In addition, NOAA signed agreements with the State of California, the National Park Service, and the U.S. Coast Guard that provide authorization for local enforcement personnel from these agencies to enforce Sanctuary regulations. They work with NOAA to conduct patrols and investigate potential violations. For example, the U.S. Coast Guard conducts air and sea surveillance within the sanctuary and has broad Federal enforcement authority. NOAA OLE also works with the U.S. Fish and Wildlife Service, the U.S. Environmental Protection Agency, and the Federal Bureau of Investigation (FBI) to investigate violations of environmental laws within national marine sanctuaries. More information about enforcement of NOAA regulations can be found at *http://www.nmfs.noaa.gov/ole/index.html.*

The CINMS regulations are legally binding and enforceable. They were drafted with extensive input from NOAA's Office of General Counsel, NOAA Office of Law Enforcement, and our enforcement partners—CDFG, NPS and USCG. NOAA's Office of General Counsel for Enforcement and Litigation also establishes a penalty schedule that outlines recommended penalties for violations under the NMSA. This penalty schedule provides notice to the public and provides guidance to the prosecutors as to a general range of penalties for specific violations. The penalty schedule reflects sanctions that NOAA believes will encourage compliance and deter violations; however, in every case, NOAA retains the ability to assess a penalty up to the statutory maximum of $130,000. The NMSA penalty schedule is publicly available and can be accessed through this link: *http://www.gc.noaa.gov/schedules/58-NMSA%20Penalty%20Schedule%209-06.pdf.*

121. *Comment:* NOAA should not issue the new regulations for CINMS and should instead rely on existing regulations and authorities for additional protection.

Response: NOAA carefully examined existing CINMS and other relevant regulations as part of the management plan review, and determined that in some cases strengthening of Sanctuary regulations was warranted, as described in section 2 of the FEIS. NOAA often relies on other agencies' regulations to help protect sanctuary resources. However, sometimes the scope of these regulations is not broad enough to protect sanctuary resources, or may need to be reinforced with parallel sanctuary regulations, which allow for additional enforcement options. NOAA always works very closely with other agencies to minimize potential management conflicts and to promote compliance with sanctuary regulations and the regulations of other agencies.

122. *Comment:* NOAA should increase, rather than maintain at current levels, vessel and aircraft surveillance operations.

Response: NOAA will pursue opportunities to expand vessel and aircraft based surveillance, but will first focus efforts on maintaining access to existing opportunities and platforms for this activity. To better reflect this NOAA has changed the activity title to ''Maintain Effective Vessel and Aircraft Surveillance Operations.''

123. *Comment:* To ensure that CINMS discharge regulations are being complied with, NOAA should conduct snapshot water quality monitoring, perhaps immediately following cruise ship transits through the CINMS, as well as at other key times of high vessel traffic.

Response: CINMS will consider snapshot water quality monitoring during implementation of FMP Strategy WQ.2—Water Quality Protection Planning.

124. *Comment:* Commenter strongly supports additional efforts by CINMS to expand enforcement efforts in order to ensure compliance with new and existing Sanctuary regulations, as well as other federal and state laws and regulations.

Response: Comment noted.

Fishing

125. *Comment:* Several commenters expressed concern about regulating fishing activities under the CINMS regulations and NMSA, making one or more of the following points: There is no connection between the overall management of CINMS as both a Sanctuary under the NMSP and an EFH designation under NMFS.

NOAA should utilize the Magnuson-Stevens process for fishery management, and the Pacific Fishery Management Council should be the body to adopt fishery regulations within the Sanctuary and to ratify any marine reserves designation.

NOAA has no functional MOU between the NMSP and NMFS concerning marine zoning, fishery management planning, and ecosystem based adaptive co-management.

NOAA should revise each of the CINMS prohibitions to provide exemptions for all lawfully conducted state and federal fisheries.

The CINMS has no need or the resources necessary to be involved in fisheries management.

Response: NOAA considers both the National Marine Sanctuaries Act (NMSA) and the Magnuson-Stevens Fishery Conservation and Management Act (MSA) to be tools that can be used exclusively or in conjunction to regulate fishing activities to meet Sanctuary goals and objectives. NOAA evaluates regulatory options on a case by case basis to determine the most appropriate regulatory approach to meet the stated goals and objectives of a sanctuary. If NOAA determines additional regulations on fishing within CINMS are necessary, NOAA will follow the process for developing such regulations

in consultation with the PFMC and State, and as directed under section 304(a)(5) of the NMSA.

For example, the recently designated marine reserves in the CINMS resulted from a coordinated regulatory effort among the Pacific Fishery Management Council, NMFS and NMSP. Under the MSA, bottom contact gear is prohibited in these zones. The NMSA was used to create no take zones and complement the bottom contact gear prohibition by prohibiting all other extractive activities, including fishing.

NOAA strives for cooperative and adaptive management among its various offices including NMFS and the NMSP, and does not typically establish MOUs for this purpose. The NMSP and NMFS regularly collaborate to integrate zoning and fishery management by jointly participating in Sanctuary Advisory Council and Regional Fishery Management Council meetings, information and data exchanges, and cooperative enforcement of zoning and fishery regulations within national marine sanctuaries.

Where NOAA has deemed it appropriate, the CINMS regulations provide exceptions for lawful fishing activities.

NOAA has the expertise to determine the goals and objectives necessary to protect the nationally significant resources of national marine sanctuaries. This responsibility extends beyond fishery resources to conservation, recreational ecological, historical, cultural archeological, scientific, educational and esthetic qualities of national marine sanctuaries. If NOAA, in consultation with advisory councils and other stakeholders, determines that fishing regulations are needed to further sanctuary goals and objectives, section 304(a)(5) of the NMSA requires that the Sanctuary provide the appropriate Fishery Management Council the opportunity to prepare draft sanctuary fishing regulations for the Exclusive Economic Zone that will fulfill the Sanctuary's goals and objectives.

126. *Comment:* NOAA should add wording to protect rights to fish and recreate in Sanctuary waters in the emergency regulations.

Response: NOAA is not modifying the emergency regulations section of the terms of designation for the purpose mentioned. In the case of an emergency within the Sanctuary, fishing or recreating may temporarily not be appropriate or possible in certain areas. For example, when Alaska Airlines Flight 261 crashed in the Sanctuary in January 2000, a temporary navigational closure was established around the crash site. These emergency provisions are not used lightly, can only be in place temporarily (as long as necessary to respond to the emergency), and are subject to extensive administrative review. Many federal and state agencies have authority to issue temporary emergency regulations in response to emergency situations, such as natural or man-made disasters.

127. *Comment:* NOAA has completely ignored its commitment to the fishing community at CINMS from the public awareness goal.

Response: NOAA continues to carry out its education and outreach commitment to the fishing community at CINMS. NOAA has engaged the fishing community in the development and delivery of several outreach tools, for example: Regulatory brochures, signage at harbors, and guest speaking opportunities to the Sanctuary Advisory Council and general public.

128. *Comment:* NOAA should recognize the CINMS fishing community as a cultural resource.

Response: NOAA recognizes the importance of the fishing community and provides opportunities for its involvement in Sanctuary research, education, and resource protection activities, such as in development of outreach tools (see also the response to comment 127), and in advising CINMS through the Commercial Fishing and Recreational Fishing seats on the Sanctuary Advisory Council. Moreover, NOAA believes healthy fisheries within a national marine sanctuary are an indication of a healthy ecosystem protected by that sanctuary. NOAA has already incorporated, and will continue to incorporate, fishing themes into CINMS education and outreach efforts, such as public lectures and weather kiosks. CINMS staff will also continue to work with the fishing community to develop additional fishing-related programs and products.

129. *Comment:* Reductions in commercial and recreational fishing vessels can result in economic impacts, including impacts on boat owners, the fuel dock, boatyard, and Port District.

Response: In the FEIS, NOAA has concluded that recreational and commercial fishing should experience no significant adverse impacts from implementation of the revised CINMS regulations. Furthermore, these regulations would not result in a ''reduction'' in commercial and recreational fishing vessels. A number of the regulations provide specific exceptions to accommodate lawful fishing activities. In addition, the management plan includes a number of programs that support boating in general (e.g., safe boating brochure, the Protecting Your Channel Islands brochure), and that should also be helpful to boaters engaged in fishing.

General Comments

130. *Comment:* General support expressed for the changes and updates proposed in the management plan, and the associated background information and environmental analysis.

Response: Comment noted.

131. *Comment:* Broad support expressed for resource conservation and protection, and acknowledgement that the Sanctuary is ''moving in the right direction.'' NOAA should not, however, over-regulate or adopt regulations that are inconsistent with other agencies.

Response: Comment noted.

132. *Comment:* General support indicated for DEIS Alternative 1 due to concern about increased use of the Santa Barbara channel by cruise ships, interest in long-term protection of resources and existing Sanctuary uses, and concern about protection against predicted future increases in industrialization of the Santa Barbara Channel area.

Response: Comments noted. For additional context, see the responses to comment 283 regarding support for Alternative 1 as it relates to water quality, comment 78 regarding support for the Alternative 1 discharge regulation, comment 176 regarding support for the Alternative 1 lightering regulation, and comment 221 regarding support for the Alternative 1 nearshore vessel approach regulation.

133. *Comment:* Support expressed for CINMS to retain its current role focusing on and facilitating public and scientific attention on the Channel Islands area, and prohibiting certain industrial extractive activities within the Sanctuary.

Response: Comments noted.

134. *Comment:* The DMP and DEIS are so large and burdensome that they prohibit real public input.

Response: NOAA believes that the length of the documents is appropriate and necessary to explain the justification for, and analyze alternatives to, the revisions to the Management Plan and associated regulations, as required by the NMSA, the National Environmental Policy Act (NEPA), and other relevant authorities including the Administrative Procedure Act. NOAA believes the organizational structure should allow readers to find information pertinent to their specific interests.

135. *Comment:* NOAA must update the current policies and programs at CINMS to develop a plan that will

enhance protection of Sanctuary resources for future generations, and succeed in achieving the goals and objectives of the National Marine Sanctuaries Act.

Response: NOAA implemented changes that will update current CINMS policies and programs, and enhance protection of Sanctuary resources.

136. *Comment:* Commenters indicated that they would like to incorporate by reference, and/or support all or a subset of the Sanctuary Advisory Council's Conservation Working Group comments.

Response: Please refer to responses to the Conservation Working Group's comments, listed in the table at the beginning of the FEIS response-to-comments appendix under ''Krop, Linda'' and dated July 7, 2006.

137. *Comment:* NOAA should invest (fiscally or through dedicated personnel) in the National Park Service's long-term kelp forest monitoring program or other marine-based resource monitoring programs to further knowledge of the ecosystem.

Response: NOAA values the kelp forest monitoring program implemented by the National Park Service, and intends to continue providing vessel and staff support to this important program as resources allow. NOAA strongly supports cooperative management of Sanctuary resources by promoting and coordinating the efforts of outside research groups whose work increases understanding of Channel Islands biological and cultural resources. Enforcement, monitoring, education, and outreach efforts are achieved through partnerships with various state and federal agencies, universities, private institutions and non-profit organizations. CINMS provides its partners with opportunities onboard its research platforms, including the R/V *Shearwater* and, historically, the *Seawolf* aircraft. In 2006, CINMS research vessels were at sea for more than 200 days conducting projects on seabirds, marine mammals, kelp forests, oceanography, intertidal monitoring, and geology in and around the Sanctuary. Further, a proportion of the CINMS annual budget has been and continues to support partner research, monitoring and enforcement activities.

138. *Comment:* NOAA should consider and be guided by the special and unique nature of the islands and surrounding waters in crafting the Management Plan, regulations, and programs.

Response: The special and unique characteristics of the Islands and surrounding waters were significant factors in the decision to designate the waters surrounding the Islands as a national marine sanctuary, and remain the overarching reason for revising CINMS regulations and implementing a variety of programs.

139. *Comment:* NOAA should provide adequate resources and funding levels to implement the management plan, especially given increased requirements from the recently designated Channel Islands MPA Network.

Response: NOAA recognizes that resource limitations as well as the necessary program and partner developments may limit implementation of all of the activities in the various management plans. NOAA will continue to work with the Department of Commerce, Office of Management and Budget, and Congress in developing supporting justifications when preparing budget submissions. The Management Plan articulates the full suite of potential CINMS actions for the next five to ten years. However, CINMS's budget may not allow for a high level of implementation of every planned activity. NOAA has described the planned implementation level of each activity in various future funding scenarios (see the FMP Action Plan Summary Table). Regarding funding and marine protected areas see the response to comment 118.

140. *Comment:* Language in the management plan is subjective and vague.

Response: NOAA has been as specific and transparent as possible in describing planned actions in the CINMS management plan and EIS. As a federal resource management agency, NOAA must meet federal standards of objectivity and transparency in describing the actions and rationale for planned management actions within national marine sanctuaries.

141. *Comment:* NOAA does not identify the new threats used to justify regulation changes.

Response: NOAA has described threats to Sanctuary resources and qualities that warrant new and revised CINMS actions in the beginning of each action plan under the header ''Description of the Issues,'' as well as throughout the Sanctuary's FEIS and in this preamble to the final rule.

142. *Comment:* NOAA should focus on practical, precise, and prudent CINMS management actions and enforcement, rather than expanding Sanctuary authority beyond its means. Additional changes should only be seriously discussed or considered if these efforts indicate further need of beneficial adjustment.

Response: NOAA considered such concepts prior to proposing the CINMS revised management plan, revised authority and regulations. Per the National Marine Sanctuaries Act, NOAA is required to evaluate sanctuary management plans and regulations at regular intervals. During the course of management plan reviews, NOAA solicits public and agency input to help determine the extent to which sanctuary management plan changes may be warranted, as well as to help determine the nature of any such changes.

143. *Comment:* Despite a new Sanctuary office building to be built on the campus of UCSB, NOAA should continue to maintain a public CINMS presence at the waterfront, which is heavily used by both residents and visitors. Most members of the public will not be exposed to the offices at UCSB, because they do not travel there regularly, because of high parking fees, and for various other reasons.

Response: NOAA plans to keep a CINMS office in the Santa Barbara Harbor to support operations of the R/V *Shearwater*, and to maintain a public access contact point at the Santa Barbara Harbor through educational signage and a brochure rack (currently part of Santa Barbara Harbor office). NOAA has also installed a Sanctuary interactive kiosk at the Santa Barbara Harbor and plans to continue a partnership with the Harbor's Outdoors Santa Barbara Visitor Center. In partnership with the Santa Barbara Maritime Museum at the Santa Barbara Harbor, NOAA also intends to maintain and develop public education exhibits relating to maritime heritage.

144. *Comment:* Support expressed for NOAA's development and support of on-going CINMS partnerships with a variety of local institutions, as well as a focus on water quality and teacher training, all of which is a benefit to the community.

Response: Comment noted.

145. *Comment:* NOAA should explain how a subset of the NMSA purposes and policies were selected and listed in the management plan's Introduction section, as opposed to listing all of the NMSA's purposes and policies.

Response: The list of purposes and policies provided in the FMP is a complete, verbatim list of the purposes and policies of the NMSA. NOAA has revised the text introducing the list to clarify that it is a complete and verbatim list.

146. *Comment:* Did NOAA review the original management plan, did it work, and why or why not?

Response: Sanctuary staff thoroughly reviewed the 1983 management plan's goals and objectives, and assessed the extent to which they were

accomplished, as well as the continuing relevancy of each. Staff then engaged in a similar discussion with the Sanctuary Advisory Council in 1999. In general, NOAA has made progress towards accomplishing the broad goal areas of the original CINMS plan: Resource protection, research, interpretation, and visitor use. Through enforcement of regulations and collaboration with other agencies and constituents NOAA has enhanced protection of Sanctuary resources. NOAA has made strides towards directing research efforts to resolving management concerns and increasing understanding of the Sanctuary environment and resources, including through use of the Sanctuary's research vessels. NOAA has developed interpretative programs that enhance public awareness and understanding of the significance of the Sanctuary and the need to protect its resources. NOAA has encouraged commercial and recreational use of the Sanctuary that is compatible with protection of its significant resources, such as placing trained naturalists on board commercial whale watching vessels. Within the Introduction to the FMP, NOAA has added text to describe the review of the 1983 CINMS management plan.

147. *Comment:* NOAA has used science to support the notion of new threats in CINMS that is so selective it does not meet basic ethical standards for science. NOAA should provide data to support new threats such as: Declines in bird populations, evidence that nutrient cycles are disrupted relative to humans visiting, kelp forests being in decline in fished areas, and showing that predator prey relationships govern ecosystem functions and are compromised with any size frequency data on harvested populations.

Response: NOAA must comply with all federal standards, such as the National Environmental Policy Act, the Administrative Procedure Act, and the Data Quality Act, regarding the use of science. NOAA did not make any of the statements mentioned about Sanctuary resources (declines in bird populations, etc.) in the CINMS management plan. Similarly, NOAA has not made statements in the management plan about a new threat from evidence that nutrient cycles are disrupted relative to humans visiting. However, in the FEIS NOAA does discuss and provide references for information indicating that sewage and graywater discharges have the potential to disrupt nutrient cycles. Finally, NOAA has not made statements in the management plan indicating that predator prey relationships govern ecosystem functions and are compromised with any size frequency data on harvested populations.

148. *Comment:* NOAA should develop a Man in the Biosphere program working group.

Response: The Sanctuary Advisory Council is the body that develops working groups to discuss Sanctuary issues. NOAA recommends that the commenter provide this suggestion directly to the Sanctuary Advisory Council.

149. *Comment:* NOAA should create a budget for an independent community GIS program to foster social justice and oppose NMSP neocolonialism.

Response: The NMSA does not direct NOAA to develop social justice programs, and such efforts would be outside the scope of actions proposed in the CINMS management plan. NOAA disagrees with the commenter's assertion that the NMSP is engaged in ''neocolonialism.''

150. *Comment:* NOAA should not refer to life forms as ''resources'' in the text of the management plan.

Response: ''Resource'' is a broadly defined term in the Office of National Marine Sanctuaries' program wide regulations (15 CFR 922.3) to include all components within a sanctuary that contribute to the conservation, recreational, ecological, historical, research, educational, or aesthetic value of the Sanctuary (15 CFR 922.3). The use of this term does not intend to connote that sanctuary components are valued solely on the basis of their potential for human use or exploitation.

151. *Comment:* Since people go to the islands to enjoy them, NOAA should regulate without excluding the public, such as dive charter vessels, and without restricting where vessels moor.

Response: Consistent with purposes and policies of the NMSA, NOAA facilitates public and private uses of the national marine sanctuaries to the extent that such uses are compatible with the primary goal of resource protection, and not prohibited by other authorities. The revised CINMS regulations prohibit most vessels 300 GRT or more from approaching within one nmi of island shores. Such vessels are consequently precluded from mooring at the Islands. Sanctuary users must also comply with all applicable regulations while in the Sanctuary, not only with CINMS regulations. The California Department of Fish and Game and Channel Islands National Park seasonally limit access to certain nearshore areas of the Islands during seabird nesting.

152. *Comment:* NOAA should use forward thinking and the best environmental protections to protect the Channel Islands from an array of new threats and pressures, especially since new threats may emerge before the next management plan review.

Response: Strong environmental protections are necessary for the Sanctuary, and the management plan should be forward thinking. The NMSA requires NOAA to review national marine sanctuary management plans at regular intervals. Should any threats to Sanctuary resources arise between management plan review cycles, NOAA can take action to address such threats without engaging in a management plan review process, consistent with applicable authorities (see Resource Protection Action Plan Strategy RP.2).

153. *Comment:* The CINMS management plan should connect management of coastal resources with the Sanctuary, recognizing that there is connectedness between a lot of pelagic fish species and the Sanctuary. NOAA should not manage the Sanctuary as if it is isolated from these other areas.

Response: NOAA manages CINMS resources with the understanding that the Sanctuary exists in a coastal ocean environment within which administrative boundaries do not provide a barrier between resources inside and outside of the Sanctuary. Pelagic fisheries in the Sanctuary region are managed by NMFS (with recommendations from the Pacific Fishery Management Council) under the MSA, as well as by the California Department of Fish and Game. CINMS consults with these and other partner resource agencies regarding any implications for Sanctuary resources that may result from management actions both within and outside of the Sanctuary. In addition, the NMSP West Coast Region works to integrate strategies and programs across west coast national marine sanctuary sites, and also to coordinate efforts with other federal, state, local, and regional ocean management agencies. See also the response to comment 31 for information about marine ecosystem extents and expanding the Sanctuary.

154. *Comment:* NOAA should demonstrate, through specific CINMS programs, that it encourages compatible use. This is an important component in boosting CINMS's image as being friendly to local interests.

Response: NOAA encourages compatible use through several CINMS program areas. Education and outreach programs, for example, develop and distribute the ''Protecting Your Channel Islands,'' ''Boating & Safety,'' and the ''Protecting Our Seabirds'' brochures with this purpose in mind (see also the response to comment 101). These

brochures provide information and helpful tips about various activities people may enjoy in the Sanctuary, such as diving and fishing, and how to do so in a safe and responsible manner. In addition, several pages on the CINMS Web site provide information about how to get to the islands, as well as information about the best times of year to engage in certain activities. The CINMS Maritime Heritage Program provides information to divers about recommended shipwreck dive sites, while Research and Monitoring Program staff work closely with researchers from all over the world to facilitate appropriate research within the Sanctuary. The Sanctuary Advisory Council includes members from diverse user groups, several of which have active working groups.

155. *Comment:* Frustration expressed that NOAA, at the time the DMP/DEIS was released, was still only at the stage of developing a process for dealing with marine reserves and boundary expansion issues, both of which have received strong public support in the Ventura and Santa Barbara communities.

Response: NOAA believes in ensuring that the best available science is used in national marine sanctuary decision making, and in dedicating sufficient resources to each environmental review project. NOAA values the public support for processes to consider establishing marine reserves within the Sanctuary, and to evaluate the Sanctuary boundary. NOAA has since completed implementation of a network of marine reserves and marine conservation areas within the Sanctuary (72 FR 29208). NOAA determined that the best manner in which to evaluate the CINMS boundary was to first conduct a comprehensive biogeographic assessment of the Sanctuary and surrounding environment. Now that the biogeographic assessment is complete, given sufficient resources, NOAA plans to initiate the environmental review process for boundary evaluation at an appropriate time in the future.

156. *Comment:* The management plan update process that started in 1999 has been very lengthy and the remaining steps of converting the draft plan to final should be completed as expediently as possible.

Response: NOAA values the efforts of everyone involved in the CINMS management plan review to date. The length of this review is due to many factors, including that the CINMS management plan review was the first comprehensive management plan review the NMSP initiated for the national marine sanctuaries designated prior to 1995. The CINMS management plan review was also lengthened in order to address issues concerning large vessel discharge raised by the California Coastal Commission and others during the public comment period on the DMP/DEIS. NOAA determined that addressing such issues required development of an SDEIS, and providing a supplemental public comment period.

157. *Comment:* The management plan's action plans should be both well funded and adequately staffed, perhaps with the assistance of the NMSP's West Coast Region, to carry out the Sanctuary's programs and objectives.

Response: As part of the management plan review process, CINMS staff worked to prioritize the strategies and activities in the management plan's action plans (see Appendix A1 of the FMP for a table identifying how each activity will be maintained or implemented in the future). Staff from the West Coast Regional Office (WCRO) work on management issues that are primarily regional in scope; they also work with individual sanctuaries on priority management activities that would benefit from the WCR staffs' expertise.

158. *Comment:* The management plan should include a Memorandum of Understanding (MOU) between various Federal and State agencies, including the Coastal Commission, to better respond to current water quality issues and conditions. The MOU should reflect the Plan for California's Nonpoint Source Pollution Control Program.

Response: Although NOAA does not envision drafting an MOU among various Federal and State agencies as a direct activity associated with this CINMS management plan review, the agency recognizes the important role of MOUs in better articulating roles and responsibilities among the multitude of management authorities that typically exist within national marine sanctuary regions (see Strategy OP.3 in the FMP for a description of how the NMSP formalizes relationships with other authorities). The NMSP has implemented several MOUs across the sanctuary system (including several at CINMS) and, if appropriate, may do so again in the CINMS region sometime in the future. This could involve MOUs related to water quality protection. NOAA recognizes the importance of state agency partners, and the value of consistency among respective programs to the extent practicable.

159. *Comment:* The management plan's Action Plan activity ''status'' descriptions should be explained in more detail to include specific dates, if possible, or at least be revised to include some definition of the phrase ''years 1–5.''

Response: NOAA has included specific dates, where possible, to describe the status of activities in the FMP. NOAA has added information to explain the meaning of years 1–5, which now appears in the FMP's Action Plan Background section entitled, ''How Are Action Plans Organized?''

160. *Comment:* The DMP's description of the Sanctuary Setting could be augmented by recent information that has been recently made available through the NCCOS Biogeographic Assessment report.

Response: NOAA has revised FMP text to reference the biogeographic assessment (NCCOS 2005).

161. *Comment:* The islands are special, unique, and Congressionally recognized as a place for extra protections, whereas there are other areas to take large vessels and personal watercraft.

Response: Comment noted.

Global Climate Change

162. *Comment:* NOAA should address climate change/global warming and its effects on Sanctuary resources. NOAA should: (1) Formally acknowledge the threat of global warming and work to better understand how global warming may affect Sanctuary resources, (2) reduce greenhouse gas emissions associated with CINMS operations, and (3) advocate, through appropriate administrative channels, for the deployment of a national response to global warming to reduce its impacts on the climate, and thus on CINMS resources.

Response: NOAA has added language to the FMP's Resource Protection Action Plan that explains how the NMSP and NOAA are assessing potential climate change impacts on national marine sanctuaries and how such impacts may be mitigated. NOAA has also added a strategy to the FMP's Operations Action Plan that discusses how CINMS is working to green its operations. Finally, NOAA has added information to the FMP's Conservation Science Action Plan strategy CS.3, about pursuing development and future monitoring of a carbon budget for the Sanctuary. NOAA would consider data and findings from this work as part of its collective scientific efforts to inform climate policy.

Goals

163. *Comment:* NOAA should explain why the old and new CINMS goals are so different.

Response: In general, goals from the 1983 CINMS management plan are encompassed within the new goals articulated in this FMP. NOAA revised the CINMS management plan to better explain that the original goals are missing several important concepts and nuances encompassed in the National Marine Sanctuaries Act and reflected in the new goals for the Sanctuary (as revised for the FMP).

164. *Comment:* NOAA should clarify if the CINMS goals presented in the management plan are new, and who decided upon them.

Response: NOAA determined that CINMS goals should directly reflect the overarching mission of the ONMS and be derived from the purposes and policies of the NMSA, as enacted by Congress. All of the seven goals provided in the DMP were paraphrased from section 301 of the NMSA. NOAA has since decided to use language taken directly from NMSA section 301, rather than to paraphrase it. NOAA has also added two goals that contain concepts from NMSA section 301 that were previously missing from the CINMS goals, and additional explanation regarding goal development.

165. *Comment:* CINMS goal four (i.e., provide comprehensive and coordinated conservation and management of these marine areas, as well as the activities affecting them, in a manner complementing existing regulatory authorities) has yielded new prohibitions that are vague and enabling, duplicate other regulations, and are inconsistent with the CINMS charter. NOAA should rewrite the goal to state ''* * * complementing, but not duplicating * * *.''

Response: The new prohibitions are not inconsistent with the CINMS terms of designation (referred to above as the ''charter''). Furthermore, the NMSA provides authority for, among other things, ''* * * comprehensive and coordinated conservation and management of these marine areas, and activities affecting them, in a manner which complements existing regulatory authorities.'' The CINMS terms of designation acknowledge that the NMSA ''authorizes the promulgation of such regulations as are reasonable and necessary to protect the values of the Sanctuary.'' As evidenced by the analysis in the FEIS, the new prohibitions meet this criterion.

While CINMS may have similar regulatory prohibitions as another agency, NOAA has crafted CINMS regulations to be complementary. Further, the NMSA provides a different suite of penalties than available under another regulatory authority.

166. *Comment:* Ecosystem-based management is adaptive, but given that it has been 25 years since the last management plan, it is not clear whether Sanctuary goals are adaptive.

Response: CINMS goals directly reflect the findings and purposes and policies of the NMSA. These findings, purposes and policies are very broad, encompass all of the actions identified in the FMP, and have been adapted several times during reauthorization of the NMSA by Congress. In turn, the CINMS goals are broad enough that CINMS can adapt its management actions as necessary.

167. *Comment:* NOAA should make the CINMS goals more consistent with the NMSA by using the word ''facilitate'' instead of ''allow'' in goal six, by encouraging compatible public and private commercial and recreational use, and by adding goals for science and monitoring.

Response: NOAA has revised the CINMS goals to make them more consistent with the NMSA. A new goal three regarding support for science and monitoring has also been included.

168. *Comment:* CINMS has not honored its commitments to programs and stonewalled basic data management. CINMS goals five, six, and seven are empty promises with no budget.

Response: FMP Strategy CS.2 is dedicated to comprehensive data management. Regarding goal five (now six), NOAA believes the CINMS marine zoning process demonstrates strong models for conserving and managing national marine sanctuaries and applying innovative management techniques. Regarding goal six (now seven), CINMS provides education and outreach materials aimed at facilitating public and private uses of resources that are compatible with resource protection. These materials help Sanctuary users understand and learn about activities they may enjoy within the Sanctuary, and where certain types of activities are prohibited. Regarding goal seven (now eight), CINMS cooperates regularly with national and international programs encouraging conservation of marine resources. CINMS frequently hosts international delegates interested in learning about Sanctuary issues and how CINMS is addressing them. CINMS staff also represent the ONMS and NOAA in exchanges with marine resource management agencies in other countries, and participate in international conferences focused on marine conservation. CINMS staff also often cooperate with national programs encouraging conservation of marine resources (see the FMP for specific examples). The FMP does not describe a budget for each goal. Budgets are developed for action plans, which are designed to meet CINMS goals.

Introduced Species

169. *Comment:* Commenters support the Sanctuary's new introduced species prohibition, efforts to prevent the release of introduced species in the Sanctuary, and the exemption under this prohibition for striped bass released during catch and release fishing.

Response: Comment noted.

170. *Comment:* The prohibition on releasing introduced species may conceivably put an angler in a position of non-compliance with regulations from other entities if the angler catches an introduced species that is not legal to catch (per such other entities), but the angler cannot release it due to the CINMS prohibition. The final regulation should leave an angler with a safe and legal course of action.

Response: NOAA is not aware of any state or federal fishing regulations that would require an angler to release an introduced species caught in the Sanctuary. Thus, complying with this regulation on releasing introduced species would not place an angler in a position of non-compliance with regulations from other entities. Furthermore, NOAA encourages recreational anglers to assist in collecting information about introduced species by keeping specimens and sharing them with NOAA and other resource management agencies, such as the California Department of Fish and Game.

171. *Comment:* The regulation prohibiting the introduction of introduced species should have an exemption for aquaculture or mariculture activities pursuant to a valid lease, permit, license, or other authorization.

Response: Intentionally introducing species or experimenting with new introduced species is not an appropriate activity in national marine sanctuaries because introduced species may threaten the diversity or abundance of native species or the ecological stability of waters in which they occur. They may also threaten commercial or recreational activities dependent on sanctuary waters. The California Department of Fish and Game (CDFG) asserts ''invasive species are the number two threat to rare, threatened or endangered species nationwide, second only to habitat destruction,'' (Leet *et al.* 2001). Although national marine sanctuaries retain authority to address this threat to sanctuary resources, the NMSP would work very closely with the

State of California regarding any aquaculture proposals that might arise in the Sanctuary area.

172. *Comment:* NOAA should add a specific action plan in the Education and Outreach area to educate Sanctuary users how to comply with the prohibition on introduced species, such as a ''Keep your boat bottom clean!'' information brochure.

Response: Education, especially boater education, about introduced species is important. Introduced species in the Sanctuary are an emerging resource protection issue. The FMP action plans are meant to be living documents that incorporate the most current resource issues in the Sanctuary into our plans and programs. NOAA has not added a separate action plan on introduced species; however, CINMS plans to incorporate education about introduced/invasive species into education programs and materials. The Long-term Monitoring and Experiential Training for Students (LiMPETs) program (Strategy AU.1, activity 5) monitors algal and invertebrate species on the Channel Islands and may be a program where invasive species education can be incorporated. CINMS staff also participate in annual efforts sponsored by the Santa Barbara Waterfront Department and California Department of Fish and Game to remove the invasive Japanese kelp, Undaria.

FMP Strategy AU.6, activity 1 (Boater Safety Tips Brochure) also addresses introduced species by including information related to boating safety, regulations on discharge in the ocean and sanctuary, clean boating practices, and local marine refuse stations. Additionally, as explained in Strategy AU.6, activity 5, CINMS participates in a variety of outreach events each year including whale festivals, harbor festivals, boat shows, and dive industry events. These events include boater outreach where education about a variety of CINMS regulations and issues, including aquatic nuisance/invasive species, is shared with the public and boaters. Any tool or product mentioned under Strategy AU.6 will be updated to reflect any changes to CINMS regulations.

173. *Comment:* NOAA should explain how Sanctuary research vessels are going to comply with the new prohibition on introduced species, especially given that they are docked in a port containing invasive species.

Response: CINMS regularly inspects and cleans its vessels and equipment in order to minimize the risk of our activities being a vector for introduction of invasive species. CINMS is also working with the Santa Barbara Waterfront Department to assess and mitigate the threat of invasive Japanese kelp in Santa Barbara Harbor.

174. *Comment:* Given that the proposed Sanctuary prohibition on introduced species is largely redundant of State regulation, the Sanctuary should support the existing, spatially comprehensive authorities that are addressing the invasive species problem, especially where the Sanctuary is at risk.

Response: NOAA supports existing regulatory authorities on introduced species. However, the CINMS regulation for introduced species differs from similar laws and regulations in that it: (1) Provides place-based protections specifically for CINMS; (2) prohibits transgenic species introductions in both state and federal waters of the Sanctuary; and (3) prohibits introducing or otherwise releasing species beyond the one nmi offshore Channel Islands National Park boundary. Furthermore, the introduced species regulation establishes a deterrent against intentional and unintentional introductions or other releases of introduced species into the Sanctuary through civil penalty (up to $130,000 per incident, per day) under the NMSA. Finally, this regulation prohibits introductions of species native to California but not native to the ecosystems of the Sanctuary.

175. *Comment:* NOAA should clarify the burden of proof for enforcing the prohibition on introducing introduced species by adding an ''intent to release'' provision.

Response: NOAA enforcement personnel maintain prosecutorial discretion in determining whether or not to prosecute violators of CINMS regulations. NOAA is not incorporating ''intent to release'' into the language of the prohibition because it does not think there should be a requirement of intent in the regulation.

Lightering

176. *Comment:* NOAA should adopt the prohibition on lightering included in Alternative 1 to further Sanctuary resource protection, protect against lightering related oil spill impacts, and further protect water quality.

Response: NOAA has decided not to include the lightering prohibition in the CINMS regulations at this time because large scale vessel lightering does not occur in the Sanctuary, and NOAA does not believe it is likely to become a common practice given the Sanctuary's geographic location (i.e., its distance from major ports), the Area to Be Avoided that advises large vessels to avoid the majority of the Sanctuary (excluding the TSS), and the established traffic patterns within the Sanctuary (e.g., large vessels typically transit the Sanctuary through the TSS). Regarding smaller vessels, NOAA understands that the occasional practice of sharing fuel between boats (also a form of lightering) may occur, and that this practice may help prevent other possible problems such as vessel groundings. For now, existing prohibitions against discharges into the Sanctuary will be used to address spills associated with small-boat to small-boat fuel transfers. Should lightering become an issue that NOAA deems necessary to regulate in the future, NOAA may consider proposing a Sanctuary lightering regulation. Although NOAA is not prohibiting lightering activities at this time, all vessels must still comply with the CINMS discharge and deposit regulation.

177. *Comment:* The lightering prohibition in Alternative 1 should include an exception for emergencies. For example, if a vessel loses power, drifts into and becomes embedded in the islands, it would need to be lightered.

Response: NOAA is not including the lightering prohibition in the CINMS regulations at this time (see the response to comment 176). However, note that the lightering prohibition described in Alternative 1, as with most Sanctuary regulations, includes an exception for ''an activity necessary to respond to an emergency threatening life, property, or the environment.''

Liquefied Natural Gas

178. *Comment:* NOAA should prohibit Liquid Natural Gas projects within CINMS boundaries. NOAA should also address impacts from LNG projects outside the Sanctuary boundary through early consultation with project applicants and permitting agencies. If such projects would harm Sanctuary resources, they should not be permitted. NOAA should also maintain adequate enforcement effort so that if LNG projects violate CINMS regulations, such as the discharge regulation's ''enter and injure'' clause, or the introduced species regulation, the violations are prosecuted and properly mitigated.

Response: CINMS regulations include prohibitions on disturbing the seabed, and discharging or depositing within the Sanctuary in the absence of a Sanctuary permit. Installing and operating LNG terminals within CINMS would likely involve such activities. If an LNG project applicant were to seek permits for activities that would otherwise be prohibited by CINMS regulations, it is unlikely that such a

project could meet the criteria for issuance of a CINMS permit.

The presence of the Sanctuary is recognized as important in decisions regarding permits for LNG projects in the region, and was recently cited by the Governor of California as part of his rationale for denying the Cabrillo Port LNG proposal. Any LNG project proposed outside the Sanctuary, but in the Sanctuary region, would likely be subject to consultation per section 304(d) of the NMSA, which requires that federal agency actions internal or external to a national marine sanctuary, including private activities authorized by licenses, leases, or permits, that are likely to destroy, cause the loss of, or injure any Sanctuary resource, are subject to consultation with the NMSP. This provision of the NMSA provides NOAA with the opportunity to formally recommend alternative courses of action for the applicant. NEPA, the APA, and the Deepwater Ports Act also provide opportunity for inter-agency consultation. In addition, the Sanctuary prohibition on discharging or depositing from beyond the boundary of the Sanctuary any material or other matter that subsequently enters the Sanctuary and injures a Sanctuary resource or quality would apply to discharges/deposits from LNG projects located outside the Sanctuary.

NOAA law enforcement efforts for CINMS will continue per the cooperative mechanisms currently implemented in the Sanctuary. For more detail on cooperative enforcement efforts, see the response to comment 120.

Marine Bioprospecting

179. *Comment:* In the DMP, NOAA inappropriately identified as ''marine bioprospecting'' a research project that was funded by MMS in conjunction with the University of California at Santa Barbara (UCSB) This term as used in the DMP implies a sustained removal or harvesting of a marine resource. However, the UCSB project was a limited time sampling of marine organisms on oil and gas platforms, the purpose of which was to isolate compounds with anti-cancer and anti-inflammatory potential for further research. Ultimately, the goal of any such successful compounds would be synthesis of the new drugs in laboratories rather than purification of these from collecting.

Response: The referenced project was appropriately identified as marine bioprospecting. As stated in the DMP and in the FMP, marine bioprospecting is the activity of seeking a useful application, process, or product in nature. However, NOAA has added further explanation of the MMS–UCSB research project to the FMP.

Marine Debris

180. *Comment:* The FMP's Offshore Water Quality Monitoring Strategy should include systematic monitoring of anthropogenic marine debris, per a recommendation in the Sanctuary Advisory Council's 2005 report: *A Water Quality Needs Assessment for the Channel Islands National Marine Sanctuary*.

Response: NOAA has been working and will continue to work in partnership with the marine debris researchers from the University of California Davis and the Algalita Marine Research Foundation to conduct surveys of and remove marine debris from the Sanctuary. The NOAA Marine Debris Program has supported some of this work, and CINMS staff look forward to pursuing additional opportunities to work with this Program. For more information about CINMS's future plans to address water quality issues, including marine debris, see the response to comment 303.

181. *Comment:* The impact of marine debris and derelict fishing gear on natural and cultural resources in the CINMS is not well understood and deserves to be investigated.

Response: As mentioned in the FMP's Maritime Heritage Action Plan (Strategy MH.1, Activity 2), during regular monitoring of cultural resource sites, divers will remove marine debris and derelict fishing gear when it is feasible and safe to do so. With regard to understanding impacts on natural resources, NOAA is supporting marine debris removal work within CINMS (see the response to comment 180) that is improving our understanding of the extent and potential impacts of lost fishing gear.

Marine Reserves

182. *Comment:* General support expressed for NOAA's efforts to complete the establishment of the Channel Islands MPA network.

Response: Comment noted.

183. *Comment:* A crucial data gap exists for marine reserve monitoring in that a spatially explicit data set of commercial and recreational fishing does not exist, or is poor. NOAA should analyze the potential of the Sanctuary's aerial survey program for filling this gap by providing all or part of a spatial depiction of current fishing effort.

Response: NOAA has analyzed the Sanctuary's aerial survey data, in conjunction with other spatially explicit relevant information to depict current fishing effort. NOAA provided this analysis in the FEIS on marine reserves (*http://channelislands.noaa.gov/marineres/main.html*).

184. *Comment:* NOAA should aggressively defend the NMSP's jurisdiction over the establishment and management of marine reserves within the existing Sanctuary boundaries.

Response: In 2007, NOAA completed a Final EIS and Final Rule that established a network of marine zones, including marine reserves, in the federal waters of the Sanctuary (three nmi to six nmi) (72 FR 29208).

185. *Comment:* The management plan indicates a bias toward area closures over other forms of management (see DMP strategies CS.6 and MZ.2). Closures purported to be precautionary are questionable. In addition to area closures, NOAA should consider the effectiveness of methods to attain resource protection goals, improve and recover habitat and fisheries, such as: Restricting trawling and other bottom tending gear, restricting fishing during spawning seasons, size/slot limits, bag limits, catch and release, and closure of a particular fishery for a period of time (successful with Atlantic striped bass, and Gulf of Mexico Red Drum). NOAA should also take a more comprehensive management based approach, which would protect all areas within the Sanctuary. This could include integrating the results of various research components to assist all management strategies, not just marine reserves.

Response: NOAA considered a wide range of management measures in developing the FMP and associated regulations. Marine zoning is an important and effective marine management tool that, when coupled with other management tools, provides the Sanctuary and its resource management partners a wide range of management approaches. The NMSP action related to marine reserves is addressed in a separate NEPA action, see *http://channelislands.noaa.gov/marineres/main.html*. Full consideration and review was given to existing and traditional fishery management approaches to marine resource management. NOAA determined that existing and traditional fishery management approaches are not sufficient to meet the Sanctuary's goals. The State of California reached a similar conclusion in adopting the state waters portions of the network.

186. *Comment:* Regarding strategy CS.6 (Marine Reserves Monitoring), the Pacific Fishery Management Council would be a valuable source of information on management measures

that have been successful in protection of both habitat and fisheries.

Response: Comment noted. The NMSP has consulted with the PFMC extensively and will continue to engage the PFMC for their fishery management information and expertise. The NMSP also formally consults with the PFMC on matters concerning fishing regulations and Sanctuary resources through NMSA sections 304(d) and 304(a)(5).

187. *Comment:* Regarding strategy CS.6 (Marine Reserves Monitoring), the intent of the activity entitled, ''Utilize Existing CINMS Research and Monitoring Programs in Support of Marine Reserves,'' is unclear. The programs listed in the activity are programs to document the status of all of the sanctuary. It is difficult to see how such activities ''support'' marine reserves. It also seems to imply that CINMS, prior to completing the marine reserves designation process in federal waters, expects to promote such reserves as a means to address habitat, seabird and kelp preservation.

Response: Marine reserves are expected to have both direct and indirect effects within and outside their borders. Many of the existing CINMS research and monitoring programs were originally designed to broadly measure change and gauge the overall health of Sanctuary resources. However, in some cases they can be adjusted to specifically monitor marine reserve performance as well as the sanctuary as a whole. For example, the Channel Island National Park's and PISCO's kelp forest ecosystem monitoring programs' sampling designs have been modified to increase their ability to measure change over time in marine reserves in comparison to nearby control areas.

188. *Comment:* DMP Strategy MZ.2 (Consideration of Marine Reserves and Conservation Areas) contains language in the activity that is unclear regarding the purpose of Pacific Fishery Management Council (PFMC) regulations because it seems to suggest that a marine reserve determination has already been made.

Response: Language in the DMP was not intended to suggest that a final determination about federal marine reserves designation within CINMS had been made prior to conclusion of the consultative process with the PFMC. In May 2005, NOAA presented the PFMC, per section 304(a)(5) of the NMSA, with an opportunity to prepare draft fishing regulations to meet the goals of the CINMS marine zones. Section 304(a)(5) requires that the relevant Fishery Management Council be given the opportunity to prepare draft fishing regulations within the Exclusive Economic Zone (EEZ) of the sanctuary (the CINMS EEZ is from 3 to 6 nm offshore the northern Channel Islands). The PFMC responded and recommended that fishing regulations for the CINMS marine zones in federal waters be implemented through the existing authorities of the MSA and the State of California. In November 2005, the PFMC directed its staff to work with NMFS to implement fishery closures within the CINMS zones consistent with California law.

In 2006, to mitigate fishing impacts to groundfish essential fish habitat (EFH), the PFMC approved Amendment 19 of the Pacific Coast Groundfish Fishery Management Plan that, in part, recommended designation of the CINMS as EFH and the existing and proposed CINMS marine zones as Habitat Areas of Particular Concern (which have corresponding regulations to prohibit fishing). Based on a review of the existing factual and scientific evidence, NOAA promulgated regulations prohibiting the use of bottom-contact fishing gear in these areas under the MSA.

The NMSA was used to complement the bottom contact gear prohibition and create no take zones that prohibit all other extractive activities, including fishing. The FMP has been updated to reflect the conclusion of the designation process for the Channel Islands MPA Network.

Marine Zoning

189. *Comment:* Commenter supports both activities outlined under the DMP's General Marine Zoning Strategy (MZ.1).

Response: Comment noted. This strategy is now RP.3 in the FMP's Resource Protection Action Plan.

190. *Comment:* The management plan's Marine Zoning Action Plan should provide a spatial representation of all restrictions/zones, and regulations with a spatial feature in the Sanctuary.

Response: NOAA has augmented the discussion of existing zones within the Sanctuary in the FMP's Resource Protection Action Plan (Strategy RP.3 background section). Although NOAA agrees that a spatial database of various marine zones, data, and features is important and useful for Sanctuary management, a map that attempts to show the complex spatial management and regulatory regimes within CINMS would be overwhelming and complicated to display, and may not prove useful for coastal managers or the general public. NOAA has been developing a spatial database of management zones within and adjacent to CINMS, as well as biological and socioeconomic monitoring activities.

191. *Comment:* NOAA should consider using marine zoning for: Derelict/abandoned fishing gear, vessel traffic, light pollution, corals and structure-forming organisms, and bottom-tending fishing gear.

Response: Bottom-tending fishing gear is now prohibited within the marine zones designated as marine reserves and marine conservation areas in the Sanctuary. NOAA is not establishing additional marine zones to address the remainder of the issues mentioned at this time for reasons including insufficient information available to support such action, non-zoning measures already in place, or pre-existing zones. NOAA does, however, regard marine zoning as an important tool for consideration and application where appropriate. As described in the FMP's Resource Protection Action Plan, NOAA will identify, track, and where appropriate, respond to Sanctuary resource protection issues. For some issues, the evaluation process may include consideration of marine zoning, where appropriate.

Military Activities

192. *Comment:* The Department of Defense should not continue to be exempt from CINMS rules because it has a bad record of disturbing, harming, and killing endangered species with underwater sonar, which should not happen in the Sanctuary.

Response: The NMSP works closely with NMFS regarding assessment of the potential impacts of DOD activities on Sanctuary resources, and how DOD should address such potential impacts. As the revised CINMS regulations state, in the event of destruction of, loss of, or injury to a Sanctuary resource or quality resulting from an incident, including, but not limited to, discharges, deposits, and groundings, caused by a DOD activity, DOD, in coordination with the Director, must promptly prevent and mitigate further damage and must restore or replace the Sanctuary resource or quality in a manner approved by the Director. Furthermore, all DOD activities must be carried out in a manner that avoids to the maximum extent practicable any adverse impacts on Sanctuary resources and qualities.

193. *Comment:* NOAA should remove the exception for military vessel discharge of sewage and sewage sludge from the discharge prohibition.

Response: NOAA has determined that the regulation of DOD vessel discharges by section 312(n) of the FWPCA (Clean Water Act) is sufficient at this time.

Mineral Activities

194. *Comment:* Commenter supports the proposed prohibition on mining activities within the Sanctuary.

Response: Comment noted.

Motorized Personal Watercraft (MPWC)

MPWC—Inappropriate Use of Studies

195. *Comment:* Studies cited and information used to support the proposed MPWC prohibition were outdated, inaccurate, of poor quality, biased, and/or from locations other than the Channel Islands.

Response: NOAA consulted a variety of sources in developing the prohibition on MPWC operation within one nmi of the Channel Islands. The sources comprise available literature on MPWC impacts, as well as existing enforcement data from CINP Rangers and other enforcement agencies. NOAA is not aware of any MPWC impact studies conducted in the Channel Islands. This is not surprising, given that the National Park Service has banned the use of MPWC in the Channel Islands since 2000. Given this lack of site-specific data for MPWC impacts, the data and observations from other locations (including the Monterey Bay National Marine Sanctuary) are relevant to CINMS, especially data on flushing of nesting birds and disturbance of marine mammals. NOAA has received written and oral reports of MPWC users disturbing sea otters, harbor seals, porpoises, dolphins and other wildlife in various areas of the Monterey Bay National Marine Sanctuary since implementation of the regulation in 1993. Sometimes, due to high surf conditions, operators are unaware of their disturbance of wildlife.

196. *Comment:* In citing information from the Massachusetts Office of Coastal Zone Management Personal Watercraft Management Guide (MOCZM 2002), CINMS irresponsibly selected particular passages that support a PWC ban, from a document that advocates managing PWC use and provides much data to support management tactics short of bans. In addition, the MOCZM document was published in 2002 and could not, at that time, include the most up-to-date technological innovations. CINMS should seek the most current, accurate and peer reviewed data.

Response: Regarding the MOCZM document advocating managing MPWC use, this document proposed a variety of different management techniques regarding MPWCs, including an outright ban for particularly sensitive or difficult enforcement areas. CINMS fits both of these criteria, with many rare, endangered or sensitive species and a remote environment which makes behavior-based enforcement impossible without extensive enforcement resources. Moreover, CINMS is not banning MPWC throughout the Sanctuary, but only in the sensitive nearshore zone from zero to one nmi offshore. The amount of scientific research conducted on the topic of MPWCs and wildlife disturbance has not increased significantly since 2002. However, additional information on MPWC use was added to the FEIS Affected Environment, Human Uses, Nonconsumptive Recreation and Tourism section on Motorized Personal Watercraft for revisions.

MPWC—Against Ban

197. *Comment:* NOAA should not prohibit MPWC from operating within one nautical mile of the Channel Islands.

Response: As explained in the response to comment 200 NOAA believes that the Sanctuary prohibition on MPWCs within one nautical mile of the Channel Islands will assist in achieving the NMSP's primary mandate of resource protection. Because the NPS already prohibited MPWC operation within one nautical mile of the islands in 2000, the Sanctuary MPWC prohibition will not result in adverse socioeconomic impacts. NOAA does not prohibit any individuals from visiting the Sanctuary or the Islands, and this prohibition is not designed to keep some members of the public from doing so.

198. *Comment:* NOAA should not ban MPWC use beyond one nmi in the Sanctuary because this would prohibit MPWC use at a known tow-in surfing location.

Response: NOAA is not prohibiting MPWC use beyond one nmi. NOAA is aware of tow-in surfing activities off San Miguel Island; however, the tow-in surfing location is beyond one nmi and as such would not be affected by the Sanctuary prohibition.

MPWC—Behavior

199. *Comment:* NOAA should address/prohibit unacceptable MPWC operator behavior, and/or wildlife disturbance (except for fishing) rather than prohibit MPWC use.

Response: NOAA is not considering the ideas suggested as an alternative to the prohibition on MPWC use within one nmi of the Channel Islands because the use of MPWC in this zone has already been prohibited by the NPS since 2000.

MPWC—Duplicative Regulation

200. *Comment:* NOAA should not duplicate the existing NPS regulation that prohibits MPWC operation within one nmi of the Channel Islands.

Response: The use of MPWC within one nmi of the Channel Islands has been prohibited by the NPS since 2000. NOAA is mirroring the existing MPWC prohibition to provide an added deterrent to illegal MPWC use within the nearshore areas of the CINMS and CINP (the CINMS regulation carries a maximum civil penalty of $130,000 per incident, per day). The CINMS MPWC prohibition provides an additional legal authority through which to prosecute violators of the MPWC prohibition.

MPWC—Environmental Impacts

201. *Comment:* NOAA's characterization of MPWCs as producing high emissions, being noisy, and/or being hazardous to the ocean and environment is incorrect. New MPWC designs are clean and quiet.

Response: The MPWC industry has reduced noise and emissions with 4-stroke engines, and NOAA has revised the description of MPWC in the DEIS. See the updated FEIS Affected Environment, Human Uses, Nonconsumptive Recreation and Tourism section on Motorized Personal Watercraft for revisions. However, NOAA is not aware of studies that have demonstrated the extent to which these improvements have reduced wildlife disturbance. NOAA's prohibition on the operation of MPWC within one mile of the islands is due primarily to the potential for wildlife disturbance rather than concerns about emissions. While emissions and noise from MPWC have been reduced, it is not clear that they are now insignificant. NOAA is still concerned about the effects of oscillating sound caused by persistent throttling of the engine during repeated acceleration/deceleration within the surf zone, which is often necessary to avoid capsizing and rolling. Research and observations have shown that this frequent oscillating sound pattern is particularly disruptive to wildlife. Finally, NOAA is unaware of information indicating the immediate breakdown of oil from MPWCs.

202. *Comment:* MPWCs have less of an impact on kelp and aquatic vegetation than do other vessel types, as discussed in the Massachusetts Office of Coastal Zone Management Personal Watercraft Management Guide (MOCZM 2002).

Response: The potential for damage to aquatic vegetation is reduced in MPWCs as compared with that for propeller

driven vessels. However, the referenced document (MOCZM 2002) also makes the following statement about PWC operation: ''However, PWC are frequently operated in ways that enhance their capacity to damage seagrass communities. For example, PWC are often used in shallow water areas, where their jet wash is more likely to kick up sediments. PWC also tend to kick up more sediment when operators are performing acrobatic maneuvers, traveling at slower speeds or rapidly accelerating. These activities tilt PWC back into the water column and direct their jet wash downward into underlying sediments and seagrass beds. PWC-related seagrass damage may also be exacerbated if PWC operation is spatially and/or temporally concentrated. Multiple PWC circling about in that same vicinity may have a greater impact than a single PWC traveling through the same area.'' With respect to MPWC impacts on kelp beds, the enclosed propulsion system of MPWC will not cut through kelp as will vessels with conventional outboard motors. The EIS text referring to impacts on kelp has been revised to reflect this information.

203. *Comment:* The National Park Service EIS's on personal watercraft use found that these craft cause no adverse or lasting impact. NOAA's EIS did not discuss the National Park Service's findings.

Response: There are 21 units in the national park system (generally national recreation areas or national sea/lakeshores) where the legislative purpose of the unit may permit use of MPWCs. In those units which have considered authorization of MPWC use, impacts were identified and requirements identified to mitigate the impacts to acceptable levels for those units. These findings were site-specific and generally included substantial limits on the operation of MPWCs.

However, the NPS, via regulation, has determined that MPWC use is generally inappropriate in units of the National Park system due to likely ecological or visitor impacts. Under NPS regulations finalized in 2000 and revised in March 2007 (36 CFR sec. 3.9(a)), Channel Islands National Park is closed to MPWC use.

MPWC—Extend Ban Beyond 1 NMi Offshore

204. *Comment:* NOAA should extend the prohibition beyond one nmi to include the entirety of CINMS waters (i.e., six nmi from the Islands), consider prohibiting MPWC use in certain sensitive areas outside the one nmi limit, such as near emergent rocks or other resource-attracting features, or consider a temporal ban on MPWC outside of one nmi to protect pinnipeds and birds.

Response: NOAA is not extending the prohibition on MPWC beyond one nmi of the Islands (defined in the CINMS terms of designation as San Miguel Island, Santa Cruz Island, Santa Rosa Island, Anacapa Island, Santa Barbara Island, Richardson Rock, and Castle Rock) at this time, and believes that the one nmi ban provides the appropriate level of compatible use consistent with the protection of Sanctuary resources. The new prohibition on taking a marine mammal, sea turtle or seabird allows sufficient enforcement flexibility for activities occurring outside the one nmi MPWC ban area. Additionally, overlaying the existing CINP ban provides important benefits for cooperative enforcement. NOAA, in conjunction with the CDFG and other partners, will continue to monitor the use of MPWC within other areas of the Sanctuary. If this monitoring indicates adverse impacts to wildlife or other Sanctuary resources, NOAA could consider additional management actions as part of an adaptive approach to managing the Sanctuary. Any future regulatory actions taken by NOAA would be subject to the appropriate environmental analysis under the National Environmental Policy Act (NEPA) and public review and comment per the requirement of the Administrative Procedure Act.

MPWC—Other

205. *Comment:* NOAA is focusing too much on the semantics of the definition of a Motorized Personal Watercraft.

Response: As explained in the FEIS, the CINMS regulations provide a definition of MPWC that is the same as that used by the NPS. This is important so that the CINMS regulation is consistent with the NPS ban on MPWC use in effect in the Channel Islands.

206. *Comment:* The process leading to the creation of the MPWC prohibition did not allow for public input, and/or NOAA should consult with more state officials, emissions experts, manufacturers, and actual users, before committing to such a ban.

Response: Per requirements of the National Marine Sanctuaries Act, the National Environmental Policy Act, and the Administrative Procedure Act, NOAA has followed federal requirements for notifying, and soliciting input from, the public, along with relevant state and federal agencies about the MPWC prohibition and all other actions that are part of the CINMS management plan review. Public input on the management plan has been extensive through the Sanctuary Advisory Council, public hearings, and the public comment period.

207. *Comment:* MPWC owners are cautious, use good judgment, and are considerate of the environment, and/or the demographics of MPWC owners have shifted to ''a little older, more affluent and more responsible person.''

Response: Despite the changes in MPWC user demographics described by the commenters, NOAA believes that the prohibition will assist CINMS in achieving its primary mandate of resource protection. Furthermore, the use of MPWC within one nmi of the Channel Islands has been prohibited by the NPS since 2000.

208. *Comment:* The plan does not mention that as of 2004 the California Air Resource Board (CARB) has prohibited the sale of two-stroke marine engines. There are no two-stroke engines being sold of any kind for marine use.

Response: NOAA is not aware of any CARB regulation banning the sale of two-stroke engines. CARB did restrict the type of two-stroke engine to only direct injection as of 2001. In addition there are many pre-2001 two-stroke powered MPWC in operation and there are no prohibitions on the use, replacement, or resale of the older carbureted or non-direct injected two-stroke engines in these craft.

209. *Comment:* NOAA should explain why it is prohibiting Personal Watercraft, when the agency seems to realize the benefits of these type of boats for emergency response and law enforcement.

Response: NOAA notes a distinction between recreational use and emergency response/enforcement. There is a tradeoff between potential environmental impacts and the benefit of emergency response and enforcement. The prohibition on MPWC use does not apply to (1) an activity necessary to respond to an emergency threatening life, property, or the environment; and (2) an activity necessary for valid law enforcement purposes in the Sanctuary. For a response to commenters who indicated that they are opposed to the Sanctuary's MPWC regulation, see the response to comment 197.

210. *Comment:* NOAA should have reasonable boating regulations such as the generally applicable access restrictions, closures and boating rules set forth in existing Sanctuary regulations, and/or regulations that require an age limit, educational program, and a licensing system for MPWC use; or NOAA should establish

best management practices to resolve problems with MPWC use.

Response: Given that the use of MPWC within one nmi of the Channel Islands has been prohibited by the NPS since 2000, NOAA is not considering the ideas suggested as an alternative to the prohibition on MPWC use in this zone. Regarding rider age limits and licensing systems, these are boating safety and registration issues more appropriately managed by State and Federal boat licensing agencies.

211. *Comment:* Based on the definition of personal watercraft in the DEIS, it appears that the intent of the MPWC prohibition is not to regulate fishing. If this is correct, the prohibition does not directly affect fishing, fishing vessels, fish stocks, or fish habitat.

Response: While the intent of this regulation is not to regulate fishing per se, it does prohibit the use of MPWC within one nmi of the islands, even if the MPWC were being used to conduct an otherwise lawful fishing activity.

212. *Comment:* NOAA should implement boater education programs to reduce MPWC accidents and injuries, which would render the ban on MPWC unnecessary.

Response: Education and safety regulations can increase MPWC safety. However, the intent of the one nmi prohibition is primarily to protect wildlife, and the existing NPS ban eliminates the utility of an educational program for MPWC operators in that zone. NOAA would consider partnering with another agency or organization for the purposes of developing educational programs to address MPWC use from one nmi to six nmi offshore in the sanctuary, should circumstances warrant it. NOAA welcomes input from the California Department of Boating and Waterways and the California Boating and Waterways Commission on education and outreach for MPWC users and all boaters regarding the Sanctuary.

213. *Comment:* NOAA should explain how the one mile limit for the MPWC prohibition was determined.

Response: NOAA believes that the one nmi limit is reasonable for preventing wildlife disturbance from MPWC in the sensitive nearshore area of the Sanctuary, especially considering the number of emergent rocks within the one nmi offshore zone of the islands. Additionally, this zone directly overlays the existing National Park Service ban on MPWC within Channel Islands National Park, facilitating cooperative enforcement of both the NPS and NOAA MPWC regulations.

214. *Comment:* The California Department of Boating and Waterways (CDBW) commented that they would be happy to help CINMS staff in delivering a message to the boaters that they come into contact with.

Response: NOAA looks forward to working with the CDBW on boater and MPWC education and outreach and has benefitted from partnering with the CDBW and others involved in the California Ocean Communicators Alliance ''Thank You Ocean'' campaign. The CDBW featured this campaign in an article in its April 2007 Changing Tide newsletter, including campaign advertisements and logos on the front and back cover of the issue. In recognition that 8,200 copies of this newsletter are circulated to marinas, yacht clubs, boat supply stores, boat repair facilities, other state agencies, clean boating network members, boat shows and events, NOAA greatly appreciates opportunities to partner with CDBW to conduct outreach to boaters. NOAA also appreciates the CDBW assistance with distribution of a CINMS boater safety brochure to registered boat owners throughout Ventura County, and looks forward to partnering on future boater outreach.

215. *Comment:* NOAA should keep the waterways open for responsible public use.

Response: This action keeps the Sanctuary open for all public uses compatible with the CINMS's primary objective of resource protection, and not prohibited pursuant to other authorities.

MPWC—Other Agencies Regulate Boating

216. *Comment:* The CDBW was not consulted or asked to participate during the planning process. NOAA should have also consulted with the U.S. Coast Guard because they have the authority to promulgate regulations regarding recreational boats in federal waters.

Response: NOAA provided scoping and noticing of this action in accordance with NEPA, APA, and NMSA requirements. The U.S. Coast Guard and the California Resources Agency (the parent agency of the CDBW) each hold seats on the CINMS Sanctuary Advisory Council, and as such have been aware of and involved in this management plan development since its inception. In addition, prior to release of the DMP and DEIS, the NMSP's West Coast Region informed the California Boating and Waterways Commission of plans to consider an MPWC regulation at CINMS. NOAA remains open to working with the CDBW in the Channel Islands on topics of mutual interest in the future. Regarding consultation with the U.S. Coast Guard and enforcement, in addition to its involvement throughout the management plan review as an agency member of the Advisory Council, the USCG is also a Sanctuary cooperative enforcement partner. NOAA believes that the USCG is well suited to help enforce CINMS regulations, including the prohibition on MPWC, and as such CINMS coordinates enforcement with the USCG and other enforcement agencies.

217. *Comment:* The California Department of Boating and Waterways and the U.S. Coast Guard have the authority to regulate boating. Any federal regulations related to recreational boating (i.e., MPWC use) proposed in the management plan should be adopted, if needed, by the U.S. Coast Guard, the federal agency with historical boating expertise and appropriate enforcement responsibilities.

Response: Although boating regulations could be developed by another agency, such as the USCG, NOAA thinks that in this case using Sanctuary authority would be the most efficient and logical means of achieving enhanced Sanctuary protection. Additionally, this regulation is an overlay of an existing National Park Service ban. NOAA works cooperatively with the NPS, USCG, and CDFG to enforce Sanctuary regulations, including regulations pertaining to recreational boaters that have been in effect for over twenty-five years. NOAA is interested in exploring opportunities for CDBW to assist with marine enforcement within the state waters portion of the Sanctuary.

MPWC—Penalty

218. *Comment:* The maximum penalty of $130,000 for violation of the Sanctuary's MPWC prohibition is too high. Given this high fine, NOAA should mark the one nmi boundary with buoys and signs about the prohibition.

Response: The penalty of $130,000 is a maximum penalty for any violation as decided upon by Congress during the authorization and subsequent reauthorizations of the National Marine Sanctuaries Act. The actual penalties levied for NMSA violations vary in proportion to the severity of the incident and other case-specific factors. NOAA's Office of General Counsel for Enforcement and Litigation establishes a penalty schedule that outlines recommended penalties for violations under the NMSA. This penalty schedule provides notice to the public and provides guidance to the prosecutors as to a general range of penalties for specific violations. The penalty schedule reflects sanctions that NOAA believes will encourage compliance and

deter violations; however, in every case, NOAA retains the ability to assess a penalty up to the statutory maximum of $130,000. The NMSA penalty schedule is publicly available and can be accessed through this link: *http://www.gc.noaa.gov/schedules/58-NMSA%20Penalty%20Schedule%209-06.pdf*.

It is the responsibility of Sanctuary users to know where they are within the Sanctuary, and what laws and regulations apply in a given area. CINMS education and outreach materials are designed to help users understand regulations. Physical signs can enhance awareness and compliance, but it is neither logistically nor financially feasible for NOAA to install a system of signs along the one nmi boundary warning of the MPWC ban.

MPWC—Relation to Other Boats

219. *Comment:* The MPWC prohibition unfairly singles out and/or discriminates against MPWC, especially in terms of described environmental impacts, and/or access rights or regulations.

Response: NOAA has already established a precedent for regulating some users, such as large vessels and aircraft, differently than others in the one nmi offshore zone due to concerns about their potential impacts. NOAA acknowledges that MPWC are not alone in their potential for wildlife disturbance. However, scientific research and studies across the United States (e.g. California, New Jersey, Florida) have produced strong evidence that MPWC present a significant and unique disturbance to marine mammals and birds different from other watercraft. Though some other studies have found few differences between MPWC and small motor-powered boats, they have not presented evidence to invalidate the studies detecting significant impacts. In 1994, NOAA commissioned a review of recreational boating activity in the Monterey Bay NMS. The review provided statistics on MPWC use and operating patterns in the Sanctuary at the time and identified issues of debate from the research community regarding MPWC impacts on wildlife, but it made no formal conclusion or recommendation. At this time, NOAA has determined that the unique properties and operating characteristics of MPWC (which allow for high speed, repetitive nearshore operations, and are further described in the FEIS) make them prone to present a significantly higher risk of wildlife disturbance than other vessel types. As such, NOAA thinks that MPWC are incompatible with resource protection within the one nmi offshore zone of the Sanctuary. Operation of MPWC in the CINMS is still allowed outside of the one nmi offshore area.

Regarding comments asserting that MPWC should be regulated in the same manner as other boats, NOAA believes that for other types of boaters, and for MPWC operating beyond the one nmi offshore zone, enforcement of the restrictions presented in Prohibition 9 (Taking a Marine Mammal, Sea Turtle or Seabird) provide for sufficient resource protection at this time. However, NOAA could in the future propose additional restrictions on other Sanctuary users, with public input and review, should protecting Sanctuary resources warrant such action. With regard to MPWC rights to access, please note that the MPWC regulation overlays an existing NPS ban on MPWC use within one nmi of the islands that has been in place since 2000. Neither the NPS nor CINMS regulations ban MPWCs for a six mile area surrounding the park. Rather, both ban MPWC use only in the one nmi offshore zone. Concerning emissions and water quality issues among MPWC and other boats, NOAA's objection to the operation of MPWC within one mile of the islands is due more to their potential for wildlife disturbance than concerns about emissions (see also the response to comment 201). In terms of whether or not there are differences in engine types between MPWC and other craft, the justification for the prohibition is not related to the engine type, but rather to the craft's unique capabilities and use patterns.

For information about NOAA's use of the best available information as it relates to the rationale for this prohibition, see response to comment 195.

MPWC—Support Ban

220. *Comment:* NOAA should prohibit the use of MPWC within one nmi from the islands, as proposed in the preferred alternative.

Response: NOAA is implementing the preferred alternative MPWC regulation.

Nearshore Vessel Approach

221. *Comment:* NOAA should adopt the nearshore vessel approach prohibition in Alternative 1 in order to: Reduce the risk of grounding and collision accidents; to provide additional protection for sensitive near-shore areas; exclude a greater number of potentially harmful large vessels (those 150 GRT or more) than the Proposed Action (those 300 GRT or more); and reduce the likelihood of discharges and other impacts from relatively large vessels, including cruise ships. Additionally, NOAA should provide an exception allowing large vessels to operate in the shipping lanes.

Response: Like Alternative 1, the Proposed Action directly addresses the NOAA's concern that, with limited exceptions, large vessels should not approach and put at risk sensitive nearshore areas of the Sanctuary. NOAA is not aware of more than a few vessels between 150 to 299 GRT that occasionally visit the Sanctuary area within one nmi of the Islands. Using Automated Identification System (AIS) data, which will soon be available for the entire Sanctuary, NOAA plans to enhance vessel traffic monitoring in the nearshore area. If the number of vessels between 150 to 299 GRT increases significantly, and/or the incident of vessel accidents increases, NOAA can revisit this regulatory issue. Cruise ships are typically much larger than 300 GRT, and industry trends show increasing vessel sizes. The shipping lanes do not come within one nmi of Island shores, and thus an exception allowing large vessels to operate in the shipping lanes is not necessary.

222. *Comment:* NOAA should remove the fishing vessel exception to the nearshore vessel approach regulation under both the Proposed Action and Alternative 1. Additionally, NOAA should assess the costs and benefits of removing the exception for fishing vessels of these sizes, including the regulatory burden of gaining a permit for such activity, and the rationale for the exception.

Response: NOAA is not removing the nearshore vessel approach regulation's exception for fishing vessels at this time. NOAA is not aware of fishing vessels greater than 150 GRT using Sanctuary waters, including within one nmi of the Islands, nor aware of any emerging fisheries trends suggesting that vessels of this size are planning to use Sanctuary waters. Using AIS data, which will soon be available for the entire Sanctuary, NOAA will enhance vessel monitoring in the nearshore area. NOAA also monitors vessel use of the Sanctuary via aerial surveys. Should fishing vessels 150 GRT begin to use the Sanctuary, NOAA can revisit the associated risks and determine how to address them.

NOAA does not believe that the requirements for obtaining a permit are burdensome. Sanctuary staff regularly process a variety of permits and work to maintain an efficient and streamlined process. Furthermore, few vessels that routinely visit the Channel Islands nearshore area are 300 GRT or more.

223. *Comment:* Support is expressed for the Proposed Action alternative's

modification of the nearshore vessel approach regulation to prevent large (300 GRT or more) non-fishing vessels from traveling within one nmi of island shores in the Sanctuary.

Response: Comment noted.

224. *Comment:* NOAA should not limit the large vessel nearshore approach prohibition to one nautical mile from island shores, but instead should expand it to the Sanctuary's outer boundary.

Response: The International Maritime Organization has already designated the majority of the Sanctuary, excluding the portion that overlaps the TSS, as an Area To Be Avoided (ATBA). NOAA seldom observes large vessels within the ATBA, and as such NOAA has not deemed it necessary at this time to prohibit large vessel use beyond one nmi from the Islands.

225. *Comment:* NOAA should completely ban cruise ships inside the Sanctuary's six nautical mile boundary because of poor dumping practices.

Response: CINMS regulations prohibit cruise ships 300 GRT or more (cruise ships are typically much larger than 300 GRT) from approaching within one nmi of the Islands, and prohibit them from discharging sewage and graywater in the Sanctuary. Based upon the best available information, NOAA has determined that it is not necessary to ban cruise ships within the entire Sanctuary at this time.

Oil and Gas

226. *Comment:* NOAA should continue to prohibit any oil and gas development within the Sanctuary given the short- and long-term human and environmental impacts from oil spills, and the relatively high probability that they will occur. NOAA should also take necessary measures to protect Sanctuary resources from oil development in the surrounding region.

Response: NOAA is maintaining the prohibition on exploring for, developing, or producing hydrocarbons within the Sanctuary. NOAA also comments on oil and gas related projects in the region that have the potential to affect Sanctuary resources.

227. *Comment:* Commenter supports the Proposed Action Alternative's prohibition 1 on oil and gas that maintains current prohibitions on oil and gas development while removing outdated exemptions.

Response: Comment noted.

Performance Evaluation

228. *Comment:* The Conservation Science Action Plan's performance measures should include not only funding levels and quantitative measures of monitoring and research efforts, but metrics of a given activity's completeness, efficiency and quality.

Response: The FMP's Performance Evaluation Action Plan contains performance targets for all eight of the Conservation Science Action Plan's strategies, all of which address at least one of the criteria identified by the commenter (completeness, efficiency, and quality). As CINMS staff implement the management plan, these targets may be updated or modified to more clearly articulate these criteria, and to more closely align the specific CINMS performance targets with those identified for the national program (there are currently 21 program performance measures for the NMSP).

229. *Comment:* Requirements for specific quantitative performance measures may impede CINMS's ability to implement programmatic and regulatory improvements that may have more qualitative benefits.

Response: CINMS staff have developed both quantitative and qualitative performance targets for the strategies in each of the FMP's action plans. Quantitative performance targets are typically used to track outputs (or products), but may also be used to identify certain qualitative achievements (such as the percentage of increased knowledge within a particular user group). Performance targets are developed in response to, rather than as an impetus for, identification of a management activity. In other words, sanctuary-specific performance targets do not ''drive'' the development of management activities; rather, they are the means by which a sanctuary tracks it progress towards the achievement of sanctuary-specific and NMSP goals and objectives. As such, NOAA does not believe that quantitative performance targets will impede development of any regulatory or non-regulatory management actions that may have qualitative benefits for CINMS.

230. *Comment:* The management plan should include a baseline water quality characterization, and its Performance Evaluation Action Plan should include a performance metric that actually measures whether Sanctuary water quality is being improved via physical measurements of pollution levels and environmental health.

Response: Strategy WQ.2 includes an activity to complete a CINMS water quality characterization report. Regarding water quality performance metrics, since revision of the CINMS management plan began, the NMSP has developed a set of program level performance measures that set management targets for the sanctuary system. One of these targets is the ''Number of sites in which water quality, based on long-term monitoring data, is being maintained or improved.'' Criteria for measuring this target have been developed through the NMSP's conservation science program, and a tracking plan for how each sanctuary will meet these criteria has been implemented across the system. CINMS staff are currently working to provide Sanctuary-specific data on these criteria, which will eventually be included in a system-wide report on the status of NMSP performance targets.

231. *Comment:* Sanctuary goals are lacking an MOU for procedural review of the protection at CINMS that defines data gaps, survey design and data streams connected to budgets that facilitate management decisions. CINMS has no functional management culture that can assess the status of the resources to use as a foundation for working with the fishing community. It is not bound by any peer review protocol or data management performance criteria.

Response: The FMP's Conservation Science Action Plan identifies the myriad ways in which NOAA and its partners have collected, and continue to collect, assess, and apply, information on the status of CINMS resources. Although no general MOU exists between CINMS and its partners on research in the Sanctuary, there are a variety of MOUs planned or in place for specific research and management activities (such as implementation of the marine reserves). In addition, MOUs are often not needed for collaboration on management and monitoring of marine resources with many agencies and organizations—for example, CINMS collaborates extensively with NMFS, and existing statutes allow for extensive coordination with the Pacific Fishery Management Council. Identifying data gaps and survey design are an inherent part of nearly all CINMS research initiatives and decisions to implement any research project are always linked to budgetary considerations. With regard to performance criteria, see the response to comment 230 for an example of how the NMSP is moving forward on this issue.

Permits

232. *Comment:* NOAA has recently dramatically improved the scientific research permitting process. The process is straightforward and reasonably quick, much improved over the past.

Response: Comment noted.

233. *Comment:* NOAA should provide transparency for the CINMS permit

process, including provisions for public notice, review and comment on issuance and monitoring of Sanctuary permits.

Response: NOAA does not currently envision a public notification and review provision for all CINMS permits. Existing NMSP regulations (15 CFR 922.48) identify the permit issuance criteria for all national marine sanctuaries, which provide a rigorous set of parameters under which NOAA can permit an activity that is otherwise prohibited. It should be noted that when receiving a permit application, the CINMS Superintendent may request additional information from the applicant and, if appropriate, may hold a public hearing to obtain more information. If a permit holder acts in violation of the terms and conditions of any permit, NOAA may amend, suspend, or revoke the permit. Projects that would result in the preparation of an environmental impact statement under the National Environmental Policy Act would be subject to public review and comment.

234. *Comment:* If a permit applicant will be using vessels for hire or soliciting related assistance for his/her proposed project, NOAA should require the applicants to use appropriately licensed vessels and operators.

Response: Individuals or entities conducting activities under a CINMS permit must still comply with all federal, state and local laws and regulations that are applicable to that activity.

235. *Comment:* In the FMP NOAA should provide an explanation or examples of what types of research would and would not require a permit.

Response: NOAA has updated FMP Strategy OP.2 (Permitting and Activity Tracking) with examples of the types of research and other activities that do and do not require a Sanctuary permit.

Research and Monitoring

236. *Comment:* The Channel Islands National Marine Sanctuary has an admirable scientific research program, primarily in partnership with colleges and universities in the area. This scientific research should be continued and expanded to increase understanding of the unique ecosystem of the Santa Barbara Channel and Channel Islands.

Response: CINMS research staff continue to look for opportunities to build partnerships and collaborate on research. Through research outreach efforts, such as presentations at conferences and workshops, publication of scientific papers, and distribution of reports, staff inform the research community of our efforts and needs. CINMS staff also solicit research projects in the Sanctuary through our request-for-vessel process while continuing to identify funding opportunities through grants and partnerships.

237. *Comment:* The management plan properly identifies the importance of data management and dissemination to the overall effectiveness of the Conservation Science Action Plan. It also addresses the highly collaborative and partnership-based nature of the biological research process and the need for extensive collaboration with partners at other agencies and entities.

Response: Comment noted.

238. *Comment:* NOAA should find additional funding for monitoring programs so that the scientific community does not lose its integrity by not being able to fulfill monitoring requirements. The funding amount for Conservation Science Action Plan should be increased at least two-fold, to match the level of funding dedicated to Education and Outreach. NOAA should also fund structural support for the cooperative research program.

Response: NOAA recognizes that resource limitations as well as the necessary program and partner developments may limit implementation of all of the activities in the management plan, including the Conservation Science Action Plan. NOAA will continue to work with the Department of Commerce, Office of Management and Budget, and Congress in developing supporting justifications when preparing budget submissions. Sanctuary staff will continue to look for opportunities for funding through other federal programs, private grants, and partnerships with agencies, universities, and private and non-profit organizations. NOAA supports the cooperative research program and will fund it as the CINMS budget allows, including through the funding opportunities listed above. Estimated costs shown for the Conservation Science Action Plan and the Public Awareness and Understanding Action Plan are not directly comparable. The Conservation Science Action Plan budget does not include contributions from partners and collaborators, nor does it include the large amount of funding to staff and operate vessels, which is estimated in the FMP's Operations Action Plan. In addition to these contributions, NOAA continues to seek additional funding opportunities as listed above. NOAA has also revised some of the cost estimates for Conservation Science Action Plan strategies.

239. *Comment:* NOAA should prioritize science relevant to management and apply it to existing and emerging resource protection issues. The Conservation Science Action Plan should include an explicit goal for the application of scientific research to the understanding and mitigation of identified or emerging threats. NOAA should consider how it can best orient its scientific research programs to better translate research results to management decisions.

Response: NOAA recognizes that sanctuaries should ensure that their research and monitoring programs are effectively prioritized to produce scientific information that can be applied to the understanding, mitigation, and management of identified or emerging threats. Through the NMSP's System-Wide Monitoring Program (SWiM) reports, CINMS staff will provide status updates on the condition of Sanctuary resources to local, regional, and national policy makers. The NMSP holds an annual research coordinators' meeting at which research staff discuss research issues and needs across the program. The ONMS West Coast Region coordinates research and monitoring efforts within the region to address regional management and resource protection issues.

The purpose of the research department at CINMS is to support management decision making with conservation science. NOAA has emphasized this point in the FMP's revised Overview to the Conservation Science Action Plan. CINMS research staff regularly collaborate with partners, including other federal and state agencies, universities, private institutions, and non-profit agencies. The Research Activities Panel, a working group of the Sanctuary Advisory Council, provides oversight to the monitoring programs in the Sanctuary. The status of monitoring programs is reported to regional and national offices through internal documents.

240. *Comment:* Overall research/science coordination and data management are important, necessary, and the greatest conservation science needs within the Sanctuary.

Response: CINMS research staff coordinate conservation science by being in close contact with researchers, tracking and requiring updates on their research activities, and working with joint-jurisdiction agencies. Staff also develop research partnerships to address research gaps, and receive input from the RAP on research and monitoring activities.

CINMS staff continue to strive towards better research coordination and comprehensive data management as funding and staffing allows.

241. *Comment:* Sanctuary Aerial Monitoring Spatial Analysis Program (SAMSAP) graphical data must be included in the online database architecture proposed in DMP Strategy CS.2, and become publicly available.

Response: SAMSAP data have been, and continue to be, analyzed and used in a wide variety of spatial and statistical projects ranging from marine zoning to emergency response applications. The majority of SAMSAP data are already in a format easily importable into a variety of common database formats. As noted in the revised Strategy CS.2, rather than developing a new online database, CINMS will work with regional partners already running established web-based data warehouses to identify the most appropriate data warehouses to best disseminate particular data types. The end result will make SAMSAP data available and integrated with the publicly-accessible Sanctuary Integrated Monitoring Network (SIMoN, *http://www.sanctuarysimon.org)* that will be expanded to CINMS.

242. *Comment:* Many existing programs (e.g., SAMSAP) could be used to meet a greater variety of research needs. The CINMS Research Coordinator should take an active role in expanding or redirecting internal CINMS research activity and make strategic decisions about the allocation of Sanctuary support among existing external research programs.

Response: CINMS research staff use the Management Plan and other annual research prioritization documents to set priorities and direct and fund CINMS research activities. In recent years SAMSAP data have been analyzed and are now being used, among other things, in socioeconomic impact studies related to marine zoning.

243. *Comment:* The Conservation Science Action Plan's Comprehensive Data Management strategy does not include enough analysis and synthesis to help formulate a general research plan. Data management must be more than a simple means to provide information to the public and others; it should reveal important gaps and trends, and can be used strategically to guide future research and to answer specific questions mandated by reviewing agencies.

Response: Data management can be used strategically to guide future research and to answer specific questions. The FMP's comprehensive data management strategy is focused on integrating CINMS data into existing regional and national data management programs to facilitate enhanced conservation science-based decision-making. While this strategy focuses on data management, inherent in the Resource Protection Action Plan is a need to analyze data. Complementing the data management strategy, the FMP's Resource Protection Action Plan identifies a variety of current and emerging resource protection issues and it is expected that for each issue a number of science-based questions may emerge. Answers to these questions will guide and drive data analysis activities and research planning in a manner consistent with the comment. Thus, data analysis and synthesis occur as part of management plan implementation, and are also manifested in Sanctuary annual operating plans, as well as through annual research vessel allocation decisions.

244. *Comment:* Strategy CS.2 (Comprehensive Data Management) should be elevated to a high level of planned implementation as shown in the management plan's Appendix A1. If CINMS could serve as a clearinghouse for data, such as through the Sanctuary Integrated Monitoring Network (SIMoN), interested researchers would be able to assist the Sanctuary even in the absence of a comprehensive research and monitoring plan.

Response: NOAA has elevated the planned implementation level of activities within Strategy CS.2 to high. See revised Strategy CS.2 for updated information on how CINMS staff plans to use existing data management tools, like SIMoN.

245. *Comment:* Support expressed for the Collaborative Marine Research Program as a highly innovative effort to bring potential resources, knowledge and cost savings to bear on the process of biological marine research and monitoring. The Collaborative Marine Research Program is also: Uniquely capable of monitoring species not easily detected by traditional monitoring techniques; an excellent example of applying limited Sanctuary resources to known gaps and limitations that should be routinely assessed; an important outreach and research program.

Response: The Collaborative Marine Research Project is a valuable program. NOAA will continue to support this program as funding allows. For additional information about funding see the response to comment 238.

246. *Comment:* Support expressed for development of collaborative research programs coupled with socioeconomic monitoring programs, and as part of an integrated research plan, rather than developing in isolation.

Response: Collaborative marine research projects need to be integrated into the overall research and monitoring plan. As noted in the background of Strategy CS.4, efforts will be made to ensure that collaborative marine research does not duplicate existing research efforts, but rather complements them by filling research gaps and building new knowledge to assist resource managers. NOAA believes that the Sanctuary Advisory Council's Research Activities Panel (RAP) is a key player in providing Sanctuary management with advice to help ensure that research programs are integrated.

247. *Comment:* NOAA should donate R/V Shearwater vessel time to support the National Audubon Society's Christmas Bird Count.

Response: Written proposals must be submitted in order for NOAA to consider any vessel undertaking. NOAA will assign priority to those proposals that take place within Sanctuary boundaries and address various management plan priorities. See the response to comment 249 for additional information about the vessel allocation process.

248. *Comment:* The support of the R/V Shearwater to the local research community has been invaluable and CINMS should continue this support.

Response: The R/V Shearwater will continue to support those efforts that address various FMP action plan strategies, to the greatest extent allowable given financial and logistical constraints inherent to field operations.

249. *Comment:* Regarding the management plan's Operations Action Plan, the process by which CINMS research vessel time is allocated remains obscure, and research operations would benefit from an open and transparent set of rules by which allocation decisions are reached.

Response: NOAA has revised text in the FMP's Operations Action Plan, Strategy OP.4 to include clarification of the annual sea-day allocation and scheduling processes that occur each autumn.

250. *Comment:* NOAA should include a plan for deepwater site characterization and deepwater MPA monitoring in Strategy CS.3—Support Existing Site Characterization and Monitoring Programs.

Response: NOAA has updated text in Strategy CS. 3 of the FMP to include an activity on deep water monitoring for the CINMS MPA network.

251. *Comment:* SAMSAP surveys should be expanded (provided increased funding). There is an unmet

need to quantify fishing pressure in and around Sanctuary waters. Additionally, SAMSAP surveys would benefit from review by statisticians to optimize their design and usefulness.

Response: NOAA is actively working to increase SAMSAP funding at CINMS. Reduced availability of NOAA aircraft requires CINMS staff to seek alternative aircraft options, such as contract aircraft, which cost much more to fund than NOAA aircraft, and partner agency aircraft. CINMS has been working with socioeconomic statisticians and economists since 2007 to analyze and improve SAMSAP survey methodology and analysis.

252. *Comment:* NOAA should continue supporting seafloor mapping within the Sanctuary, which has uses for education and outreach, research and monitoring, and historical resources (finding shipwrecks).

Response: Comment noted.

253. *Comment:* Existing ongoing research activities in the CINMS are described in varying amounts of detail in the Conservation Science Action Plan; many are mentioned in passing or not mentioned at all.

Response: NOAA describes projects in varying amounts of detail and has elected not to describe every research project in great detail. There are some small, short-term projects (for example, graduate student work, or projects that may last three years or less), that while important, NOAA concluded did not warrant detailed descriptions in the plan. Programs that fall within Sanctuary priorities, but are not described, are not necessarily precluded from Sanctuary support. Likewise, the Sanctuary remains open to supporting new projects that may emerge.

254. *Comment:* The management plan's Conservation Science Action Plan information on marine reserves monitoring does not mention the large acoustic receiver array maintained by the Pfleger Institute of Environmental Research (PIER). PIER's monitoring of fish movement relative to the reserve boundaries is one of very few projects that are specifically designed to investigate questions of reserve efficacy.

Response: NOAA acknowledges important contributions the PIER project has brought to marine reserves research. Although this project ended in 2006, Sanctuary staff look forward to the analysis of existing data and are interested in seeing this project or similar acoustic tagging projects return, should funding allow. As mentioned in the Conservation Science Action Plan at CS.6, specific marine reserves biological monitoring programs are described in the Channel Islands Marine Protected Area Monitoring Plan, a multi-agency document developed by the California Department of Fish and Game (California Resources Agency, CDFG 2004).

255. *Comment:* The CINMS Conservation Science Action Plan should do more than simply track external programs. Importantly, as programs grow and research activity intensifies, a policy of generally supporting all existing programs will not suffice.

Response: The Conservation Science Action Plan is not limited to tracking external programs. The Sanctuary is directly involved in a number of research programs (e.g., SAMSAP, and seabird monitoring), explained in the Conservation Science Action Plan, and for which the Sanctuary provides support in the form of staff, vessel time, and/or funding. NOAA does not have a policy of ''supporting all existing programs'' at the CINMS. There are limits to the amount of support the Sanctuary can provide, and NOAA uses a strategic approach to planning Sanctuary research and monitoring, allocating resources in accordance with Sanctuary research priorities that are determined on an annual basis.

256. *Comment:* The Conservation Science Action Plan's performance evaluation criteria are not satisfactory, including the performance targets for the marine reserves monitoring strategy (CS.6). By specifying very narrow performance targets without an integrated research plan, CINMS staff effort is focused too quickly on small steps. NOAA should identify: (1) What the Sanctuary specifically wants to monitor, (2) what the targets for management are, and (3) whether those targets are being met.

Response: NOAA acknowledges that the Conservation Science Action Plan's performance evaluation criteria, while tangible and able to be quantifiably tracked, are not alone fully informative for overall management effectiveness. NOAA understands that a variety of assessment methods will be needed to ensure that the Conservation Science Action Plan is effective. Additional specific performance measures have been developed and are listed in the Description of the Issues section of the Performance Evaluation Action Plan within the FMP. These performance measures establish targets for understanding the status and trends of Sanctuary water quality, habitats and living marine resources, and will help guide prioritization and implementation of strategies and activities within the Conservation Science Action Plan. NOAA will work with the Research Activities Panel and other partners to refine assessment methods during management plan implementation, and will refine these methods over time.

257. *Comment:* CINMS staff should partner with ongoing research and coordination efforts via California Sea Grant, the *Southern California Coastal Ocean Observing System* (SCCOOS), and the California North Coast Ocean Observing System (CNCOOS).

Response: The NMSP's West Coast Region has been the lead on coordinating ocean observing systems within west coast national marine sanctuaries. With its support, CINMS staff continue to work with the Partnership for Interdisciplinary Studies of Coastal Oceans (PISCO) to help fund their oceanographic buoys.

258. *Comment:* NOAA should initiate an ecosystem based co-management seat on the research activities panel.

Response: As is the case with all Sanctuary Advisory Council working groups, the Research Activities Panel decides upon its membership, and does not at this time have seats dedicated to specific ideologies or user groups. NOAA recommends that the commenter make this general suggestion directly to the Research Activities Panel.

259. *Comment:* Success of the Comprehensive Data Management strategy will rely heavily on identifying a highly capable CINMS Research Coordinator.

Response: In 2007, NOAA hired Dr. Steve Katz as the Sanctuary's new Research Coordinator.

260. *Comment:* NOAA should initiate research on the impacts of increasing CO2 and ocean acidification on Sanctuary resources.

Response: CINMS staff and the Sanctuary Advisory Council have begun to examine increasing CO_2, ocean acidification, and related climate change issues. For example, CINMS staff and the Sanctuary Advisory Council are collaborating on a carbon budget and greening project that aims to raise awareness and understanding of the Sanctuary's carbon cycle and carbon inputs from human activity in the Sanctuary and surrounding environment. The NMSP is working with the NOAA Climate Office to pursue funding for detecting climate change impacts in each national marine sanctuary, including the Channel Islands. With regard to ocean acidification and its potential effects on Sanctuary resources, the Advisory Council's Conservation and Commercial Fishing working groups are collaborating on development of a comprehensive report on ocean acidification, and related

recommendations for the Sanctuary and NMSP. (See also new information added to the FMP's Resource Protection Action Plan). The results of this work are anticipated in 2008, and will include review and comments from the Advisory Council and its Research Activities Panel.

261. *Comment:* Commenter concurred with the comments offered by the Research Activities Panel.

Response: Please refer to responses to the Research Activities Panel's comments, listed in the table at the beginning of the FEIS response-to-comments appendix under ''Warner, Robert.''

Resource Protection

262. *Comment:* NOAA should develop a Resource Protection Action Plan within the management plan, to incorporate but go beyond the Emerging Issues Action Plan. A resource protection action plan should: link resource protection issues with management responses; require funding for staff time dedicated to issue-response measures; and articulate that CINMS may play a leadership role in, rather than relying excessively on other parties for, scientific and resource protection efforts. Resource protection issues could include: LNG, aquaculture, sea otter migration, artificial lighting (e.g. from squid boats), ship strikes, introduced and invasive species, artificial reefs, plumes of non-point source pollution from mainland rivers during storm events, and atmospheric deposition of air pollutants into Sanctuary waters.

Response: NOAA has revised several strategies and background information from the DMP to develop a new Resource Protection Action Plan in the FMP. This action plan articulates how NOAA addresses existing CINMS resource protection issues, as well as how emerging issues will be addressed. Each of the issues suggested as resource protection issues are noted in either the FMP's Resource Protection or Water Quality action plans. NOAA has explained the various steps it may take in responding to Sanctuary resource protection issues within Strategy RP.2 (''Responding to Identified Issues''). Due to the complexity and evolving nature of resource protection issues, NOAA maintains that it would be inappropriate to link specific ''triggers'' with specific ''responses'' in advance. The CINMS Resource Protection Coordinator and Sanctuary Advisory Council Coordinator are primarily responsible for implementing the activities in this action plan (with assistance from other staff). As permanent, full-time positions, each is allocated specific funding. NOAA also leverages and maximizes resources available through collaborative partnerships.

263. *Comment:* NOAA should take additional, or in some cases, immediate management measures to address critical resource management issues including: Underwater noise, aquaculture, artificial reefs, oil and gas development, wildlife protection, fisheries management, global warming and liquefied natural gas proposals. NOAA should establish a specific process to address these CINMS issues as part of the management plan review.

Response: The CINMS staff work closely with fishery management agencies (NMFS and the California Department of Fish and Game) to address Sanctuary concerns about fisheries impacts. The Sanctuary has expanded its discussion of wildlife protection, oil and gas development, and global warming in the FMP's Resource Protection Action Plan, which also discusses aquaculture and artificial reefs. This action plan describes a process for addressing resource protection issues. Threats from oil and gas development, and activities to address them, are discussed in the FMP's Emergency Response and Enforcement Action Plan, as well as the Water Quality Action Plan (which outlines a process for developing a comprehensive Water Quality Management Program to address all Sanctuary water quality issues).

264. *Comment:* NOAA should consider placing permanent moorings at popular island anchorages to prevent seafloor damage and protect resources from boaters who possess poor anchoring skills.

Response: NOAA has supported and permitted the installation and maintenance of permanent moorings at Santa Rosa, Santa Cruz and Anacapa islands anchorages, which are used by the NPS and its concessionaire vessels. The Sanctuary Advisory Council has discussed, and NOAA has considered the possible need for and appropriateness of additional moorings; however, at this time, NOAA has not reached a decision on this issue as it is still gathering information. NOAA will continue discussing this with the NPS, the Sanctuary Advisory Council and others. NOAA will use the activities in the Resource Protection Action Plan to track, assess, and determine how to address seafloor damage from anchoring.

Sanctuary Advisory Council Involvement

265. *Comment:* NOAA's federalism assessment statement within the proposed rule improperly and inaccurately suggested that the current Sanctuary Advisory Council supports the regulatory action.

Response: NOAA's intent was to provide information explaining that NOAA has consulted with various entities, including the Sanctuary Advisory Council, throughout the development of the regulatory action. The Sanctuary Advisory Council was very closely involved from 1999 through 2002, at which point the proposed regulatory action entered NOAA's internal review process. NOAA acknowledges that individuals who joined the Advisory Council since 2002 were not as closely involved in the development of the proposed regulatory action, and as such NOAA has revised the statement accordingly.

Sea Otters

266. *Comment:* The FMP and FEIS should discuss the connection between water quality, sea otter health, nearshore marine ecosystem health, and human health.

Response: Text in FEIS Appendix C now includes discussion about research on the connection between these concerns.

267. *Comment:* In the FEIS, NOAA should acknowledge and support the reality of future sea otter migration into Sanctuary habitats and not identify this as a potential ''issue,'' ''conflict,'' or ''problem'' to be dealt with. Also, it should be acknowledged in the FEIS that NOAA has taken a position on the expanding range of the sea otter by commenting in support of Alternative 3C in the U.S. Fish and Wildlife Service (2006) DSEIS.

Response: NOAA does consider future sea otter migration into Sanctuary habitats as an ''issue'' to be addressed. NOAA has not equated issues with problems, but rather issues constitute the range of topics that must be addressed by Sanctuary actions. Because sea otters have not been present in significant numbers within the Sanctuary since its designation, the expansion of their current range to include the Sanctuary is a change in Sanctuary conditions. NOAA believes that this change would warrant Sanctuary attention and may potentially warrant future actions by Sanctuary staff (e.g., in the Resource Protection, Research, and Education programs). NOAA has updated and augmented information on this issue in the FMP's

Resource Protection Action Plan, Description of the Issues, under the sub-header *Termination of the Sea Otter Translocation Program*. The NMSP has taken a position on the expansion of the sea otter range in southern California, and this is a matter of public record.

268. *Comment:* The documents should not use the phrase ''possible future sea otter migration into Sanctuary habitats,'' since sea otters are currently found within the Sanctuary, albeit not in large numbers (both at San Nicolas Island and in other parts of the Sanctuary) or necessarily as permanent residents. However, at some unknown time, sea otters will probably reoccupy this historic habitat as permanent residents again.

Response: NOAA has updated the management plan text in the FMP's Resource Protection Action Plan with information about the status of sea otters in the Sanctuary and surrounding region, using information from the USFWS 2005 Draft Supplemental Environmental Impact Statement on translocation of southern sea otters. San Nicolas Island is one of the Channel Islands, but is not part of the Sanctuary.

269. *Comment:* NOAA should consult with researchers at USGS (Brian Hatfield) and FWS (Lilian Carswell) to revise the mention of ''rare sightings'' of sea otters in the FEIS.

Response: NOAA has revised text in the FEIS based on the USFWS (2005) Draft Supplemental Environmental Impact Statement, which includes current information on the presence of sea otters in Sanctuary waters and the study area. Based on USFWS (2005) information on the abundance and distribution of California sea otters, sea otters are not expected to have any effect on CINMS resources within 10 years, and while there are rare sightings, they have yet to recolonize the CINMS.

Submerged Lands Disturbance

270. *Comment:* Commenters indicated their support for the proposed modification of the prohibition on altering submerged lands of the Sanctuary, which extends this protection of the seabed to the entire Sanctuary.

Response: Comment noted.

271. *Comment:* If bottom trawling occurs in a sanctuary, it should not be called a sanctuary.

Response: The purposes and policies of the NMSA provide for facilitating public and private use of national marine sanctuaries compatible with their primary goal of resource protection. Pursuant to existing federal and state regulations, bottom trawling is highly restricted in existing Sanctuary waters. It is prohibited inside one nmi of the islands, throughout the network of ten marine reserves and two conservation areas, and in several fisheries.

Take and Possession of Marine Mammals, Sea Turtles and Seabirds

272. *Comment:* Support expressed for prohibitions 9 and 10 (taking and possessing, respectively, any marine mammal, sea turtle, or seabird), but recommend that the regulation include or reference language specifically stating that commercial fishing or certain research activities which may involve the occasional take of these species may lawfully operate as such under authorizations granted pursuant to the Marine Mammal Protection Act, Endangered Species Act, or Migratory Bird Treaty Act.

Response: NOAA has not added the specifically requested language to these regulations. These prohibitions already include an exception for authorizations granted by the Marine Mammal Protection Act, Endangered Species Act, or Migratory Bird Treaty Act. As the DEIS (sections 2.1.10 and 2.1.11, 4.1.9 and 4.1.10) explained, the Sanctuary's proposed regulation would not apply if an activity (including a federally or state-approved fishery) that does or might cause take of marine mammals, sea turtles or seabirds has been authorized to do so under the MMPA, ESA, or MBTA or any implementing regulation promulgated under these acts. NOAA believes it has clearly described and helped the reader understand the nature, extent, applicability and intent of the exception to prohibitions 9 and 10.

273. *Comment:* Sanctuary prohibitions 9 and 10 (taking and possessing, respectively, any marine mammal, sea turtle, or seabird) are duplicative of existing regulations, unnecessary, confusing as to whether the intent is to track other laws, and could unnecessarily prohibit certain fisheries in the Sanctuary. NOAA should add language specifically acknowledging take exemptions found in other existing authorities, including PFMC Fishery Management Plans.

Response: NOAA has carefully crafted these regulations to be complementary in nature, with an area-specific focus on marine mammals, sea turtles, and seabirds in the Sanctuary, and to provide a different suite of penalties than available under other regulatory agencies' authority. The regulations as written acknowledge take and possession exemptions found in the Marine Mammal Protection Act (MMPA), Endangered Species Act (ESA), Migratory Bird Treaty Act (MBTA) or any regulation promulgated under the MMPA, ESA, or MBTA. NOAA understands that lawful fishing operations that are likely to take a marine mammal, sea turtle, or seabird are typically provided with exemptions for such take, and therefore would be excepted from this Sanctuary regulation. NOAA believes that the NMSA civil penalty schedule provides a valuable deterrent to illegal take and possession of these species. In addition, this regulation is consistent with those in place at the Monterey Bay, Stellwagen Bank, Olympic Coast, and Florida Keys national marine sanctuaries.

274. *Comment:* Concern expressed about the Sanctuary's prohibition on take of marine mammals, sea turtles, and seabirds, as it might apply to unintentional hooking of these animals while lawfully fishing. The regulation would impede a fisherman's ability to release, remove, unhook, or untangle any marine mammal that is inadvertently caught or snagged during lawful fishing operations in the CINMS. NOAA should revise the regulation to provide an exception for unintentional hooking. NOAA should also consider if USFWS and CDFG regulations have such an exception.

Response: NOAA understands that lawful fishing operations that are likely to take a marine mammal, sea turtle, or seabird are typically provided with exemptions for such take, and therefore are excepted from this regulation.

275. *Comment:* NOAA should improve NMSP enforcement of the Marine Mammal Protection Act with respect to emissions of underwater noise, especially now that NOAA is proposing to add a CINMS prohibition on marine mammal ''take'' within Sanctuary boundaries.

Response: The NMSP does not have enforcement authority with regard to the Marine Mammal Protection Act. Should NOAA conclude that unauthorized take has occurred within the Sanctuary, NOAA would ensure that appropriate enforcement actions are taken by NOAA's Office for Law Enforcement, the branch of NOAA charged with enforcing both the NMSA and MMPA.

276. *Comment:* Why is NOAA only now proposing a regulation to prohibit take of a turtle or marine mammal, when that is one of the basic protections that people expect?

Response: Take of these species has always been prohibited in the Sanctuary, and in U.S. waters in general, under the protections afforded by the Marine Mammal Protection Act, and the Endangered Species Act. At this time NOAA has determined that

overlaying these regulations with Sanctuary regulations is warranted to provide an added civil penalty deterrent against such already illegal take.

Vessel Traffic

277. *Comment:* NOAA should explain why CINMS Designation Document Article IV indicates that operating a vessel (i.e., watercraft of any description) within the Sanctuary is subject to regulation, including prohibition. At an Advisory Council meeting CINMS staff discussed regulation of MPWCs, but this language makes it possible for the Sanctuary to prohibit all vessels and NOAA should remove it.

Response: NOAA is not removing this language because since its inception, CINMS has had general authority to regulate the navigation of vessels. To date, NOAA has utilized this authority to regulate the operation of cargo vessels and vessels servicing offshore installations within one nmi of the Islands, and now, to regulate motorized personal watercraft within that same area. While a given activity may be within the Sanctuary's scope of regulations, any new Sanctuary action (including regulation) that could significantly affect the environment (including the human environment) would be subject to legal requirements under the National Environmental Policy Act, and Administrative Procedure Act, which ensure an open public review process regardless of the scope of regulations within the CINMS terms of designation.

278. *Comment:* NOAA should prohibit cruise ships and industrial activities such as LNG and associated traffic within the entire Sanctuary to protect the Sanctuary from noise impacts and discharges.

Response: At this time, NOAA's primary concerns with cruise ships pertain to nearshore approach and waste discharge/deposit in the Sanctuary. The new CINMS regulations prohibit cruise ships 300 GRT or more (cruise ships are typically much larger than 300 GRT, and industry trends show increasing vessel sizes) from approaching within one nmi of the Islands, and prohibit them from discharging sewage and graywater anywhere in the Sanctuary. Based upon the best available information, NOAA has determined that it is not necessary to ban cruise ships within the entire Sanctuary at this time.

The Sanctuary is already protected from industrial activities through regulations protecting the seabed and water quality, and a prohibition on hydrocarbon activities. The regulation changes add a prohibition on mineral activities. The International Maritime Organization designated the majority of the Sanctuary, excluding the portion that overlaps the Traffic Separation Scheme, as an Area To Be Avoided (ATBA). NOAA seldom observes large vessels within the ATBA, and as such has not deemed it necessary at this time to prohibit large vessel use beyond one nmi from the Islands. NOAA has been actively involved in commenting on proposed LNG projects adjacent to the Sanctuary. Regarding discharges from industrial traffic, Sanctuary regulations provide strong protections against pollution and discharges. Regarding noise impacts, see the response to comment 9.

279. *Comment:* DMP Strategy CS.2—Comprehensive Data Management must include data on commercial shipping dynamics via the Automated Identification System, and CINMS staff must consider taking a leadership role in bringing this system online.

Response: CINMS staff have taken a lead role in working with the Navy, U.S. Coast Guard, and The Marine Exchange of Southern California to install an AIS transceiver station on Santa Cruz Island or Anacapa Island and integrate the data with an AIS transceiver station on San Nicolas Island. Once completed, NOAA will work with partners to facilitate the distribution and management of incoming AIS data. For more information about CINMS AIS activities see FMP Strategy CS.8 (Automated Identification System (AIS) Vessel Tracking).

280. *Comment:* On SDEIS pages five and seven, 6,980 and 7,000 are both used to present the same information about ship transits, but one number should be used consistently.

Response: NOAA did not use two different numbers to present the same information about ship transits. One number presents a general statement about yearly ship transits through the Santa Barbara Channel being ''nearly 7,000,'' while the other number presents a statistic about Santa Barbara Channel ship transits in 2006 being ''an estimated 6,980.''

281. *Comment:* NOAA should incorporate the Santa Barbara Channel into the Sanctuary and reroute commercial ship traffic west of the Channel Islands.

Response: NOAA is not changing the CINMS boundary as part of this management plan review. However, NOAA will further analyze the boundary concepts in a separate environmental review process sometime in the future.

The shipping lanes were designated by the International Maritime Organization (IMO) and any modification of these lanes would be decided by this international body, not unilaterally by the United States or its executive branch agencies such as NOAA. Should the United States determine that the placement of the shipping lanes warrants reconsideration (for example, to reduce the risk of ship strikes on whales), the appropriate federal representatives would bring this information to the IMO.

Water Quality

Water Quality—Enhanced Protection

282. *Comment:* The final management plan and sanctuary regulations should make certain that the sanctuary is protected beyond minimum state and Federal pollution requirements.

Response: Both the existing and modified Sanctuary regulations go beyond state and other federal standards for the prohibition of waterborne pollution.

283. *Comment:* The EPA recommends the selection of NOAA's Alternative 1, which provides additional protections for water quality, including prohibiting the discharge of treated sewage from larger vessels and the at-sea transfer of petroleum-based products, materials or other matter ('lightering') within CINMS.

Response: Certain aspects of Alternative 1 are more protective to CINMS resources and qualities. However, at this time, in order to be consistent with the California Clean Coast Act, as well as with regulations proposed by the Monterey Bay, Cordell Bank, and Gulf of the Farallones national marine sanctuaries, NOAA is providing an exception for treated sewage discharges from oceangoing ships that do not have sufficient holding tank capacity to hold sewage while within the CINMS. See the FEIS for additional text and analysis on large vessel sewage discharge in the Sanctuary. With regard to the prohibition of lightering, NOAA maintains that such a prohibition is not warranted at this time (see the response to comment 176). Regarding Alternative 1, see the response to comment 132.

Water Quality—Funding

284. *Comment:* $20,000 per year, as indicated in the DMP, will not be commensurate with the workload associated with the Water Quality Protection Planning Strategy.

Response: The estimated costs for this strategy do not include staff time, which will be the principal cost of water quality program development. This strategy is focused on developing a plan

for water quality protection, rather that implementation of specific tasks. Furthermore, as explained in the strategy's background text, the NMSP's West Coast Regional Office is playing a significant role in helping to develop a CINMS water quality protection plan (and is not reflected in estimated site costs for implementing this strategy). CINMS will continue to work to leverage partner resources, including funds, as appropriate.

Water Quality—Incorporate SAC Recommendations

285. *Comment:* The management plan should be updated to indicate that the CINMS Advisory Council adopted the water quality needs assessment report in 2005, and that it is thus a product of the full Advisory Council rather than just the Conservation Working Group.

Response: NOAA has updated the FMP to note and describe the Sanctuary Advisory Council's adopted *Water Quality Needs Assessment for the Channel Islands National Marine Sanctuary.*

286. *Comment:* NOAA should incorporate the Advisory Council's water quality report recommendations into the management plan.

Response: NOAA has updated the FMP's Water Quality Action Plan, which now refers to the Sanctuary Advisory Council's 2005 report *A Water Quality Needs Assessment for the Channel Islands National Marine Sanctuary,* and the recommendations it contains. NOAA will work with the CINMS Advisory Council, its working groups, and other partners to implement the water quality strategy in the management plan, and to develop a detailed Sanctuary water quality protection plan that will describe knowledge and management gaps and how they may be addressed.

Water Quality—Other

287. *Comment:* Comments support: CINMS' continued efforts to address water quality concerns in the Sanctuary; the heightened attention to specific threats to Sanctuary water quality; the management plan placing a high value on monitoring and improving water quality; and the regulations providing needed enhancements to CINMS water quality protection. Support also expressed for evaluating and understanding localized and large-scale spatial and temporal impacts from oceanographic and climatic changes, and coastal and offshore impacts from human population increases.

Response: Comment noted.

288. *Comment:* The Central Coast Water Board implements programs that address many of the priority sub-issues identified in the DMP and welcomes the opportunity to work cooperatively and proactively with the Sanctuary on water quality issues.

Response: NOAA appreciates the Central Coast Water Board's support on Sanctuary water quality issues.

289. *Comment:* The DMP/DEIS should incorporate a broad-based approach and goals of the Ocean and Coastal Water Quality section of the five-year strategic plan of the California Ocean Protection Council (COPC).

Response: The CINMS Water Quality Action Plan provides the foundation for a broad based approach and outlines the process for developing a Sanctuary water quality protection plan. Sanctuary water quality goals will be developed as part of this process, and may include some of the goals identified in the OPC's five-year strategic plan.

290. *Comment:* Water quality conservation is one of the most critical issues facing Sanctuary managers in the coming five years and beyond. While the three activities and updated regulations proposed in Strategy WQ.2 are a good start toward meeting this objective, growing threats to Sanctuary water quality warrant a much more proactive and aggressive approach by CINMS.

Response: Once strategy WQ.2 is implemented and CINMS has a water quality protection plan, NOAA will consider the future actions it will need to take to best implement the activities identified in the plan to address threats to Sanctuary water quality.

291. *Comment:* CINMS should convene a conference of Santa Barbara Channel-area water quality experts to catalyze the action planning process and facilitate the identification of issues that drive water quality action planning.

Response: As described in the background to Strategy WQ.2 in the FMP, CINMS will consult with area water quality experts as part of the process to develop a water quality protection plan.

292. *Comment:* The Water Quality Protection Planning strategy should explicitly assign a greater level of responsibility and leadership on initiating short term water quality protection to the Sanctuary managers.

Response: The NMSP and its managers have a responsibility to address Sanctuary water quality. NMSP and CINMS leadership are also accountable to NMSP performance measures, one of which calls for sanctuaries to maintain or improve water quality based on long term monitoring data.

293. *Comment:* There are way too many people on this coastline, the ocean is affected, and I'm sure it's going to affect the Sanctuary.

Response: Implementing the management plan's Water Quality Action Plan will enable CINMS, by working in close coordination with other area water quality managers, to better identify and address water quality threats to the Sanctuary.

294. *Comment:* The DMP should include discharges from ship accidents, and natural oil and gas seeps as important possible sources affecting Sanctuary water quality.

Response: NOAA has revised the FMP's Water Quality Action Plan to incorporate natural oil and gas seeps and discharges from vessel accidents in the discussion of possible sources of pollution affecting Sanctuary water quality.

295. *Comment:* Two commenters indicated that they agreed with or supported the water quality comments submitted by the Sanctuary Advisory Council's Conservation Working Group.

Response: Please refer to responses to the Conservation Working Group's comments, listed in the table at the beginning of the FEIS response-to-comments appendix under ''Krop, Linda.''

Water Quality—Research and Monitoring

296. *Comment:* Commenter encourages continued CINMS support for Plumes and Blooms project and an assessment of its management implications, and continued CINMS support for the Southern California Bight Regional Monitoring surveys.

Response: Comment noted. NOAA plans to continue support for these programs as described in the FMP.

297. *Comment:* NOAA should process and analyze water quality samples from the Bight '03 survey and the Pac Baroness shipwreck exploration.

Response: ACINMS samples taken during the Bight '03 survey have been lab processed, and the results are publicly available on the Web site of the Southern California Coastal Water Research Project. In addition, lab tests on sediment samples taken from the wreck site of the Pac Baroness have been completed and some preliminary analysis work was done in 2007, yielding no striking results.

298. *Comment:* CINMS research effort should aim to determine the issues that will drive Sanctuary water quality action planning, and this should be included in the water quality monitoring strategy.

Response: CINMS staff will work with water quality experts and researchers, as appropriate, to identify and assess water quality issues during the process of developing a water quality protection program. These assessments will help set priorities for water quality research and monitoring efforts.

299. *Comment:* Water quality sampling of anchorage areas within the Sanctuary should be continued beyond the current pilot phase in order to provide a more comprehensive picture of potential water quality impacts associated with recreational boating around the Channel Islands. The sampling should be expanded to better assess high-use conditions by sampling more often during weekends and holidays. In addition, the monitoring protocol should be adapted based on results from the pilot phase. The management plan should reflect a commitment to this continued monitoring, and specify the subsequent research and management steps CINMS staff will take based on monitoring results.

Response: Monitoring of select anchorages and other sites within the Sanctuary took place in 2006, with Santa Barbara Channel Keeper performing the work under agreement with CINMS. In 2007, a report was produced by Santa Barbara Channel Keeper detailing the results of this monitoring effort. In the future, CINMS may continue and potentially expand this type of monitoring within the Sanctuary, as resources allow and upon further consideration of the efficacy of this approach. See activity 3 of Strategy WQ.1 for a description of CINMS water quality monitoring initiatives.

300. *Comment:* The management plan's Water Quality Action Plan Strategy WQ.1 should provide additional specificity to identify or at least propose specific measures CINMS staff can take to physically or institutionally support storm water plume researchers, such as with vessel time, lab space, human resources, etc. As written, the activity is too general with respect to existing information, SAC consensus, CINMS participation, and resource protection needs. The management plan should also articulate CINMS support for future Bight Surveys by first allocating specific funding to analyze existing samples (and organize that data for public availability), and then by planning funding and human resources for extensive sampling, processing and water quality data management in upcoming Bight Surveys.

Response: Strategy WQ.1 now notes the importance of better understanding stormwater plumes and how they may affect Sanctuary water quality and living resources. Additional details with regard to specific new monitoring measures to be taken have not yet been developed, but are expected to result from implementation of the broader strategy to develop a water quality protection plan (WQ.2). Regarding the Bight '03 survey data, all CINMS samples taken during that project have been lab processed, and the results are publicly available on the Web site of the Southern California Coastal Water Research Project. Furthermore, as the Water Quality Action Plan states, CINMS intends to continue support for future Bight Surveys.

301. *Comment:* NOAA should provide for systematic monitoring of anthropogenic marine debris.

Response: Marine debris is included in the description of water quality issues to be addressed through the Water Quality Action Plan, and NOAA may consider the suggestion of a systematic monitoring program for marine debris during the water quality protection planning process.

302. *Comment:* The Matilija Dam (Ventura County) is scheduled to be removed, potentially impacting CINMS resources through increased sedimentation. Monitoring should be implemented to understand the impact of this dam removal.

Response: The Matilija Dam is scheduled to be gradually removed starting in 2012. According to recent environmental assessments of dam removal, short term sediment stabilization will result in approximately 30% increase in coarse (sand and bigger) sediment at the associated beach over 50 years, which will be released gradually over 20–30 years, depending upon climate and hydrology. Fine sediments removed from the reservoir will be slurried downstream and placed within the 100 year floodplain. There is an estimate of potential increase in fine sediment plume from the river, but quantitatively this will be insignificant since the dam currently passes 100% of the fine sediment. At this time, NOAA will rely on the relevant federal and state authorities to monitor and report on increased sedimentation from dam removal, while also continuing to support related water quality, sediment and plume studies (see the response to comment 300).

Water Quality—Specify Plans in More Detail

303. *Comment:* The management plan needs more specificity regarding corrective actions for managing water quality impacts in the Sanctuary. The Water Quality Action Plan is relying almost entirely on a long-term bureaucratic process subject to Congressional funding, and the success or failure of Staff recruitment at the NMSP's regional level. This is particularly troubling given the array of documented water quality threats facing Channel Islands today, and the suite of relatively low-cost, actionable water quality conservation recommendations delivered from the Advisory Council to the Sanctuary Superintendent in 2005.

Response: The Water Quality Action Plan describes a future process that will build on the best available information, engage stakeholders and experts, identify and prioritize gaps in Sanctuary water quality protection, and propose management actions to address threats. NOAA understands that there are known issues and many specific recommendations that have been put forth by various individuals and the Sanctuary Advisory Council, and intends to build on those ideas. CINMS staff have added recent information to the Water Quality Action Plan, drawing on documents such as the water quality needs assessment endorsed by the Sanctuary Advisory Council. At this time, however, full details of what the water quality protection program would entail have not yet been decided upon, and will be determined through the process described in the Water Quality Action Plan.

Water Quality—Staffing

304. *Comment:* NOAA should expeditiously hire a new West Coast Region Water Quality Coordinator.

Response: The hiring of a regional water quality coordinator or other positions related to CINMS water quality protection planning will be considered as appropriate, and as resources allow. NOAA recognizes that resource limitations as well as the necessary program and partner developments may limit implementation of all of the activities in the various action plans. NOAA will continue to work with the Department of Commerce, Office of Management and Budget, and Congress in developing supporting justifications when preparing budget submissions.

305. *Comment:* NOAA should consider creating a water quality specialist position at CINMS.

Response: As CINMS water quality protection program continues to evolve, NOAA will consider a new staff position. Any new position would, however, be contingent upon the availability of resources and the staffing

needs required for addressing identified issues and actions.

Water Quality—Watershed Approach

306. *Comment:* Given that land-based activities can have a dramatic effect on water quality, the Sanctuary should take a watershed approach in coordination with other agencies and groups involved in water quality management.

Response: A watershed approach and coordination with other agencies is important when addressing CINMS water quality issues. NOAA will work in close collaboration with area water quality partners in the development of the CINMS water quality protection plan, and will consider the task force suggestion.

Water Quality—Working Group

307. *Comment:* The management plan should establish a Water Quality Working Group within the SAC. Any Water Quality Protection Program the working group develops should be similar to that at the Monterey Bay National Marine Sanctuary.

Response: CINMS staff and Advisory Council members have been discussing the potential formation of a Water Quality Working Group for several years. As CINMS implements Strategy WQ.2, staff will revisit this idea with the Advisory Council. Process approaches, such as the possible formation of a Working Group, will be defined at that point. Stakeholder and expert participation is a hallmark of the Sanctuary's management approach, and will be part of the overall process to develop a water quality protection program. As Strategy WQ.2 notes, CINMS will use, to the extent appropriate, the existing Monterey Bay National Marine Sanctuary Water Quality Protection Program as a model.

V. Changes From the Proposed Rule

NOAA published a proposed rule for this action on May 19, 2006 (71 FR 29096). This final rule incorporates changes to the 2006 proposed rule based on comments received during the 2006 public comment period, comments received during the 2008 public comment period (regarding large vessel sewage and graywater discharge), and NOAA's subsequent analysis.

Between May and July of 2006, NOAA received public comment and held two hearings on the proposed rule and associated DEIS. Between March and May 2008, NOAA received public comment on a supplemental proposed rule for discharges/deposits from within or into the Sanctuary and associated supplemental DEIS (SDEIS). NOAA received over 700 comments on the DEIS, SDEIS, and proposed rules.

Regulation changes between the proposed and final rules include the following:

- Discharge and deposit regulation: Modified graywater exception applies to vessels less than 300 gross registered tons (GRT), and oceangoing ships 300 GRT or more without sufficient holding tank capacity to hold graywater while within the CINMS.
- Discharge and deposit regulation: Modified treated sewage exception applies to vessels less than 300 GRT, as well as to oceangoing ships without sufficient holding tank capacity to hold treated sewage while within the Sanctuary.
- Added definitions for ''cruise ship,'' ''oceangoing ship,'' and ''graywater''.
- Discharge and deposit regulation: Modified the exception for fish, fish parts and chumming materials to clarify that it applies to the lawful practice of discarding fish scraps used in or resulting from lawful fishing.
- Removed the proposed outer boundary coordinate corrections, and removed the proposed corrections to the legal description of the Sanctuary area based on recalculations of the Sanctuary's size.

As NOAA explained in the March 2008 proposed rule and SDEIS, after receiving comments on the 2006 proposed rule and DEIS, NOAA modified the Sanctuary's proposed discharge regulation to better address potential impacts of sewage and graywater discharges from large vessels. In addition, based on comments received on the 2008 proposed rule and SDEIS, NOAA further modified the discharge regulation as it pertains to treated sewage discharges from large vessels. The final rule's discharge regulation provides that the exception for treated sewage is applicable to small vessels (less than 300 GRT), as well as to oceangoing ships (defined in the regulations as private, commercial, government, or military vessels of 300 gross registered tons or more, not including cruise ships) without sufficient holding tank capacity to hold sewage while within the Sanctuary. The final rule's discharge regulation as it pertains to graywater provides that the exception for graywater is only applicable to small vessels (less than 300 GRT), and to oceangoing ships without sufficient holding tank capacity to hold graywater while within the Sanctuary.

In 2007, NOAA made technical corrections to the CINMS boundary coordinates, re-calculated the original CINMS area as approximately 1,113 square nautical miles (72 FR 29208), and increased the Sanctuary area by approximately 15 square nautical miles to allow the boundary of four marine reserves to be defined by straight lines projecting outside the original CINMS boundary, allowing for better enforcement of the marine reserves. This change did not constitute a significant change in the geographic area of the Sanctuary (other than the approximately 15 square nautical miles referred to above) but rather an improvement in the estimate of its size. NOAA originally intended to make technical corrections to the Sanctuary boundary coordinates and re-calculate the CINMS area (provided at 15 CFR 922.70) as part of this rule. However, since NOAA made the technical corrections to Sanctuary boundary coordinates and re-calculated the CINMS area in 2007 as part of the FEIS and final rule to establish marine reserves and conservation areas within the Sanctuary, these aspects of clarifying the Sanctuary boundary description are reflected in, but not established by this final rule.

VI. Miscellaneous Rulemaking Requirements

National Marine Sanctuaries Act

Section 304(a)(4) of the NMSA (16 U.S.C. 1434(a)(4)) requires that the procedures specified in section 304 for designating a National Marine Sanctuary be followed in modifying any term of designation. Because this action revises the terms of designation, NOAA must comply with the requirements of section 304(a)(5). All requirements have been completed.

National Environmental Policy Act

When changing a term of designation of a National Marine Sanctuary, section 304 of the NMSA (16 U.S.C. 1434(a)(2)(A)) requires the preparation of an environmental impact statement (EIS), as defined by the National Environmental Policy Act of 1969 (42 U.S.C. 4321 *et seq.*), and that the draft EIS be made available to the public. NOAA prepared a draft EIS (DEIS) and supplemental DEIS (SDEIS) on the proposal, and copies are available at the address and Web site listed in the Address section of this final rule. Responses to comments received on the DEIS, SDEIS and proposed rule were published in the final EIS and are also provided in this final rule.

Coastal Zone Management Act

The California Coastal Commission has concurred that this action is consistent to the maximum extent

practicable with the California Coastal Management Program.

Executive Order 12866: Regulatory Impact

This final rule has been determined to be not significant within the meaning of Executive Order 12866.

Executive Order 13132: Federalism Assessment

NOAA has concluded that this regulatory action does not have federalism implications, as that term is defined in Executive Order 13132, to warrant preparation of a federalism assessment. Through the course of the development of the management plan and regulatory changes NOAA consulted with members of the Sanctuary Advisory Council, the California Resources Agency, California Department of Fish and Game, and the California Coastal Commission, California Department of Boating and Waterways, California Department of Fish and Game, California State Lands Commission, and California Resources Agency. Also, in 2003, NOAA consulted in writing with the above mentioned state agencies in addition to: The Office of the Governor of California, the California Department of Parks and Recreation, the California Department of Water Resources, the California Department of Conservation, the California Environmental Protection Agency, the California State Water Resources Control Board, and the California Assembly Committee on Natural Resources.

Regulatory Flexibility Act

The Chief Counsel for Regulation of the Department of Commerce certified to the Chief Counsel for Advocacy of the Small Business Administration that the proposed rule, if adopted, would not have a significant economic impact on a substantial number of small entities. The factual basis for this certification appears in the proposed rule and is not repeated here. There were no comments received on the certification, and comments related to the economic impacts of this rule do not change the basis of the certification. As a result, a final regulatory flexibility analysis was not required and none was prepared.

Paperwork Reduction Act

This rule does not contain any new information collection requirements or revisions to the existing information collection requirement that was approved by OMB (OMB Control Number 0648–0141) under the Paperwork Reduction Act of 1980, 44 U.S.C. 3501 *et seq.*

Notwithstanding any other provision of law, no person is required to respond to, nor shall any person be subject to a penalty for failure to comply with a collection of information subject to the requirements of the Paperwork Reduction Act, unless that collection of information displays a currently valid OMB control number.

References

A complete list of all references cited herein is available upon request (see **ADDRESSES** section).

Dated: January 9, 2009.

Christopher Cartwright,

Associate Assistant Administrator for Management and CFO/CAO, Ocean Services and Coastal Zone Management.

List of Subjects in 15 CFR Part 922

Administrative practice and procedure, Coastal zone, Historic preservation, Intergovernmental relations, Marine resources, Natural resources, Penalties, Recreation and recreation areas, Reporting and recordkeeping requirements, Wildlife.

■ Accordingly, for the reasons set forth above, 15 CFR part 922 is amended as follows:

PART 922—NATIONAL MARINE SANCTUARY PROGRAM REGULATIONS

■ 1. The authority citation for part 922 continues to read as follows:

Authority: 16 U.S.C. 1431 *et seq.*

■ 2. Sections 922.70 through 992.74 are revised to read as follows:

Sec.

922.70 Boundary.
922.71 Definitions.
922.72 Prohibited or otherwise regulated activities—Sanctuary-wide.
922.73 Additional prohibited or otherwise regulated activities—marine reserves and marine conservation area.
922.74 Permit procedures and issuance criteria.

§ 922.70 Boundary.

The Channel Islands National Marine Sanctuary (Sanctuary) consists of an area of approximately 1,110 square nautical miles (nmi) of coastal and ocean waters, and the submerged lands thereunder, off the southern coast of California. The Sanctuary boundary begins at the Mean High Water Line of and extends seaward to a distance of approximately six nmi from the following islands and offshore rocks: San Miguel Island, Santa Cruz Island, Santa Rosa Island, Anacapa Island, Santa Barbara Island, Richardson Rock, and Castle Rock (the Islands). The seaward boundary coordinates are listed in Appendix A to this subpart.

§ 922.71 Definitions.

In addition to those definitions found at 15 CFR 922.3, the following definitions apply to this subpart:

Cruise ship means a vessel with 250 or more passenger berths for hire.

Graywater means galley, bath, or shower water.

Introduced species means any species (including but not limited to any of its biological matter capable of propagation) that is non-native to the ecosystems of the Sanctuary; or any organism into which altered genetic matter, or genetic matter from another species, has been transferred in order that the host organism acquires the genetic traits of the transferred genes.

Motorized personal watercraft means a vessel, usually less than 16 feet in length, which uses an inboard, internal combustion engine powering a water jet pump as its primary source of propulsion. The vessel is intended to be operated by a person or persons sitting, standing or kneeling on the vessel, rather than within the confines of the hull. The length is measured from end to end over the deck excluding sheer, meaning a straight line measurement of the overall length from the foremost part of the vessel to the aftermost part of the vessel, measured parallel to the centerline. Bow sprits, bumpkins, rudders, outboard motor brackets, and similar fittings or attachments, are not included in the measurement. Length is stated in feet and inches.

Oceangoing ship means a private, commercial, government, or military vessel of 300 gross registered tons or more, not including cruise ships.

Pelagic finfish are defined as: Northern anchovy (*Engraulis mordax*), barracudas (*Sphyraena spp.*), billfishes (family *Istiophoridae*), dolphinfish (*Coryphaena hippurus*), Pacific herring (*Clupea pallasi*), jack mackerel (*Trachurus symmetricus*), Pacific mackerel (*Scomber japonicus*), salmon (*Oncorhynchus spp.*), Pacific sardine (*Sardinops sagax*), blue shark (*Prionace glauca*), salmon shark (*Lamna ditropis*), shortfin mako shark (*Isurus oxyrinchus*), thresher sharks (*Alopias spp.*), swordfish (*Xiphias gladius*), tunas (family *Scombridae*), and yellowtail (*Seriola lalandi*).

Stowed and not available for immediate use means not readily accessible for immediate use, e.g., by being securely covered and lashed to a deck or bulkhead, tied down, unbaited, unloaded, or partially disassembled (such as spear shafts being kept separate from spear guns).

§ 922.72 Prohibited or otherwise regulated activities—Sanctuary-wide.

(a) Except as specified in paragraphs (b) through (e) of this section, the following activities are prohibited and thus unlawful for any person to conduct or cause to be conducted:

(1) Exploring for, developing, or producing hydrocarbons within the Sanctuary, except pursuant to leases executed prior to March 30, 1981, and except the laying of pipeline pursuant to exploring for, developing, or producing hydrocarbons.

(2) Exploring for, developing, or producing minerals within the Sanctuary, except producing by-products incidental to hydrocarbon production allowed by paragraph (a)(1) of this section.

(3)(i) Discharging or depositing from within or into the Sanctuary any material or other matter except:

(A) Fish, fish parts, or chumming materials (bait) used in or resulting from lawful fishing activity within the Sanctuary, provided that such discharge or deposit is during the conduct of lawful fishing activity within the Sanctuary;

(B) For a vessel less than 300 gross registered tons (GRT), or an oceangoing ship without sufficient holding tank capacity to hold sewage while within the Sanctuary, biodegradable effluent generated incidental to vessel use by an operable Type I or II marine sanitation device (U.S. Coast Guard classification) approved in accordance with section 312 of the Federal Water Pollution Control Act, as amended, (FWPCA), 33 U.S.C. 1321 *et seq*. Vessel operators must lock all marine sanitation devices in a manner that prevents discharge or deposit of untreated sewage;

(C) Biodegradable matter from:

(*1*) Vessel deck wash down;

(*2*) Vessel engine cooling water;

(*3*) Graywater from a vessel less than 300 gross registered tons;

(*4*) Graywater from an oceangoing ship without sufficient holding tank capacity to hold graywater while within the Sanctuary;

(D) Vessel engine or generator exhaust;

(E) Effluent routinely and necessarily discharged or deposited incidental to hydrocarbon exploration, development, or production allowed by paragraph (a)(1) of this section; or

(F) Discharge allowed under section 312(n) of the FWPCA.

(ii) Discharging or depositing from beyond the boundary of the Sanctuary any material or other matter that subsequently enters the Sanctuary and injures a Sanctuary resource or quality, except those listed in paragraphs (a)(3)(i)(B) through (F) of this section and fish, fish parts, or chumming materials (bait) used in or resulting from lawful fishing activity beyond the boundary of the Sanctuary, provided that such discharge or deposit is during the conduct of lawful fishing activity there.

(4) Drilling into, dredging, or otherwise altering the submerged lands of the Sanctuary; or constructing or placing any structure, material, or other matter on or in the submerged lands of the Sanctuary, except as incidental to and necessary to:

(i) Anchor a vessel;

(ii) Install an authorized navigational aid;

(iii) Conduct lawful fishing activity;

(iv) Lay pipeline pursuant to exploring for, developing, or producing hydrocarbons; or

(v) Explore for, develop, or produce hydrocarbons as allowed by paragraph (a)(1) of this section.

(5) Abandoning any structure, material, or other matter on or in the submerged lands of the Sanctuary.

(6) Except to transport persons or supplies to or from any Island, operating within one nmi of any Island any vessel engaged in the trade of carrying cargo, including, but not limited to, tankers and other bulk carriers and barges, any vessel engaged in the trade of servicing offshore installations, or any vessel of three hundred gross registered tons or more, except fishing or kelp harvesting vessels.

(7) Disturbing a seabird or marine mammal by flying a motorized aircraft at less than 1,000 feet over the waters within one nmi of any Island, except (if allowed under paragraph (a)(9) of this section):

(i) To engage in kelp bed surveys; or

(ii) to transport persons or supplies to or from an Island.

(8) Moving, removing, injuring, or possessing, or attempting to move, remove, injure, or possess a Sanctuary historical resource.

(9) Taking any marine mammal, sea turtle, or seabird within or above the Sanctuary, except as authorized by the Marine Mammal Protection Act, as amended, (MMPA), 16 U.S.C. 1361 *et seq*., Endangered Species Act, as amended, (ESA), 16 U.S.C. 1531 *et seq*., Migratory Bird Treaty Act, as amended, (MBTA), 16 U.S.C. 703 *et seq*., or any regulation, as amended, promulgated under the MMPA, ESA, or MBTA.

(10) Possessing within the Sanctuary (regardless of where taken from, moved, or removed from) any marine mammal, sea turtle, or seabird, except as authorized by the MMPA, ESA, MBTA, or any regulation, as amended, promulgated under the MMPA, ESA, or MBTA.

(11) Marking, defacing, damaging, moving, removing, or tampering with any sign, notice, or placard, whether temporary or permanent, or any monument, stake, post, or other boundary marker related to the Sanctuary.

(12) Introducing or otherwise releasing from within or into the Sanctuary an introduced species, except striped bass (*Morone saxatilis*) released during catch and release fishing activity.

(13) Operating a motorized personal watercraft within waters of the Sanctuary that are coextensive with the Channel Islands National Park, established by 16 U.S.C. 410(ff).

(b)(1) The prohibitions in paragraphs (a)(3) through (13) of this section and in § 922.73 do not apply to military activities carried out by DOD as of the effective date of these regulations and specifically identified in section 3.5.9 (Department of Defense Activities) of the Final Channel Islands National Marine Sanctuary Management Plan/ Final Environmental Impact Statement (FMP/FEIS), Volume II: Environmental Impact Statement, 2008, authored and published by NOAA (''pre-existing activities''). Copies of the document are available from the Channel Islands National Marine Sanctuary, 113 Harbor Way, Santa Barbara, CA 93109. Other military activities carried out by DOD may be exempted by the Director after consultation between the Director and DOD.

(2) A military activity carried out by DOD as of the effective date of these regulations and specifically identified in the section entitled ''Department of Defense Activities'' of the FMP/FEIS is not considered a pre-existing activity if:

(i) It is modified in such a way that requires the preparation of an environmental assessment or environmental impact statement under the National Environmental Policy Act, 42 U.S.C. 4321 *et seq*., relevant to a Sanctuary resource or quality;

(ii) It is modified, including but not limited to changes in location or frequency, in such a way that its possible adverse effects on Sanctuary resources or qualities are significantly greater than previously considered for the unmodified activity;

(iii) It is modified, including but not limited to changes in location or frequency, in such a way that its possible adverse effects on Sanctuary resources or qualities are significantly different in manner than previously considered for the unmodified activity; or

(iv) There are new circumstances or information relevant to a Sanctuary resource or quality that were not addressed in the FMP/FEIS.

(3) In the event of destruction of, loss of, or injury to a Sanctuary resource or quality resulting from an incident, including, but not limited to, discharges, deposits, and groundings, caused by a DOD activity, DOD, in coordination with the Director, must promptly prevent and mitigate further damage and must restore or replace the Sanctuary resource or quality in a manner approved by the Director.

(4) All DOD activities must be carried out in a manner that avoids to the maximum extent practicable any adverse impacts on Sanctuary resources and qualities.

(c) The prohibitions in paragraphs (a)(3) through (10), (a)(12), and (a)(13) of this section and in § 922.73 do not apply to any activity conducted under and in accordance with the scope, purpose, terms, and conditions of a National Marine Sanctuary permit issued pursuant to 15 CFR 922.48 and 922.74.

(d) The prohibitions in paragraphs (a)(3) through (11) and (a)(13) of this section and in § 922.73 do not apply to any activity necessary to respond to an emergency threatening life, property, or the environment.

(e) The prohibitions in paragraphs (a)(3) through (11) and (a)(13) of this section and in § 922.73 do not apply to any activity necessary for valid law enforcement purposes in the Sanctuary.

§ 922.73 Additional prohibited or otherwise regulated activities—marine reserves and marine conservation area.

(a) Marine reserves. Unless prohibited by 50 CFR part 660 (Fisheries off West Coast States), the following activities are prohibited and thus unlawful for any person to conduct or cause to be conducted within a marine reserve described in Appendix B to this subpart, except as specified in paragraphs (b) through (e) of § 922.72:

(1) Harvesting, removing, taking, injuring, destroying, collecting, moving, or causing the loss of any Sanctuary resource, or attempting any of these activities.

(2) Possessing fishing gear on board a vessel unless such gear is stowed and not available for immediate use.

(3) Possessing any Sanctuary resource, except legally harvested fish on board a vessel at anchor or in transit.

(b) Marine conservation area. Unless prohibited by 50 CFR part 660 (Fisheries off West Coast States), the following activities are prohibited and thus unlawful for any person to conduct or cause to be conducted within the marine conservation area described in Appendix C to this subpart, except as specified in paragraphs (b) through (e) of § 922.72:

(1) Harvesting, removing, taking, injuring, destroying, collecting, moving, or causing the loss of any Sanctuary resource, or attempting any of these activities, except:

(i) Recreational fishing for pelagic finfish; or

(ii) Commercial and recreational fishing for lobster.

(2) Possessing fishing gear on board a vessel, except legal fishing gear used to fish for lobster or pelagic finfish, unless such gear is stowed and not available for immediate use.

(3) Possessing any Sanctuary resource, except legally harvested fish.

§ 922.74 Permit procedures and issuance criteria.

(a) A person may conduct an activity prohibited by § 922.72(a)(3) through (10), (a)(12), and (a)(13), and § 922.73, if such activity is specifically authorized by, and conducted in accordance with the scope, purpose, terms, and conditions of, a permit issued under § 922.48 and this section.

(b) The Director, at his or her sole discretion, may issue a permit, subject to terms and conditions as he or she deems appropriate, to conduct an activity prohibited by § 922.72(a)(3) through (10), (a)(12), and (a)(13), and § 922.73, if the Director finds that the activity:

(1) Is appropriate research designed to further understanding of Sanctuary resources and qualities;

(2) Will further the educational value of the Sanctuary;

(3) Will further salvage or recovery operations in or near the Sanctuary in connection with a recent air or marine casualty;

(4) Will assist in managing the Sanctuary; or

(5) Will further salvage or recovery operations in connection with an abandoned shipwreck in the Sanctuary title to which is held by the State of California.

(c) The Director may not issue a permit under § 922.48 and this section unless the Director also finds that:

(1) The proposed activity will have at most short-term and negligible adverse effects on Sanctuary resources and qualities;

(2) The applicant is professionally qualified to conduct and complete the proposed activity;

(3) The applicant has adequate financial resources available to conduct and complete the proposed activity;

(4) The duration of the proposed activity is no longer than necessary to achieve its stated purpose;

(5) The methods and procedures proposed by the applicant are appropriate to achieve the goals of the proposed activity, especially in relation to the potential effects of the proposed activity on Sanctuary resources and qualities;

(6) The proposed activity will be conducted in a manner compatible with the primary objective of protection of Sanctuary resources and qualities, considering the extent to which the conduct of the activity may diminish or enhance Sanctuary resources and qualities, any potential indirect, secondary, or cumulative effects of the activity, and the duration of such effects;

(7) The proposed activity will be conducted in a manner compatible with the value of the Sanctuary as a source of recreation and as a source of educational and scientific information, considering the extent to which the conduct of the activity may result in conflicts between different users of the Sanctuary and the duration of such effects;

(8) It is necessary to conduct the proposed activity within the Sanctuary;

(9) The reasonably expected end value of the proposed activity furthers Sanctuary goals and purposes and outweighs any potential adverse effects on Sanctuary resources and qualities from the conduct of the activity; and

(10) Any other matters the Director deems appropriate do not make the issuance of a permit for the proposed activity inappropriate.

(d) Applications. (1) Applications for permits should be addressed to the Director, Office of National Marine Sanctuaries; ATTN: Manager, Channel Islands National Marine Sanctuary, 113 Harbor Way, Santa Barbara, CA 93109.

(2) In addition to the information listed in § 922.48(b), all applications must include information the Director needs to make the findings in paragraphs (b) and (c) of this section.

(e) In addition to any other terms and conditions that the Director deems appropriate, a permit issued pursuant to this section must require that the permittee agree to hold the United States harmless against any claims arising out of the conduct of the permitted activities.

[FR Doc. E9–652 Filed 1–15–09; 8:45 am]

BILLING CODE 3510–NK–P

Federal Register

Friday,
January 16, 2009

Part V

Department of Health and Human Services

Centers for Medicare & Medicaid Services

42 CFR Part 493

Medicare, Medicaid, and Clinical Laboratory Improvement Amendments of 1988 (CLIA) Program; Cytology Proficiency Testing (PT); Proposed Rule

DEPARTMENT OF HEALTH AND HUMAN SERVICES

Centers for Medicare & Medicaid Services

42 CFR Part 493

[CMS–2252–P]

RIN 0938–A034

Medicare, Medicaid, and Clinical Laboratory Improvement Amendments of 1988 (CLIA) Program; Cytology Proficiency Testing (PT)

AGENCIES: Centers for Medicare & Medicaid Services (CMS), HHS.

ACTION: Proposed rule.

SUMMARY: This proposed rule would amend the Clinical Laboratory Improvement Amendments of 1988 (CLIA) regulations for cytology proficiency testing (PT), to reflect changes in cytology laboratory operations and practices. The proposed changes are based on recommendations received from the Clinical Laboratory Improvement Advisory Committee (CLIAC), input from the professional community, and government experience with the implementation of cytology PT. The proposed changes would amend certain definitions, lengthen the testing interval, require validation of cytology challenges before use in testing, increase the minimum number of cytology challenges per testing event, change the grading scheme, and allow flexibility to accommodate new technologies (for example, digital images, as they are implemented in cytology laboratory practice).

DATES: To be assured consideration, comments must be received at one of the addresses provided below, no later than 5 p.m. on March 17, 2009.

ADDRESSES: In commenting, please refer to file code CMS–2252–P. Because of staff and resource limitations, we cannot accept comments by facsimile (FAX) transmission.

You may submit comments in one of four ways (please choose only one of the ways listed):

1. *Electronically.* You may submit electronic comments on this regulation to *http://www.regulations.gov*. Follow the instructions under the ''More Search Options'' tab.

2. *By regular mail.* You may mail written comments to the following address only: Centers for Medicare & Medicaid Services, Department of Health and Human Services, *Attention:* CMS–2252–P, P.O. Box 8016, Baltimore, MD 21244–1850.

Please allow sufficient time for mailed comments to be received before the close of the comment period.

3. *By express or overnight mail.* You may send written comments to the following address only: Centers for Medicare & Medicaid Services, Department of Health and Human Services, *Attention:* CMS–2252–P, Mail Stop C4–26–05, 7500 Security Boulevard, Baltimore, MD 21244–1850.

4. *By hand or courier.* If you prefer, you may deliver (by hand or courier) your written comments (one original) before the close of the comment period to either of the following addresses:

a. Room 445–G, Hubert H. Humphrey Building, 200 Independence Avenue, SW., Washington, DC 20201.

(Because access to the interior of the Hubert H. Humphrey (HHH) Building is not readily available to persons without Federal Government identification, commenters are encouraged to leave their comments in the CMS drop slots located in the main lobby of the building. A stamp-in clock is available for persons wishing to retain a proof of filing by stamping in and retaining an extra copy of the comments being filed.)

b. 7500 Security Boulevard, Baltimore, MD 21244–1850.

If you intend to deliver your comments to the Baltimore address, please call telephone number (410) 786–9994 in advance to schedule your arrival with one of our staff members.

Comments mailed to the addresses indicated as appropriate for hand or courier delivery may be delayed and received after the comment period.

Submission of comments on paperwork requirements. You may submit comments on this document's paperwork requirements by following the instructions at the end of the ''Collection of Information Requirements'' section in this document.

For information on viewing public comments, see the beginning of the **SUPPLEMENTARY INFORMATION** section.

FOR FURTHER INFORMATION CONTACT: Nancy Anderson, CDC, (404) 498–2280. Judy Yost, CMS, (410) 786–3531.

SUPPLEMENTARY INFORMATION: *Inspection of Public Comments:* All comments received before the close of the comment period are available for viewing by the public, including any personally identifiable or confidential business information that is included in a comment. We post all comments received before the close of the comment period on the following Web site as soon as possible after they have been received: *http://www.regulations.gov*. Follow the search instructions on that Web site to view public comments.

Comments received timely will also be available for public inspection as they are received, generally beginning approximately 3 weeks after publication of a document, at the headquarters of the Centers for Medicare & Medicaid Services, 7500 Security Boulevard, Baltimore, Maryland 21244, Monday through Friday of each week from 8:30 a.m. to 4 p.m. To schedule an appointment to view public comments, phone 1–800–743–3951.

I. Background

A. Origin for Cytology PT

In 1987, articles in The Wall Street Journal questioned the competence of laboratories that examined Papanicolaou (Pap) smears and attributed misdiagnosed cases of cancer to ''excessive workloads of cytotechnologists, lack of quality control procedures, and poorly educated personnel.'' Walt Bogdanovich, Lax Laboratories: the Pap Test Misses Much Cervical Cancer Through Labs' Errors, The Wall Street Journal, November 2, 1987, at A:1, Column 6. Walt Bogdanovich, Physicians' Carelessness with Pap Tests is cited *in Procedure's High Failure Rate,* The Wall Street Journal. December 29, 1987, at A:17, Column 4.

Following the public outcry, Congress held hearings in both the House of Representatives and the Senate in the spring of 1988. The House of Representatives Committee on Energy and Commerce's report on the Clinical Laboratory Improvement Amendments of 1988 (CLIA), Public Law 100–578, stated ''The Committee does not intend for the Secretary to exempt analytes from proficiency testing merely because such testing is not currently available or because it is difficult to obtain consensus of the best method of proficiency testing,'' as is the case with cytology PT. *See,* H.R. Rep. No. 100–899, at p. 31 (1988), *reprinted in* 1988 U.S.C.C.A.N. 3828, 3850. The Secretary was specifically instructed to ''develop, or foster the development of, a proficiency test for cytology slides and to conduct, or require approved proficiency testing agencies to conduct, some onsite proficiency testing''. Id. at 3852. The corresponding Senate report stated that a ''* * * lack of a national proficiency testing system is of particular concern in the area of cytology * * * and that lack of a Federal proficiency testing requirement and other quality assurance standards for cytology may endanger the health of

American women.'' *See,* S. Rep. No. 561, 100th Cong., 2nd Sess. 3–4 (1988).

B. Statutory History

The CLIA amended section 353 of the Public Health Service Act (PHSA) (42 U.S.C. 263a). Among other things, CLIA established minimum standards for all clinical laboratories in the United States performing testing on human specimens for health purposes. The CLIA statute required the Secretary of the Department of Health and Human Services (HHS) to develop standards that included personnel qualifications and quality control and quality assurance procedures, and required PT as one measure of ensuring quality laboratory testing. The general laboratory PT requirements at section 353(f)(3)(A) state: ''The Secretary shall establish standards for the proficiency testing programs * * * The testing shall be conducted on a quarterly basis, except where the Secretary determines for technical and scientific reasons that a particular examination or procedure may be tested less frequently (but not less often than twice per year).'' The cytology PT requirements at section 353(f)(4)(B)(iv) vary from the general laboratory PT requirements. They require ''periodic confirmation and evaluation of the proficiency of individuals involved in screening or interpreting cytological preparations, including announced and unannounced on-site proficiency testing of such individuals, with such testing to take place, to the extent practicable, under normal working conditions.''

C. Initial Efforts to Implement Cytology PT

1. Proposed Rule Implementing Cytology PT

In implementing these statutory requirements, CMS proposed cytology PT standards keyed to the individuals who perform the cytology examinations, in accordance with section 353(f)(4)(B)(iv).

On May 21, 1990, we published a proposed rule in the **Federal Register** (55 FR 20896), to establish requirements for CMS approval of PT programs including gynecologic cytology. The rule proposed that programs would be required to use 20 glass slides to test the proficiency of individuals examining Pap smears twice a year. To ensure that all individuals would be able to be tested twice each year, CMS-approved cytology PT programs would be required to provide one unannounced on-site testing event in each laboratory, and no fewer than four announced testing events in each State on an annual basis. CMS would designate the testing sites. The glass slides were to be referenced with a minimum 80 percent agreement in a scientifically defensible manner by at least five physicians certified in anatomic pathology. The diagnosis of each glass slide was to be placed into one of four categories that were based on 1988 Bethesda System terminology (that is, unsatisfactory, normal or negative (infection, reactive and reparative changes), low grade squamous cell abnormalities and high grade squamous cell abnormalities (which also included glandular cell abnormalities and non-epithelial malignant neoplasm). Test slides demonstrating premalignant and malignant lesions were to be confirmed by biopsy with an 80 percent consensus agreement of at least five physicians.

The proposed rule envisioned cytology PT programs using one grading scheme for both pathologists and cytotechnologists. This grading system was to award −1 to 2 points per challenge. The individual's score was to be calculated by adding the point values achieved for each slide, dividing it by the total points for the testing event, and multiplying it by 100. For a 100 point test, the proposed passing score was 80 percent. A rescreen of 500 slides was proposed for any individual who failed the first test event. Any cytotechnologist who failed also had to receive immediate remedial training and education.

In response to the proposed rule, we received 900 letters containing approximately 1700 comments on cytology PT participation and 470 comments on the proposed requirements for approval of cytology PT programs. The major issues identified in the comments to the cytology PT proposed rule were: Biannual testing of individuals rather than testing the laboratory; announced on-site PT versus mailed PT; content of a PT event (number of slides, test material); evaluation of pathologists and cytotechnologists in the same manner, rather than in the context of duties performed; use of the 1988 Bethesda System for reporting PT results; and remedial education and rescreening requirements following failure of a single PT event.

2. Final Rule With Comment

On February 28, 1992, we published a final rule with comment in the **Federal Register** (57 FR 7002). The provisions established in that final rule with comment are still in effect. In response to the public comments on the proposed rule, and based on the experience of State cytology PT programs, we established various requirements at 42 CFR part 493. Section 493.855 requires each laboratory to ensure that each individual examining gynecologic cytology preparations enrolls in a CMS-approved PT program by January 1, 1995, if a program is available, and, participates in at least one (announced or unannounced) PT event per year and obtains a passing score. Testing must be offered on-site at least once per year in each laboratory using a 10 glass slide test set. Individuals must score at least 90 percent to successfully complete the test. Any individual who does not score at least 90 percent on the first testing event must be retested using a 10 slide test within 45 days.

If the individual does not score at least 90 percent on the second testing event, the laboratory must provide him or her with documented remedial training in the area of failure and must ensure that all gynecologic preparations examined by this individual subsequent to the notice of failure are re-examined by someone in the laboratory who obtained at least 90 percent on the cytology PT during the current year. The individual must be retested with a 20 slide test set and score at least 90 percent in order to pass the PT event. If the individual does not score at least 90 percent on the third test, the individual must cease examining patient gynecologic slide preparations immediately upon notification of test failure and not resume examining gynecologic slides until the laboratory ensures the individual obtains at least 35 hours of documented formally structured continuing education. The individual must then be retested on a 20 slide test set and score at least 90 percent to pass the test. As provided for at 42 CFR 493.855, ''[i]f a laboratory fails to ensure that individuals are tested or those who fail a testing event are retested, or fails to take required remedial actions * * * CMS will initiate intermediate sanctions or limit the laboratory's certificate to exclude gynecologic cytology testing under CLIA, and, if applicable, suspend the laboratory's Medicare and Medicaid payments for gynecologic cytology testing in accordance with subpart R of this part.'' The individual may be retested indefinitely after a third failure, but may not resume examining gynecologic specimens until he or she scores at least 90 percent.

Section 493.945 of Subpart I, ''Proficiency Testing Programs for Nonwaived Testing,'' describes requirements for CMS approval of gynecologic cytology PT programs. To be approved, each program must

provide 10 and 20 glass slide test sets that represent the four diagnostic categories (unsatisfactory, negative-benign, low grade squamous intraepithelial lesions, and high grade squamous intraepithelial lesions) as defined in § 493.945(b)(3)(ii)(A), and the test sets must be comparable to ensure equitable testing within and between PT programs. The programs are required to provide on-site testing for each individual enrolled at least once per year including announced and unannounced testing events, and must provide retesting for those individuals who fail any testing event. Technical supervisors (pathologists), who do not perform primary screening (that is, who only examine slides after they have been prescreened by a cytotechnologist) may be tested on slides that have been prescreened to locate potentially abnormal cells by a cytotechnologist who examines slides in their laboratory. There are separate scoring schemes for cytotechnologists and technical supervisors that award −5 to 10 points based on the proximity of the individual's response to the correct response. Individuals receive a maximum of 10 points for every correct response. One provision requires deducting 5 points from an individual who responds that a slide is negative when the correct response is a high grade squamous intraepithelial lesion (HSIL) or cancer (Category D). (An HSIL or cancer (Category D) lesion is one that would require immediate follow-up and treatment due to its severity including: Moderate dysplasia, severe dysplasia, or carcinoma-in-situ or a cancer.) This individual would obtain a score of less than 90 percent even if every other slide in the test set was correctly identified resulting in test failure. In this case, the individual would score 90 points for 9 correct responses and −5 points for incorrectly identifying an HSIL or cancer (Category D) as normal or benign. (The final score would be calculated by deducting 5 points from 90 points for a total of 85 points.)

3. Response to Comments to the February 28, 1992 Final Rule With Comment

Following publication of the February 28, 1992 final rule with comment, we received nearly 300 comments on the cytology PT requirements. Approximately 90 comments addressed participation in cytology PT and over 200 comments addressed the cytology PT programs. The majority of the commenters stated opposition to the cytology PT requirements, and voiced concern about the feasibility and costs associated with the development of a national glass slide PT program that included on-site testing of individuals. Some comments stated that national testing of individuals could not be achieved using glass slides. One organization suggested using media other than glass slides for testing. Other commenters were opposed to the frequency of annual testing, the 90 percent passing score, inclusion of unsatisfactory in the response categories, and grading cytotechnologists in any manner other than based on their ability to separate unsatisfactory or negative categories from those requiring review by the technical supervisor.

4. Final Rule Extending Cytology PT Enrollment Date

As of January 1, 1994, (the enrollment deadline specified in the February 28, 1992 final rule with comment), no cytology PT program had met the CLIA requirements for approval. On December 6, 1994, we published a final rule with comment (59 FR 62606) in the **Federal Register**, to allow additional time for programs to seek approval as a cytology PT provider, and to allow individuals an extension of the compliance date for enrollment in a CMS-approved cytology PT program.

The December 6, 1994 final rule with comment changed the compliance date for cytology PT enrollment from January 1, 1994 to January 1, 1995. Under that rule, enrollment was required by the compliance date if a CMS-approved program was available in the State in which the individual was employed. For individuals engaged in the examination of gynecologic cytology preparations who were employed in a State in which a CMS-approved cytology PT program was not available beginning January 1, 1995, enrollment and participation in a CMS-approved cytology PT program would be required at the point that a program became available.

5. Litigation Regarding the February 28, 1992 Regulations

On January 14, 1993, the Consumer Federation of America and Public Citizen filed a lawsuit in the United States District Court for the District of Columbia (the Court), challenging the HHS implementation of CLIA (*Consumer Federation of American and Public Citizen* v. *HHS,* 906 F. Supp., 657 (D. D.C. 1995), reversed in part and remanded in part). Among other things, plaintiffs argued that the cytology PT regulations violated the statutory mandate for cytology PT to ''* * * take place, to the extent practicable, under normal working conditions, * * *'' The plaintiffs' suit indicated that the February 28, 1992 final rule with comment limited cytotechnologists to examining no more than 100 slides in a 24 hour period, and that they must be allowed at least 8 hours to complete the examination of 100 slides. These provisions result in an average rate of review of 12.5 slides per hour. However, with respect to PT, the February 28, 1992 final rule with comment included a lower slide examination rate of 5 slides per hour (the 10 slide test was to be completed within 2 hours and the 20 slide test was allotted 4 hours).

On August 29, 1995, the Court ruled that the regulations did not strictly conform to the statutory mandate. The Court ordered HHS to engage in expedited rulemaking (within 90 days of its order), to publish a proposed rule in the **Federal Register** requesting public comment on the PT regulations for cytology personnel in light of 42 U.S.C. 263a(f)(4)(B)(iv) (providing that individuals should be tested, to the extent practicable, under normal working conditions). The existing regulations were to remain in effect pending the issuance of a final rule as specified by the Court.

In accordance with the Court's order, on November 30, 1995, we published a proposed rule in the **Federal Register** (60 FR 61509). The rule proposed changing the provisions that authorized the examination of cytology PT slides at a rate of 5 slides per hour to a rate of 12.5 slides per hour. In order to achieve this PT workload rate, the rule proposed changing the cytology PT 10 slide test's duration from 2 hours to 45 minutes per testing event. The rule also proposed to limit the time for a 20 slide retest to 90 minutes instead of 4 hours. The proposed rule stated that there might be other options for complying with the statutory mandate (providing that individuals should be tested, to the extent practicable, under normal working conditions), and specifically requested comments on options.

We received approximately 760 comments in response to the proposed rule from cytotechnologists, pathologists, professional organizations, and other members of the public. Nearly 100 percent of the comments stated opposition to the proposed rate change. Commenters stated that PT differs from the working conditions associated with the examination of patient specimens; therefore, the time frame for a PT examination should not be equated to an individual's workload rate. Reasons cited for opposing the proposed PT workload rate change included the following:

• Cytology PT requires screening a higher number of abnormal slides than is routinely seen in the patient workload.
• The individual's workload limit is a maximum rate and not a target rate.
• The staining of PT slides may vary from the laboratories' patient slides.
• The individual screening rates differ.
• The reporting format for PT results is different from the laboratory format.
• There is more stress associated with PT.

Approximately 350 comments were received in response to the proposed rule's request for comments on expanding the CLIA provisions to permit the use of computer-based proficiency testing (CBPT) as an alternative to glass slide proficiency testing (GSPT). While a number of the comments indicated that individuals were apprehensive about a CBPT program, many commenters stated that a national GSPT program was not feasible and provided suggestions for implementing a CBPT program.

HHS appealed the District Court's ruling and sought to re-establish the cytology PT testing time frame established in the February 28, 1992 final rule with comment. In a decision dated May 21, 1996, the United States Court of Appeals for the District of Columbia reversed and remanded those aspects of the District Court's ruling. It provided that HHS could either offer an adequate explanation for the original cytology PT rule and reinstate that rule or issue a final rule in response to the comments received on the November 30, 1995 proposed rule (60 FR 61509) (*Consumer Federation of America and Public Citizen* v. *Department of Health and Human Services*, 83 F.3d 1497, 1506–07 (D.C. Cir. 1996)).

On March 17, 2000, we published a notice in the **Federal Register** (65 FR 14510) withdrawing the November 30, 1995 proposed rule, providing further explanation of the rationale behind the 1992 cytology PT provisions and reinstating the time frame for PT contained in the February 28, 1992 final rule with comment. The rationale provided further explanation for the original cytology PT rule provisions on test duration as required by the Court. It documented that the time provided for testing represented as reasonable an approximation of normal working conditions is possible under the circumstances. In the supplementary statement, HHS noted that the February 28, 1992 final rule with comment stipulated time frame for cytology PT of 5 slides per hour was based on the time frame used by the cytology PT program developed by the State of Maryland. CMS concluded that this time frame would provide for equitable testing on a national scale allowing individuals sufficient time to complete the test at their normal pace, without unduly restricting or extending the time for examination. This conclusion was reached even though a cytotechnologist who reviews the maximum number of slides per day would screen approximately 12.5 slides per hour. In the supplementary statement, HHS provided the following reasons for this conclusion: (1) A workload of 100 slides is the maximum allowed and not all cytology personnel examine 100 slides each day; (2) PT includes a higher ratio of abnormal to normal slides and should appropriately take longer to review; and (3) PT may include slides with different staining characteristics and test result forms that could be unfamiliar to the cytology personnel and require extra time for reporting results. HHS determined that the 2 hours to examine a 10 slide PT test set and 4 hours to examine a 20 slide PT retest used by the Maryland program were appropriate and took into account differences between examination of slides during normal workdays and during PT.

D. Implementing Cytology PT

1. Request for Proposal

No PT programs requested CMS approval in time for the regulatory deadline of July 1st of each calendar year for nationwide cytology PT testing. In an effort to obtain the 26,000 referenced Pap smears estimated to be needed to provide for a national cytology PT program, the CDC issued a Request for Proposal (RFP) in March 1993, for a contractor to undertake procurement of the glass slides for use in administering the program. Although CDC did not receive any proposals in response to the RFP, they did receive comments from cytology organizations and individuals that echoed the comments previously received in response to the final regulations. The commenters stated that conducting a national GSPT program with on-site testing of individuals was logistically and financially infeasible, due to the expense associated with collecting the requisite number of high-quality glass slides representing appropriate diagnostic categories, and the time that would be needed to assemble, reference, and maintain the collection of slides.

2. 1993 Symposium

In November 1993, the CDC and CMS cosponsored a cytology symposium with the Cytology Education Consortium, (which at that time was composed of the American Society for Clinical Pathology (ASCP), the American Society of Cytology (ASC), the American Society for Cytotechnology (ASCT)), and the College of American Pathologists (CAP), to consider possible alternatives to a national cytology PT program using glass slides. A number of approaches were discussed, including state-administered glass slide programs, mailed glass slide programs, and programs that use photographic image representations (that is, color transparencies, color plates, or digitized computer images) of glass slide specimens instead of glass slides. It was determined that the most promising strategy would be to develop a variety of cytology PT programs to accomplish the mandate specified in Section 353(f)(4)(B)(iv) of the PHS Act—"* * * proficiency testing of such individuals, with such testing to take place, to the extent practicable, under normal working conditions, * * *."

3. Clinical Laboratory Improvement Advisory Committee (CLIAC) Recommendations

The Secretary of HHS is authorized by the Public Health Service Act to establish advisory committees. The Clinical Laboratory Improvement Advisory Committee (CLIAC) was established on February 19, 1992 to provide scientific and technical advice to HHS. CLIAC membership consists of subject matter experts in laboratory medicine, pathology, public health, clinical practice, as well as a consumer representative and a liaison from private industry. Ex officio members represent the HHS agencies that administer the CLIA Program. On December 13, 1993, a CLIAC cytology subcommittee met to review alternative approaches to cytology PT. This meeting was suggested during the 1993 symposium to provide recommendations for consideration by CLIAC. The CLIAC met on December 14 through 15, 1993 to consider the recommendations of the cytology subcommittee. After deliberation, the committee endorsed those recommendations. The CLIAC recommended: (1) That research studies be conducted to define outcomes and evaluate the effectiveness of both glass slide and alternative cytology PT programs; (2) that regulatory revisions be promulgated, as needed, to permit approval of alternative programs; and (3) that statutory changes be pursued to allow cytology PT requirements, like PT requirements for other specialties and subspecialties, to be applied to the laboratory as a whole rather than to individuals. The CLIAC also encouraged

professional organizations and States to develop appropriate programs to meet the February 28, 1992 final rule with comment requirements and make PT available for cytology personnel. The formal proceedings of this CLIAC meeting can be found at the following Web site: *http://www.cdc.gov/cliac/*.

4. Cooperative Agreements to Explore Computer-Based PT

In September 1994, CDC awarded three 1-year cooperative agreements to promote the development of CBPT programs and to evaluate the acceptability of these programs by cytology personnel. These awards were made to the ASCP, New England Medical Center, and Thomas Jefferson University. The three CBPT prototypes were pilot tested at the 1995 spring meetings of ASCP/CAP and the ASCT. More individuals indicated that they preferred the CBPT (68 percent) over GSPT. However, respondents indicated that the three cooperative agreements' CBPT programs did not include a mechanism to fully evaluate locator skills. (Locator skills are those skills necessary to find the abnormal cells on gynecologic cytology preparations.) The three CBPT prototypes were presented to CLIAC in March 1996. The CLIAC stated that the prototypes were adequate to test identification skills, but encouraged CDC to continue development of a prototype that would test locator skills.

5. CDC Computer-Based Prototype, CytoView™

The recommendations from the cooperative agreement pilot evaluations were incorporated into the CBPT prototype developed by CDC, named CytoView™. A full description of this prototype was published in Acta Cytologica. *See*, Taylor R.N., Gagnon M.C., Lange J.V., Lee T.L., Draut R., Kujawski E.: *CytoView™: A Prototype Computer Image-Based Papanicolaou Smear Proficiency Test*, 43 Acta Cytologica 1045–1051 (1999). The first CytoView™ prototype was developed in October 1996 and demonstrated to CLIAC in January 1997.

6. Evaluation of PT as a Measure of Workplace Performance

In January 1995, CDC awarded a 2 year contract to Analytical Sciences Incorporated, to compare the actual work performance of cytology personnel with their PT performance. For each individual, the contractor rescreened 500 previously reported cases to determine a score for individual work performance. The work performance score was then compared to two methods of PT: (1) A GSPT administered by the contractor; and (2) the CytoView™ prototype CBPT administered by the CDC. The study, based on a sample of 85 participants consisting of cytotechnologists (73) and pathologists (12) across the U.S. who performed primary screening (that is, examined slides without the assistance of a prescreening cytotechnologist), was completed in the spring of 1997.

The results of the study were published in the American Journal of Clinical Pathology [Keenlyside R., Collins C.L., Hancock J.S., *et al.: Do Proficiency Test Results Correlate with the Work Performance of Screeners Who Screen Papanicolaou Smears?* (112) American Journal of Clinical Pathology. 769–776 (1999)]. The authors reported a moderate correlation (that is, unlikely to be a chance finding) between performance scores on the 500 slide rescreen and both the GSPT and CBPT. The research model had several limitations including: comparing a 10 slide test to the rescreen of 500 slides; for a few individuals all four diagnostic categories were not present in the 500 slide rescreen; glass slides used in the GSPT and images used in the CBPT were not field validated; and the 42,500 slides rescreened by the 85 participants were not referenced by 3 pathologists.

Study participants were asked to evaluate CytoView™ after completion of the CBPT. While 64 percent of the responses stated that the CBPT was an acceptable alternative, 68 percent favored GSPT. Negative comments about CytoView™ included: The program was slow; the operating system was bulky; an optimal focal plane was not always available; and it did not test the workplace performance of the majority of pathologists, since they were required to screen the entire image.

7. CytoView™ II Development

CytoView™ II was developed in June 1999 by the CDC based on comments received from the CytoView™ evaluation questionnaire. CytoView™ II operates from a laptop computer, displaying images at a faster speed with a fluid focusing mechanism that more closely simulates the microscope and provides an instant display of the field of view at a higher magnification with a single mouse click. An additional feature allows tandem screening by a cytotechnologist or pathologist team. The cytotechnologist marks (dots) areas of the slide and can write comments for the pathologist to review. The pathologist may then review only the marks, the entire slide, or a combination of the two features. The CytoView™ II prototype was demonstrated at the 1999 fall meetings of the ASCP/CAP and ASC.

CDC trademarked the name CytoView™ and in November 2000 a patent was issued on MicroScreen, the software used to capture the interactive images used by CytoView™.

8. Comparison of Glass Slide Testing to Computer-Based Testing

In July 2002, CDC completed a study with the Maryland Cytology Proficiency Testing Program (MCPTP) comparing PT in gynecological cytology using glass slides to virtual slides using the CytoView™ II prototype. To compare performance, a total of 111 individuals (52 pathologists and 59 cytotechnologists) from participating in-state laboratories were administered the two proficiency tests. The routine annual test of the MCPTP was administered to individuals following normal practice. CytoView™ II was designed to emulate the MCPTP glass slide examination in which the individual selects the order of slide viewing and may change answers up until the test is submitted. Like the glass slide test, when a pathologist chose to examine a marked test, CytoView™ II allowed the pathologist to review areas marked by the cytotechnologist and to see the diagnostic category chosen by the cytotechnologist. The slides used by the MCPTP were validated during 11 years of testing. The virtual slides were captured from the MCPTP's glass slides but were not field validated as images. The study recognized the need for field validation of all slides (glass and virtual) and concluded that, if both glass and virtual slides are referenced and field validated, the result of testing would be equivalent. This study was published in Acta Cytologica [Gagnon M., Inhorn S., and Hancock J., *et al., Comparison of Cytology Proficiency Testing-Glass Slides* vs. *Virtual Slides*, 48 Acta Cytologica 788–794 (2004).] If digital images are permitted as cytology PT challenges, this system could be available for cytology PT.

9. Approval of Programs

Two State-operated programs applied for CMS approval in 1993. The MCPTP met the regulatory cytology PT requirements and was subsequently granted CMS approval in May 1994 for testing to begin calendar year 1995. The MCPTP developed its cytology program to provide PT for all individuals (in-state and out-of-state) who evaluate gynecologic cytology preparations from residents of Maryland. The MCPTP did not possess sufficient materials to offer cytology PT nationally. After applying for approval in 1993, the Wisconsin

Cytology Proficiency Testing Program subsequently withdrew its application for approval in October 1994, when Wisconsin was unable to obtain a sufficient number of referenced glass slides necessary to provide a statewide program.

In 1997, the CAP submitted an application to become an approved cytology PT program. The CAP requested the use of in-house proctors, selected from the laboratory's staff, to administer the PT. The CDC and CMS agreed with the proposal to use proctors to administer the PT and notified CAP of its determination. However, the initial application as well as subsequent submissions (1997 through 2004) that CAP provided to the agencies were not in conformance with the CLIA regulatory requirements and could not be approved. In November 2004, the submissions were ultimately withdrawn by CAP and replaced with a significantly revised and more comprehensive application in March 2005.

In March 2004, The Midwest Institute for Medical Education (MIME) submitted an application for approval of a gynecologic cytology PT program under CLIA. After careful review, the program was approved and national testing of all individuals was required beginning on January 1, 2005.

In December 2004, CMS mailed a memorandum to the Directors of State Survey agencies informing them of the enforcement responsibilities effective for calendar year 2005. The memorandum stated that the PT implementation was to first emphasize an educational approach and that no sanctions would be imposed against laboratories unless they failed to comply with the following dates: (1) Ensure that all individuals are enrolled in a CMS approved cytology PT program by June 30, 2005; (2) ensure all individuals have been tested at least once by April 2, 2006; and (3) ensure that affected individuals achieve a passing score by December 31, 2006.

In December 2004, CMS also held conferences with the CMS regional offices and State Agencies to provide information on the enforcement dates that laboratories must meet. In January 2005, CMS mailed individual letters to all laboratories certified in cytology notifying them of the required enrollment and participation in a CMS-approved cytology PT program for all individuals examining gynecologic preparations. In February 2005, CMS held a Partners in Laboratory Oversight Meeting with the accreditation organizations and States with CLIA-approved licensure programs to provide information on the approved program and enforcement responsibilities. CDC and CMS participated in numerous audio conferences with the cytology professional organizations to inform laboratories and individuals of the need to participate in the MIME program. CMS held national Open Door Forum teleconferences in January 2005 and March 2006 inviting all laboratories and the public to participate in discussions and ask questions about the requirements, and providing additional venues for CMS to further explain the mechanics of the PT process. CMS developed and continues to maintain a Web site, *http://www.cms.hhs.gov/clia*, containing information on PT, as well as a document for download titled ''Informational Supplement'' that is specific to cytology PT.

In February 2005, the ASCP submitted an application for approval in 2006. In March 2005, the CAP submitted its application for approval to provide PT for the 2006 testing cycle. The CAP program was approved September 1, 2005 for testing to begin in January 2006. The ASCP acquired the MIME program on February 26, 2006 and met the requirements for testing in 2006. Currently there are 3 CMS-approved gynecologic cytology PT programs; the MCPTP, ASCP, and CAP.

10. Opposition to Cytology PT

In November 2004, CAP sent a letter to HHS requesting a 1 year moratorium on requiring individual enrollment in the MIME program. Following this letter, CDC and CMS met separately with CAP and the ASCP regarding the requested moratorium and their pending applications. At these meetings, the organizations also asked for expedited reviews of their PT program submissions to receive approval by January 1, 2005. Expedited reviews were granted; however, neither program met the requirements for approval under CLIA. The CAP application was subsequently revised, resubmitted, and approved by CMS to begin cytology PT in calendar year 2006.

A coalition of State and national pathology societies submitted a letter in June 2005 asking the Secretary of HHS to re-evaluate the ''relevance, validity, and ultimate effectiveness'' of cytology PT. The letter also suggested that if cytology PT were to be continued, it should be conducted on an educational basis. The letter called upon Congress to intervene and for HHS to thoroughly review the existing regulation.

E. Recent Congressional Actions

On September 20, 2005, 103 Members of the United States House of Representatives sent a letter to the Secretary of HHS expressing concern about CMS' implementation of the 1992 requirements. The letter specifically addressed the absence of provisions addressing technology advancements made after the rule was written and suggested that the testing of individuals, as opposed to performance by the laboratory overall, was not based in statute but was devised by CMS in the 1992 regulations. It also suggested that the imposition of Federal penalties on individuals supplanted the licensing authority of State governments. The letter requested that CMS suspend cytology PT until the regulations were revised.

We carefully reviewed all the concerns raised about cytology PT in the letter from these Members of Congress and concluded that they did not warrant interruption of the ongoing testing of individuals required by statute. CMS (in its former status as the Health Care Financing Administration) and CDC had previously considered these issues and declined to make changes that we believed to be contrary to statutory requirements. However, we had modified the cytology PT requirements where possible, for example, reducing testing to once-per-year rather than multiple times per year. (*See* § 493.855(a) of the CLIA final rule with comment published February 28, 1992).

The contention that laboratories should be tested rather than individuals is contrary to the plain language of the statute, and therefore was not considered in the development of the cytology PT program and was subsequently ruled out by CLIAC in considering possible refinements to the program. In addition, findings from individual testing in the State of Maryland indicated that certain individuals and certain subgroups (for example, pathologists working without cytotechnologists) had higher rates of test failure that would probably not be identified if cytology laboratories were scored as a whole rather than scoring each individual as required by the statute and current regulations.

We stated our intention to review the entire program after a full year's worth of national data were available and committed to working with the stakeholders and the CLIAC. We have fulfilled these commitments, giving rise to this proposed rule, as discussed in section II of the preamble.

On November 9, 2005, in the 109th Congress, the Proficiency Testing Improvement Act of 2005 (H.R. 4268) was introduced in the House of Representatives. The legislation would have prohibited the Secretary of HHS

from conducting laboratory PT of individuals involved in screening or interpreting cytological preparations for 1 year and required the Secretary to revise the PT requirements before resuming the program in order to (1) reflect the collaborative clinical decision-making of laboratory personnel; (2) revise grading or scoring criteria to reflect current practice guidelines; (3) provide for testing to be conducted no more often than every 2 years; and (4) make other revisions as necessary to reflect changes in laboratory operations and practices since the original PT regulations were promulgated. This bill was referred to the House Committee on Energy and Commerce on November 9, 2005 and to the Subcommittee on Health on November 22, 2005.

On December 16, 2005, a second Proficiency Testing Improvement Act of 2005 (H.R. 4568) (identical to H.R. 4268) was introduced in the House of Representatives. This bill passed the House on December 17, 2005 and was referred to the Senate Committee on Health, Education, Labor, and Pensions on January 27, 2006. The Senate took no action on this bill.

On September 21, 2006, the Cytology Proficiency Improvement Act of 2006 (H.R. 6133) was introduced in the House of Representatives. This bill required the Secretary of HHS to revise national quality assurance standards to include requirements for each clinical laboratory to (1) ensure that all individuals involved in screening and interpreting cytological preparations participate annually in an approved continuing medical education program in gynecologic cytology that provides each participant with gynecologic cytologic preparations designed to improve locator, recognition, and interpretive skills; and (2) maintain a record of such program results. The Secretary was also required to terminate the existing individual cytology PT program. This bill was referred to the House Committee on Energy and Commerce on September 21, 2006 and to the Subcommittee on Health on October 2, 2006.

On November 15, 2006, an identical bill to H.R. 6133 was introduced in the Senate (S. 4056), and was referred to the Senate Committee on Health, Education, Labor, and Pensions.

In December 2006 the 109th Congressional session came to an end with no action taken on H.R. 6133 or S. 4056.

In the 110th Congress, the Cytology Proficiency Improvement Act of 2007 (H.R. 1237) was introduced in the House of Representatives on February 28, 2007, and was referred to the House Committee on Energy and Commerce on that date, and to the Subcommittee on Health on March 1, 2007. This bill was identical to H.R. 6133 from the 109th Congress.

A Senate version of the Cytology Proficiency Improvement Act of 2007 (S. 2510) was introduced on December 18, 2007. While very similar to H.R. 1237, this bill included some additional requirements for how the results of an individual's participation in continuing medical education would be used. S. 2510 was referred to the Senate Committee on Health, Education, Labor, and Pensions.

H.R. 1237 was subsequently amended to be identical to S. 2510 and was passed by the House of Representatives on April 8, 2008.

In December 2008 the 110th Congress ended with the Senate having taken no action on S. 2510.

II. Rationale for Proposed Rule

CLIA regulations for cytology PT were published in 1992 and implemented in Maryland in January 1995 following approval of the Maryland Cytology Proficiency Testing Program (MCPTP). The first program approved for nationwide cytology PT was the MIME program in 2005.

To address the numerous concerns voiced about cytology PT implementation, the CMS presented a status report on cytology PT implementation during the CLIAC meeting in February 2005 and described the Cytology Personnel Records System (CYPERS). CYPERS was developed and implemented by us to maintain the confidentiality of an individual's enrollment, participation, and PT scores, and to allow us to monitor individual performance in cytology PT. The notice for the new Privacy Act System of Records, CYPERS, was published in the **Federal Register** on January 14, 2005 (70 FR 2637). Also at the February 2005 CLIAC meeting, public comments opposing the implementation of cytology PT through the MIME program were presented by the ASC and ASCP, highlighting their concerns which included, (1) perceived problems with the scoring scheme and validation of slides; and (2) the regulations' failure to consider the semi-automated technology used in current practice. CLIAC recommended consideration be given to revising the cytology PT regulations ''based on current practice, evidence-based guidelines and anticipated changes in technology'' as reflected in updated comments from the professional organizations and the public. (These recommendations and proposed revisions are documented on the CLIAC Web site at *http://www.cdc.gov/cliac/cliac0205.aspx*, summarizing the February 2005 CLIAC meeting).

In September 2005, CLIAC recommended formation of a cytology PT workgroup to consider potential changes to the regulations. In addition, comments and data were solicited from professional organizations on the potential impact of any proposed regulatory revisions on laboratories, cytology PT programs, and the cytology workforce.

In November 2005, CDC and CMS staff met with the Cytology Education and Technology Consortium (CETC) to solicit suggestions from the professional organizations represented in the consortium (ASCP, CAP, International Academy of Cytology (IAC), ASC, ASCT and the Papanicolaou Society of Cytopathology (PSCO)) and their members for recommendations for specific changes to the regulations. Following this meeting, the CETC and the ASCT provided comments identifying potential issues to be considered for regulatory revisions. The comments provided by the CETC were endorsed by all member organizations with the exception of CAP. The issues identified included: Testing the individual compared to testing the laboratory; impact of new technology; frequency of testing; number of challenges per testing event; categories of challenges; grading scheme point values; validation of challenges; remediation for failure; testing site; and confidentiality.

At the February 2006 CLIAC meeting, CMS provided preliminary data on the status of 2005 cytology PT results. CDC provided information on the process for revising the regulations and announced the formation of a cytology PT workgroup. The purpose of the workgroup, which was comprised of practicing pathologists and cytotechnologists, was to develop suggestions for proposed revisions to the cytology PT regulations and to present their findings to CLIAC for consideration in making recommendations to HHS for revisions to the regulations.

In March 2006, the cytology PT workgroup met for 2 days to develop suggestions for proposed revisions to the cytology PT regulations. These suggestions included: Using the term ''challenges'' instead of ''slides'' to accommodate other testing media; defining challenges as case equivalent (glass slides, virtual slides, or other approved media); reducing the frequency of testing; increasing the

number of challenges per testing event; requiring field validation of challenges with disclosure of the validation process to participants by the PT program; and changing the scoring scheme for pathologists and cytotechnologists to eliminate the automatic failure for misdiagnosis of a HSIL or cancer (Category D).

At a June 2006 CLIAC meeting, CLIAC reviewed the suggestions for regulatory revisions proposed by the workgroup. The CLIAC made the following recommendations: (1) Use the preamble to encourage laboratories to participate in educational laboratory programs in addition to individual proficiency testing; (2) require oversight organizations/agencies and surveyors to determine if laboratories participate in educational programs and provide laboratories with identification of available resources; (3) change the term ''slides'' to ''challenges'' to allow for the use of virtual slides; (4) define a challenge as a case equivalent-glass slide, virtual slide, or other approved media; (5) add a requirement for a transition phase for all new technology (for example, virtual slides), and to allow the individual to request retesting with glass slides; (6) reduce the frequency of testing to a 3-year test cycle using 20 challenges for every test (initial and retest); (7) retain four diagnostic categories and continue to require at least one challenge from each of the four categories; (8) change language to state ''individuals who score <90 percent'' (as opposed to ''who fail''); and (9) change the grading scheme to a unified model for both cytotechnologists and pathologists and eliminate automatic failures for misdiagnosis of one HSIL or cancer (Category D). The following grading scheme was recommended by the CLIAC:

MODEL X–20 SLIDE TEST—UNIFIED

Correct response	Examinee response			
	A—UNSAT	B—NEGATIVE	C—LSIL	D—HSIL
A—UNSAT	5	0	0	0
B—NEGATIVE	2.5	5	0	0
C—LSIL	0	0	5	5
D—HSIL	0	−5	5	5

CLIAC also made recommendations for PT programs, including the following: (1) Require biopsy confirmation of HSIL or cancer (Category D) challenges, but not LSIL (Category C) challenges; (2) require field validation, monitor challenges continuously, and remove challenges that fail field validation; (3) require validation procedures to be disclosed by the PT program; (4) allow the PT programs to determine alternate options for test sites for missed tests (that is, excused absences and retesting) (they noted that the preamble could be used to encourage more options for test sites); (5) allow the PT programs to determine the proctor requirements; (6) provide more specific educational feedback on result discrepancies; and (7) require PT programs to disclose the appeal process in writing. A summary of this meeting is found at *http://www.cdc.gov/cliac/*.

CDC and CMS met with the 3 approved cytology PT programs on August 28, 2006 to solicit input on operational issues. Issues discussed included: Quality assurance of the testing process; proctor requirements; testing sites; validation of testing materials; biopsy confirmation of HSIL or cancer (Category D) and LSIL (Category C); comparable test sets; and administrative issues. In addition, programs were asked to provide data for the impact analysis.

Listed below is a chronology of events related to the implementation of cytology PT:

CHRONOLOGY OF EVENTS—IMPLEMENTING CYTOLOGY PT

October 1988	The Clinical Laboratory Improvement Amendments (CLIA) were enacted, amending the Public Health Service Act.
May 1990	CMS published a CLIA proposed rule.
February 1992	CDC and CMS published a CLIA final rule with comment period.
January 1993	Consumer Federation of America and Public Citizen filed a lawsuit challenging the timeframe for cytology PT.
January 1993	State of Maryland Cytology PT Program submitted an application for approval.
March 1993	CDC published a request for proposal to obtain referenced Pap smear glass slides for a national cytology PT program.
November 1993	CDC, CMS, and cytology organizations co-hosted ''Cytology PT Symposium'' to discuss alternatives to glass slide testing.
November 1993	State of Wisconsin submitted an application for cytology PT program approval.
December 1993	The CLIAC made recommendations concerning cytology PT.
May 1994	CMS approved the Maryland and Wisconsin State PT programs for testing in 1995. The Maryland State PT program has been reapproved annually since 1995.
September 1994	CDC awarded three cooperative agreements for development of prototype computer-based cytology PT programs.
October 1994	State of Wisconsin terminated its program prior to implementation.
December 1994	CDC and CMS published a rule extending the cytology PT enrollment date.
January 1995	CDC awarded a contract to compare glass slide PT and computer-based PT to workplace performance.
April 1995	CDC and the cooperative agreement awardees pilot tested the three cytology CBPT prototypes at national cytology meetings.
November 1995	CDC and CMS published a proposed rule to change the timeframe allowed for cytology PT testing based on a court order from the *Consumer Federation of America and Public Citizen* v. *HHS*, lawsuit (906 F.Supp., 657 (D. D.C. 1995).
October 1996	CDC developed a computer-based prototype called CytoView™ to test locator and interpretive skills.
March 1997	CAP submitted an application for cytology PT program approval.
June 1999	CDC developed CytoView™ II.

CHRONOLOGY OF EVENTS—IMPLEMENTING CYTOLOGY PT—Continued

March 2000	CDC and CMS withdrew the 1995 proposed rule and reinstated the 1992 PT timeframes pursuant to ruling by the appellate court.
July 2002	CDC and the State of Maryland completed a study comparing individual performance on glass slide PT and CytoView™ II.
March 2004	Midwest Institute for Medical Education (MIME) submitted an application for cytology PT program approval.
September 2004	CMS approved the MIME program to initiate testing in 2005.
November 2004	CAP requested a one year moratorium on the requirement to participate in cytology PT.
November 2004	CAP withdrew its application for program approval.
January 2005	CMS held an Open Door Forum to inform laboratories of the first approved national cytology PT program and respond to questions.
January 2005	CMS published a notice announcing a new System of Records, CYPERS.
February 2005	CMS held a Partners In Laboratory Oversight Meeting with accreditation organizations and States with CLIA-approved licensure programs to inform them of the requirement for all laboratories performing gynecologic cytology to participate in cytology PT.
February 2005	CMS presented details of the PT requirements for cytology laboratories to the CLIAC. The CLIAC recommended revisions be made to the regulations.
February 2005	ASCP submitted an application for cytology PT program approval.
February 2005	MIME initiated testing of cytology laboratories.
March 2005	CAP submitted a new application for cytology PT program approval.
June 2005	CAP sent a letter signed by State and national organizations to HHS expressing concern about cytology PT implementation. Response sent August 2005.
June 2005	ASCP submitted a new application for cytology PT program approval.
August 2005	State of Maryland and MIME cytology PT programs were reapproved for testing in 2006.
September 2005	CAP program was approved to initiate cytology PT in 2006.
September 2005	CLIAC recommended convening a cytology PT workgroup to consider potential changes to the cytology PT requirements.
September 2005	Some Members of the House of Representatives sent a letter to HHS expressing concern about implementation of the cytology PT regulation.
November 2005	At the CETC meeting, preliminary 2005 cytology PT results were presented and organizations were invited to submit suggestions for changes to revise the cytology PT regulation.
November 2005	H.R.* 4268 introduced—would have suspended cytology PT for one year.
December 2005	House of Representatives passed H.R. 4568 (identical to H.R. 4268) and sent it to the Senate.
January 2006	H.R. 4568 referred to Senate Health, Education, Labor and Pensions (HELP) Committee for consideration.
February 2006	ASCP acquired the MIME program.
February 2006	CDC announced the CLIAC Cytology PT workgroup would meet in March 2006.
March 2006	CLIAC Cytology PT workgroup met.
March 2006	CMS held a second Open Door Forum to respond to questions about implementation of cytology PT.
June 2006	Workgroup recommendations were reported to the CLIAC, which considered the recommendations and made its own recommendations to HHS for revisions to cytology PT requirements.
August 2006	CDC and CMS met with PT program representatives to solicit comments on the administration and operation of cytology PT.
September 2006	H.R. 6133 introduced—required the Secretary to terminate PT and replace with continuing medical education requirement.
November 2006	S.** 4056 introduced (identical to H.R. 6133).
December 2006	109th Congressional session ended without enactment of any cytology PT bill.
December 2006	State of Maryland, ASCP, and CAP cytology PT programs were reapproved for testing in 2007.
February 2007	H.R. 1237 introduced (identical to H.R. 6133). This bill was referred to the House Committee on Energy and Commerce, Subcommittee on Health.
December 2007	S. 2510 introduced (similar to H.R. 1237). This bill was referred to the Senate Committee on Health, Education, Labor, and Pensions (HELP).
April 2008	H.R. 1237 amended (so identical to S. 2510) and passed by the House of Representatives—would terminate cytology PT and replace it with continuing medical education requirement.
December 2008	110th Congressional session ended without enactment of any cytology PT bill.

Note to Reader:
* H.R. #### means a bill introduced in the United States House of Representatives.
** S. #### means a bill introduced in the United States Senate.

III. Provisions of the Proposed Regulations

This section provides an overview of the proposed revisions to the CLIA requirements for gynecologic cytology PT specified in Subpart A— General Provisions, § 493.2 Definitions; Subpart H— Participation in Proficiency Testing for Laboratories Performing Nonwaived Testing, § 493.803 Condition: Successful participation; Subpart I— Proficiency Testing Programs for Nonwaived Testing, § 493.905 Nonapproved proficiency testing programs, and § 493.945 Cytology; gynecologic examinations, established by the February 28, 1992 final rule with comment.

In addition, since the specialty of pathology includes, for purposes of proficiency testing, only gynecologic examinations within the subspecialty of cytology, we are proposing to replace the Condition: Pathology at § 493.853 with the new Condition: Cytology: gynecologic specimen examinations at § 493.853. We are proposing to remove and reserve § 493.855 Standard; Cytology: gynecologic examinations. The requirements currently at § 493.855 will be moved to a new condition section (that is, § 493.853 Condition: Cytology: gynecologic specimen examinations). We are proposing this change because no proficiency testing is required for histopathology (the other subspecialty in pathology). This change is needed to change cytology proficiency testing from a standard to a condition or we would be unable to limit the certificate in such a way as to

address cytology alone as opposed to all of pathology. We believe that if we do not propose this change, it could lead to the unintended consequence of taking an enforcement action in other subspecialties of pathology where problems do not necessarily exist.

We are soliciting specific comments on these proposed changes. The proposed revisions are based on our experience with the current cytology PT requirements, CLIAC recommendations made in June 2006, input from cytology PT programs, and comments solicited from the cytology organizations.

A. Cytology Challenges and New Technology

The requirements currently at § 493.855(b) specify that individuals be tested using glass slides, which was the standard of practice when the February 28, 1992 final rule with comment was published. Following the 1992 publication, semi-automated screening (computer-assisted and location-guided instruments) was developed for the evaluation of cytology preparations on glass slides. In March 2006, the CETC indicated that an increasing number of laboratories are routinely using newer technology to replace the traditional manual screening of conventional Pap smears, and stated that testing these laboratories in the manner described in the February 28, 1992 final rule with comment is inconsistent with the statutory language requiring testing of individuals ''under normal working conditions.'' The CETC further stated that the proposed PT requirements should accommodate technology currently in use in laboratories, and should be flexible enough to accommodate any technologies that might be used in the future, such as digital imaging. The ASCT suggested that PT options should be available for those individuals using semi-automated technology if requested, as well as glass slide challenges for manual examination.

The CLIAC recommended changing the regulatory language of ''slides'' to ''challenges.'' Several CLIAC members commented that the use of the term ''challenges'' would allow flexibility to PT programs transitioning from manual testing to newer technology and to individuals in selecting the testing media with which they are most familiar for examining patient specimens. The CLIAC subcommittee in their June 2006 meeting also recommended a phase-in period, including pilot testing, be required for programs that initiate testing using new technology.

Based on this input and to allow more flexibility, we are proposing to change the terminology ''glass slides'' to ''cytology challenges'' to allow for the approval of programs that use glass slides as well as semi-automated screening protocols, digital images, or other testing media in the future. In this rule, we are proposing at § 493.2 to revise the definition for ''challenge'' and add the definition ''cytology challenge'' which we propose will mean ''a sample consisting of gynecologic cytology material that is used to evaluate the individual's locator and identification skills. Cytology challenge material may include glass slides, digital images, or other CMS approved testing media.'' Presently, CMS is considering requiring programs to pilot test any new testing media and submit their data in their next application for approval. We are soliciting comments on the contents of this proposed rule, specifically:

- Is the proposed definition for ''cytology challenge'' appropriate to address future technological advances?
- Should criteria be included in the regulations for pilot testing before CMS approval of any new cytology testing media? If so, please specify the appropriate criteria.
- Should pilot testing include a comparison to current technology? What is an acceptable comparison?
- If specific criteria for pilot testing are required, what burden would be incurred by PT programs and laboratories participating in a pilot test?
- Would requiring pilot testing cause an increase in the cost of cytology PT?

B. Testing Individuals

The requirements in the February 28, 1992 final rule with comment reflected the provision in the CLIA statute at section 353(f)(4)(B)(iv) of the Public Health Service Act requiring ''periodic confirmation and evaluation of the proficiency of individuals involved in screening or interpreting cytological preparations, including announced and unannounced on-site testing of individuals, with testing to take place, to the extent practicable, under normal working conditions''. The CETC commented that the provision requiring testing of individual cytotechnologists and pathologists was the most troubling aspect of the statute. The CETC suggested that testing the laboratory as a whole, as is the case with non-cytology PT, would be a better approach for assuring the quality of laboratory results. The CETC suggested enrolling each laboratory on an annual basis with no formal enrollment of individuals, noting that individuals would be periodically tested through participation in laboratory PT.

Several CLIAC members suggested an approach to PT that would be consistent with the presentation made by the CAP during the meeting's public comment period. CAP suggested during the public comment period that cytology PT be modified to make it more consistent with the regulatory approach of the Mammography Quality Standards Act (MQSA). The CAP also suggested that the impetus for the MQSA was similar to CLIA because of similar quality-of-care concerns for diagnostic screening services and the same regulatory objective to reduce false negative rates. The Food and Drug Administration (FDA) does not agree with the CAP's additional assertion that, in implementing the mammography standards under MQSA, the FDA rejected PT as an assessment tool due to the lack of consensus on testing standards and measurements. FDA does agree that it instead focused on assessing the competency of the facility by evaluating outcomes produced by the facility. CAP requested that HHS consider an approach similar to the MQSA that would incorporate laboratory outcomes assessments and use other outcome measures, for example evaluation of laboratory QC and review of previously evaluated cases. While this approach for evaluating laboratory performance may have merit, it would require Congress to change CLIA to eliminate the requirement for the evaluation of an individual's proficiency. As such this cannot be addressed through rulemaking, and only changes to individual testing are included in this proposed rule. Through inspections that evaluate laboratory quality control (QC) and the rescreening of a sample of slides previously examined by the laboratory's cytotechnologists and pathologists, CMS has continued to identify serious problems, including significant misdiagnoses. These findings appear to demonstrate the need for continued PT of individuals.

The CLIAC noted that CAP, as an accreditation organization for many cytology laboratories, currently requires its accredited laboratories to participate in an educational peer comparison program in gynecologic cytology in addition to the required individual participation in cytology PT. CLIAC recommended that laboratories be strongly encouraged to participate in educational programs. While not required under CLIA, CMS has always encouraged laboratory participation in educational programs in gynecologic cytology as well as participation in

individual PT. The CLIAC recommended that oversight organizations and agencies, as part of their inspection process, determine whether laboratories participate in educational programs and for those not participating, assist in identifying available educational programs. CMS anticipates adding this recommendation to Appendix C of the State Operations Manual (CMS Pub. 7).

We are soliciting comments on the following:

- Should enrollment and participation in an educational program be required for all cytology laboratories? If so, how would this enrollment be monitored by CMS?
- If enrollment and participation in educational programs were to be required, what criteria would be appropriate for CMS to adopt through rulemaking to evaluate these programs?
- If enrollment and participation in educational programs were to be required, how might CMS monitor or evaluate an individual's participation in such a program?
- If educational programs were required, what enforcement actions might be appropriate for laboratories if laboratories/individuals did not participate in the required programs?

C. Frequency of Testing

The requirements currently at § 493.855(a), specify that laboratories must ensure that each individual engaged in the examination of gynecologic preparations participates in cytology PT at least once a year. Comments received from the CETC and ASCT stated that annual testing is excessive since there is no evidence that cytology screening and interpretive skills deteriorate after 1 year. The CETC further explained that cytology PT of individuals is not analogous to clinical laboratory PT which is dependent on instrument calibration and reagents that can vary by lot number. The CETC suggested the interval between testing events be lengthened to 5 years for well-trained cytology professionals, who assess cervical cytology preparations on a regular basis. The ASCT indicated that other safeguards are in place in cytology, for example, the biennial inspection of laboratories, and the requirements for 10 percent random rescreening of all negative specimens, correlation between cytology and histopathology reports, if available, and retrospective review of all negative specimens from the previous 5 years when a current HSIL or cancer (Category D) is identified. The ASCT suggested the testing interval for individuals be every 3 years.

At the June 2006 CLIAC meeting, The New York State Department of Health Cytology PT Program presented performance data, which revealed that individual failure rates plateaued over time and did not tend to increase after switching from annual to biennial testing. Frequencies other than every 2 to 3 years were also discussed. However, a concern was expressed that less frequent testing may allow poor performers to go undetected, thus jeopardizing the quality of Pap smear testing. After deliberations, the CLIAC recommended testing of individuals every 3 years.

In an effort to balance the quality concerns with the desire to reduce the testing burden, we are proposing at § 493.945(a) and (b) to reduce the frequency for gynecologic cytology testing from annual to every 2 years and increase the number of cytology challenges from 10 to 20 per testing event.

Comments are being solicited on the following questions which must be considered with the proposed grading changes that follow:

- How many cytology challenges per test event are appropriate to assess individual performance?
- Should annual testing continue to be required with 10 slides per test?
- Is 2 years an appropriate testing interval using 20 slides per test?
- Why would a testing frequency longer than every 2 years be appropriate?
- If an individual is allowed to pass a 20 cytology challenge test when an HSIL or cancer (Category D) cytology challenge is reported as Normal or Benign Changes (Category B), how long should the timeframe be between testing events?
- What type of data should be collected to determine if a longer interval between testing is appropriate? Who should collect the data? How long should the data be collected?
- What types of data are needed to validate testing less frequent than annually?

D. Number of Cytology Challenges

As currently specified at § 493.855(b), each individual is required to be tested with 10 glass-slide challenges. If a score of at least 90 percent is not achieved, an individual has not successfully completed the test and must be retested with an additional 10 glass slide test set. If the individual does not achieve at least 90 percent on the retest, each subsequent retest must include 20 glass slide challenges. The ASCT questioned whether a 10 slide test has the ability to accurately assess proficiency. However, the ASCT acknowledged that the increased time and cost required to administer a 20 challenge test might not be justified. The ASCT also noted that the requirement to include at least one challenge from each of the four response categories in a 10 challenge test set might be more a measure of mathematical and statistical skill used to ''game'' the system rather than a demonstration of diagnostic skill.

The New York State Department of Health Cytology PT Program provided data at the June 2006 CLIAC meeting supporting the premise that a 10 challenge test lacked the discriminatory power to differentiate between competent and incompetent examinees. The New York representative stated that a competent examinee failing a testing event is a lesser problem than an incompetent individual passing the event because of the high probability that the competent individual would pass the second test. An incompetent individual passing the testing event is a more serious problem as the individual could continue to examine patient specimens until the next testing cycle. New York used statistical examples to demonstrate how a larger sample size would increase the reliability and precision for identifying poor performers while not failing good performers. New York proposed that a more accurate assessment of proficiency would be an initial test consisting of 40 to 60 challenges followed by PT at 5 to 10 year intervals.

During discussion at the June 2006 CLIAC meeting, it was noted that a 10 slide test containing one challenge from each response category would allow an individual to make an educated guess through the process of elimination by selecting response categories that would result in the fewest lost points. Increasing the number of challenges to 20 would make it harder to ''game'' the test even with the requirement to include at least one challenge from each of the four response categories. In order to increase the discriminatory power of the testing event and decrease the opportunities for ''gaming,'' the CLIAC recommended 20 challenges for all testing events.

After considering these comments, we are proposing at § 493.945(b) that a minimum of 20 cytology challenges would be required for each testing event. In general, increasing the number of challenges in any test increases the statistical power to discriminate between truly incompetent and competent performers. We considered increasing the number of challenges to more than 20; however this would add additional costs and burden with no

established benefit. The calculation of statistical power is not straightforward for a test of this type, which is impacted by variables inherent in the population of examinees, the composition of the slide sets and the non-dichotomous scoring scheme. For these reasons, as well as the lack of actual performance data, it was not possible to calculate actual statistical power to compare the current and proposed number of challenges. However, according to Nagy and Collins (35 Acta Cytologica, 3–7, 1991), increasing the number of challenges from 10 to 20 will reduce the statistical probability that an individual who is not proficient will pass and will not substantially change the probability that a competent individual will fail. This conclusion was based on probability theory, a simple statistical binomial error model and the assumption that a competent cytologist routinely performs at 90 percent proficiency. A competent individual not passing the first test is a lesser problem, because of the high probability the individual would pass on the second test. Increasing the number of challenges can also minimize the probability of misclassifying a proficient performer as not proficient. No test is 100 percent sensitive and specific; therefore, for statistical reasons, some competent cytologists will not pass an individual test and, conversely, some who are not proficient will pass. As noted by Gifford, Green and Coleman (8 Cytopathology, 96–102, 1997) even competent performers will occasionally obtain a score of less than 90 percent and be subject to a retest.

In addition, statistical calculations can not take into account other factors such as test familiarity. Examinees become familiar with test formats and the testing process, and thus experienced examinees will have a better chance at passing than those taking the test for the first time (Nagy and Collins, 35 Acta Cytologica, 3–7, 1991). This has been demonstrated in the State programs in which pass rates have increased over time (Newton L.E., Cytopathology Proficiency Testing in New York State: the First 25 Years. 25(4) Laboratory Medicine: 230–231(1994) and Keller, B., information presented to CLIAC, June 20–21, 2006, *http://wwwn.cdc.gov/cliac/default.aspx*, Addendum H).

We are proposing to retain the requirement to include at least one cytology challenge from each of the four response categories. We are proposing to add the requirement that each testing event include two cytology challenges from the response Category ''D'' that includes HSIL or cancer. By requiring at least 2 high grade lesion or cancer challenges per test of 20 challenges, the test difficulty will be similar to that of the current test in which 1 high grade lesion or cancer challenge is required per 10 slide test. This will (1) ensure an evaluation of the ability to differentiate more severe lesions from less severe lesions; (2) evaluate major false negative calls (inability to distinguish a high grade lesion or cancer challenge from a normal challenge) on the basis of more than one challenge; and (3) promote equivalence among test sets and among PT programs (if only 1 high grade lesion or cancer challenge was required, some programs may only include 1 such challenge to make their test easier than a program that included 1 or more high grade lesion or cancer challenges). We are also maintaining the 4 hour time period for a 20 cytology challenge test, 45 day timeframe for retests, remedial action requirements for scoring less than 90 percent, mandatory rescreening, and cessation of the examination of patient specimens after a third score of less than 90 percent on the second retest (third test).

We are soliciting comments on the effects of these proposals on laboratories and individuals as follows:

- Are there logistical concerns and costs associated with administering testing events with more than 20 cytology challenges?
- If 20 cytology challenges are used, thereby requiring a 4 hour timeframe to administer the test, what would be the impact on the laboratory operation?
- Would laboratories prefer a 4 hour testing timeframe biennially, rather than the current 2 hour testing timeframe annually?
- Should there be a requirement for each test set to contain at least one cytology challenge from each of the four response categories or more than one cytology challenge from each response category?

We are also soliciting comments on the effects of these proposals on PT programs as follows:

- Are there a sufficient number of referenced cytology challenges available to assemble 20 cytology challenge test sets to test all cytology personnel nationally?
- Would increasing the number of cytology challenges increase the PT program's cost to administer the program?
- Would program costs to participants increase from a 10 slide annual test to a 20 cytology challenge biennial test?
- What statistical methods and testing research could CMS use to better determine the statistical power of a cytology proficiency test with 20 challenges and a multinomial, weighted scoring scheme?

E. Response Categories

The response categories described at § 493.945(b)(1) include: Unsatisfactory (Category A); normal or benign changes (Category B); low grade squamous intraepithelial lesions (LSIL)(Category C); and high grade squamous intraepithelial lesions (HSIL) or cancer (Category D). These response categories minimize the number of choices an individual can make during a testing event while retaining the general diagnostic categories used by most laboratories.

The CETC stated that while Bethesda 2001 terminology requires distinct interpretation of LSIL (Category C) and HSIL or cancer (Category D), the separation of these squamous abnormalities is not always an exact science and under the patient management guidelines of the American Society for Colposcopy and Cervical Pathology (ASCCP) both are referred for colposcopy. The CETC suggested only a small number of points be lost for failing to make this distinction. The ASCT suggested combining HSIL or cancer (Category D) and LSIL (Category C) to reflect the cytotechnologist practice of categorizing Pap smear diagnoses using three distinctions: Unsatisfactory, negative or normal, and ''refer to the pathologists.''

The CETC noted there were several concerns with the unsatisfactory category because studies have shown, even with obvious cases, it is difficult to achieve a consensus diagnosis with this response category. The ASCT suggested omitting the unsatisfactory category and eliminating the mandate to require at least one unsatisfactory slide in each test set. The ASCT stated that the 1992 description of unsatisfactory challenges is outdated and subjective, specifically the description of unsatisfactory challenges as those with scant cellularity, air drying, or obscuring material would not apply to liquid-based preparations; instead they suggested that the description for unsatisfactory included in the regulations should follow the less descriptive Bethesda 2001 terminology. Use of the Bethesda 2001 terminology would serve a dual purpose of not limiting programs that use different technology, for example semi-automated screening programs, and not restricting the specific criteria for unsatisfactory to the current preparation types.

To maintain the diagnostic categories used by most laboratories in reporting patient results, CLIAC recommended

retaining the four response categories. We agree with the CLIAC recommendation and are proposing to maintain the current four response categories: Unsatisfactory (Category A); Normal or Benign changes (Category B); LSIL (Category C); and HSIL or cancer (Category D).

While no change is proposed for the number of response categories, we are proposing at § 493.945, to change the description of the unsatisfactory category to reflect Bethesda 2001 terminology which states the specimen is processed and evaluated but unsatisfactory for evaluation of epithelial abnormality. All CMS approved cytology PT programs would be required to define the specific criteria used to describe the unsatisfactory response category.

We are soliciting comments on the following:

- Should criteria be defined in the regulation for ''unsatisfactory'' cytology challenges?
- If criteria for ''unsatisfactory'' are described, should the regulations include descriptions or criteria specific to each preparation type?
- Should a fifth response category be required, separating HSIL or cancer (Category D) to more closely follow Bethesda terminology? We note that Bethesda 2001 separates LSIL (Category C) from HSIL (Category D), and separates HSIL from cancer, also (Category D).
- If a fifth category of cancer is required, should an individual who has an incorrect response in this category be allowed to pass PT?

F. Cytology Challenge Referencing

The requirements currently at § 493.945(b)(1), specifies referencing each glass-slide challenge with 100 percent consensus by a minimum of three physicians certified in anatomic pathology. ASCT suggested referencing of the challenges include blind review by three cytopathologists on undotted slides; however, the organization also stressed the importance of including cytotechnologists in the review process, as this reflects the current practice of using a cytotechnologist as the initial screener and evaluator. A PT program recommended requiring each physician certified in anatomic pathology to independently review each challenge. CLIAC discussed these options but did not make a recommendation on changing the process for referencing the challenges.

CMS would encourage PT programs to use blind review or other mechanisms to ensure each cytology challenge is referenced in the correct category. In this proposed rule, we are proposing at § 493.945(c)(1)(i), to retain the requirement for 100 percent consensus by a minimum of three physicians certified in anatomic pathology. However, based on our experience, we are also proposing that each physician who references cytology challenges must examine gynecologic preparations on a routine basis.

We are soliciting comments on the following:

- Should the review of cytology challenges by three physicians certified in anatomic pathology be on undotted slides?
- Should the three physicians certified in anatomic pathology independently determine the response category for each cytology challenge?
- Should PT programs be required to include cytotechnologists in the review process for referencing cytology challenges? If so, describe a process for including cytotechnologists.

G. Biopsy Confirmation

The requirements currently at § 493.945(b)(1), specify biopsy confirmation of premalignant and malignant challenges. Consequently, PT programs need to obtain sufficient numbers of slides that meet the diagnostic criteria for these categories and have confirmatory histology. This requirement has resulted in the removal of potential PT challenges when sampling techniques fail to obtain diagnostic tissue or tissue samples are not consistent with the cytology diagnosis. It was stated at the June 2006 CLIAC meeting that while LSIL (Category C) is reproducible, there are instances of cytologic LSIL (Category C) that do not confirm by colposcopy. LSIL (Category C) lesions are often transient and may regress in the interval between the time the Pap smear is taken and the time of colposcopic biopsy. The CLIAC recommended removal of the requirement for biopsy confirmation of LSIL (Category C) challenges while retaining it for HSIL or cancer (Category D).

Based on the CLIAC recommendations and PT program comments, we are proposing to eliminate the requirement for biopsy confirmation of LSIL (Category C) cytology challenges used in PT testing. However, we are proposing at § 493(c)(1)(iii), to retain biopsy confirmation of HSIL or cancer (Category D) cytology challenges.

We are soliciting comment on the following:

- Should the requirement for biopsy confirmation of LSIL (Category C) cytology challenges for PT be retained?
- How many pathologists' diagnoses should be required for biopsy confirmation of these PT samples?

H. Validation of Cytology Challenges

As previously stated, the requirements currently at § 493.945(b)(1), include the referencing of challenges by three physicians certified in anatomic pathology and biopsy confirmation. The CETC stated that this initial validation process is inadequate and without additional validation processes, could lead to indiscriminate failure of qualified, competent personnel. The CETC recommended that a requirement for field validation of the challenges before inclusion in PT events be added, stating that slides used for PT must demonstrate they can be interpreted in a consistent manner by a significant number of practicing cytologists. The organization further stated that field validation must consist of statistical assessment of the performance of each challenge under actual testing conditions. An example would be validation of at least 20 responses for each challenge with a correct response from participants at least 90 percent of the time.

In addition, the CETC indicated that the validation must be ongoing with continuous monitoring because slides may become broken, faded, or the coverslip may become unattached during use and cease to meet validation criteria. The CETC recommended that individuals who fail a testing event based on a slide that falls below validation criteria for that testing cycle not be penalized and there should be no additional cost to the affected individual or his or her institution if retesting is necessary.

The need for field validation of challenges is supported by a CDC study ''*Comparison of Cytology PT—Glass Slides* vs. *Virtual Slides*.'' *See,* 48 *Acta Cytologica* (2004) 788–794. The performance of the participants on glass-slide and computer-based PT were compared in this study. The glass-slide PT challenges were field validated by inclusion in several testing cycles, but the computer-based challenges were only referenced by three physicians certified in anatomic pathology. Four computer-based challenges failed to obtain a 90 percent consensus during field testing. When the four challenges were excluded from the scoring, the results were similar for both types of PT. The authors concluded that each challenge must be field validated by cytotechnologists and pathologists.

The CLIAC acknowledged that all slides, particularly liquid-based

preparations, fade at a faster rate than conventional slides and may fail to meet field validation criteria over time. The CLIAC recommended adding a requirement for PT programs to field validate all challenges with continuous monitoring and removal of any challenge that fails to meet field validation criteria. The CLIAC also recommended that the validation process be disclosed to participants by the PT program. At a subsequent meeting, the PT programs suggested not including specific criteria for field validation in regulatory language, stating the criteria for validation may change as more knowledge is acquired about the process of validation and as technology changes.

To ensure consistent testing and minimize the concerns about inappropriate cytology challenges, validation criteria would be assessed by CMS during the PT program approval and reapproval processes. Although we are not proposing in this rule to include specific criteria for validation, we are proposing at § 493.945(c)(1)(ii), that programs are required to field validate and disclose the validation process to their participants.

We are soliciting comments on the following:

- Should the regulations include a requirement for field validation of each cytology challenge before inclusion in a test set?
- Should criteria for this initial field validation be stated in the regulations? If so, how should the criteria be defined?
- Should continuous monitoring of each cytology challenge be required?
- Should continuous monitoring criteria be specified in the regulations? If so what criteria should be required?
- Will the requirement for continuous field validation add any additional costs?

I. Scoring Scheme

The regulations currently at § 493.945(b)(3)(ii)(c) through (g), specify separate scoring schemes for cytotechnologists and technical supervisors (pathologists) for 10 slide and 20 slide tests. Cytotechnologists are not penalized for their inability to differentiate between LSIL (Category C) and HSIL or cancer (Category D), but technical supervisors (pathologists) lose points for incorrectly differentiating between the LSIL (Category C) and HSIL or cancer (Category D) categories.

The 1992 scoring scheme awards partial credit to cytotechnologists for reporting unsatisfactory or negative challenges as LSIL (Category C) or HSIL or cancer (Category D). A passing score is at least 90 percent as specified currently at § 493.855(b)(2) and (b)(3). The CETC attributed the difference in pass rates of the cytotechnologists and pathologists to the 1992 scoring scheme which awards partial credit to cytotechnologists, but penalizes pathologists. The CETC recommended separate schemes be retained and include only a small penalty for a pathologist not distinguishing between LSIL (Category C) and HSIL or cancer (Category D); no penalty for responding that a normal or benign challenge is unsatisfactory; a penalty for reporting an unsatisfactory as normal or benign change; and a zero score for reporting an HSIL or cancer (Category D) as normal or benign change (false negative) and a normal or benign change as HSIL or cancer (Category D)(false positive). The ASCT suggested a unified scoring scheme, stating that while pathologists are responsible and accountable for reporting results, cytotechnologists are accountable for the initial location, interpretation and marking of representative cells. The ASCT also suggested that the highly punitive point deductions for a single discrepancy (calling an HSIL or cancer (Category D) a normal or benign change (Category B)) be eliminated.

The CLIAC recommended the removal of the automatic failure for reporting one HSIL or cancer (Category D) as a Normal or Benign Change (Category B). The CLIAC discussed the need to score the test so that more points are lost for misinterpretation of HSIL or cancer (Category D) as a Normal or Benign Change (Category B), but not so many points that missing a single challenge results in a failing score (less than 90 percent). It was noted that for a 20 slide test, a (−5), penalty for misinterpreting one HSIL or cancer (Category D) as a Normal or Benign Change (Category B) would result in a total loss of ten points which is a significant penalty commensurate with the seriousness of the error but does not result in an automatic failure. CLIAC also noted that if the point loss for a single challenge resulted in failure, the programs may be discouraged from including more than one of these types of challenges.

CLIAC recommended balancing the removal of the automatic failure with removing the partial credit obtained by cytotechnologists for reporting an Unsatisfactory or Normal or Benign Change as LSIL (Category C) or HSIL or cancer (Category D). Partial credit is awarded under the 1992 scoring scheme to cytotechnologists because this reporting would result in the slide being referred to the pathologist for further review. However, if the overcall diagnosis is signed out by the pathologist, this results in over treatment of the patient which may have serious consequences (costs, stress on the patient, and can lead to unnecessary procedures that could result in patient infertility). It was also noted that a flattening of the point values, less partial credit awards and fewer points deducted for calling an HSIL or cancer (Category D) a negative would decrease the ''gaming'' aspects, especially if the number of cytology challenges are also increased to 20 as discussed previously under ''Number of Cytology Challenges.''

CLIAC referenced another area where partial credit was not warranted was reporting an LSIL (Category C) challenge as Unsatisfactory (Category A). CLIAC noted this was one of the most reproducible diagnoses and that it would be reasonable to require both cytotechnologists and pathologists to make this distinction.

In consideration of the many comments and recommendations, in this proposed rule, the scoring scheme awards fewer partial credits to discourage over reporting and reduce the gaming aspects. It also eliminates the automatic failure for misdiagnosis of a single HSIL or cancer (Category D), which would balance the loss of partial credit for over reporting a single cytology challenge.

Although the ASCT suggested that a passing score should be changed from at least 90 percent to at least 80 percent, CMS experience with testing for the 2005 and 2006 testing cycles (see tables for data on the first and second failure rates for 2005 and 2006 testing cycles) demonstrates a low rate of failure on the initial test and an even lower failure rate on subsequent retests. Therefore, we propose at § 493.853(b)(3) to retain the 90 percent or higher as the passing score.

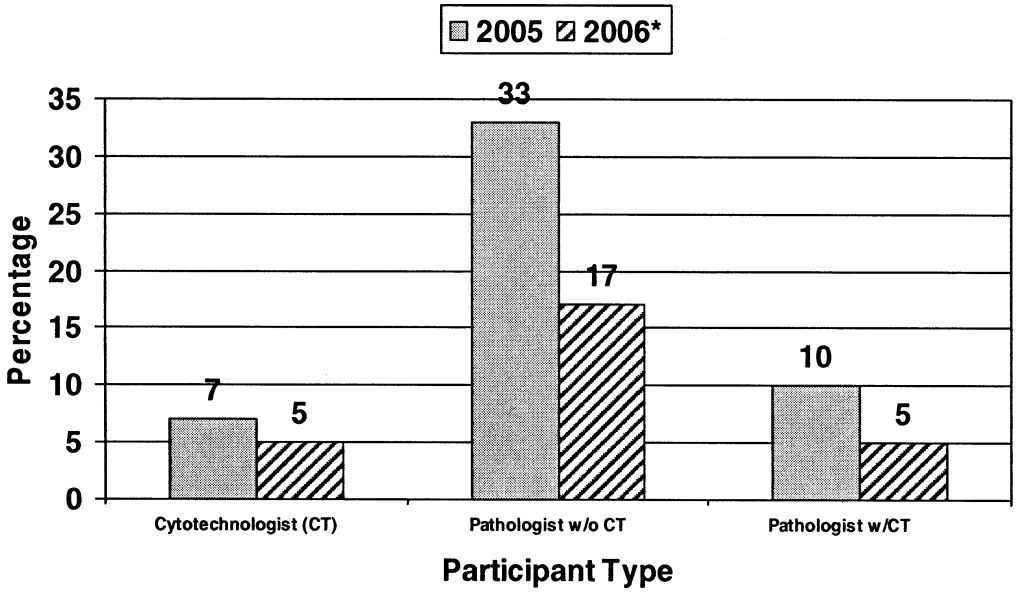

•Preliminary 2006 data (January 1- December 5, 2006)

Failure rate initial tests	2005	2006 *
Total Number Tested	12,831	12,217
Total Number of Failures	1,177	653
Cytotechnologists	447	282
Pathologists Without Cytotechnologists** ...	156	74
Pathologists With Cytotechnologists** ...	570	297

* Preliminary 2006 Data (January 1, 2006 through January 14, 2007).

Note: 2005 Data included a category of individuals (cytotechnologists and pathologists) who were not employed permanently at one laboratory during the year. Four of these individuals failed the first test but were not included in the bar graph.

** From a personnel perspective, cytology laboratories may be structured differently from one another. Currently the majority of laboratories have a pathologist who is assisted by a cytotechnologist during their daily routine. In such situations the cytotechnologist is generally responsible for locating and identifying cells that are abnormal. The pathologist would then be responsible for issuance of the final diagnosis on the slide in question. These scenarios are what is meant by "Pathologists with Cytotechnologists" in the charts located in this section. "Pathologists with Cytotechnologists" are tested in a manner similar to their daily routine. Pathologists who are assisted by cytotechnologists are given a choice to be tested with a test set that has been previously examined by a cytotechnologist who located and identified the abnormal cells or the pathologist may choose to be tested with a test set that has not been previously examined. The remainder of the pathologists work in laboratories where they are required to locate and identify abnormal cells and issue a final diagnosis without the assistance of a cytotechnologist. These scenarios are what is meant by "Pathologists without Cytotechnologists" in the charts. Pathologists who work without a cytotechnologist must be tested in the same manner as they perform their daily routine. They are therefore to be tested on a test set that has not been previously examined by a cytotechnologist.

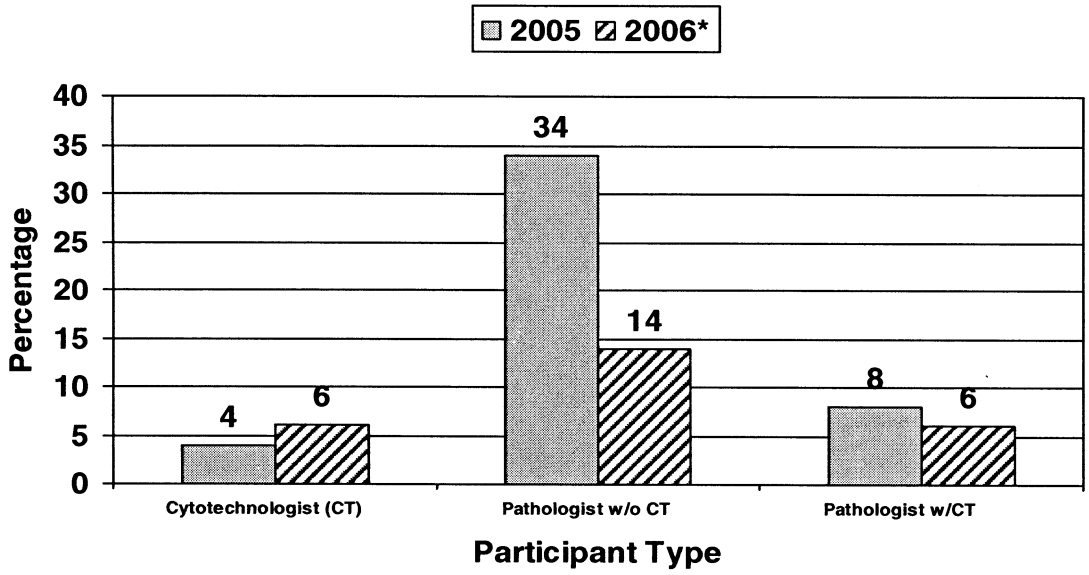

* Preliminary 2006 data (January 1, 2006- January 14, 2007)

Failure rate second test (1st retest)	2005	2006 *
Total Number Tested	1,128	509
Total Number of Failures	110	33
Cytotechnologists	17	13
Pathologists Without Cytotechnologists	45	7

Failure rate second test (1st retest)	2005	2006 *
Pathologists With Cytotechnologists	45	13

* Preliminary 2006 Data (January 1, 2006 through January 14, 2007).

Note: 2005 Data included a category of individuals (cytotechnologists and pathologists) who were not employed permanently at one laboratory during the year. Three of these individuals failed the second test but were not included in the bar graph.

We propose to change the point values for a 20 cytology challenge test for a technical supervisor qualified under § 493.1449(b) or (k) to the following:

Correct response	Technical supervisor examinee response			
	A—UNSAT	B—NEGATIVE	C—LSIL	D—HSIL
A—UNSAT	5	0	0	0
B—NEGATIVE	2.5	5	0	0
C—LSIL	0	0	5	2.5
D—HSIL	0	−5	2.5	5

We propose to change the point values for a 20 cytology challenge test for a cytotechnologist qualified under § 493.1469 or § 493.1483 to the following:

Correct response	Cytotechnologist examinee response			
	A—UNSAT	B—NEGATIVE	C—LSIL	D—HSIL
A—UNSAT	5	0	0	0
B—NEGATIVE	2.5	5	0	0
C—LSIL	0	0	5	5
D—HSIL	0	−5	5	5

Comments are solicited on the following:

- Should the automatic failure for misdiagnosing an HSIL or cancer (Category D) as a Normal or Benign Change (Category B) be retained for pathologists and cytotechnologists?
- Should pathologists and cytotechnologists be evaluated using the same scoring scheme? If not, how should the scoring grid be composed?
- Should the cytotechnologist scoring scheme be more stringent than the current regulations?
- How would the same scoring scheme meet the statutory requirement for evaluating workplace performance of both cytotechnologists and pathologists with respect to their responsibilities in reviewing cytology preparations?

CMS has requested additional information from cytology PT providers to analyze trends in PT failures over time. This information should include, at a minimum, the impact of automatic failures due to missed High-Grade Lesions (HSIL), and the impact of false positives and false negatives on scores over time. Examples of information to be collected include:

- The number of automatic failures;
- The number of automatic failures with additional false positives;
- The number of automatic failures with additional false negatives;
- The number of automatic failures with both additional false positives and false negatives;
- The number and types of false positives that led to PT failure; and
- The number and types of false negatives that led to PT failure over time.

J. Retesting and Remediation

The requirements currently at § 493.855(b) allow a series of retests and remediation when an individual fails a testing event (that is, scores less than 90 percent). The CLIAC recommended changing the regulatory language to eliminate the word ''fail'' when an individual scores less than 90 percent to convey that an individual has not failed PT until all retesting is complete.

Under the current regulations, it is at the discretion of the PT program to select the type of information concerning incorrect responses to be provided to assist laboratories and individuals in determining the area(s) for remediation. For education and remediation, the CLIAC recommended that PT programs share additional, more specific information to examinees on each challenge that was missed.

The requirements currently at § 493.855(b)(1), requires retesting of any individual who does not obtain a score of at least 90 percent on a testing event. The ASCT commented that the regulation is confusing as to the total number of testing events permitted for an individual and recommended that only two retesting events (three total attempts) be allowed. The ASCT also suggested that all retesting events be performed at the individual's laboratory, rather than at the PT program's facility.

We are proposing to replace the term ''failure'' currently at § 493.855(c) with ''scores less than 90 percent'' in proposed § 493.853(c). The requirements currently at § 493.855(b)(2) and (b)(3), that laboratories provide remedial training and education in the area of failure, are retained in this proposed rule at § 493.853(c)(2)(i) and § 493.853(c)(3)(i), respectively. We are proposing to maintain the requirements at § 493.945 applicable to each approved PT program and to the approval and reapproval processes, and CMS would continue to review the information provided by PT programs to accompany the test score. The requirements currently at § 493.855(b)(2) and (b)(3), that laboratories provide remedial training and education in the area of failure, are retained in this proposed rule at § 493.853(c)(2)(i) and § 493.853(c)(3)(i), respectively. CMS is retaining the current requirement for an initial retest to take place not more than 45 days after receipt of notification of failure. In the event remediation is required as under proposed §§ 493.853(c)(2) and 493.853(c)(3), CMS is proposing to impose a 45 day period for retests, which will commence at the completion of remedial training at § 493.853(c)(2)(iii) and § 493.(c)(3)(iii). Currently, the PT programs determine the site of retesting events with CMS approval. We are proposing to retain this requirement in this rule, but solicit comments on this subject as follows:

- Should the PT programs provide more specific information concerning incorrect responses to the laboratory and individual to improve the testing process? Please clarify what information should be provided.
- Should all testing be conducted in the laboratory or should some testing be conducted at the location of the PT program?
- How many times should an individual be permitted to take a retest? Please provide rationale to support your recommendation.

K. Appeals Process

At this time, the PT program requirements for approval do not include an appeals process. However, CMS asks PT programs to describe their appeals process when applying for CMS approval and reapproval. It was noted at the June 2006 CLIAC meeting that some individuals were not aware they could appeal their score during the 2005 testing cycle because a written description of the appeals process was not provided by the PT program to participants unless requested. The CLIAC recommended that the PT programs describe their appeals process to all participants before enrollment in the program.

We are proposing at § 493.945(b)(4), that the PT program provide a written description of the appeals process and make it available to all enrolled individuals.

We are soliciting comments on the following:

- What criteria should be included in an appeals process?
- Should PT programs be required to provide participants with a description of their appeals process?
- When should a description of the appeals process be shared with the participants?

L. Testing Site for the First Event

The provisions currently at § 493.855(a) require announced or unannounced on-site testing for the first testing event. We are retaining this statutory requirement for on-site testing. However, a few individuals have requested more choices for testing locations including but not limited to professional meetings, seminars, and trade shows. We are soliciting the public's comments on this proposal.

M. Proctors

In the February 28, 1992 final rule with comment, we were silent on the use of a proctor to administer the testing event on-site. During the ongoing discussion with CAP regarding approval of their cytology PT program, CAP asked CMS whether in-house proctors could be used to administer the test. CAP stated that it would be less costly for programs and ultimately for laboratories if PT programs were able to use in-house laboratory personnel as test proctors. MIME also requested using laboratory proctors in their initial application.

During the review process, CMS evaluated the procedures the programs would use to ensure the integrity of the testing event. Both programs were approved allowing the use of in-house laboratory personnel as test proctors. At the August 2006 meeting, the PT programs were asked if the proctor responsibilities should be the laboratory's responsibility. Recommendations were made to hold

the laboratory responsible for proper administration of the testing event.

The CLIAC recommended that the PT programs determine the proctor requirements. However, to maintain consistency among programs, all PT programs must meet the same requirements. We are proposing at § 493.945(b)(5) and (b)(6), to add the following requirements: (1) PT programs must provide training for the laboratory proctor, which includes written instructions for the laboratory to determine the number of proctors needed to administer the PT event and a contingency for a backup proctor; (2) written instruction for the laboratory director and proctor to ensure program procedures are fulfilled; (3) a proctor examination that evaluates the proctor's understanding of proper testing protocol; and (4) the laboratory director must sign a written agreement stating the laboratory is responsible for and accepts responsibility for administering the PT as defined by the program and CMS. In the event of an improperly administered test, each individual tested in the laboratory would be assigned a score of ''zero''. We are also proposing a prohibition on the use of resources capable of assisting individuals with the interpretation of testing materials during the testing event, and on duplication of testing material by any means including photography.

We invite comments on the following:

- What specific criteria should there be for selection of the proctor?
- How often should proctor training and testing be required?
- What penalties should be applied to laboratories and individuals when testing is not conducted according to requirements?

IV. Response to Comments

Because of the large number of public comments we normally receive on **Federal Register** documents, we are not able to acknowledge or respond to them individually. We will consider all comments we receive by the date and time specified in the **DATES** section of this preamble, and, when we proceed with a subsequent document, we will respond to the comments in the preamble to that document.

V. Collection of Information Requirements

Under the Paperwork Reduction Act (PRA) of 1995, we are required to provide 60-day notice in the **Federal Register** and solicit public comment before a collection of information requirement is submitted to the Office of Management and Budget (OMB) for review and approval. In order to fairly evaluate whether an information collection should be approved by OMB, section 3506(c)(2)(A) of the PRA of 1995 requires that we solicit comment on the following issues:

- The need for the information collection and its usefulness in carrying out the proper functions of our agency.
- The accuracy of our estimate of the information collection burden.
- The quality, utility, and clarity of the information to be collected.
- Recommendations to minimize the information collection burden on the affected public, including automated collection techniques.

Therefore, we are soliciting public comments on each of these issues for the information collection requirements discussed below.

Note: All of the data that follows are based on actual 2005 cytology proficiency testing data. The 2006 data are significantly lower. The Paperwork Reduction Act (PRA) at 1320.3(h)(7) (5 CFR Part 1320) states that examinations designed to test the aptitude, abilities, or knowledge of persons tested and the collection of information for identification or classification in connection with such examinations are not considered ''information'' under the PRA and is exempt from burden estimates unless the Office of Management and Budget determines otherwise. Therefore, this section below applies to laboratories and laboratory employees, but does not apply to the proficiency testing programs described in this rule.

Condition: Cytology: gynecologic specimen examinations § 493.853.

Section 493.853(a)(2) states that the laboratory must provide the Proficiency Testing (PT) program with information necessary to identify all laboratory employees at its facility who are to be tested.

The burden associated with this requirement is the time and effort put forth by the laboratory to provide the necessary information. The estimated total number of laboratory employees taking the PT once every 2 years is approximately 12,831. It will take an estimated 5 minutes per person to provide the information necessary to enroll for testing. The approximate biennial total per laboratory employee is 5 minutes. Therefore the total annual burden is 533.4. (12,831 laboratory employees × 0.08 hours = 1026.48 biennial hours or 513.24 hours annually)

Section 493.853(b)(2) requires a laboratory to notify each laboratory employee of the date, time and location of testing.

The burden associated with this requirement is the time and effort put forth by the laboratory to notify its employees. We estimate the total number of laboratories is 2,142 in which a total of approximately 12,831 laboratory employees are employed, who need to be notified once every 2 years. It will take less than one minute for the laboratory to notify its employees of the date, time and location of testing. The total burden is one minute per laboratory and the national biennial total burden is 2,142 minutes or 35.7 hours. The annual burden is 17.8 hours.

Section 493.853(b)(3)(ii) states that for an individual with an excused absence, the laboratory must contact the PT program to determine the date, time, and location of the make-up examination.

The burden associated with this requirement is the time and effort put forth by the laboratory to obtain the information. There will be approximately 260 excused absences in a 2 year testing period. It will take approximately 10 minutes to contact the PT program to gather this information. The estimated biennially total is 10 minutes per laboratory employee and the national total burden is 44.2 hours biennially. (260 excused absences × .17 hours = 44.2 hours OR 22.1 hours annually)

Section 493.853(c)(2)(i) states that when a laboratory employee fails the cytology PT test the second time, he or she must obtain documented remedial training and education in the area of failure.

The burden associated with this requirement is the time and effort put forth by the employee to complete training and obtain documentation of that training. There will be approximately 110 laboratory employees who fail the second test (performed on-site at the laboratory). It will take approximately 4 hours per laboratory employee to complete the remedial training and obtain the necessary documentation. The national total is 440 hours biennially. (110 laboratory employees × 4 hours = 440 hours biennially OR 220 hours annually)

Section 493.853(c)(2)(ii) states that if a laboratory chooses to direct a laboratory employee who failed the first and second tests to continue examining patient Pap smears, all patient Pap smears must be re-examined by a laboratory employee who has passed the PT test and the re-examination must be documented.

The burden associated with this requirement is the time and effort put for by the laboratory to document that the patient Pap smears were re-examined. There will be approximately 110 laboratory employees who,

biennially, fail the second tests. It will take an estimated 10 seconds per slide to document that patient Pap smears were re-examined. Considering an average of 75 Pap smears that would be examined per day by a laboratory employee who would re-examine patient smears, the estimated total burden biennially for each laboratory employee who is re-screening smears is, 12.5 minutes per day or .21 hours. There would be approximately 20 working days until each laboratory employee may be retested. Each laboratory employee's burden is 4.17 hours; therefore, the total national burden is 34,650 hours, biennially. (*Rescreening Time:* 75 slides per day × 20 days = 1,500 slides to be rescreened per failed laboratory employee. 1,500 slides per failed laboratory employee × 110 failed employees = 165,000 slides to be rescreened. 165,000 slides to be rescreened × .21 hours per slides = 34,650 hours OR 17,325 hours annually. *Documentation Time:* 165,000 slides to be rescreened × .003 hours = 495 hours biennially OR 247.5 hours annually.)

Section 493.853(c)(3) states that when a laboratory employee has failed the first, second, and third cytology PT test, he or she must obtain 35 hours of documented, continuing education and discontinue examining patient Pap smears until he or she passes a PT test.

The burden associated with this requirement is the time and effort put forth by the employee to obtain and document the continuing education. There will be approximately 10 laboratory employees, biennially, who fail three tests. It will take an estimated 35 hours to obtain the required continuing education per laboratory employee. The total national burden, biennially, will be approximately 350 hours. (10 laboratory employees × 35 hours = 350 hours biennially OR 175 hours annually)

Cytology: gynecologic examinations § 493.945.

While the requirements below are subject to the PRA, we believe the burden associated with these requirements is exempt from the requirements of the PRA as defined in 5 CFR 1320.3(h)(7).

Cytology: gynecologic examinations § 493.945.

Section 493.945(a) requires PT programs to notify the laboratory at least 30 days before the testing event of the location, date, and time of testing. For those individuals who score less than 90 percent on the initial testing event, a second test must be scheduled by the laboratory and the individual must take the test within 45 days after the laboratory is notified to ensure the laboratory's compliance with § 493.853(c).

Section 493.945(b)(1)(i) states that if slides are still subject to retention by the laboratory, they may be loaned to a proficiency testing program if the program provides the laboratory with documentation of the loan of the slides and ensures that slides loaned to it are retrievable upon request.

Sections 493.945(b)(4), (5), and (6) require the program to:

- Provide a written description of the appeals process that is available to all individuals enrolled in the program.
- Provide training for laboratory designated proctors that includes—

(1) Written instructions for the laboratory to determine the number of proctors needed to administer the proficiency testing event, including contingency for a backup proctor if needed;

(2) Written instructions for the laboratory director and proctor to ensure program procedures are fulfilled; and

(3) A proctor examination that evaluates the proctor's understanding of proper testing protocol.

Provide a written agreement, to be signed by the laboratory director and returned to the program before testing, stating the laboratory is responsible for and accepts responsibility for administering the proficiency testing as defined by the program and CMS.

Section 493.945(c)(1)(ii) requires the program to disclose their method of continuous field validation to participants before enrollment in the program.

We have submitted a copy of this proposed rule to OMB for its review of the information collection requirements described above. These requirements are not effective until they have been approved by OMB.

If you comment on these information collection and recordkeeping requirements, please do either of the following:

1. Submit your comments electronically as specified in the **ADDRESSES** section of this proposed rule; or

2. Mail copies to the address specified in the **ADDRESSES** section of this proposed rule and to the Office of Information and Regulatory Affairs, Office of Management and Budget, Room 10235, New Executive Office Building, Washington, DC 20503, *Attn:* CMS Desk Officer, *OIRA_submission@omb.eop.gov* or fax (202) 395–6974.

VI. Regulatory Impact Statement

A. Overall Impact

We have examined the impacts of this rule as required by Executive Order 12866 (September 1993, Regulatory Planning and Review), the Regulatory Flexibility Act (RFA) (September 19, 1980, Pub. L. 96–354), section 1102(b) of the Social Security Act, the Unfunded Mandates Reform Act of 1995 (Pub. L. 104–4), Executive Order 13132 on Federalism, and the Congressional Review Act (5 U.S.C. 804(2)).

Executive Order 12866 (as amended by Executive Order 13258, which merely reassigned responsibility of duties) directs agencies to assess all costs and benefits of available regulatory alternatives and, if regulation is necessary, to select regulatory approaches that maximize net benefits (including potential economic, environmental, public health and safety effects, distributive impacts, and equity). A regulatory impact analysis (RIA) must be prepared for major rules with economically significant effects ($100 million or more in any 1 year). We do not believe this proposed rule would constitute an economically significant rule because it has no budget implications that would impact Medicare and Medicaid benefit payments by over $100 million in any one year. However, if finalized, the proposed rule would revise the requirements for cytology proficiency testing (PT) and would affect laboratories and individuals now subject to participation in PT, and could have some budget implications. In addition, this proposed rule, if finalized, would revise the requirements for cytology PT programs, which would cause the three existing PT programs to incur some costs as they modify their CMS-approved programs to meet the requirements specified in this rule. It may also have an effect on some States regarding State PT requirements. Therefore, we have prepared a RIA although the specified threshold to require a full analysis has not been met.

The RFA requires agencies to analyze options for regulatory relief of small businesses, if a rule has a significant impact on a substantial number of small entities. For purposes of the RFA, almost all cytology laboratories are considered to be small entities. The cytology PT programs are also considered small entities due to their nonprofit status. Individuals and States are not included in the definition of a small entity. Based on our initial analysis, we expect that this proposed rule would not have a significant impact on a substantial number of small

businesses or other small entities because only two of the proposed changes to the current PT requirements are anticipated to have non-negligible impacts, and these two changes are largely offsetting (that is, the increase in number of cytology challenges per test from 10 to 20, and decreased frequency of testing from annually to every other year). For the two year test cycle, there would be no increase in the amount of time an individual would spend taking the test. And although the number of challenges per test would increase, because the frequency of testing would decrease, programs would not need to increase the inventory of challenges to provide testing. Therefore, the Secretary has determined that this proposed rule would not have a significant economic impact on a substantial number of small entities.

In addition, section 1102(b) of the Act requires us to prepare a regulatory impact analysis if a rule may have a significant impact on the operations of a substantial number of small rural hospitals. This analysis must conform to the provisions of section 603 of the RFA. For purposes of section 1102(b) of the Act, we define a small rural hospital as a hospital that is located outside of a Metropolitan Statistical Area and has fewer than 100 beds. This proposed rule would not affect small rural hospitals because only two of the proposed changes to the current PT requirements are anticipated to have non-negligible impacts, and those two changes are largely offsetting (that is, the increase in number of cytology challenges per test from 10 to 20, and decreased frequency of testing from annually to every other year). Therefore, for purposes of our obligations under section 1102(b) of the SSA, we are not providing an analysis.

Section 202 of the Unfunded Mandates Reform Act of 1995 (UMRA) also requires that agencies assess anticipated costs and benefits before issuing any rule whose mandates require spending in any 1 year of $100 million in 1995 dollars, updated annually for inflation. That threshold level is currently approximately $130 million. Based on our assessment, this rule would have no consequential effect on State, local, or tribal governments, or on the private sector. We anticipate that States will not incur substantial costs if this proposed rule is finalized because it does not contain changes that would result in significant cost differences from the regulations that are currently in place. We have determined that this proposed rule generally does not significantly affect States' rights, roles, and responsibilities. This proposed rule would impact one State cytology PT program (Maryland), which currently meets the Clinical Laboratory Improvement Amendments of 1988 (CLIA) requirements for CMS approval, and would require the State to update their program requirements to meet the new final requirements.

The objective of this regulatory impact analysis is to summarize the cost and benefits of implementing the regulations we are proposing. The conclusions and assumptions contained in this RIA are based on cytology PT data from 2005, the first year national testing took place.

Public health benefits are not anticipated from the proposed changes to the cytology PT requirements compared to those in the existing regulation in terms of reducing the number of incorrect diagnoses or other public health measures (for example, reduction in false negative or false positive cervical cancer diagnoses, reduction in cervical cancer morbidity or mortality) based on analysis of relevant available data. As no data are available to suggest otherwise, we believe that the proposed changes may produce virtually the same results as the existing regulation in terms of PT outcomes (for example, examinee proficiency, number of examinees passing each test). We believe that the proposed regulations will result in a reduced burden on the population being tested and their employers. Some of this reduced burden is quantifiable in monetary terms as cost savings associated with less frequent testing; however, other effects can not be quantified.

No distributional effects from the proposed changes are anticipated as they do not result in significant changes in treatments or outcomes for different groups. Further, the proposed changes are unlikely to increase market prices for Pap smears or other health care costs as they are not anticipated to result in any significant change in PT outcomes, or to increase the costs associated with gynecologic cytology PT.

Executive Order 13132 establishes certain requirements that an agency must meet when it promulgates a proposed rule (and subsequent final rule) that imposes substantial direct requirement costs on State and local governments, preempts State law, or otherwise has Federalism implications. This proposed rule will not have a substantial direct effect on State or local governments, preempt States, or otherwise have a Federalism implication.

B. Anticipated Effects

This proposed rule includes changes that, if finalized, would impact 2,142 cytology laboratories and 12,831 individuals (reference: *http://www.cms.hhs.gov/CLIA/downloads/2005FinalTestingResults080906MDMIME.pdf*) who screen or interpret the 65 million gynecologic cytology preparations in the U.S. each year (references: Solomon D., Breen N., and McNeal T. *Cervical cancer screening rates in the United States and the potential impact of implementation of screening guidelines:* 57(2)CA A Cancer Journal for Clinicians, 105–111(2007) and Eltoum I. A., and Roberson J.: *Impact of HPV testing, HPV vaccine development, and changing screening frequency on national Pap test* volume, 111(1) Cancer Cytopathology 34–40(2007)). These laboratories and individuals are required to participate in PT under the regulations implemented by the February 28, 1992 final rule with comment implementing the CLIA statute. This proposed rule also includes changes that would impact the three existing CMS-approved cytology PT programs.

Although we have insufficient data to calculate the actual costs and benefits that would result from these proposed changes, we are providing an analysis of the potential impact based on available information and certain assumptions. We expect these proposed requirements to result in a negligible increase in burden or cost to the PT programs and a decreased burden for laboratories and individuals, with little or no change in the cost for laboratory or individual participation in cytology PT. We do not anticipate there would be any effect on the Medicare and Medicaid programs.

This proposed rule includes requirements for laboratories, individuals who conduct cytology testing, and cytology PT programs that would revise those specified in the February 28, 1992 final rule with comment. Implementation of these proposed requirements in a final rule would result in changes that are anticipated to have quantifiable and non-quantifiable impacts.

The following proposed regulatory changes, if finalized, will result in quantifiable impact:

- Decrease the testing frequency from once per calendar year to once every two calendar years.
- Increase the number of cytology challenges per testing event for the first two testing events from 10 to 20 and require no more than 4 hours rather than the current 2 hours for completion of the test.

The following changes are anticipated to have minor impact on regulated parties, but data are insufficient to quantitatively evaluate their effects:

- Expand test medium options to allow other potential media such as computer-based virtual slides or alternative testing formats, in addition to glass slide cytology challenges.
- Revise the scoring scheme for technical supervisors (pathologists) and cytotechnologists to eliminate the partial credit for reporting response Category C (LSIL) as response Category A (Unsatisfactory) and reduce the penalty score for reporting response Category D (HSIL or cancer) as response Category B (Normal or Benign Changes). In addition, for cytotechnologists, remove the partial credit for over reporting response Category A (Unsatisfactory) and response Category B (Normal or Benign Changes) cytology challenges as either response Category C (LSIL) or response Category D (HSIL or cancer).
- Eliminate the requirement for tissue biopsy confirmation of response Category C (LSIL) cytology challenges.
- Make the laboratory director responsible for ensuring proper test administration (meeting CMS requirements) when PT is held on-site in the laboratory and reporting identifying information for all individuals to CMS and PT programs.
- Allow appropriately trained proctors to administer the testing event on-site in the laboratory.
- Revise the description of the response Category A (Unsatisfactory) to reflect the current Bethesda 2001 Terminology criteria for ''unsatisfactory for diagnosis'' as approved by CMS.
- Increase the required number of response Category D (HSIL or cancer) cytology challenges to at least two in a 20 cytology challenge test, which is equivalent to the current requirements for one per 10 challenge test.
- Require continuous field validation of cytology challenges throughout their use in testing.
- Require the PT program to inform participants of the appeals process in writing.

The potential impact of each of these proposed changes is discussed below.

1. Quantifiable Impact

Decrease the testing frequency from once per calendar year to once every two calendar years and increase the number of cytology challenges per testing event for the first two tests from 10 to 20, requiring no more than 4 hours rather than the current 2 hours for completion of the test.

a. Rationale

The 10 slide test required once per calendar year in the current rule was implemented to limit the number of slides that would have to be accumulated and referenced to provide national testing to all individuals who examine gynecologic cytology preparations. The increase in the number of cytology challenges from 10 to 20 is proposed in conjunction with the increase in time between testing events from 1 to 2 year cycles. These changes are linked and are considered here together.

The rationale for increasing the number of test challenges from 10 to 20 is to improve the test sensitivity. Generally, increasing the challenges from 10 to 20 for the initial test and first retest in this proposed rule was based on the desire to increase statistical validity, while also attempting to minimize the overall costs expended to provide and take a test with a larger number of challenges.

With regards to the temporal spacing of tests, the skills required in locating and identifying cytologic abnormalities are not quickly lost. These skills are based on knowledge and memory, or ''semantic'' knowledge accumulated by training and experience and this knowledge is durable (Nagy G.K. and Newton L.E., *Cytopathology proficiency testing: Where do we go from here*? 34(4)Diagnostic Cytopathology 257–264 (2006)). Therefore, it is not expected that cytotechnologists and pathologists, who routinely examine gynecologic cytology specimens, would lose these skills and knowledge over a period of 1 year or 2 years.

b. Potential Impact

Increasing the number of cytology challenges to 20 for each test is proposed in conjunction with decreasing the testing frequency from annual testing to ''at least once every 2 calendar years.'' These changes would have the following effects on laboratories:

- Decrease the burden by decreasing the frequency for which laboratories would have to prepare for testing (for example, the time needed to schedule testing, provide for proctor training, proctor preparation for the testing event, and arranging for make-up testing for individuals who miss the testing event or retesting for individuals scoring less than 90 percent).
- Increase the length of time for taking the first two tests from 2 hours to 4 hours corresponding to the increase in number of cytology challenges from 10 to 20.

c. Estimated Costs

The baseline for measuring costs and benefits of the proposed change is found in the existing regulation that is equivalent to no change. The primary cost impacts of the proposed change compared to the baseline are attributable to time-related changes: (1) A reduction in the frequency of testing from annually to every other year; and (2) an increase in the time needed to take each of the first two tests by increasing the number of cytology challenges from 10 to 20. To reflect the impact of these time-related changes and permit meaningful comparison, annual testing costs are estimated for a common base population of examinees. The costs of the proposed changes (testing every other year with 20 cytology challenge tests for all tests) are estimated using one-half of the base population, and the costs of the existing regulation (annual testing with 10 challenge tests for the first and second tests; 20 cytology challenge tests for the third and fourth tests) are estimated using the entire base population. Annual testing costs are expressed in constant 2005 dollars.

A lack of detailed information about testing costs and related resource use precludes the use of scientifically defensible probability distributions for cost estimates. The assumptions used and described constitute plausible alternatives, which provide a reasonable basis for calculation of costs. These assumptions are stated explicitly, and most include a range of estimates represented by a high and low value, such that all values with lower cost implications are reflected in the total low estimates and those with higher cost implications are reflected in the total high estimates. The assumptions stated below are used to estimate the annual testing costs under the existing regulation and for the proposed changes in testing frequency and number of cytology challenges.

The primary costs associated with cytology PT under the existing regulation and the proposed changes are the value of lost examinee and proctor work time associated with testing requirements. The assumptions used to estimate the time requirements are detailed below. Other costs associated with operating cytology PT programs are not quantified due to the limited information concerning these costs, and that the most substantial ones can be characterized as sunk (fixed) costs required for initial start-up of a program. Initial and ongoing slide acquisition costs are assumed to be negligible as they are currently donated. Ongoing

costs for sustaining program operations are primarily fixed costs including overhead, administration, challenge referencing, challenge validation, maintenance and storage costs. The requirement for continuous field validation as proposed in this rule would be new; however, the existing CMS-approved PT programs have already implemented validation processes. We assume that these costs would continue at more or less the same level as long as there is a regulation requiring cytology PT using the current technology, so the anticipated cost impact for the proposed changes is assumed to be negligible over time. If a program incorporates new technology, we would anticipate an initial increase for start-up costs which may be offset by decreased operating costs over time for the program, but actual costs for such a program are unknown at this time. We are soliciting input from the public on this subject.

d. Examinee Population

The base population used for this impact analysis consists of a total of 12,831 individuals taking the first test with the following breakdown; 6,530 (50.9 percent) cytotechnologists, 5,833 (45.5 percent) pathologists with cytotechnologists, and 468 (3.6 percent) pathologists without cytotechnologists based on CMS' Final 2005 National Cytology Proficiency Testing Results. (Table 1, Source: *http://www.–cms.–hhs.–gov/–CLIA/–downloads/–2005–Final–Testing Results–080906MDMIME.pdf*, accessed 4/13/2007). The same base population is assumed to take the first test annually under the existing regulation. For the proposed change to testing every other year, it is assumed that one-half of this base population of examinees will test each year. This assumption is consistent with information received from the current PT program regarding how they would implement the proposed change. For annual testing under the existing regulation, the number of examinees for the second, third, and fourth tests corresponds to the 2005 base population used for the first test, and is based on this population's test results from the same source as follows in the table below. Similarly, for the proposed change to testing every other year, it is assumed that one-half of these examinees will test each year.

TABLE 1—BASE POPULATION NUMBER OF EXAMINEES BY TEST

	First	Second	Third	Fourth
Cytotechnologists	6,530	435	13	0
Pathologists with Cytotechnologists	5,833	561	31	3
Pathologists only	468	132	16	1
Total	12,831	1,128	60	4

Source: CMS' Final 2005 National Cytology Proficiency Testing Results.

e. Hourly Salary and Total Compensation

Cytotechnologist hourly compensation is assumed to range from $36.64 to $42.76 in 2005 dollars. This range of estimates is based on the 2005 hourly median wage rates of $26.17 reported for cytotechnologist staff for the low estimate and of $30.54 for cytotechnologist supervisor for the high estimate by the ASCP 2005 Wage and Vacancy Survey, which were then multiplied by 1.4 to estimate total hourly compensation including benefits. These wage rates are similar to those reported by the U.S. Department of Labor, Bureau of Labor Statistics, Occupational Employment Statistics, May 2005 national wage estimates for Medical and Clinical Laboratory Technologists (29–2011) at the 75th and 90th percentiles, $26.94 and $31.98, respectively. (Steward, CA and NM Thompson, ASCP 2005 Wage and Vacancy Survey. Lab Medicine 37(8): 465–469, 2006)

Pathologist hourly compensation is assumed to range from $58.98 to $117.77 in 2005 dollars. This range of estimates is based on the 2005 mean hourly wage rates of $42.13 reported for Health Diagnosing and Treating Practitioners, All Other (29–1199) for the low estimate, and of $84.12 reported for Physicians and Surgeons, All Other (29–1069), Medical and diagnostic laboratories for the high estimate by the U.S. Department of Labor, Bureau of Labor Statistics, Occupational Employment Statistics, May 2005, which were then multiplied by 1.4 to estimate total hourly compensation including benefits.

TABLE 2—HOURLY SALARY AND TOTAL COMPENSATION COST ASSUMPTIONS

[2005 dollars]

	Salary		Total compensation	
	Low	High	Low	High
Cytotechnologist	$26.17	$30.54	$36.64	$42.76
Pathologist	42.13	84.12	58.98	117.77

f. Examinee Time and Travel

1. First and second tests.

Under both the existing regulation and the proposed changes, it is assumed for simplicity sake that 100 percent of testing is on-site, requiring only examinee time for taking the test.

10 challenge test: Examinee time for taking the test under the current regulation requiring annual testing with a 10 challenge test for the first and second tests for cytotechnologists and pathologists without cytotechnologists is assumed to range between a low of 1 hour and a high of 2 hours, the maximum allowed time. For pathologists with cytotechnologists, the time for taking the 10 challenge test for the first and second tests ranges from 30 minutes to 2 hours, the maximum allowed time. (Gagnon M.B., Inhorn S., and Hancock J. *et al. Comparison of Cytology Proficiency Testing—Glass Slides* vs. *Virtual Slides* 48(6)Acta Cytologica: 788–794(2004))

20 challenge tests: For cytotechnologists and pathologists without cytotechnologists, examinee time is assumed to range between a low of 2 hours and a high of 4 hours, the maximum allowed time. For pathologists with cytotechnologists it is assumed to range between a low of 1 hour and a high of 4 hours, the maximum allowed time.

2. Third and fourth test.

Travel and test time: Under both the existing regulation and the proposed changes, it is assumed for simplicity sake that 100 percent of testing is off-site, requiring examinees to travel. (The third test may be on-site; however, a cytology PT program proctor is required, so in either case, at least one person must travel and incur travel-related costs.) Examinee travel time under the existing regulation and the proposed changes is assumed to require 2 lost work days of 8 hours each. This would be the total combined amount of examinee time lost due to taking the test and traveling. (Under both the existing regulation and the proposed changes, third and fourth tests are 20 cytology challenge tests.)

Individuals taking the third and fourth tests are assumed to incur travel expenses for off-site testing. Travel-related expenses per examinee for each test are assumed as follows: $350 for transportation-related costs (airfare and ground transportation) plus 2 days at the maximum federal per diem expense for unspecified locations (includes one day of lodging) of $150, totaling $500 in 2005 dollars.

The estimated total annual examinee time and travel costs provided in Table 3 are for a national base population using the number of examinees in 2005 (12,831) as broken down in Table 1 for the existing regulation, and one-half the number of examinees for the proposed change. For the first and second tests, the applicable number of examinees is multiplied by test time as detailed in this section for the 10- and 20-challenge tests, respectively, and the corresponding hourly compensation assumptions for cytotechnologists and pathologists in Table 2. For the third and fourth tests, the applicable number of examinees is multiplied by travel expenses ($500) and 16 hours (2 days) for test and travel time as described in this section, with the latter also multiplied by the corresponding hourly compensation assumptions in Table 2. It is assumed that these total national estimates apply to all laboratories, and that only laboratories directly bear the examinee time and travel costs by compensating examinees (their employees) for their test and travel time, and paying either their employee's or the program-supplied proctor's travel expenses. We note that neither examinees nor the PT programs are assumed to bear these costs.

TABLE 3—ESTIMATED TOTAL ANNUAL EXAMINEE TIME AND TRAVEL COSTS OF CYTOLOGY PROFICIENCY TESTING

[2005 dollars]

Estimated total annual examinee time and travel costs of cytology proficiency testing (2005 dollars)				
	Existing regulation annual testing/10 challenge first and second tests; 20 challenge third and fourth tests		Proposed change testing every other year/all 20 cytology challenge tests	
	Low	High	Low	High
First Test	$438,877	$2,042,583	$438,907	$2,042,819
Second Test	40,268	200,430	40,334	200,751
Third Test	81,974	127,457	40,808	63,128
Fourth Test	5,775	9,537	2,887	4,769
Total	566,893	2,380,008	522,936	2,311,467

Note: The differences are due to rounding the numbers of examinees and dollar amounts to whole numbers.

g. Lost Work Days

Under both the existing regulation and the proposed changes, individuals who do not pass the second test are required to have all their slides rescreened until they pass the subsequent test, and those who do not pass the third test are to cease examining gynecologic cytology specimens. It is assumed that 20 work days are lost by individuals taking the third test between the second and third tests, and that an additional 20 work days are lost by individuals taking the fourth test between the third and fourth tests due to these requirements. For those taking the fourth test, an additional 5 work days are lost due to training requirements in the existing regulation for examinees scoring less than 90 percent on the third test. Insufficient information is available to estimate training costs. However, under the current regulations, individuals failing the third or fourth test or both are experiencing these lost work days.

The estimated total annual cost of lost work days as described in this section is provided in Table 4. These are national total estimates for all third and fourth test examinees for the existing regulation (see Table 1 for breakdown of the 2005 examinees used as the base population), and one-half the number of examinees for the proposed change. As described in this section, estimated lost work days associated with rescreening are 20 8-hour days (160 hours) for each third and fourth test examinee. The hours per examinee are multiplied by the applicable number of national examinees and the corresponding hourly compensation assumptions for cytotechnologists and pathologists in Table 2. It is assumed that these total national estimates apply to all laboratories, and that only laboratories directly bear the cost of lost work days by compensating examinees (their employees) for these days. We note that neither examinees nor the PT programs are assumed to bear these costs.

TABLE 4—ESTIMATED TOTAL ANNUAL COSTS OF LOST WORK DAYS FOR CYTOLOGY PROFICIENCY TESTING

[2005 dollars]

Estimated total annual costs of lost work days for cytology proficiency testing (2005 dollars)	Existing regulation annual testing/10 challenge first and second tests; 20 challenge third and fourth tests		Proposed change testing every other year/all 20 cytology challenge tests	
	Low	High	Low	High
Third Test	$519,741	$974,571	$258,083	$481,285
Fourth Test	37,747	75,373	18,874	37,686
Total	557,488	1,049,944	276,957	518,971

h. Proctor Time

Proctors are used for each testing event, with the amount of proctor time required including pre-test, test, and post-test time. Proctors are assumed to be cytotechnologists. Since cytotechnologists serving as proctors are not available for other work, this lost time is a cost. The following assumptions are used to estimate proctor time per examinee. Combined pre-test and post-test proctor time per test-taker is assumed to range from a low of 30 minutes to a high of 1 hour under both the existing regulation and the proposed rule. Proctor test time per examinee is directly related to the number of examinees per proctor. The range for this ratio is assumed to vary from one to five examinees per proctor. (ASCP GYN PT 2007 Enrollment Booklet (accessed May 2007) *http://ascp.–org/proficiencyTesting/pdf/2007enrollment_PT.pdf* and 2007 CAP PAP PT Program General Information Booklet (accessed January 2008) *http://www.cap.org/apps/docs/proficiency_testing/pap_pt/2008_pap_pt_program_information.pdf).*

i. 10 Challenge Test

Applying the one to five range of examinees to a single proctor to the examinee time assumptions for the 10 challenge test of 1 to 2 hours for cytotechnologists and pathologists without cytotechnologists, the proctor test time per examinee ranges from 12 minutes to 2 hours, and for pathologists with cytotechnologists (examinee time of 30 minutes to 2 hours), the proctor test time per examinee ranges from 6 minutes to 2 hours. Adding the proctor time per examinee combined pre-test and post-test assumptions (30 minutes to 1 hour) to the proctor time per examinee test time estimates results in a total proctor time per examinee range of 42 minutes to 3 hours for cytotechnologists and pathologists, and a range of 36 minutes to 3 hours for pathologists with cytotechnologists.

j. 20 Challenge Test

Applying the one to five range of examinees to a single proctor to the examinee time assumptions for the 20 challenge test of 2 to 4 hours for cytotechnologists and pathologists without cytotechnologists, the proctor test time per examinee ranges from 24 minutes to 4 hours, and for pathologists with cytotechnologists (examinee time range 1 hour to 4 hours), the proctor test time per examinee ranges from 12 minutes to 4 hours. Adding the proctor time per examinee combined pre-test and post-test assumptions (30 minutes to 1 hour) to the proctor time per examinee test time estimates results in a total proctor time per examinee range of 54 minutes to 5 hours for cytotechnologists and pathologists, and a range of 42 minutes to 5 hours for pathologists with cytotechnologists.

The estimated total annual proctor time costs as described in this section are provided in Table 5. These are national total estimates for all examinees for the existing regulation (*see* Table 1 for base population) and one-half the number of examinees for the proposed change. Using the ranges stated in this section for the combined proctor pre- and post-test time, and the test time per examinee for the 10- and 20-challenge tests, respectively, these ranges are multiplied by the number of total examinees and the proctor (cytotechnologist) hourly total compensation assumptions (Table 2) to estimate the high and low total national annual proctor costs. It is assumed that these total national estimates for the first tests apply to all laboratories, and that only laboratories directly bear the proctor time costs by compensating proctors (their employees) for this time. It is assumed that the total national estimates for proctor time costs for the second, third, and fourth tests apply to all laboratories with examinees who are required to participate in repeat testing. For the second test, the laboratories would directly bear the proctor time costs as described above. For the third and fourth tests, the PT programs would directly bear these proctor time costs by compensating proctors (their employees). Hence, examinees are not assumed to bear these proctor time costs; PT programs do not bear proctor time costs of the first and second tests; and laboratories do not bear proctor time costs of the third and fourth tests.

TABLE 5—ESTIMATED TOTAL ANNUAL PROCTOR TIME COSTS FOR CYTOLOGY PROFICIENCY TESTING

[2005 dollars]

Estimated total annual proctor time costs for cytology proficiency testing (2005 dollars)	Existing regulation annual testing/10 challenge first and second tests; 20 challenge third and fourth tests		Proposed change testing every other year/all 20 cytology challenge tests	
	Low	High	Low	High
First Test	$307,717	$1,645,961	$190,198	$1,371,741
Second Test	26,875	144,700	16,572	120,797
Third Test	1,979	12,828	989	6,414
Fourth Test	132	855	66	428
Total	336,703	1,804,344	207,826	1,499,379

k. Packaging and Shipping Costs

For each test under both the existing regulation and the proposed changes, packaging and shipping costs for each slide set are assumed to range from a low of $5 to a high of $20 for the first test, and from a low of $15 to a high of $30 for the second test (PT program meeting, August 2006). No packaging and shipping costs are used for the third and fourth tests because of the assumption that off-site testing will occur at PT program locations.

The estimated total annual shipping and packaging costs as described in this section are provided in Table 6. These are national total estimates apply to all examinees for the existing regulation (see Table 1 for base population), and one-half the number of examinees for the proposed change. It is assumed that PT programs directly bear the costs for shipping and packaging. We note that neither laboratories nor examinees are assumed to bear these costs.

TABLE 6—ESTIMATED TOTAL ANNUAL SHIPPING AND PACKAGING COSTS OF CYTOLOGY PROFICIENCY TESTING

[2005 dollars]

Estimated total annual shipping and packaging costs of cytology proficiency testing (2005 dollars)	Existing regulation annual testing/10 challenge first and second tests		Proposed change testing every other year/ all 20 cytology challenge tests	
	Low	High	Low	High
First Test	$64,155	$256,620	$32,080	$128,320
Second Test	16,920	33,840	8,475	16,950
Total	81,075	290,460	40,555	145,270

Using the assumptions stated above, the estimated total annual testing costs in 2005 dollars are provided in Table 7 below.

TABLE 7—ESTIMATED TOTAL ANNUAL COSTS OF CYTOLOGY PROFICIENCY TESTING

[2005 dollars]

Estimated total annual costs of cytology proficiency testing (2005 dollars)	Existing regulation annual testing/10 challenge first and second tests; 20 challenge third and fourth tests		Proposed change testing every other year/all 20 cytology challenge tests	
	Low	High	Low	High
First Test	$810,749	$3,945,164	$661,185	$3,542,879
Second Test	84,063	378,970	65,381	338,498
Third Test	603,693	1,114,856	299,881	550,827
Fourth Test	43,654	85,765	21,827	42,883
Total	1,542,160	5,524,756	1,048,274	4,475,088

The national total annualized impact for all examinees in all laboratories of the monetized costs for the proposed changes compared to the existing regulation based on the estimates in Table 7 is a cost savings. The range of estimated savings is projected by taking the difference in the Table 7 total low and high estimates, respectively, between the existing regulation and the proposed changes. The estimated annual impact of the proposed changes ranges from a minimum savings of $493,886 (the difference in the low estimates) to a maximum savings of $1,049,668 (the difference in the high estimates) in 2005 dollars. Of the total estimated cost savings, the savings to PT programs ranges from a minimum of $41,575 to a maximum of $152,032, with the remainder of the estimated total savings to laboratories, and no estimated impact on examinees.

l. Non-Quantifiable Impacts

Expand test medium options to allow other potential media for example, computer-based virtual slides or alternative testing formats, in addition to glass slide challenges.

Rationale

Implementation of cytology PT on a national level was significantly delayed following the 1994 effective date required by the February 28, 1992 final rule with comment because no PT program requested CMS approval. The Maryland Cytology Proficiency Testing Program (MCPTP) was approved to initiate testing in 1995, but PT under that program is limited to those cytologists who examine cytology preparations from Maryland residents. In 2004, the Midwest Institute for Medical Education (MIME), the first national cytology PT program, was approved. Delay in implementation was largely due to the perception that providing a sufficient quantity of good quality glass slide preparations, as required at § 493.945(a), for use in testing would be burdensome to collect, reference, validate and maintain. The life cycle of glass slide preparations is somewhat limited due to stain fading, slide breakage, or loss. For some methods of liquid-based preparations, slides are typically usable for no more than 2 years, inclusive of time spent collecting, referencing, and validating. One way to expand the life cycle of a glass slide would be to capture a digital image of the slide preparations as a ''virtual slide,'' usable indefinitely, and thus requiring fewer slides for PT. Other computer-based test media may become available as technology advances. Therefore, in defining a cytology challenge, for PT purposes, we are proposing to permit the use of computer-based virtual slides or other CMS-approved media, in addition to traditional glass slides, expanding the options for PT programs. We anticipate that by providing flexibility for alternatives to glass slides this change could encourage the development and use of other media and testing formats.

Potential Impact

As technology for gynecologic cytology testing continues to evolve, we anticipate that the cost of PT programs that use virtual slides or other imaging technology would be less than glass slide programs, in spite of the initial implementation costs for equipment to produce virtual slides or other types of images or materials. Developmental costs for alternative formats may be offset by the decreased number of slides or other testing materials that would be needed, their validation and maintenance costs, and the costs associated with test delivery. However, data for estimating these costs are unavailable. A potential benefit of computer-based PT is that the test challenges are stable and uniform throughout testing events and to individuals being tested.

m. Eliminate the Requirement for Tissue Biopsy Confirmation of Response Category C (LSIL) Cytology Challenges

Rationale

Current requirements at § 493.945(b)(1) specify biopsy confirmation of premalignant and malignant challenges, which would include challenges in LSIL (Category C) response and Category D (HSIL or cancer). This requires PT programs to obtain sufficient numbers of slides if they meet the diagnostic criteria for these response categories and have confirmatory histologic specimen reports. Although patients with LSIL (Category C) and HSIL or cancer (Category D) are both referred for colposcopy, LSIL (Category C) lesions may be transient and regress in the interval between the time the Pap smear specimen is taken and the time of colposcopic biopsy. There are instances of LSIL (Category C) lesions that may not be confirmed by tissue biopsy. Continuing to require biopsy confirmation for LSIL (Category C) challenges would make it more difficult for PT programs to continue to find sufficient numbers of LSIL (Category C) challenges. In addition, it is proposed that all cytology challenges be field validated. This validation would confirm and strengthen the reproducible nature of LSIL (Category C) cytology challenges, and serve the same purpose as biopsy confirmation.

Potential Impact

Removal of this requirement should make it easier for PT programs to obtain cytology challenges in the response Category C (LSIL) and result in a cost savings. These savings are not quantifiable since challenges are currently donated and the cost for each laboratory to provide assurances that biopsy confirmation has been done has not been captured. These costs would vary by laboratory on the basis of the ease of use of its record-tracking system and the number of LSIL (Category C) cytology challenges it donates to a PT program.

n. Modifications to the Scoring Scheme

Rationale

The proposed scoring scheme maintains the same four response categories as in the current rule with changes to the scores for certain responses. These changes include two specific score changes in the technical supervisor (pathologist) scheme and six changes for cytotechnologist scoring that can be grouped in three categories, as described below. The only difference between the two proposed schemes is that technical supervisors receive partial credit (2.5 points) for misclassifying response Category C (LSIL) as response Category D (HSIL or cancer) and response Category D (HSIL or cancer) as response Category C (LSIL) while cytotechnologists receive full credit (5 points).

o. Scoring Changes for False Positives (Over Reporting)

Eliminating partial credit to the cytotechnologist when over reporting response Categories A (Unsatisfactory) and response Category B (Normal or Benign Changes) as response Category C (LSIL) or response Category D (HSIL or cancer) lessens the asymmetry in the scheme whereby false positives are currently given less punitive weight than false negatives. Although this change will effectively change the point values in the four boxes in the upper right hand quadrant of the scoring scheme table, it is addressed here as one change. It is expected that cytotechnologists would be able to differentiate these categories in their normal daily practice, and by awarding partial credit for making errors on the test, cytotechnologists might be prone to report results toward the positive side when they would not normally do so in practice. The current scheme, therefore, provides more opportunities for

cytotechnologists to manipulate the test system by over reporting to obtain a favorable score. The proposed scheme will more closely correspond to routine practice in which cytotechnologists report unsatisfactory and negative results.

p. Removal of Partial Credit for Miscalling LSIL as Unsatisfactory

A second proposed change for both scoring schemes (technical supervisors and cytotechnologists) is the removal of partial credit for reporting response Category A (Unsatisfactory) for a response Category C (LSIL) cytology challenge. The rationale for this change is that an LSIL (Category C) cytology challenge is easily differentiated from an unsatisfactory cytology challenge and individuals should, therefore, be able to make this determination. In addition, as described above for making false positive calls, allowing partial credit for reporting an LSIL (Category C) challenge as an unsatisfactory challenge provides an incentive for examinees to report unsatisfactory slides when in doubt. A slide miscalled as unsatisfactory in practice leads to unnecessary repeat testing.

q. Reduced Penalty for False Negatives (Under Reporting)

The proposed change to reduce the penalty score for reporting response Category B (Normal or Benign Changes) for a response Category D (HSIL or cancer) is made on the basis of a number of comments from professional organizations and recommendations from the CLIAC that suggest the current scheme is overly punitive. If finalized, this change will affect the sequence of events for retesting and remediation for individuals found to have questionable proficiency in this area. In the current rule, on a 10 slide test, one misclassification of a response Category D (HSIL or cancer) challenge as response Category B (Normal or Benign Changes) will result in a score of less than 90 percent and a 10 slide retest within 45 days. If the individual passes the retest there are no additional consequences.

If the same misdiagnosis is made on the second 10 slide retest, remediation, rescreening and a 20 slide retest will follow. In the proposed scheme, on a test with 20 cytology challenges that must include at least two cytology challenges in response Category D (HSIL or cancer), if an individual miscalls one of the HSIL or cancer (Category D) cytology challenges as normal or benign changes and makes no other errors, he or she will pass the test. With two misses of HSIL or cancer (Category D) on the proposed 20 cytology challenge test, the individual will score less than 90 percent and will be subject to a 20 cytology challenge retest. In summary, the current rule allows for two opportunities to miss an HSIL or cancer (Category D) on a total of 20 slides (given as 10 slide tests in two testing events) before rescreening is initiated. In the proposed rule, two misses of HSIL or cancer (Category D) on 20 slides (in one testing event) results in a retest. (Missing one HSIL or cancer (Category D) cytology challenge results in a passing score). Rescreening of patient specimens would be initiated in the proposed scheme if an individual missed four HSIL or cancer (Category D) cytology challenges on a total of 40 cytology challenges in two PT events, assuming no other errors were made. A comparison between the current and proposed rule for this one type of false negative error is depicted in Table 3 below.

TABLE 8—COMPARISON OF CURRENT AND PROPOSED RULE TESTING SEQUENCES

Current rule		Proposed rule	
1st test: 10 challenges	one miss* = 85 percent (one miss on 10 challenges).	1st test: 20 cytology challenges	one miss* = 90 percent—pass. two missed* = 80 percent (two misses on 20 cytology challenges).
45 days—retest			
2nd test: 10 challenges	one miss* = 85 percent (equivalent to 2 misses* on 20 challenges).	2nd test: 20 cytology challenges	one miss* = 90 percent. two missed* = 80 percent (4 misses* on 40 cytology challenges).
Remedial training on identification of HSIL OR Cancer All slides rescreened Retest			
3rd test: 20 challenges	one miss* = 80 percent	3rd test: 20 cytology challenges	two missed* = 80 percent.
Cease slide examination 35 hours of remedial training Pass 20 cytology challenge test			

Note to Reader: * miss = Reporting response Category B (normal or benign changes) for response Category D (HSIL or cancer).

Potential Impact:

Overall pass rates:

The proposed scoring scheme incorporating all of the changes described above, designed to be applied to a 20 cytology challenge test, cannot be directly compared to the current scheme with 10 challenges due to the differences in point values. The proposed scheme is more stringent in some areas (cytotechnologists scoring) and less stringent in others (pathologists scoring). We are uncertain whether these changes, coupled with the increase in the number of cytology challenges, would have any impact on the overall pass rates. The increase in cytology challenges should increase test sensitivity, while the scoring scheme changes may make the test more difficult to ''second guess'' but more easily passed for those pathologists unable to correctly identify HSIL or cancer (Category D). For the purposes of calculating costs attributed to retesting and remediation for the proposed rule, we have assumed the pass rates would not change.

r. Administrative Changes for Which Impact Would Be Negligible

In the process of approving and operating gynecologic cytology PT programs, certain administrative practices have been developed and are followed by PT programs, and laboratories as part of the program operations. CLIAC, PT programs, and professional organizations recommended incorporating these practices into the regulation to ensure that they are consistently met by all PT programs and laboratories. However, since these practices are generally part of the process at this time, we anticipate no measurable impact if they are adopted as requirements.

Written agreements: As specified at § 493.945(b)(6), the PT program must provide a written agreement to be signed by the laboratory director accepting responsibility for test administration should be of minimal impact to the PT programs and the laboratory director, since under § 493.853(b), the laboratory director must now ensure that individuals participate in on-site PT. In addition, requiring the laboratory to identify all individuals who perform gynecologic cytology examinations to CMS and PT programs, as proposed at § 493.853(a)(2), would have a minimal impact on laboratories, since this information is already provided when the laboratory enrolls in a PT program. It is not possible to calculate the minor impact of these changes to the requirements.

Proctor Training: As proposed at § 493.853(b)(4) and § 493.945(b)(5), the proctor training and examination requirements, as well as the proctor responsibility for test administration would have a negligible impact as PT programs may use laboratory-designated proctors to conduct testing, and the proctors must be trained, capable of test administration, and tested to assure competency. The resultant score of ''zero'' for all individuals in the laboratory if the proctor does not appropriately administer the testing event could impact laboratories, and lead to required remediation and limitation of slide examinations, if individuals are not retested or do not pass a subsequent examination. However, it is not possible to project whether this potential change would increase cost, but it is not expected to be significant since adequate proctor training and appropriate test administration are now part of PT program operations.

Bethesda 2001 Terminology: We propose changing the description of the response Category A (Unsatisfactory) to match the current Bethesda 2001 Terminology. We do not anticipate that it would have a measurable impact on the overall cost of the program.

Inclusion of at least two HSIL or cancer cytology challenges per test: As required at § 493.945(b)(1)(ii), including a minimum of two response Category D (HSIL or cancer) cytology challenges in a 20 cytology challenge test would be equivalent to requiring at least one response Category D (HSIL or cancer) cytology challenge in a 10 slide test set (currently at § 493.945 (a)(1)). This change should have little or no impact as long as the number of required cytology challenges per testing event is doubled.

Continuous Validation of Cytology Challenges: Requiring PT programs to provide continuous validation of cytology challenges throughout their use in testing is currently a routine practice conducted by the three CMS-approved PT programs. This revision, proposed at § 493.945(c)(1)(ii), should not have an impact if required, and would ensure that cytology challenges maintain their acceptability for use in testing.

Appeals: The proposed rule specifies at § 493.945(b)(4) that PT programs would provide their appeals process in writing to all enrolled individuals. This change would have a minimal impact on program costs, since it could be done electronically or added to enrollment forms or other materials provided to each individual before their participation in a PT event.

C. Alternatives Considered

Because the proposed revisions to the gynecologic cytology PT requirements are interdependent, alternatives to each proposed change can not be considered separately without having an effect on the total process. Therefore, it is necessary to take these complexities into account when considering alternatives to the changes that are proposed.

For expansion of the test medium used, we considered maintaining the current requirement for glass slide challenges. However, the lack of adequate numbers of glass slides for a national PT program is the reason for the lengthy delay in national cytology PT implementation. Allowing other potential media would provide flexibility for future technology and accommodation of all individuals who need to be tested. In addition, to ensure continued testing of workplace performance, as more laboratories use computer-assisted screening, the regulations would need to be expanded to allow other types of challenges.

We considered testing frequencies less often than once every 2 years, but decided against incorporating a frequency of once every 3 years (recommended by CLIAC) or longer (recommended by some cytology professional organizations) due to concern that less frequent testing may allow poor performers to go undetected for a longer period of time. After agreeing to propose a testing frequency of at least once every 2 years, we also considered keeping the required number of ten challenges per event. However, this may also decrease the ability of the test to identify poor performers.

In determining the appropriate number of cytology challenges per testing event, we considered including more than 20, but we were unable to identify reliable data showing that the additional benefits for testing with a greater number of slides support the additional costs and resources that would be required. Also, as noted above, finding enough acceptable slides for testing was the primary cause for the delay in implementation of cytology PT and greatly increasing the number of challenges in each test could potentially produce a similar effect.

In looking at the total number of cytology challenges per event, we propose to increase the required number of response Category D (HSIL or cancer) cytology challenges from at least one in a 10 challenge test to at least two in a 20 cytology challenge test, and we considered whether requiring fewer or more of these challenges would be appropriate. However, we concluded that requiring at least two response Category D (HSIL or cancer) cytology challenges would be comparable with requiring at least one on a 10 challenge test, and data do not indicate this to be a problem.

Several alternatives were considered for revisions to the scoring scheme. The organizations provided variations on the scoring scheme and several other variations were suggested by the CLIAC workgroup to the CLIAC committee. CLIAC was presented with a data comparison of the various schemes. The schemes did not produce a wide variation in the number of individuals passing the testing event, so the CLIAC concluded that the scheme chosen should be reflective of normal work performance. Therefore, we believe the grading scheme proposed provides a greater balance between the identification of false positives and the identification of false negatives.

The only alternative to eliminating tissue biopsy confirmation of response Category C (LSIL) would be to continue to require this confirmation. The

feedback from the professional organizations and CLIAC was that this requirement eliminated potential challenges due to the current practice where patients with this diagnosis may not receive a biopsy for confirmation. Therefore, we are proposing to eliminate this requirement.

For the minor administrative changes that are being proposed, the only alternatives considered were to not make these changes. However, since the changes would standardize practices that are already in place among PT programs and laboratories, it seems reasonable to specify these practices in the appropriate sections of the regulation to ensure that they continue to be met by all as part of the PT process.

D. Conclusion

For these reasons, we are not preparing analyses for either the RFA or section 1102(b) of the Act because we have determined that this rule would not have a significant economic impact on a substantial number of small entities or a significant impact on the operations of a substantial number of small rural hospitals.

In accordance with the provisions of Executive Order 12866, this regulation was reviewed by the Office of Management and Budget.

List of Subjects in 42 CFR Part 493

Administrative practice and procedure, Grant programs—health, Health facilities, Laboratories, Medicaid, Medicare, Penalties, Reporting and recordkeeping requirements.

For the reasons set forth in the preamble, the Centers for Medicare & Medicaid Services proposes to amend 42 CFR chapter IV as set forth below:

PART 493—LABORATORY REQUIREMENTS

1. The authority citation for part 493 continues to read as follows:

Authority: Secs. 353 of the Public Health Service Act, secs. 1102, 1861(e), the sentence following sections 1861(s)(11) through 1861 (5)(16) of the Social Security Act (42 U.S.C. 263a, 1302, 1395x(e),the sentence following 1395x(s)(11)through 1395x(s)(16).

Subpart A—General Provisions

2. Section 493.2 is amended by—

A. Revising the definition of ''Challenge.''

B. Adding the definition of ''Cytology challenge'' in alphabetical order.

C. Revising paragraph (4) of the definition ''Unsuccessful participation in proficiency testing.''

The revisions and additions read as follows:

§ 493.2 Definitions.

* * * * *

Challenge means, for quantitative tests, an assessment of the amount of substance or analyte present or measured in a sample. For qualitative tests, a challenge means the determination of the presence or the absence of an analyte, organism, or substance in a sample. For cytology see the definition of ''Cytology challenge.''

* * * * *

Cytology challenge means a sample consisting of gynecologic cytology material that is used to evaluate the individual's locator and identification skills. Cytology challenge material may include glass slides, digital images, or other CMS approved testing media.

* * * * *

Unsuccessful participation in proficiency testing * * *

* * * * *

(4) Failure of a laboratory performing gynecologic cytology to meet the standard at § 493.853.

* * * * *

Subpart H—Participation in Proficiency Testing for Laboratories Performing Nonwaived Testing

3. Section 493.803 is amended by—

A. Revising paragraph (b).

B. Redesignating paragraph (c) as paragraph (d).

C. Adding a new paragraph (c).

The revisions and addition read as follows:

§ 493.803 Condition: Successful participation.

* * * * *

(b) Except as specified in paragraph (d) of this section, CMS imposes sanctions as specified in subpart R of this part when a laboratory fails to participate successfully in proficiency testing for a given specialty, subspecialty, analyte, or test as defined in this section.

(c) For gynecologic cytology, CMS imposes sanctions as specified in subpart R of this part when a laboratory fails to ensure that each individual performing gynecologic specimen examinations—

(1) Is enrolled in a CMS approved cytology proficiency testing program;

(2) Participates successfully in gynecologic cytology proficiency testing at least every 2 years; and

(3) Takes the applicable remedial action as described in § 493.853(c) when scoring less than 90 percent on gynecologic cytology proficiency testing.

* * * * *

4. Section 493.853 is revised to read as follows:

§ 493.853 Condition: Cytology: gynecologic specimen examinations.

To participate successfully in a cytology proficiency testing program for gynecologic specimen examinations (Pap smears), the laboratory must meet the requirements for an individual's enrollment, participation, and remediation as specified in paragraphs (a) through (c) of this section.

(a) *Enrollment.* The laboratory must—

(1) Ensure that each individual performing gynecologic specimen examinations is enrolled in a gynecologic cytology proficiency testing program approved by CMS; and

(2) Provide the proficiency testing program and CMS with the information specified by CMS that is necessary to identify all individuals performing gynecologic specimen examinations.

(b) *Participation.* The laboratory must ensure that—

(1) Each individual performing gynecologic specimen examinations is initially tested on-site in the laboratory on an announced or unannounced basis at least once every 2 calendar years;

(2) Each individual is notified of the date, time, and location of each announced testing;

(3) Each individual attains a score of at least 90 percent on each testing event and, if applicable, participates in remediation as specified in paragraph (c) of this section;

(i) An individual with an unexcused absence will receive a score of ''zero;''

(ii) For an individual with an excused absence, the laboratory must contact the proficiency testing program to determine the date, time, and location of the make-up examination;

(4) For on-site testing, if the laboratory chooses to designate a proctor, rather than have the proficiency testing program administer the test, the laboratory must ensure the testing event is properly administered as specified in this section. Any inappropriately administered testing event will result in a ''zero'' score for all participants. The laboratory is responsible for ensuring—

(i) All proctors successfully complete the proctor examination before administering the testing event;

(ii) The proctor follows the proficiency testing program's requirements for testing;

(iii) Each individual is tested independently, except as provided at § 493.945(c)(2);

(iv) Resources capable of assisting the individual in slide interpretation, including text books or electronic media, are not allowed in the testing area;

(v) All materials and results are kept confidential before, during, and after testing; and

(vi) Testing materials, including but not limited to glass slides, images, and test result sheets are not reproduced.

(c) *Remediation*. The laboratory must ensure that each individual who scores less than 90 percent on a testing event completes the required remediation and is retested within 45 days after completion of the remediation. If an individual scores less than 90 percent on:

(1) An initial test, the individual must be retested not more than 45 days after receipt of notification of his or her score.

(2) A second test (first retest), the individual must—

(i) Obtain documented remedial training and education in the area of deficiency;

(ii) Have all gynecologic preparations evaluated subsequent to the notification of the second test score reexamined by an individual who has successfully participated in a CMS approved proficiency testing event during the current 2 year cycle. Reexamination of gynecologic preparations must be documented.

(iii) Be retested within 45 days after completion of the remediation.

(3) A third test or any subsequent retest, the individual must—

(i) Obtain at least 35 hours of documented, continuing education in gynecologic cytology that focuses on the incorrect response categories; and

(ii) Discontinue examining gynecologic preparations immediately upon notification of a score of less than 90 percent and not resume examining gynecologic preparations until the individual obtains a score of at least 90 percent on a retest.

(iii) Be retested within 45 days after completion of the remediation.

§ 493.855 [Removed and Reserved]

5. Section 493.855 is removed and reserved.

Subpart I—Proficiency Testing Programs for Nonwaived Testing

6. Section 493.905 is revised to read as follows:

§ 493.905 Nonapproved proficiency testing programs.

If a proficiency testing program is disapproved or denied approval by CMS, CMS will notify the program and the program must notify all enrolled laboratories of the nonapproval and the reason for the nonapproval within 30 days of notification. The program will be disapproved or denied approval if the program—

(a) Fails to meet any criteria contained in § 493.901 through § 493.959 for approval of the proficiency testing program; or

(b) Is determined by CMS to have submitted falsified information to obtain approval of the program.

7. Section 493.945 is revised to read as follows:

§ 493.945 Cytology: Gynecologic examinations.

To be approved for proficiency testing in gynecologic cytology, the program must meet the requirements specified in paragraphs (a) through (c) of this section.

(a) *Frequency of testing events*. The program must provide:

(1) An initial, on-site test at least once every 2 years on an announced or unannounced basis. For announced testing events, the program must notify the laboratory at least 30 days before the testing event of the location, date, and time of testing. However CMS has the authority to authorize alternative sites for testing.

(2) A second test within 45 days after the laboratory is notified of an individual score of less than 90 percent on the initial testing event.

(3) A third test and any subsequent retests within 45 days after completion of remediation as specified in § 493.853(c)(2) and (c)(3). Any third test or subsequent retests must be administered by the proficiency testing program and may not be proctored by a laboratory designee.

(b) *Program description*. The program must—

(1) Provide test sets for each testing event composed of the following:

(i) A minimum of 20 cytology challenges. Proficiency testing programs may obtain glass slides from a laboratory provided the glass slides have been retained by the laboratory for the required period specified in § 493.1105(a)(7) and § 493.1274(f)(2). If slides are still subject to retention by the laboratory, they may be loaned to a proficiency testing program if the program provides the laboratory with documentation of the loan of the slides and ensures that slides loaned to it are retrievable upon request.

(ii) At least one cytology challenge representing response categories A, B, and C and at least two cytology challenges from response Category D for reporting proficiency testing results. The four response categories and their descriptions are as follows:

Response category	Description
A	Unsatisfactory: Specimen processed and evaluated but unsatisfactory for evaluation of epithelial abnormality. These factors include minimum squamous cellularity (conventional smears and liquid-based preparations), absence of endocervial/transformation zone component, or obscuring factors (>75 percent of squamous cells obscured assuming no abnormal cells identified).
B	Normal or Benign Changes includes: (1) Normal, negative or within normal limits. (2) Infection other than human papillomavirus (HPV) (for example, Trichomonas vaginalis, changes or morphology consistent with Candida spp., Actinomyces spp. or Herpes simplex virus). (3) Reactive and reparative changes (for example, inflammation, effects of chemotherapy or radiation).
C	Low Grade Squamous Intraepithelial Lesion includes: (1) Cellular changes associated with HPV. (2) Mild dysplasia/CIN–1.
D	High-Grade Lesion and Carcinoma includes: (1) High grade squamous intraepithelial lesions which include moderate dysplasia/CIN–2 and severe dysplasia/carcinoma in-situ/CIN–3. (2) Squamous cell carcinoma. (3) Adenocarcinoma and other malignant neoplasms.

(2) Ensure individuals complete a 20 cytology challenge testing event within 4 hours.

(3) Ensure that all 20 cytology challenge test sets provide for equitable testing among participants.

(4) Provide a written description of the appeals process that is available to all individuals enrolled in the program.

(5) Provide training for laboratory-designated proctors that includes—

(i) Written instructions for the laboratory to determine the number of proctors needed to administer the proficiency testing event, including contingency for a backup proctor if needed;

(ii) Written instructions for the laboratory director and proctor to ensure program procedures are fulfilled; and

(iii) A proctor examination that evaluates the proctor's understanding of proper testing protocol.

(6) Provide a written agreement, to be signed by the laboratory director and returned to the program before testing, stating the laboratory is responsible for and accepts responsibility for administering the proficiency testing as defined by the program and CMS.

(c) *Evaluation of an individual's performance*. The program must—

(1) Determine the accuracy of an individual's response on each cytology challenge by comparing the individual's response with the correct response specified by the four response categories listed in paragraph (b)(1)(ii) of this section. Determination of the correct response for each cytology challenge must include:

(i) A 100 percent consensus agreement among a minimum of three physicians who meet the requirements of cytology technical supervisor (as specified in subpart M of this part) and examine gynecologic preparations on a routine basis.

(ii) Continuous field validation of each cytology challenge by a method acceptable to CMS and that is disclosed to participants before enrollment in the program.

(iii) Confirmation by tissue biopsy of all cytology challenges that have a correct response of Category D (HSIL or cancer) either by comparison of the reported biopsy results or reevaluation of biopsy slide material by a physician certified in anatomic pathology.

(2) Test individuals qualified as cytology technical supervisors (as specified in subpart M of this part) under conditions comparable to their workplace performance in cytology. A cytology technical supervisor who routinely interprets gynecologic preparations that have—

(i) Been previously examined by a cytotechnologist may participate in the testing event using either a test set that has not been previously screened or a test set selected at random that has been previously screened by a cytotechnologist who works in the same laboratory.

(ii) Not been previously examined must be tested using a test set that has not been previously screened.

(3) Adhere to the grading scheme as follows:

(i) The individual's score for a testing event is determined by adding the point values achieved for each cytology challenge.

(ii) The point values for a 20 cytology challenge test for a technical supervisor qualified under § 493.1449(b) or (k) are:

Correct response	Technical supervisor examinee response			
	A—UNSAT	B—NEGATIVE	C—LSIL	D—HSIL
A—UNSAT	5	0	0	0
B—NEGATIVE	2.5	5	0	0
C—LSIL	0	0	5	2.5
D—HSIL	0	−5	2.5	5

(iii) The point values for a 20 cytology challenge test for a cytotechnologist qualified under § 493.1469 or § 493.1483 are:

Correct response	Cytotechnologist examinee response			
	A—UNSAT	B—NEGATIVE	C—LSIL	D—HSIL
A—UNSAT	5	0	0	0
B—NEGATIVE	2.5	5	0	0
C—LSIL	0	0	5	5
D—HSIL	0	−5	5	5

Subpart M—Personnel for Nonwaived Testing

§ 493.1451 [Amended]

8. In § 493.1451(c)(5) the reference ''493.855'' is revised to read ''493.853.''

(Catalog of Federal Domestic Assistance Program No. 93.778, Medical Assistance Program)

(Catalog of Federal Domestic Assistance Program No. 93.773, Medicare—Hospital Insurance; and Program No. 93.774, Medicare—Supplementary Medical Insurance Program)

Dated: November 13, 2007.

Julie Gerberding,

Director, Centers for Disease Control and Prevention.

Dated: November 15, 2007.

Kerry Weems,

Acting Administrator, Centers for Medicare & Medicaid Services.

Approved: October 9, 2008.

Michael O. Leavitt,

Secretary.

[FR Doc. E9–804 Filed 1–15–09; 8:45 am]

BILLING CODE 4120–01–P

Federal Register

Friday,
January 16, 2009

Part VI

Department of Health and Human Services

45 CFR Part 162

Health Insurance Reform; Modifications to the Health Insurance Portability and Accountability Act (HIPAA); Final Rules

DEPARTMENT OF HEALTH AND HUMAN SERVICES

Office of the Secretary

45 CFR Part 162

[CMS–0009–F]

RIN 0938–AM50

Health Insurance Reform; Modifications to the Health Insurance Portability and Accountability Act (HIPAA) Electronic Transaction Standards

AGENCY: Office of the Secretary, HHS.

ACTION: Final rule.

SUMMARY: This final rule adopts updated versions of the standards for electronic transactions originally adopted under the Administrative Simplification subtitle of the Health Insurance Portability and Accountability Act of 1996 (HIPAA). This final rule also adopts a transaction standard for Medicaid pharmacy subrogation. In addition, this final rule adopts two standards for billing retail pharmacy supplies and professional services, and clarifies who the ''senders'' and ''receivers'' are in the descriptions of certain transactions.

DATES: *Effective Dates:* These regulations are effective March 17, 2009 except for the provisions of 45 CFR part 162 Subpart S, which are effective January 1, 2010. The incorporation by reference of certain publications listed in the regulations is approved by the Director of the Federal Register as of March 17, 2009.

Compliance Dates: Compliance with the provisions of §§ 162.1102(c), 162.1202(c), 162.1302(c), 162.1402(c), 162.1502(c), 162.1602(c), 162.1702(c), and 162.1802(c) is required on January 1, 2012. Compliance with the provisions of § 162.1902 is required on January 1, 2013.

FOR FURTHER INFORMATION CONTACT: Lorraine Tunis Doo, (410) 786–6597.

I. Background

HIPAA mandated the adoption of standards for electronically conducting certain health care administrative transactions between certain entities. Through subtitle F of title II of HIPAA, the Congress added to title XI of the Social Security Act (the Act) a new Part C, entitled ''Administrative Simplification.'' Part C of title XI of the Act now consists of sections 1171 through 1180. These sections define various terms and impose several requirements on HHS, health plans, health care clearinghouses, and certain health care providers concerning the electronic transmission of health information. On August 17, 2000, we published a final rule entitled, ''Health Insurance Reform: Standards for Electronic Transactions'' in the **Federal Register** (65 FR 50312) (hereinafter referred to as the Transactions and Code Sets rule). That rule implemented some of the HIPAA Administrative Simplification requirements by adopting standards for eight electronic transactions and for code sets to be used in those transactions. Those transactions were: Health care claims or equivalent encounter information; health care payment and remittance advice; coordination of benefits; eligibility for a health plan; health care claim status; enrollment and disenrollment in a health plan; referral certification and authorization; and health plan premium payments. We defined these transactions and specified the adopted standards at 45 CFR part 162, subparts I and K through R.

Since the time of compliance with the first set of HIPAA standards, a number of technical issues with the standards, including issues resulting from new business needs, have been identified. Industry stakeholders submitted hundreds of change requests to the standards maintenance organizations, with recommendations for improvements to the standards. These requests were considered, and many were accepted, resulting in the development and approval of newer versions of the standards for electronic transactions. However, covered entities are not permitted to use those newer versions until the Secretary of Health and Human Services (HHS) adopts them by regulation for HIPAA transactions.

In addition to technical issues and business developments necessitating consideration of the new versions of the standards, there remain a number of unresolved policy issues that were identified by the industry early in the implementation period for the first set of standards, and those issues were never addressed through regulation. This final rule addresses those outstanding issues.

We refer readers to review the following regulations for a more detailed discussion of the changes to the standards for electronic transactions; the Transactions and Code Sets rule; the Modifications to Electronic Data Transaction Standards and Code Sets rule (68 FR 8381), published in the **Federal Register** on February 20, 2003 (hereinafter the Modifications rule); Standards for Privacy of Individually Identifiable Health Information (65 FR 82462), published in the **Federal Register** on December 28, 2000; Standards for Privacy of Individually Identifiable Health Information; Final Rule (67 FR 53182) published in the **Federal Register** on August 14, 2002; and the Modifications to the Health Insurance Portability and Accountability Act (HIPAA) Electronic Transaction Standards proposed rule (73 FR 49796), published in the **Federal Register** on August 22, 2008 (hereinafter the August 22, 2008 proposed rule) for further information about electronic data interchange, the statutory background and the regulatory history.

In the August 22, 2008 proposed rule, we included a table that shows the full set of HIPAA transaction standards adopted in the Transactions and Code Sets rule, as we proposed to modify them in the August 22, 2008 proposed rule (73 FR 49744), and adopt in this final rule. The list is reproduced here in Table 1:

TABLE 1—HIPAA STANDARD AND TRANSACTIONS

Standard	Transaction
ASC X12 837 D	Health care claims—Dental.
ASC X12 837 P	Health care claims—Professional.
ASC X12 837 I	Health care claims—Institutional.
NCPDP D.0	Health care claims—Retail pharmacy drug.
ASC X12 837 P and NCPDP D.0	Health care claims—Retail pharmacy supplies and professional services.
NCPDP D.0	Coordination of Benefits—Retail pharmacy drug.
ASC X12 837 D	Coordination of Benefits—Dental.
ASC X12 837 P	Coordination of Benefits—Professional.
ASC X12 837 I	Coordination of Benefits—Institutional.
ASC X12 270/271	Eligibility for a health plan (request and response)—dental, professional and institutional.

TABLE 1—HIPAA STANDARD AND TRANSACTIONS—Continued

Standard	Transaction
NCPDP D.0	Eligibility for a health plan (request and response)—Retail pharmacy drugs.
ASC X12 276/277	Health care claim status (request and response).
ASC X12 834	Enrollment and disenrollment in a health plan.
ASC X12 835	Health care payment and remittance advice.
ASC X12 820	Health plan premium payment.
ASC X12 278	Referral certification and authorization (request and response).
NCPDP D.0	Referral certification and authorization (request and response)—Retail pharmacy drugs.
NCPDP 5.1 and NCPDP D.0	Retail pharmacy drug claims (telecommunication and batch standards).
NCPDP 3.0	Medicaid pharmacy subrogation (batch standard).

II. Provisions of the Proposed Regulations and Responses to Comments

On August 22, 2008 we proposed to adopt updated standards for the eight adopted electronic transactions standards. We proposed to revise § 162.1102, § 162.1202, § 162.1302, § 162.1402, § 162.1502, § 162.1602, § 162.1702, and § 162.1802 to adopt the ASC X12 Technical Reports Type 3 (TR3), Version 005010 (hereinafter referred to as Version 5010) as a modification of the current X12 Version 4010 standards (hereinafter referred to as Version 4010/4010A) for the HIPAA transactions. In some cases, the Technical Reports Type 3 have been modified by Type 1 Errata, and these Errata were also included in our proposal. The full discussion of our proposal to revise each of the above-referenced provisions can be found in the August 22, 2008 proposed rule (73 FR 49745–49750).

We proposed to revise § 162.1102, § 162.1202, § 162.1302, and § 162.1802 by adding new paragraphs (c)(1) to each of those sections to adopt the NCPDP Telecommunication Standard Implementation Guide, Version D, Release 0 (Version D.0) and equivalent NCPDP Batch Standard Implementation Guide, Version 1, Release 2 (Version 1.2) (hereinafter collectively referred to as Version D.0) in place of the NCPDP Telecommunication Standard Implementation Guide, Version 5, Release 1 and equivalent NCPDP Batch Standard Implementation Guide, Version 1, Release 1 (hereinafter collectively referred to as Version 5.1), for the following retail pharmacy drug transactions: Health care claims or equivalent encounter information; eligibility for a health plan; referral certification and authorization; and coordination of benefits. The full discussion of our proposal to revise each of the above-referenced provisions can be found in the August 22, 2008 proposed rule (73 FR 49751).

We proposed to add a new subpart S to 45 CFR part 162 to adopt a standard for the subrogation of pharmacy claims paid by Medicaid. The transaction is the Medicaid pharmacy subrogation transaction, defined at proposed § 162.1901, and the new standard is the NCPDP Batch Standard Medicaid Subrogation Implementation Guide, Version 3, Release 0 (Version 3.0), July 2007 (hereinafter referred to as Version 3.0) at proposed § 162.1902. The standard would be applicable to Medicaid agencies in their role as health plans, as well as to other health plans that are covered entities under HIPAA, but not to providers because this transaction is not utilized by them. For a complete discussion of the Medicaid pharmacy subrogation transaction and the proposed adoption of Version 3.0, see the August 22, 2008 proposed rule (73 FR 49751–49752).

We proposed to revise § 162.1102 to adopt both Version D.0 and the 837 Health Care Claim: Professional ASC X12 Technical Report Type 3 for billing retail pharmacy supplies and professional services. We proposed that the use of either standard would be determined by trading partner agreements. The full discussion of the proposed change can be found in the August 22, 2008 proposed rule (73 FR 49752–49754).

We proposed to revise the descriptions of the transactions at § 162.1301, § 162.1401, and § 162.1501 to more clearly specify the senders and receivers of those transactions. See the August 22, 2008 proposed rule for a full discussion of this proposal (73 FR 49754). For Versions 5010 and D.0, we proposed a compliance date of April 1, 2010 for all covered entities. For Version 3.0, we proposed a compliance date 24 months after the effective date of the final rule, except for small health plans, which would have to be in compliance 36 months after the effective date of the final rule. Finally, we proposed to revise § 162.923 to resolve the problem of different compliance dates for different entities, such that the requirement for covered entities to use the standards applies only when the covered entity conducts transactions with another entity that is also required to comply with the transaction standards.

In response to the August 22, 2008 proposed rule, we received 192 timely public comments from all segments of the health care industry, including providers, physician practices, hospitals, pharmacies, other health care professionals, health plans, clearinghouses, vendors, standards development organizations, professional associations, consultants, and State and Federal government agencies. We reviewed each submission, and grouped similar or related comments together to address in this final rule, which also enabled us to identify the areas of the proposed rule that required review in terms of policy, consistency or clarity.

In the following sections, we present comments and responses generally in the order in which the topics were presented in the August 22, 2008 proposed rule. There were a number of comments on topics that were not addressed in the proposed rule, and our responses to those comments are provided at the end of this section. Some comments we considered out of scope of the August 22, 2008 proposed rule, and we list several of them at the end of this section as well.

A. Adoption of X12 Version 5010 Technical Reports Type 3 for HIPAA Transactions

In the August 22, 2008 proposed rule, we proposed to revise § 162.1102, § 162.1202, § 162.1302, § 162.1402, § 162.1502, § 162.1602, § 162.1702, and § 162.1802 to adopt Version 5010. In some cases, the version was modified by Type 1 Errata, and these Errata were also proposed for adoption. In general, deficiencies inherent in the current standards continue to cause industry-wide difficulties to such a degree that much of the industry rely on ''companion guides'' and proprietary ''work-arounds.'' The four types of changes in Version 5010 are structural, front matter, technical improvements

and data content changes. The complete discussion of this proposal can be found in the August 22, 2008 proposed rule (73 FR 49745–49749).

Comment: Commenters overwhelmingly supported our proposal to adopt Version 5010 because of the technical and business improvements made to the standards. With respect to the specific changes made to Version 5010, commenters expressed their appreciation for the tightened, clear situational rules which will reduce analysis time for everyone, and minimize the need for companion guides. Commenters said that the improved eligibility responses and better search options will improve efficiency for providers and reduce phone calls for both providers and health plans. Commenters also said that the detailed clarifications of commonly misunderstood areas such as corrections and reversals, refund processing, and recoupments should result in a consistent implementation of the X12 835 (remittance advice), which is not the case today. They noted that incorrect implementations of the X12 835 have prevented providers from implementing electronic posting, or automating the data entry of reimbursement information, as widely as they might otherwise. Correct implementation of the X12 835 will reduce phone calls to health plans, reduce appeals due to incomplete information, eliminate unnecessary customer support, and reduce the cost of sending and processing paper remittance advices. Commenters also noted that the greatly improved X12 278 for referrals and authorizations could encourage wider implementation and save labor costs. Commenters noted that the new claims transaction standard contained in Version 5010 significantly improves the reporting of clinical data, enabling the reporting of ICD–10–CM diagnosis codes and ICD–10–PCS procedure codes, and distinguishes between principal diagnosis, admitting diagnosis, external cause of injury and patient reason for visit codes. Commenters noted that these distinctions will improve the understanding of clinical data and enable better monitoring of mortality rates for certain illnesses, outcomes for specific treatment options, and hospital length of stay for certain conditions, as well as the clinical reasons for why the patient sought hospital care. Commenters also noted that another improvement in the updated claims standard is the ability to handle identification of the ''Present on Admission'' (POA) indicator to the diagnoses.

Response: We appreciate the overwhelming support of commenters for the adoption of Version 5010.

Comment: We received a few comments urging X12 to publish an all-inclusive list of changes made to the standards. Commenters said that a change log is issued after each year's changes are approved. Since Version 5010 incorporates multiple years of changes, users would be required to consolidate multiple change logs. A cumulative change log that includes changes from each interim year should be provided so that all of the changes are contained in one document.

Response: We agree that it would be helpful to have a comprehensive list of the changes made to a current version of the standards, and that it would make it easier for covered entities to identify all of the changes that have occurred since the last version of the standard was adopted. We have made this recommendation to the X12 work group as well as the Designated Standards Maintenance Organizations (DSMO).

Many commenters submitted technical comments relating to Version 5010. The comments included highly technical issues and suggested structural changes to the standards, definitional issues requiring clarification, and interpretational issues regarding routine usage of the standards. In total, there were over 470 technical comments. We provided all of the technical comments to X12, which had convened a committee of subject matter experts to review the technical comments and provide us with technical input. The workgroup reviewed each comment and categorized them into several groups as follows: (1) The committee agrees with the comment and the change will be made in the next version of the TR3s (212 comments); (2) the committee does not agree with the comment and believes that a change is not appropriate (156 comments); (3) the functionality already exists elsewhere in the TR3s; commenter requires explanation and references (5 comments); and (4) the comment is a request for interpretation and/or training, and not a request for a change in the TR3s (43 comments). There were 29 comments that were not requests for action, but rather statements of opinion about Version 5010. Of the 212 comments falling into the first category, most were clarifications that would improve usability of the TR3s, but would not adversely affect business processes. Therefore, we will not request that X12 accommodate these changes in Version 5010, but rather would address them in the course of developing later versions of the standards.

After publication of the final rule, all of the technical comments reviewed by the X12 workgroup, with the dispositions, will be posted on the CMS Web site at *http://www.cms.hhs.gov,* in the Regulations and Guidance section, as well as on the X12 portal at *http://www.x12.org.* Where education and/or additional communication are needed about the functionality of the transactions, X12 will provide that in future programs, in collaboration with appropriate industry groups. These Standards Development Organizations (SDO)-sponsored efforts will specifically address the third category of comments in which the committee stated that the functionality exists elsewhere in the TR3s, or the fourth category of comments where the commenter specifically requested additional interpretation guidance.

During the comment review process, X12 provided input to HHS, and we selected several comments to include in this final rule as examples of the types of technical issues that were submitted during the public comment period. In general, suggested corrections, clarifications, and definitional changes to Version 5010 transaction standards will be reserved for future versions of the standards. Any suggested changes to the structure of the standard will need to be evaluated through the standards development process and considered for future versions of the standard. All comments submitted during the comment period for the August 22, 2008 proposed rule will automatically be included in the X12 process for considering change requests. Submitters will not need to re-submit those comments.

Comment: We received a few comments requesting clarification of a statement in the August 22, 2008 proposed rule regarding the field size issue in Version 4010/4010A to accommodate ICD–10. In the August 22, 2008 proposed rule, we said that Version 4010/4010A does not provide a means for identifying ICD–10 procedure or diagnosis codes on an institutional claim, and that Version 5010 anticipates the eventual use of ICD–10 procedure and diagnosis codes by adding a qualifier as well as the space needed to report the number of characters that would permit reporting of ICD–10 procedure and diagnosis codes on institutional health care claims. Commenters pointed out that the more accurate explanation for why Version 4010/4010A cannot accommodate ICD–10 is because of the lack of a qualifier

or indicator for the code set name rather than the size of the field for the codes.

Response: We note the correction.

Comment: One commenter recommended a correction to Version 5010, specific to the claims transactions, to enable it to support the creation of a proposed National Joint Replacement Registry.

Response: Because of the technical nature of this comment, we consulted with the X12 work group to better understand the context of the comment and the stated concern. Based on our current understanding of the comment, we agreed with the X12 workgroup on this recommendation for the next version of its TR3s, once the registry is finalized. This means that Version 5010 will not have changes made to it for this purpose at this time, but that the next version of the standards will likely have addressed and resolved this issue.

Comment: We received several comments regarding the external code sets used in the standards, such as claims adjustment reason codes. Several commenters wrote about the X12 835 remittance advice code mapping requirements, stating that providers continue to struggle with implementation of the X12 835 as many health plans struggle to provide quality mapping from proprietary to standard codes in the health care payment and remittance advice transaction. Commenters requested that guidelines for mapping be provided.

Response: During our consideration of these comments, which we believe apply to the technical standards maintenance process, and which we feel are outside of the scope of this rule, we consulted with the WEDI 835 special work group (SWG) to confirm that the stated concerns were being addressed in its standards revision process. The WEDI 835 SWG indicated that it is developing a recommended set of mapping instructions and information for the industry. In addition, the WEDI 835 SWG has adopted recommendations that will assist in facilitating a more standard implementation of the X12 835.

Comment: We received a comment from a large specialty association representing anesthesiology. This group responded to a discussion in the August 22, 2008 proposed rule in which we indicate that efficiencies are gained by allowing only the reporting of minutes for anesthesia time in Version 5010, whereas Version 4010/4010A allows for reporting of anesthesia time in either units or minutes. The commenter stated that this change to Version 5010 will not add efficiency and/or cost savings to the submission and processing of claims for anesthesia care, and requested that units continue to be permitted, or alternatively, that additional time be allowed to implement this change because of its impact on business processes and contracts.

Response: Due to the nature of this comment, which addresses potential efficiencies resulting from a technical provision in the Version 5010 implementation guide, we consulted with the X12 workgroup. Based on our discussion with the X12 workgroup, we think that the appropriate course for the commenter to follow would be to submit a change request to the workgroup because the X12 development cycle is ongoing, and change requests will continue to be accepted and reviewed for consideration for the next version of the standards. Given the change in this final rule in the compliance date for Version 5010, we believe the commenter's request for more time to implement the data requirement is addressed.

Comment: Several commenters suggested changes to the situational rule for the health care diagnosis codes segment on the X12 837D for dental claims. The situational rule requires inclusion of diagnosis codes only under circumstances involving oral surgery or anesthesia. Commenters suggested that today's dental health plans are offering benefit plans that provide additional coverage for dental services when certain medical conditions exist. The commenter suggested that the situational rule be expanded to allow for dental providers to include diagnosis codes in cases where specific dental procedures may minimize the risks associated with the connection between the patient's oral and systemic health conditions.

Response: We do not feel that these comments are within the scope of the proposed rule, but instead pertain to certain technical aspects of the X12 Technical Reports. As such, we shared the comments with the X12 expert committee, which agreed with this recommendation and committed to incorporating this change into future versions of X12 Technical Reports Type 3. As stated earlier, X12 will provide guidance on how to accommodate the functionality in Version 5010.

Comment: A few comments focused on the ability of dental providers to report tooth numbers on the X12 837P claim. According to commenters, there is a need for all dental providers to be able to report tooth numbers on medical claims. There were two specific issues raised in this regard. First, even though a field for the tooth number has been designated temporarily, to accommodate claims from oral surgeons and other practitioners, a permanent data element is needed. The second issue pertains to the use of either a national or international tooth numbering system. These commenters stated that both numbering systems should be accommodated in the X12 837 Dental and Professional Guides. Currently, only the Universal National Tooth Designation System is accommodated in Version 5010.

Response: Once again, we believe these comments pertain more directly to the technical provisions of the relevant implementation guides. We therefore consulted with the X12 expert committee, which agreed with the first issue regarding the ability of dental providers to report tooth number beyond oral surgery, and committed to allowing this level of reporting in future versions of the X12 standards. Regarding the issue of which tooth numbering system should be accommodated in Version 5010, the X12 committee encourages the commenters to initiate the discussion through the DSMO process with additional business justification for future consideration. The X12 portal has several HIPAA Implementation Guide Requests (HIRs) available which explain how to use the claims transaction for dental services in the interim (*http://www.X12.org*).

Overall, the technical comments received on Version 5010 did not represent issues that would prevent this version of the standard from being adopted as currently proposed. However, enhancements will either be implemented in future versions or further vetted for inclusion in future versions.

B. Adoption of NCPDP Telecommunication Standard Implementation Guide Version D Release 0 (D.0) and Equivalent Batch Standard Implementation Guide, Version 1, Release 2 (1.2) for Retail Pharmacy Transactions

We proposed to revise § 162.1102, § 162.1202, § 162.1302, and § 162.1802 by adding new paragraphs (c)(1) to each of those sections to adopt the NCPDP Telecommunication Standard Implementation Guide, Version D, Release 0 (Version D.0) and equivalent NCPDP Batch Standard Implementation Guide, Version 1, Release 2 (Version 1.2) in place of the NCPDP Telecommunication Standard Implementation Guide, Version 5, Release 1 (Version 5.1) and equivalent NCPDP Batch Standard Implementation Guide, Version 1, Release 1 (Version 1.1), for the following retail pharmacy drug transactions: health care claims or

equivalent encounter information; eligibility for a health plan; referral certification and authorization; and coordination of benefits.

Since the time that Version 5.1 was adopted as a transaction standard in the Transactions and Code Sets rule, the industry has submitted requests for modifications to Version 5.1 to NCPDP. Some of these modification requests were necessary for reasons similar to those for the X12 standards—changing business needs—many of which were necessitated by the requirements of the Medicare Prescription Drug, Improvement and Modernization Act of 2003 (MMA). The complete discussion of our proposal and reasons for the proposal can be found in the August 22, 2008 proposed rule (73 FR 49751).

Comment: Commenters unanimously supported the adoption of Version D.0, agreeing that Version D.0 is needed so that transactions for the Medicare Part D pharmacy benefit can be conducted. We did not receive any technical comments on Version D.0.

Response: We agree that Version D.0 is needed to enhance retail pharmacy transactions, as well as to better support Medicare Part D requirements. We are adopting Version D.0 as proposed.

C. Adoption of a Standard for Medicaid Pharmacy Subrogation: NCPDP Medicaid Subrogation Implementation Guide, Version 3.0 for Pharmacy Claims

We proposed adding a new subpart S to 45 CFR part 162 to adopt a standard for the subrogation of pharmacy claims paid by Medicaid. We proposed that the transaction would be the Medicaid pharmacy subrogation transaction, defined at proposed § 162.1901, and that the standard for that transaction would be the NCPDP Batch Standard Medicaid Subrogation Implementation Guide, Version 3, Release 0 (Version 3.0), July 2007 (hereinafter referred to as Version 3.0) at proposed § 162.1902. The complete discussion of our proposal and reasons for the proposal can be found in the August 22, 2008 proposed rule (73 FR 49751–49752).

Comment: Commenters unanimously supported the adoption of Version 3.0 for Medicaid pharmacy subrogation, and we did not receive any comments in opposition. We also did not receive any technical comments on Version 3.0.

Response: We are adopting Version 3.0 as the HIPAA standard at § 162.1902, for the Medicaid pharmacy subrogation transaction, as described at § 162.1901.

Comment: Several commenters requested that standards for Medicaid subrogation also be adopted for other claims types in addition to pharmacy claims. The commenters pointed out that the ASC X12 837 claim standards used for processing institutional, professional and dental claims already include the ability to perform Medicaid subrogation and that these standards have also gone through the DSMO approval process.

Response: We appreciate the suggestion that we adopt standards for conducting Medicaid subrogation for both pharmacy and medical claims. However, since we did not propose the adoption of Version 5010 for Medicaid subrogation of non-pharmacy claims, we cannot adopt it in this final rule. HHS will consider whether to adopt the X12 standard for non-pharmacy Medicaid subrogation transactions. If we pursue that option, we would propose it in an NPRM and take industry comments into consideration before we would adopt a standard.

We note that, although we are not adopting a standard for Medicaid subrogation for non-pharmacy related claims in this rule, those standards are available for use. Covered entities are not prohibited from using Version 5010 for non-pharmacy Medicaid subrogation transactions between willing trading partners. Some Medicaid agencies have already been successfully using this approach with commercial health plans.

Comment: We received comments recommending that HHS clarify that State Medicaid agencies would not be prohibited from continuing to bill using paper claims when necessary.

Response: We recognize that there may be situations where it is not cost-effective for State Medicaid agencies and certain plans to use an electronic format for pharmacy claims. For example, while a particular plan may process a large volume of claims, the same plan may have only a small number of Medicaid pharmacy subrogation claims. In addition, States continue to make advancements in identifying other liable payers. This enables States to avoid payment by returning claims to providers and instructing them to bill the other payers. This will result in a decrease in the volume of subrogation claims for Medicaid. Health plans do not always have to conduct electronic transactions for which a standard has been adopted, but if they do, the standard must be used. Section 162.923, however, places additional requirements on health plans so that if a covered entity wanted to conduct the transaction electronically with the Medicaid agency, the agency could not refuse to do so. Medicaid agencies could continue to bill on paper as long as both parties to the transaction agree to conduct the paper transaction. However, Medicaid agencies will still be required to have the capacity to transmit and receive the Medicaid pharmacy subrogation transaction electronically, in standard format, which the Medicaid agency could choose to do through its own system or through a health care clearinghouse.

Comment: We received a comment from a pharmacy that supports the adoption of Version 3.0. The pharmacy requested that HHS enforce the use of the standard and eliminate the practice used by some States of recouping money from the pharmacy instead of the third party, which puts additional burden on the pharmacy to bill the third party and in some instances re-bill Medicaid.

Response: It is not in the purview of this regulation to eliminate the practice of recoupment from providers. The adoption of the Medicaid pharmacy subrogation standard will not restrict States that choose to recoup from providers in lieu of seeking reimbursement from the third party directly. Once a claim is paid to a pharmacy, the State has the option to seek recovery directly from liable third party payers, or to seek recovery as an overpayment from the provider. We believe that the adoption of the Medicaid pharmacy subrogation standard will greatly improve the efficiency and effectiveness of the health care system which should result in more direct billing of third parties in States that routinely recoup from providers.

D. Adoption of the NCPDP Telecommunication Standard Implementation Guide Version D Release 0 (D.0) and the Health Care Claim: Professional ASC X12 Technical Report Type 3 for Billing Retail Pharmacy Supplies and Services

We proposed to revise § 162.1102 to adopt both Version D.0 and the 837 Health Care Claim: Professional ASC X12 Technical Report Type 3 for billing retail pharmacy supplies and professional services. The use of either standard would be determined by trading partner agreements. The complete discussion of our proposal and the reasons for the proposal can be found in the August 22, 2008 proposed rule (73 FR 49752–49754).

Comment: We received several comments in support of the proposal to allow the use of either standard for this purpose. Commenters agreed that the NCPDP Telecommunication and Batch Standard supports the billing of the various code sets needed to bill retail pharmacy supplies and professional services (for example, Medication Therapy Management (MTM), vaccine

administration), and that they can use this NCPDP standard for most of their transactions. The commenters said that workflow will be less disrupted when pharmacies can bill for services and supplies using the same NCPDP standard as that used for pharmacy drug claims. Commenters said that the ability to use the NCPDP standard will improve customer service and lower administrative costs. These commenters said that in some cases the X12 standard was appropriate, and that they preferred to have the option of using it on a case-by-case basis.

Response: We are adopting our proposal to allow the use of either Version D.0 or Version 5010 for billing retail pharmacy supplies and professional services.

Comment: A few commenters noted their support of the proposal, particularly as it relates to improving interoperability of claims processing and adjudication, and suggested that we clarify how our proposal would be implemented with respect to trading partner agreements. Another commenter was cautiously supportive, and said that it agreed with the use of either standard, but that we should emphasize the requirement that trading partner agreements be voluntary, and that a health plan could not create a mandate to use one standard over the other.

Response: We reiterate that, by adopting both standards for the one transaction, we are supporting current industry practices with respect to the use of these standards for billing supplies and services that are commonly dispensed or conducted via the retail pharmacy channel. With the exception of the requirements set forth in § 162.915, regarding certain particulars that may not be included in trading partner agreements, we do not dictate the terms of trading partner agreements but expect that health plans and providers will continue to collaborate on the processes for these claim types.

In addition to revising the regulation text at § 162.1102 to allow for the use of either the X12 or the NCPDP standard for billing retail pharmacy supplies and professional services, we are also making a conforming change to the definition of ''standard transaction'' at § 162.103. We indicate that a standard transaction means a transaction that complies with ''an'' applicable standard adopted under this part, rather than ''the'' applicable standard adopted under this part.

Comment: One commenter said that if we are adopting standards for retail pharmacy supplies and services, that we should clearly state that both adopted standards apply to Medication Therapy Management (MTM) services. The commenter stated that MTM is a service designed to ensure that Part D drugs prescribed to targeted beneficiaries are appropriately used to optimize therapeutic outcomes through improved medication.

Response: In the August 22, 2008 proposed rule, we address MTM services, noting that the MMA provides coverage for MTM, which is a distinct set of services that encompasses a broad range of professional activities and responsibilities. We noted that some pharmacies believe it is appropriate to use the NCPDP standard for MTM services because the services are part of the prescription. Other industry segments, however, believe it is appropriate to use the X12 standard for billing MTM services because they interpret ''professional services'' to require the use of a professional claim (837P) (73 FR 49753). We agree with the commenter and affirm that MTM is included as a service to which both standards apply.

E. Modifications to the Descriptions of Transactions

We proposed to revise the descriptions of the transactions at § 162.1301, § 162.1401, and § 162.1501 to clearly specify the senders and receivers of those transactions. We proposed to revise the descriptions for the following transactions: (1) Enrollment and Disenrollment in a Health Plan; (2) Referral Certification and Authorization; and (3) Health Care Claim Status.

Comment: The majority of commenters expressed their support for the revised transaction descriptions.

Response: We are adopting the revisions to the regulation text as proposed.

Comment: Several pharmacies and a national pharmacy chain noted that real-time pharmacy claim transaction statuses are given using the NCPDP standard in real time, whereas Version 4010/4010A is a batch standard. A commenter requested that our definition of the health care claim status transaction specify that Version 5010 (ASC X12 276/277) is used to provide status on X12 transactions for medical claims only, because the commenter wanted clear differentiation between pharmacy and non-pharmacy claims.

Response: We are not making a change in our regulation text because we do not think it is appropriate. In § 162.1401, the description of the health care claim status transaction only describes the actions and specifies the senders and receivers of the transaction, whereas § 162.1402 clearly identifies the standard that is adopted for the function described in § 162.1401.

Comment: We received a comment requesting a technical clarification to the enrollment and disenrollment in a health plan transaction (§ 162.1501). The commenter stated that there has always been a concern as to when the enrollment/disenrollment (834) transaction was required. This commenter believed that the definition of a group health plan could be applied to the plan sponsor role of a self-funded employer group, which would require the plan sponsor to use the enrollment transaction. The commenter recommended that the final rule include wording to further clarify this requirement, by adding to § 162.1501 the following: For the purpose of enrollment and disenrollment in their health plan, the term sponsor shall include self-funded employer groups that transmit electronic information to their Third Party Administrator (TPA) to establish or terminate insurance coverage for their member.

Response: We proposed to describe this transaction as being ''the transmission of subscriber enrollment information from the sponsor of the insurance coverage, benefits, or policy, to a health plan to establish or terminate insurance coverage.'' We provided in the August 22, 2008 proposed rule that a sponsor is an employer that provides benefits to its employees, members, or beneficiaries through contracted services. We further noted that numerous entity types act as sponsors in providing benefits, including, for example, unions, government agencies, and associations (73 FR 49754). We do not think it is appropriate to further revise the definition of the enrollment and disenrollment in a health plan transaction to specify that a sponsor includes any one particular type of entity, as the commenter suggests. We reiterate here that it is not mandatory for a sponsor that is not otherwise a covered entity to use the transaction standard because, as a non-covered entity, HIPAA does not apply to it.

F. Compliance and Effective Dates

Versions 5010 and D.0: We proposed to adopt a date of April 1, 2010 for all covered entities to be in compliance with Versions 5010 and D.0. In the August 22, 2008 proposed rule, we discussed our reasons for proposing the compliance timeframe we did. We justified the proposed date based on assumptions that the industry had sufficient expertise in using the X12 and NCPDP standards, and that the system and business changes could therefore be

efficiently coordinated, requiring less time than the original standards for implementation. We also discussed at length an alternative we considered, but did not propose—a staggered compliance timeframe for Versions 5010 and D.0 (72 FR 49754–49757). We received more than 100 comments on compliance dates, with virtually all indicating that the proposed compliance date was not feasible given the extensive changes in Versions 5010 and D.0 from the current standards, and the need for a coordinated implementation and testing schedule. As stated at the beginning of the preamble, this rule is effective March 17, 2009. We note that the effective date is the date that the policies set forth in this final rule take effect, and new policies are considered to be officially adopted. The compliance dates, which are different than the effective dates, are the dates on which entities are required to have implemented the policies adopted in this rule. The compliance dates we now adopt for this regulation are as follows:

- Versions 5010 and D.0—January 1, 2012.
- Version 3.0 for all covered entities except small health plans—January 1, 2012.
- Version 3.0 for small health plans—January 1, 2013.

Comment: The majority of commenters opposed the proposed compliance date for Versions 5010 and D.0 and requested additional time for implementation. Most commenters stated that the proposed date did not provide sufficient time to adequately execute a gap analysis for all of the transactions, build programs, train staff, and conduct outreach and testing with trading partners. These commenters stressed the need to avoid compliance extensions or contingency periods because they complicate implementations and increase costs. Health plans and providers expressed concern that the proposed compliance date was unrealistic because large segments of the industry have not been able to meet any of the deadlines for the HIPAA standards to date, including Medicare and many State Medicaid agencies.

The majority of commenters who opposed the April 2010 compliance date suggested a thirty-six month compliance period instead. These commenters said that this amount of time is needed for full implementation because the same programmers, developers and operations staff who must re-design technical and business infrastructure activities to accommodate Versions 5010 and D.0 will also be needed to do similar work to implement ICD–10. In fact, some commenters suggested that the impact of ICD–10 is so significant, that there might not be sufficient industry resources to address Versions 5010 and D.0 because of competing resource needs. A number of health plans stated that, based on their own impact assessments, not only would record layouts and mapping changes be required, but also changes to edits, business procedures and system capabilities. They stated that there are nearly 850 changes between Version 4010/4010A and Version 5010 to be analyzed and potentially implemented. One example is the X12 270/271 eligibility transaction, which will require a more detailed response with less information supplied. Plans will have to determine where the data can be accessed and whether it exists within the current software; in many cases, it will not be a case of moving a few extra fields, and databases may have to be modified or created. These commenters said the complexity of the Technical Reports Type 3 requires in-depth analysis, which will have to be conducted through formal procedures (impact analysis, requirements definition) before design, build, and testing can take place. Similar comments were received regarding the compliance date for Version D.0.

All entities that submitted comments agreed with the proposed adoption of that standard, but did not think enough time was given for implementation. Commenters stated that the transition from Version 5.1 to Version D.0 has functional complexity that will require standardization of practices, new fields, new situational rules for each data element, as well as education, testing and training. These commenters pointed out that, although there have been 22 version releases of the NCPDP standard since Version 5.1, the majority of the industry was reluctant to develop software for any version that was not adopted under HIPAA. These commenters suggested a 36-month implementation schedule for Version D.0.

Response: Based on the comments and our analysis of those comments, we are adopting a compliance date later than the date we proposed for all covered entities for Version 5010 and Version D.0. We are requiring that all covered entities be in compliance with Versions 5010 and D.0 on January 1, 2012.

We believe that it is crucial for covered entities to meet certain milestones during the compliance period in order to ensure full, successful, and timely compliance. The NCVHS recommended a framework for compliance that we believe will be very effective for these purposes. Therefore, we describe below the NCVHS recommendation and the schedule to which we expect covered entities to adhere during the compliance period.

A letter from the NCVHS to Secretary of HHS Michael Leavitt dated September 26, 2007 (*http://www.ncvhs.hhs.gov*) summarized the Committee's Standards and Security Subcommittee's HIPAA transaction hearings of July 2007, noting that ''the timing of standards implementation is critical to success.'' The NCVHS weighed the industry testimony presented at that hearing and noted that HHS should consider establishing two different levels of compliance for the implementation of Version 5010. Level 1 compliance, as interpreted by the NCVHS, means that the HIPAA covered entity could demonstrate that it could create and receive Version 5010 compliant transactions. Level 2 compliance was interpreted by the NCVHS to mean that HIPAA covered entities had completed end-to-end testing with all of their partners and were ready to move into full production with the new version. The NCVHS letter stated that: ''it is critical that the industry is afforded the opportunity to test and verify Version 5010 up to two years prior to the adoption of Version 5010.'' The letter's Recommendation 2.2 states that ''HHS should take under consideration testifier feedback indicating that for Version 5010, two years will be needed to achieve Level 1 compliance.''

Accordingly, our expectations are as follows. The Level 1 testing period is the period during which covered entities perform all of their internal readiness activities in preparation for testing the new versions of the standards with their trading partners. When we refer to compliance with Level 1, we mean that a covered entity can demonstrably create and receive compliant transactions, resulting from the completion of all design/build activities and internal testing. When a covered entity has attained Level 1 compliance, it has completed all internal readiness activities and is fully prepared to initiate testing of the new versions in a test or production environment, pursuant to its standard protocols for testing and implementing new software or data exchanges. The Level 2 testing period is the period during which covered entities are preparing to reach full production readiness with all trading partners. When a covered entity is in compliance with Level 2, it has completed end-to-end testing with each of its trading

partners, and is able to operate in production mode with the new versions of the standards by the end of that period. By ''production mode,'' we mean that covered entities can successfully exchange (accept and/or send) standard transactions and as appropriate, be able to process them successfully.

During the Level 1 and Level 2 testing periods, either version of the standards may be used in production mode—Version 4010/4010A and/or Version 5010, as well as Version 5.1 and/or Version D.0—as agreed to by trading partners. Covered entities should be prepared to meet Level 1 compliance by December 31, 2010, and Level 2 compliance by December 31, 2011. After December 31, 2011, covered entities may not use Versions 4010/4010A and 5.1. On January 1, 2012, all covered entities will have reached Level 2 compliance, and must be fully compliant in using Versions 5010 and D.0 exclusively.

The final compliance date provides an implementation period of 36 months, or three years, as requested by the majority of the commenters. Given this revised implementation period that accommodates NCVHS and industry concerns, we expect that covered entities will be able to meet the compliance date. We anticipate that, since there was support for a phased-in schedule, health plans and clearinghouses will make every effort to be fully compliant on January 1, 2012. Covered entities are urged to begin preparations now, to incorporate effective planning, collaboration and testing in their implementation strategies, and to identify and mitigate any barriers long before the deadline. While we have authorized contingency plans in the past, we do not intend to do so in this case, as such an action would likely adversely impact ICD–10 implementation activities. HIPAA gives us authority to invoke civil money penalties against covered entities who do not comply with the standards, and we have been encouraged by industry to use our authority on a wider scale. We refer readers to the HIPAA Enforcement Final Rule (71 FR 8390), published in the **Federal Register** on February 16, 2006, for our regulations implementing that HIPAA authority.

Compliance Date for Version 3.0

For implementation of Version 3.0 for the Medicaid pharmacy subrogation transaction, we proposed to revise § 162.900 to adopt a compliance date of 24 months after the effective date of the final rule for all covered entities, except for small health plans, which would have 36 months. We also proposed to revise § 162.923, entitled ''Requirements for covered entities'' to make paragraph (a) applicable only to covered entities that conduct transactions with other entities that are required to comply with a transaction standard. We proposed this change in order to address the situation where transactions require the participation of two covered entities, where one entity is under a different set of compliance requirements. We expect that the change we proposed to § 162.923 would resolve the problem of a State Medicaid agency attempting to transmit a transaction using Version 3.0 to a small health plan before the small health plan is required to be compliant and could, therefore, reject the transaction on the basis that it is in the standard format (73 FR 49754–49755).

Comment: We received one comment explaining that Version 3.0 had to be implemented either at the same time as Version D.0, or after, because certain data elements present in D.0, but not in Version 5.1, were needed in order to use Version 3.0. The commenter also believed that willing trading partners would be able to agree to use the Medicaid pharmacy subrogation standard voluntarily at any time after the effective date and before the compliance date.

Response: We agree that Versions D.0 and 3.0 are tied together by certain data elements necessitating their concomitant or sequential implementation respectively. To accommodate these technical needs, we are making the effective date of Version 3.0 later than the effective date for the other parts of this rule. We are making the effective date for the portion of the rule concerning the adoption of Version 3.0 January 1, 2010, which means that covered entities, except small health plans, must be in compliance with Version 3.0 no later than January 1, 2012. Small health plans must be in compliance no later than January 1, 2013. This gives States and health plans a two-year planning, implementation and testing window, in contrast to the three years being provided for Versions 5010 and D.0. States and plans are encouraged to do as much planning in the year before the effective date (calendar year 2009) as possible, to take advantage of that window and the work already under way for Version D.0, since Versions D.0 and 3.0 are tied together. In other words, States may use calendar year 2009 to conduct a preliminary analysis of Version 3.0 changes, in concert with their analysis of Version D.0 changes. States should also prepare and submit their budget requests to secure funding for design, development and implementation in 2010 and 2011, which would leave time to conduct testing with trading partners between January 2011 and January 2012.

Comment: We received a number of comments from providers and health plans supporting the proposed revision to § 162.923(a).

Response: We are adopting the revision to § 162.923(a), as proposed in the August 22, 2008 proposed rule.

Timeline

In the proposed rule, we provided a timeline for implementation and compliance of ICD–10 and Versions 5010 and D.0. We included the timeline to enable the industry to conduct preliminary planning (73 FR 49757), and indicated that the proposed timeline represented our best estimate for industry implementation at the time. We also indicated that the timeline was subject to revision as updated information became available. We provide the revised timeline here.

TIMELINE FOR IMPLEMENTING VERSIONS 5010/D.0, VERSION 3.0 AND ICD–10

Version 5010/D.0 and Version 3.0	ICD–10
01/09: Publish final rule	01/09: Publish Final Rule.
01/09: Begin Level 1 testing period activities (gap analysis, design, development, internal testing) for Versions 5010 and D.0.	
01/10: Begin internal testing for Versions 5010 and D.0.	
12/10: Achieve Level 1 compliance (Covered entities have completed internal testing and can send and receive compliant transactions) for Versions 5010 and D.0.	
01/11: Begin Level 2 testing period activities (external testing with trading partners and move into production; dual processing mode) for Versions 5010 and D.0.	01/11: Begin initial compliance activities (gap analysis, design, development, internal testing).

TIMELINE FOR IMPLEMENTING VERSIONS 5010/D.0, VERSION 3.0 AND ICD–10—Continued

Version 5010/D.0 and Version 3.0	ICD–10
01/12: Achieve Level 2 compliance; Compliance date for all covered entities. This is also the compliance date for Version 3.0 for all covered entities except small health plans *. 01/13: Compliance date for Version 3.0 for small health plans.	10/13: Compliance date for all covered entities (subject to the final compliance date in any rule published for the adoption of ICD–10).

* Note: Level 1 and Level 2 compliance requirements only apply to Versions 5010 and D.0

Other Comments Pertaining to the Compliance Date Specific to Versions 5010 and D.0

Comment: We received a few comments from Medicaid agencies explaining why the compliance dates were problematic from a funding perspective. Commenters explained that the State budget environment requires more lead time to obtain project authority and resources on the scale necessary to implement Versions 5010, D.0, and 3.0. One State said that it could not begin any substantial required documentation activities until there is a final rule. Finally, a number of States said that they are facing fairly significant budget shortages. Commenters said that, even with 90 percent federal matching rates, resource requests based on a proposed rule would be unlikely to receive approval from legislatures.

Response: The comments from the States were compelling with respect to funding and planning issues, and were helpful in our reconsideration of the proposed compliance dates. We acknowledge the need to work with States to coordinate their budget requests and implementation activities with legacy system replacement.

Comment: Another State agency recommended that the final rule contain a waiver provision to permit covered entities to seek a waiver for implementation of Version 5010 in any existing legacy system that is scheduled for replacement.

Response: Waivers cannot be accommodated. Neither the statute nor the regulations provide for waivers for meeting the standards set forth under HIPAA.

Comment: A few commenters favored the proposed compliance dates for Versions 5010 and D.0, citing their eagerness to begin benefiting from the updated standards as soon as possible, particularly because it has been so long between adoption of Versions 4010/4010A1 and 5.1, and the updated versions of those standards.

Response: We believed the proposed compliance dates were reasonable for the reasons provided in the proposed rule (73 FR 49754–49757). Based on the comments however, we acknowledge that many significant actions would have to take place very quickly (for example, budget requests, hiring and recruitment of subject matter experts, design work, schedule of programming installations, etc.) in order to meet an April 2010 compliance date, and as stated above, have adopted a later date for both standards.

Comment: The majority of commenters agreed that small health plans should not have additional time (for example, an additional year as in past regulations) to become compliant with Versions 5010 and D.0 because these entities are, or should be, already using Version 4010/4010A and Version 5.1 through clearinghouses or their own systems. Small health plans should be at the same stage of implementation as any other covered entity, meaning that their organizations, business associates and trading partners are now well-versed in the technology and requirements for using Version 4010/4010A and Version 5.1, and should not require additional time to accommodate the new versions. All covered entities are essentially at the same point with respect to having implemented the standards, identified and resolved business process issues, trained staff, and incorporated the use of standards process into their existing infrastructure.

Response: We agree with commenters regarding the compliance dates for small health plans, and are requiring all covered entities, including small health plans, to be in compliance on the same date.

Comment: We received several comments supporting a different schedule which involved staggering compliance based on either covered entity type or transaction type over the course of 3 years. In the first scenario, all health plans and clearinghouses would be required to be compliant one year before covered health care providers in order to ensure that providers could begin testing with all trading partners the following year. For example, under a 36-month compliance scenario, health plans and clearinghouses would have to be in compliance 24 months after the effective date, and prepared to conduct testing with trading partners over the next 12 months. We also received a few comments that suggested a staggered implementation schedule by transaction type. For example, the updated standards for health care claims and related transactions could be implemented first, followed by updated standards for eligibility transactions, claims status transactions, etc. However, the majority of commenters who had opinions about a staggered implementation schedule based on transaction type believe that assigning different compliance dates to different transactions would not have the intended effect of ensuring compliance by the deadline, nor would it facilitate the testing process. These commenters explained that the use of certain transactions, particularly auxiliary transactions (for example, authorizations and referrals), is so inconsistent across the industry, there would be no effective means by which to stagger their implementation. The use of the auxiliary transactions is uneven—many entities do not use the claims status transactions because they have on-line access to their billing files; many do not use the eligibility transaction because, historically, it has not provided useful information. Thus, entities actually have very little experience with these transactions, and may continue to use them minimally. They do not wish to expend limited resources on a transaction that will not have a return on investment in the early years.

Response: We believe that different compliance dates for different types of covered entities could significantly complicate trading partner testing, particularly for those entities that function as both health plans and health care providers, as well as for other entity types that perform in multiple roles. It is likely that different compliance dates for different entity types could be confusing to the industry, and could actually delay some implementations while entities waited for trading partner compliance. For

example, this approach presumes that providers and their software vendors will be making system and operational changes at the same time as the health plans and clearinghouses in order to be ready for testing.

Comment: We received a number of comments about our assumption in the August 22, 2008 proposed rule that staggered implementation dates for health plans and clearinghouses would not be feasible because of robust trading partner tracking systems that might be needed so that entities could know which providers were testing Versions 5010 and/or D.0, which were using Versions 4010/4010A and/or 5.1, and which had fully converted to Versions 5010 and/or D.0. This would be very complicated to build and manage between the thousands of providers, health plans, vendors and clearinghouses. Commenters also expressed concern about the impact on coordination of benefits with secondary health plans, since each health plan would be implementing Version 5010 at different times. One commenter said that the reality is that all covered entities would need robust trading partner tracking systems for any implementation plan, and that coordination of benefits would be disrupted with any implementation plan because not all covered entities would be ready on the same date to send and receive the updated HIPAA standards. Commenters said that covered entities would have to support the dual use of Version 4010/4010A and Version 5010 until the compliance date in any scenario. They explained that all covered entities would need to test at different times during the implementation process, and that a complex scheduling process would need to exist between health plans, clearinghouses and providers testing and migrating to the updated transactions at different times.

Response: We agree with the commenters' points regarding the complexity of programming, testing and coordinating all implementation efforts, regardless of the timeline, if we were to adopt a staggered implementation schedule by entity type or transaction type.

Comment: Some commenters said that all health plans, including State Medicaid agencies, must be held to the same compliance dates, and that compliance with prior HIPAA implementations varies between non-government health plans and State Medicaid agencies. Since Medicaid agencies have lagged behind and not met implementation deadlines, hospitals and providers have had to maintain a dual submission strategy which incurs significant additional costs to the providers. We received a number of comments expressing particular concern about Medicare mandating full compliance prior to the compliance date adopted by the final rule. The commenters specifically referenced written communication they had received from Medicare stating that it (Medicare) would have an early compliance date for Version 5010 for the coordination of benefits transaction. The commenters stated that, if Medicare requires covered entities to be ready to shift to dual processing several months before the adopted compliance date, there will be significant implementation problems for many providers and other health plans. The commenters also stated that, if Medicare mandates use of Version 5010 for coordination of benefits, before any of the other transactions were mandated for use, other health plans would have to run separate processing systems for just the one transaction. Other commenters stated that health plans do not maintain separate processing systems for each additional health plan with which they conduct COB transactions. Commenters stated that, if Medicare is allowed to mandate early compliance, it would exacerbate an already difficult situation, and reiterated that no entity should be allowed to require their trading partners to implement the standards in a production environment, prior to the HHS compliance date, if the trading partner did not agree. These commenters feel that such a prohibition would help ease the implementation as solutions are deployed across all entities, over a defined period of time.

Response: We agree that no covered entity, including State Medicaid agencies or Medicare, should be allowed to require compliance earlier than the compliance date we are adopting in this final rule. If entities were allowed to require earlier compliance, this would cause undue financial and operational burdens on other segments of the industry. For example, one State chose to implement the NPI before the compliance deadline, which caused significant difficulties and expenses for providers because, in some cases, they were not ready to comply, and therefore had to revert to paper. In many cases, the State's other trading partners, namely other commercial health plans and the Federal Medicare program, were not prepared to accept the NPI, which meant that providers (and their vendors and clearinghouses) in that State had to support a complex infrastructure in which the NPI was included on some claims, but not on others. HHS will ensure that appropriate agencies and departments work together to monitor Medicaid implementation work plans, testing and readiness on a regular basis throughout the implementation period.

We are adopting a revision to § 162.925, by adding a new paragraph (a)(6), to specify that a health plan is not permitted to delay, reject, or attempt to adversely affect the other entity or the transaction on the basis that the transaction does not comply with another adopted standard during the period from the effective date of the final rule until the compliance date. With respect to coordination of benefits, this means, for example, that Medicare will not be able to require of trading partners that they be in full compliance with Version 5010 prior to January 1, 2012, unless willing trading partners agree to do so. Health plans that participate in Medicare's Coordination of Benefits program will be able to work with Medicare to arrange a mutually agreeable testing schedule in order to expedite this transaction, but they are not required to do so, and may revert to receiving claims directly from providers if they choose to do so.

Comment: Commenters said that a key component of any implementation schedule is testing, and a large number of commenters stressed the importance of both internal testing as well as external testing with trading partners. Many commenters stated that testing often occurs at or near the end of the compliance period, and that such last-minute testing causes scheduling problems and creates uncertainty about whether changes were applied correctly. Commenters said that, in many cases, hospitals and other providers must wait for vendors and health plans to schedule testing. Many commenters said that health plans do not provide sufficient advance communication about their testing efforts or their readiness to implement the standards, and providers have indicated that it is difficult to obtain the name of the individual or department within the health plan with whom they should coordinate. One commenter explained that testing is done in three parts: Testing of the standards themselves for workability; conformance testing of products and applications that send and/or receive the transactions; and end-to-end testing to ensure interoperability among trading partners. All three levels of testing are critical to the successful implementation of Versions 5010, D.0 and 3.0, and efforts to execute all three levels of testing will minimize delays and avoid many of the

complications afflicting previous implementations.

Response: We agree that testing is absolutely crucial to resolving problems before the implementation date to ensure that there are no payment delays or service disruptions. In the August 22, 2008 proposed rule, we discussed and emphasized the importance of testing to a successful and timely implementation (73 FR 49755–49756). Based on the industry's experience in previous implementations, it is clear to us that testing is core to resolving issues early and effectively. We have revised the regulation text that identifies the adopted standard for each transaction, in every instance, to enable testing to occur during the period from the effective date of the final rule until the compliance date for Versions 5010 and D.0. Our revised regulations permit the dual use of standards during that timeframe, so that either Version 4010/41010A1 or Version 5010, and either Version 5.1 or Version D.0, may be used for the period prior to the compliance date. We note that the adoption of two standards for one transaction during the period prior to compliance does not mean that covered entities must use both standards, but, rather, that the use of either standard is permitted.

Comment: Another commenter said that the importance of vendor compliance cannot be underestimated, as practice management system vendors are critical to provider compliance. Any delays in vendor implementation of compliant products will delay end-to-end testing, so providing sufficient time for the vendors to design, build and test, will only facilitate the process. A large software vendor explained that, to enable compliance with Versions 5010 and D.0, users must continue to use their current software while testing new software updates to accommodate the changes. The commenter explained that there are often several stages of software revisions, and this necessity may add additional time to the development and implementation process. Finally, testing and certification activities on each version must take place to ensure compatibility and stability of software. This process almost always takes longer than expected.

Response: While we do not have the authority to regulate vendors, as they are not covered entities, we agree about the critical importance of vendor testing, and that, in particular, accurate, quality software development and testing are critical to the successful implementation of the updated versions. We also agree that appropriate time is necessary for installation, user training and coordination of testing with trading partners. By adopting a later compliance date, we hope to ensure that software development vendors have sufficient time to conduct the appropriate internal and external testing such that the software they provide to their covered entity clients is compliant with the standards, capable of facilitating the transmission and receipt of the new versions of the standards.

G. Miscellaneous/General Other Comments

This section includes comments and responses to other issues raised during the public comment period.

Claims Attachments

Comment: We received several comments requesting that HHS not adopt standards for electronic health care claims attachments at this time because implementation of Versions 5010, D.0, and 3.0, and ICD–10 would make it impossible to also implement standards for claims attachments. One commenter stressed that, since claims attachments included another new standard—the HL7 Attachment Specifications—the industry would not be able to accommodate the additional work needed to implement the claims attachment standard if Versions 5010, D.0, and 3.0, and ICD–10 also had to be implemented in that same time period.

Response: We appreciate and will consider the commenters' concerns for not wanting to have to implement the electronic health care claims attachment standards at the same time as Versions 5010, D.0 and 3.0, and ICD–10.

Standards Adoption and Modifications

In the August 22, 2008 proposed rule, we provided an explanation of the procedures for maintaining existing standards and for adopting new standards and modifications to existing standards (73 FR 49744–49755). That section of the proposed rule describes how § 162.910 sets out the standards maintenance process and defines the role of SDOs and the DSMOs. For additional information about the DSMO process and procedures, refer to the Web site at *http://www.hipaa-dsmo.org/Main.asp*. We also described the process for adopting modifications to standards under § 162.910, which is discussed in detail in the Transactions and Code Sets rule (65 FR 50312), and implemented at § 162.910.

The proposed modifications and the new transaction standards were developed through the process that conforms with § 162.910. We received many technical comments specific to the Version 5010 standards, indicating that there are still opportunities for improvement in that version. We did not receive any technical comments specific to Version D.0.

Comment: A few commenters stated that greater industry involvement in the X12 standards development and balloting process would be helpful to their industry segment, e.g., health care providers, hospitals, health plans, health care clearinghouses and vendors.

Response: We have suggested to the X12 SDO that it consider the following: (1) Expanding the current outreach efforts to industry to obtain more diverse representation from all covered entity types. This would take place during the development of new versions as well as during the balloting process; and (2) securing industry volunteers to test the balloted standards before they are proposed to NCVHS. That way, when the suggested modifications are submitted to NCVHS for consideration, even greater industry support can be expected.

Comment: We received a few comments suggesting that HHS streamline the standards adoption process. Commenters said that the marketplace is evolving at a rapid pace, creating new products, new technologies and new methods of conducting business. They stressed that, even though X12 continues to improve the standards each year, the industry has not had the opportunity to benefit from necessary and helpful changes because too much time elapses between the adoption of versions. Others reiterated that there is a need for the updated standards to be available for use by the industry as they are tested and balloted. For example, one entity found that the industry needs information about tax advantaged payment mechanisms (for example, Medical Savings Accounts, Health Savings Accounts, Health Reimbursement Accounts, etc.) that are now commonly in place to support the movement to consumer-directed health care. Version 5010 does not contain the information needed by patients or providers to determine the financial impacts and flows. Commenters said that the industry cannot wait another eight years to be able to exchange this type of crucial information for critical market needs. They suggest that a more streamlined way to develop, implement and adopt updated standards must be found. Commenters suggested that HHS work with industry stakeholders to identify and implement a way to increase the predictability and timeliness of adopting updated standards, including a means by which the rulemaking process might not be

necessary to allow the industry to use updated versions of the standards.

Response: HHS has considered similar concerns in the past, and continues to assess potential alternatives within the context of HIPAA and the Administrative Procedures Act (APA). HHS will continue to work with industry to identify a means by which updated standards can be used on a timelier basis, consistent with the law.

Comment: One commenter recommended that HHS adopt the X12 standard transaction formats in the final rule, but not the specific versions of the X12 standards or Technical Reports Type 3 (TR3s). The commenter stated that it has been eight years since publication of the Transactions and Code Sets rule adopting the Version 4010/4010A implementation guides. The long passage of time since the initial adoption has resulted in widespread workarounds in the industry to address Version 4010/4010A's deficiencies. The commenter suggests that HHS could designate the DSMO coordinating committee to biannually determine whether a change makes sense for the industry, and which updated TR3s would be implemented. The DSMO committee would still provide open public access to the standards development process, but this approach would eliminate the time-consuming NPRM steps and enable smaller iterative version updates to take place. The commenter noted that the ongoing maintenance of the adopted code sets is already handled outside of the NPRM process. Under this recommendation, new standards, as opposed to updates or modifications to the standards, would continue to be adopted by HHS utilizing the regulatory process.

Response: HHS has evaluated options for streamlining the process of adopting new versions of the standards, and agrees with commenters that alternate, more expedient methods are necessary, consistent with HIPAA and the APA. We are committed to working with industry and the standards organizations to develop a process that can be proposed in the near future, consistent with the law. With respect to the commenter's reference to the ongoing maintenance of the adopted code sets, HHS notes that there is specific statutory authority in HIPAA which permits the routine maintenance, testing, enhancement and expansion of code sets outside of the rulemaking process; modifications to adopted code sets, however, are adopted by means of the rulemaking process.

Outreach, Education and Training

In the proposed rule, at 73 FR 49756, we stated that HHS would begin preparations for, and execution of, outreach and education activities, and the engagement of industry leaders and stakeholder organizations to provide a variety of educational and communication programs for various constituencies.

Comment: Many commenters advised HHS to establish a network of training and outreach partners to work collaboratively to educate the industry, and outlined the education and outreach strategies that will be needed. Commenters stated there were needs for: National associations to collaborate on education efforts; a consistent set of messages and/or materials from authoritative sources; recognition that different audiences may need different levels of training; and in-person training to supplement Internet training and printed documents. Several commenters recommended that HHS develop a consistent standard set of training materials for distribution to industry groups as soon as possible. The commenter suggested that key professional associations should be the source for common educational materials. One commenter suggested that HHS collaborate with other organizations to publish a ''lessons learned'' guidance document. A number of commenters recommended that HHS begin outreach activities as quickly as possible, and to clearly differentiate between HHS Policy guidance (for the industry at large) and Medicare guidance (specifically for Medicare providers). Other commenters agreed, indicating that this was important because Medicare policies do not often apply to other covered entities' policies, and information is confusing to providers when it is not clearly differentiated. Another commenter provided a summarized list of requested technical assistance which included migration tools that automatically translate Version 4010/4010A to Version 5010, and Version 5010 to Version 4010/4010A.

Response: We agree that it is important that consistent and accurate messages and/or materials be developed by authoritative sources, and will work closely with industry to put together a comprehensive, diverse plan that addresses Medicare-specific policies, as well as industry-wide policies and implementation issues.

We agree that different audiences may need different levels of training. Our current plan is to develop and disseminate high-level materials, and we anticipate that the industry will continue to offer the more in-depth materials that specific stakeholder groups may need. HHS already dedicates a section of its Web site to the HIPAA regulations, including guidance papers, FAQs, and links to external Web sites and to other useful resources. The Web site is *http://www.cms.hhs.gov*.

Comment: We received a number of comments suggesting that HHS ensure better coordination of the communication of, by, and between, Medicare and Medicaid.

Response: We agree that all segments of the industry should collaborate and communicate on implementation to avoid misunderstanding and to coordinate testing schedules. We will work with State Medicaid agencies to support their development of communication and outreach initiatives as we develop the overarching implementation strategy for education. We will also help to ensure that there are regular opportunities for Medicare and Medicaid to collaborate on implementation strategies.

Companion Guides

In the August 22, 2008 proposed rule, we discussed the deficiencies in Version 4010/4010A and Version 5.1, and the fact that the industry has come to rely upon health plan-specific companion guides to address the ambiguities in the implementation guides for each of the standards (73 FR 49746). It is possible that the reliance on companion guides has minimized some of the potential benefits offered by the standards. Based on testimony from the standards organizations and other industry representatives to NCVHS, the improvements to Version 5010 should minimize dependence on companion guides. Some of those improvements include clarifications of the standard requirements, and consistency in requirements across all of the transactions. In the August 22, 2008 proposed rule, we said that companion guides could potentially be eliminated if the updated versions of the standards were adopted.

Comment: We received a number of comments from the industry on this subject, offering support for the elimination of companion guides because of the complexities they create in implementing the standards. Health plans were less supportive of a complete elimination of companion guides, but did, in general, comment that the use of companion guides could be reduced, and that their content could be less complex. A few commenters requested that HHS prohibit the use of companion guides. They justified this

recommendation based on the use of these guides continuing to undermine the potential of standards. A few of the clearinghouse commenters suggested that companion guides be limited to providing supplemental information and instruction, but that they could not be used to mandate the use of certain situational fields. Other commenters felt that the next version of the standard should do away with nearly all situational data elements, and only leave a bare minimum of fields eligible to be situational, thus further reducing the need for companion guides. A few of the commenters who supported the use of companion guides said that these would always be necessary because health plans would always have unique business rules, and that sometimes these rules or practices were to the advantage of the provider.

Response: We acknowledge the issues presented by companion guides, but note that we do not have the authority to expressly prohibit the use of these guides. However, based on our review of many such documents, and the ongoing efforts of the industry to collaborate, we strongly discourage health plans from having companion guides unless they are focused significantly on the basics for connectivity, trading partner arrangements, and use of situational data elements. We encourage X12 to evaluate, and address as appropriate, industry comments specific to situational data elements, so that the minimum number of fields remain situational. This will enhance standardization and further reduce the need for companion guides. We also note that we have already published FAQs clarifying that, if companion guides contradict the implementation guides, the transaction will not be compliant. Covered entities may use the existing enforcement process to submit official complaints to HHS. Once an investigation is opened, HHS will review the companion guide at issue and a determination will be made as to its compliance with the standard(s).

Standardization of Data Content

Comment: We received a few comments requesting that HHS support the work of some industry groups, such as the Coalition for Affordable and Quality Healthcare (CAQH), that are attempting to standardize the use of data content to maximize the benefits of transaction standards—in other words, some industry representatives are trying to build consensus on the data elements that everyone will request and provide, to make implementation more consistent throughout the industry. A few commenters said that one group has been working on standard content for the eligibility standard, so that the transaction provides more robust and useful information above and beyond what is currently a ''yes/no'' requirement in response to a request for information about an individual's eligibility for health plan benefits. One commenter requested that HHS support the CAQH certification process for the use of the eligibility transaction, in which organizations voluntarily agree to have their programming reviewed and approved by CAQH, and those organizations agree to use all of the same data elements as others who are participating in the certification program.

Response: We do support the work of individuals and organizations in efforts to make the standard transactions more useful to the industry as a whole. While HHS cannot mandate participation in any certification programs, we do support any efforts towards improved compliance with the standards, as well as efforts towards maximizing the usefulness and usability of the standards. We also reiterate that we have published FAQs clarifying how a covered entity may file a complaint against another entity who it believes may not be in compliance with the implementation guides.

Definition of Compliance

Comment: We received a few comments suggesting that we adopt a definition of the term ''compliance,'' using the text from the TR3 guides, which provides that compliance indicates the receiver of a standard transaction does not have to reject a transaction that is not in compliance with all of the rules within the standard. According to commenters, the TR3 guides have a definition of compliance that states a covered entity is out of compliance if it receives and accepts a transaction that is a non-standard transaction. These commenters believe this statement conflicts with an HHS FAQ which states that a receiver may not accept a non-compliant transaction. The commenter suggests that the sender of the transactions is responsible for the compliance of the transaction, and HHS should not consider the receiver to be out of compliance if it accepts a non-compliant transaction. Another commenter said that HHS should encourage an ''ignore, don't reject'' approach to implementation, which would mean that, if a transaction is submitted conforming to the standard, but it contains more information than is necessary for an entity to process that transaction, the additional information should be ignored by the receiver, and the transaction not rejected.

Response: The definitions in the TR3 reports are not specific to the compliance of the transaction with the HIPAA rules, so the way ''compliance'' is defined by the TR3 reports does not apply to compliance under HIPAA. We believe our regulations sufficiently address the requirements for compliance. Our regulations at § 162.923 address the requirements for a covered entity to conduct a standard transaction when it conducts a HIPAA transaction using electronic media, and we define ''standard transaction,'' as revised in this rule, as ''a transaction that complies with an applicable standard adopted under this part.'' Regarding the commenter's suggestion of an ''ignore, don't reject'' policy, we point out that § 162.925(a)(3) provides that a health plan may not reject a standard transaction on the basis that it contains data elements not needed or used by the health plan. Finally, we do have an enforcement program through which covered entities may file complaints, and we continue to encourage the industry to utilize this program when faced with conflicts about the compliance of a transaction.

Pilots

Comment: We received a number of comments suggesting that standards should be pilot tested before adoption. These commenters said that pilot testing the standards is needed long before a standard is proposed for adoption because such testing identifies potential pit-falls and could identify and correct unanticipated issues with a particular standard before it is officially adopted. A few commenters noted the lack of a pilot testing process and suggested that HHS, with industry input, define a pilot testing process for future standards. Another commenter recommended that pilot testing proceed in a certain sequence, beginning with internal unit testing, and followed by system testing and integration testing, and ultimately ending with trading partner testing. One commenter stated that, without workability testing, the government, X12 and the industry would be repeating implementation mistakes that were made with Version 4010/4010A. That same commenter recommended that the provisions for permitting exceptions from the requirements to comply with the standards in order to test proposed modifications (§ 162.940) be suspended until the current version of a standard was no longer in use, in other words, that some date certain would be set to ''retire'' or sunset a particular version of a standard. The

commenter said that such a suspension would represent cost and administrative savings to all parties because it would simplify the process of accommodating new versions of the standards. We also received a comment suggesting that HHS fund pilot testing and allow an additional twelve months for the testing before the compliance date of a final rule, implying future final rules. No commenters suggested that Version 5010 be tested prior to adoption; rather, recommendations were for the future review and adoption of new versions of the standards.

Response: We recognize the value of pilot testing and its importance in the standards implementation process, and intend to work with the industry to define parameters for pilot testing in the future. We also encourage industry stakeholders and the standards organizations to take the lead for initiating pilot tests and monitoring the success of such tests.

Acknowledgements

Version 5010 accommodates the acknowledgement transaction, for the data receiver to communicate any errors or transmission problems back to the sender. Many health plans and clearinghouses use acknowledgement transactions, and they are free to do so using the standards they choose for that transaction. We did not propose to adopt a standard for the acknowledgement transaction in the proposed rule, so we will not adopt one here.

Comment: We received several comments on this subject, with most commenters indicating that acknowledgements improve the process of receiving and correcting an error and resubmitting the correction back to the receiver. These commenters suggested that HHS adopt Version 5010 for the acknowledgement transaction. Commenters said that migration to standard acknowledgement transactions would offer significant business benefits by ensuring that transactions are received and front-end errors reported on a timely and consistent basis. In spite of the support for adopting an acknowledgement transaction standard, commenters also mentioned that they did not wish in any way to delay overall implementation of Version 5010 by waiting until an acknowledgement transaction standard is proposed and adopted. In other words, if the choice was to wait to adopt Version 5010 until the NCVHS advises the Secretary to also adopt Version 5010 as the standard for the acknowledgement transaction, the commenters did not want to see their suggestion go forward.

Response: Before we would adopt an acknowledgement transaction standard, such standard would have to have been vetted through the standards adoption process that includes approval of a DSMO change request, recommendation by the DSMOs to the NCVHS, and recommendation by the NCVHS to the Secretary. Even though the chair of the X12 standards workgroup testified to the NCVHS in July 2007, and recommended adoption of an acknowledgement transaction standard for inclusion with NCVHS' recommendation for the adoption of Version 5010, NCVHS did not include an acknowledgement transaction standard in its recommendations. Nonetheless, the fact that we have not adopted an acknowledgement standard does not preclude the industry from using Version 5010 to conduct the transaction between willing trading partners. We will consider the adoption of a standard for the acknowledgement transaction at the time we receive a recommendation from NCVHS.

Real-Time Eligibility

Comment: A few commenters stated that there was a business need for a real-time eligibility transaction standard for all participants in healthcare delivery. They stated that, without a national standard, varying approaches to real-time eligibility will be detrimental to providers and plans that do business on a national basis. The commenters identified a number of organizations such as WEDI, CAQH and Blue Cross Blue Shield of North Carolina that support real-time eligibility transactions.

Response: Similar to a standard for the acknowledgement transaction, adopting a standard for real-time eligibility transactions would have to be vetted through the standards adoption process described above. NCVHS did not include a real-time eligibility transaction standard in its recommendations, and we are unable to adopt one at this time.

HHS Funding the Purchase of TR3 Reports

When the Transactions and Code Sets rule was published, HHS negotiated a contract with the publisher of the Version 4010/4010A implementation guide to enable the industry to download the guides at no cost. This practice ended in 2006. At that time, very few downloads or copies were being ordered, and we had no complaints about individual providers, plans or clearinghouses paying the fee. HHS did not have a similar arrangement with NCPDP, so the industry has always paid for guides for those standards.

Comment: A few commenters suggested that HHS should pay for the industry to access copies of Version 5010. These commenters stated that small providers could not afford to buy the set of guides, which currently cost approximately $800 for the set, or $175 for each guide. Several other commenters expressed concern about the cost of the X12 TR3s and a new requirement that covered entities purchase these guides. Commenters noted that HHS underwrote the Version 4010/4010A guides on behalf of covered entities through that implementation effort and believe that it is the most beneficial way for covered entities to access and implement new versions.

Response: It is not uncommon for standards organizations to charge a fee for copies of their standards. NCPDP charges such a fee for their standards, which HHS has never covered for the industry. We do not agree that the price for the guides will negatively impact small providers because we think it is unlikely that small providers will find them useful in implementing Version 5010. We understand that small providers usually rely on software vendors to make their systems compliant, and that it is the vendors who will require the guides for programming. We expect that, as in the past, vendors and professional associations will provide necessary education and training for the provider staff on the system changes that will require operational changes. Software vendors typically have multiple clients, and we expect that they will only need to purchase one, or at most, just a few sets of the standards to program for all of their clients. Such multiple usages should defray the modest expense.

HIPAA Enforcement

At present, most formal compliance and enforcement activities for HIPAA are complaint-driven and complaint-based. Enforcement efforts are focused on investigating complaints to determine if a covered entity is in compliance.

Comment: We received a few comments recommending that HHS increase its enforcement efforts related to HIPAA transactions to ensure that health plans are adhering to the requirements of the X12 transactions. We received another comment suggesting stronger enforcement of the adoption of all of the standard transactions by all covered entities. One commenter said that, to date, only a subset of HIPAA-mandated transaction standards that facilitate EDI have been

implemented as required, which significantly decreases the benefits of standardization to the industry.

Response: Our complaint-driven enforcement process has been successful in obtaining compliance on a case-by-case basis, and we encourage covered entities to utilize the process. We understand that some of the standards have not been implemented because of their limited usefulness, or because of issues with implementation. We believe that, because the standards have been significantly improved, the standards we adopt here are more useful, and therefore will result in greater industry implementation. We have the authority to conduct compliance reviews at our discretion to evaluate compliance with any of the HIPAA requirements, and have done so already with respect to the security standards. We plan to expand our compliance review program in the future to include random reviews of compliance with the transaction standards as well.

Certification

Comment: We received several comments suggesting that HHS consider petitioning the Certification Commission for Healthcare Information Technology (CCHIT) to include Versions 5010 or D.0 in all products that would be expected to carry the upgraded standards in order to facilitate compliance with the final rule. Commenters believe this will be especially important for small covered entities in the process of purchasing software until the compliance date. They believe that, if purchasers are aware of the need to buy products that are certified to meet the incoming HIPAA requirements, conversion might be smoother and less expensive.

Response: Generally, CCHIT does not certify products for administrative transactions, and therefore we will not pursue this suggestion. Furthermore, HHS does not recognize certification of any systems or software for purposes of HIPAA compliance.

H. Comments Considered Out of Scope

We received a number of comments on subjects that were outside the scope of the proposed rule. We do not directly respond to those types of comments because we consider them to be outside the scope of this rule, but we wish to acknowledge them. We have summarized them in the following list:

- One commenter stated the final rule should clarify the relationship between HIPAA and the Family Educational Rights and Privacy Act (FERPA). The commenter stated that there are entities that are bound by both HIPAA and FERPA, and suggested that clarification is needed for situations where there are inconsistencies between the two laws.
- One commenter stated that HHS should agree to accept and utilize all diagnosis codes associated with an admission or an encounter, not just those accommodated within the limits first set by paper forms. The current practice of truncating numbers for diagnoses and procedures so that they are equal to what a paper claim supports causes problems for providers when they are trying to meet the ''Present on Admission'' (POA) requirement of providing adequate information about a patient's condition.
- One commenter recommended that HHS add a definition for real-time adjudication with regard to the 837 claim, 835 remittance advice and the 277 health care claim status transactions in this final rule. The commenter referenced the collaborative efforts between WEDI and X12 to provide a standard way to conduct real-time adjudication.
- One commenter requested that we address expectations related to § 162.925 regarding health plan incentives to health care providers for using direct data entry (DDE) transactions. The commenter said there are instances where health plans offer more information about eligibility and benefit information on Web sites than they do through the standard X12 270/271 transactions, which the commenter believes is an incentive for a provider to conduct a transaction using some means other than the standard transaction. The commenter requested clarification regarding the offer of more information through a non-standard transaction than in the standard transaction, even though the standard transaction contains the required amount of information. Since we did not address this issue in the proposed rule, we do not respond here, but may provide additional direction in a future Frequently Asked Question on the CMS Web site.

III. Provisions of the Final Rule

This final rule incorporates the provisions of the proposed rule, with the following exceptions and changes: We proposed to adopt a compliance date for Versions 5010 and D.0 of April 1, 2010 for all covered entities. In this final rule, we adopt a compliance date of January 1, 2012 for Versions 5010 and D.0 for all covered entities. We revise § 162.1102, § 162.1202, § 162.1302, § 162.1402, § 162.1502, § 162.1602, § 162.1702, and § 162.1802 accordingly.

We proposed a compliance date of 24 months after the effective date of the final rule for the Medicaid pharmacy subrogation standard (Version 3.0) with an additional 12 months for small health plans. In this final rule, we indicate an effective date of January 1, 2010 for the provisions of 45 CFR Subpart S. This means that covered entities other than small health plans must be in compliance on January 1, 2012, while small health plans, which have an additional 12 months, must be in compliance on January 1, 2013.

In § 162.925, we add paragraph (a)(6) that precludes health plans from requiring an earlier compliance date than those adopted. Use of Versions 5010 and D.0 in advance of the mandatory compliance date is permissible, based upon mutual agreement by trading partners.

We adopt revisions to § 162.1102, § 162.1202, § 162.1302, § 162.1402, § 162.1502, § 162.1602, § 162.1702, and § 162.1802 to enable covered entities to engage in Level 2 testing by allowing for the use of both the old standard and the updated standard.

We allow covered entities to use either Version 4010/4010A, 5010, 5.1 or D.0 for billing retail pharmacy supplies and services, and reflect that policy in revisions to § 162.1102. We also revise the definition of ''standard transaction'' in accordance with our policy to allow for the dual use of standards, by replacing ''the applicable standard'' with ''an applicable standard'' at § 162.103

We proposed to clarify the descriptions for three standards: Enrollment and disenrollment, referral certification and authorization, and health care claims status and request. In the final rule we do so, by specifying the senders and receivers of those transactions in § 162.1301, § 162.1401 and § 162.1501.

In the proposed rule, at § 162.900, we stated that ASC X12N implementation specifications and the ASCX12 Standard for Electronic Data interchange Technical Report Type 3 were available from the Washington Publishing Company. In the final rule, we provide the correct address and Web site for obtaining the Version 5010 guides, from X12. Version 4010/4010A specifications may still be obtained from the Washington Publishing Company.

IV. Collection of Information Requirements

Under the Paperwork Reduction Act of 1995, we are required to provide 30-day notice in the **Federal Register** and solicit public comment before a collection of information requirement is submitted to the Office of Management and Budget (OMB) for review and

approval. In order to fairly evaluate whether an information collection should be approved by OMB, section 350(c)(2)(A) of the Paperwork Reduction Act of 1995 requires that we solicit comment on the following issues:

- The need for the information collection and its usefulness in carrying out the proper functions of our agency.
- The accuracy of our estimate of the information collection burden.
- The quality, utility, and clarity of the information to be collected.
- Recommendations to minimize the information collection burden on the affected public, including automated collection techniques.

In this rule, we are finalizing the revisions to the information collection requirements that were announced in the proposed rule that was published on August 22, 2008 (73 FR 49742). Specifically, we are revising the currently approved information collection requirements contained in § 162.1102, § 162.1202, § 162.1301, § 162.1302, § 162.1401, § 162.1402, § 162.1501, § 162.1502, § 162.1602, § 162.1702, and § 162.1802 of this document. We believe that the revisions will have an impact on the burden (both hour burden and cost burden) associated with the aforementioned affected sections that are currently approved under OCN 0938–0866 with an expiration date of 7/31/2011. In addition to announcing the revisions in the proposed rule, we published a 60-day **Federal Register** notice on October 10, 2008 (73 FR 60296) that solicited public comments on the proposed revisions. No comments were received. Accordingly, we have submitted a revised information collection request to OMB for its review and approval of the revised information collection requirements. These requirements are not effective until approved by OMB.

If you wish to comment on these information collection and recordkeeping requirements, please fax your comments to 202–395–6974 or email your comments to *oira_submission@omb.eop.gov*. Please mark comments to the attention of the desk officer for CMS and indicate that they are in relation to OMB control number 0938–0866.

V. Regulatory Impact Analysis

A. Overall Impact

We have examined the impacts of this rule as required by Executive Order 12866 (September 1993, Regulatory Planning and Review), as amended by Executive Order 13258 (February 26, 2002) and further amended by Executive Order 13422 (January 18, 2007), the Regulatory Flexibility Act (RFA) (September 19, 1980, Pub. L. 96–354), section 1102(b) of the Social Security Act, the Unfunded Mandates Reform Act of 1995 (Pub. L. 104–4), Executive Order 13132 on Federalism, and the Congressional Review Act (5 U.S.C. 804(2)).

Executive Order 12866 (as further amended) directs agencies to assess all costs and benefits of available regulatory alternatives and, if regulation is necessary, to select regulatory approaches that maximize net benefits (including potential economic, environmental, public health and safety effects, distributive impacts, and equity). A regulatory impact analysis (RIA) must be prepared for major rules with economically significant effects ($100 million or more in any 1 year). Because we estimate that this rule will have economically significant effects, we prepared an RIA. We anticipate that the adoption of the new versions of the standards and the adoption of Version 3.0 would result in benefits that will outweigh the costs. Accordingly, we prepared a Regulatory Impact Analysis in the August 22, 2008 proposed rule that, to the best of our ability, presented the costs and benefits of the proposals. We did not receive any comments on the Regulatory Flexibility Analysis, and therefore provide a summary here. For details, we refer readers to the August 22, 2008 proposed rule at 73 FR 49757.

B. Regulatory Flexibility Analysis

The Regulatory Flexibility Act (RFA) of 1980, Public Law 96–354, requires agencies to describe and analyze the impact of the rule on small entities unless the Secretary can certify that the regulation will not have a significant impact on a substantial number of small entities. In the health care sector, a small entity is one with between $6.5 million and $31.5 million in annual revenues or is a nonprofit organization. For the purposes of this analysis (pursuant to the RFA), nonprofit organizations are considered small entities; however, individuals and States are not included in the definition of a small entity. We attempted to estimate the number of small entities and provided a general discussion of the effects of the proposed regulation, and where we had difficulty, or were unable to find information, we solicited industry comment. We stated our belief that the conversion to Versions 5010 and D.0 would have an impact on virtually every health care entity. We did not receive any comments in response to our solicitation for comments.

In our analysis, we combined Versions 5010 and D.0 because these two standards will be implemented at the same time, and in some cases are dependent on each other. We provided examples in the August 22, 2008 proposed rule (73 FR 49758).

The summary table in this final rule includes the final cost estimates for Versions 5010, D.0 and 3.0 on all entities we anticipated would be affected by the rule. The data in that table were used in this analysis to provide cost information.

Because most health care providers are either nonprofit or meet the Small Business Administration's (SBA) size standard for small business, we treated all health care providers as small entities. For providers, we predicted that the changes would be minimal involving software upgrades for practice management and billing systems. We included pharmacies in the analysis, and considered some of them to be small businesses. We considered some health plans small businesses, but were unable to identify data for these entities, nor was any information submitted in response to our solicitation. We addressed clearinghouses and Pharmacy Benefit Managers (PBMs) in our discussion, though we did not believe that there were a significant number of clearinghouses that would be considered small entities. This was confirmed by a number of associations, including the Maryland Commission for Health Care. PBMs were excluded from the analysis because we had no data to indicate that they would qualify as a small entity. State Medicaid agencies were excluded from the analysis because States are not considered small entities in any Regulatory Flexibility Analysis.

Final Regulatory Flexibility Analysis (FRFA)

1. Number of Small Entities

In total, we estimated that there are more than 300,000 health care organizations that may be considered small entities either because of their nonprofit status or because of their revenues. The Business Census data shows that there are 4,786 firms considered as health plans and/or payers (NAICS code 5415) responsible for conducting transactions with health care providers. In the proposed rule's impact analysis, we used a smaller figure based on a report from AHIP. But for purposes of the RFA, we did not identify a subset of small plans, and instead solicited industry comment as to the percentage of plans that would be considered small entities. We identified

the top 78 clearinghouses/vendors in the Faulkner and Gray health data directory from 2000—the last year this document was produced. Health care clearinghouses provide transaction processing and translation services to both providers and health plans.

We identified nearly 60,000 pharmacies, using the National Association of Chain Drug Stores Industry Profile (2007) (*http://www.nacds.org*), and for the purposes of the initial regulatory flexibility analysis we are treating all independent pharmacies reported in the Industry Profile as ''small entities.'' The number of independent pharmacies reported for 2006 is approximately 17,000 entities. We specifically invited comments on the number of small pharmacies, but received none.

Based on Figure 2 of the Industry Profile, independent pharmacy prescription drug sales accounted for 17.4 percent of total pharmacy drug sales of $249 billion sales for 2006. Allocating the Versions 5010 and D.0 costs based on the share of prescription drug revenues to independent pharmacies (the small businesses), implementation costs are expected to range between $6.4 million and $13 million or 0.02 and 0.03 percent of revenues. These figures indicate that there is minimal impact, and the effect falls well below the HHS threshold of 3 to 5 percent specified in the HHS guidance on treatment of small entities (*see*: ''Guidance on Proper Consideration of Small Entities in Rulemakings of the U.S. Department of Health and Human Services'' *http://www.hhs.gov/execsec/smallbus.pdf.pdf*).

2. Costs for Small Entities

To determine the impact on health care providers we used Business Census data on the number of establishments for hospitals and firms for the classes of providers and revenue data reported in the Survey of Annual Services for each NAICS code. For other providers, we assumed that the costs to implement Version 5010 would be accounted for at the level of firms rather than at the individual establishments. Since we treated all health care providers as small entities for the purpose of the initial regulatory flexibility analysis, we allocated 100 percent of the implementation costs reported in the impact analysis for provider type. Table 2 shows the impact of the Version 5010 implementation costs as a percent of the provider revenues. For example, dentists, with reported 2005 revenues of $87.4 billion and costs ranging from $299 million to $598 million have the largest impact on their revenues of between 0.11 percent and 0.21 percent. We solicited comments specifically on the number of providers affected by the proposed rule, but received none.

We did not include an analysis of the impact on small health plans, because we were not able to determine the number of plans that meet the SBA size standard of $6.5 million in annual receipts.

In evaluating whether there were any clearinghouses that could be considered small entities, we consulted with three national associations (EHNAC, HIMSS and the Cooperative Exchange), as well as the Maryland Commission for Health Care, and determined that the number of clearinghouses that would be considered small entities was negligible. We identified the top 78 clearinghouses, and determined that they are typically part of large electronic health networks, such as Siemens, RxHub, Availity, GE Healthcare etc., none of which fit into the category of small entity. As referenced earlier, in a report by Faulkner and Gray in 2000, the top 51 entities were listed, and the range of monthly transactions was 2,500 to 4 million, with transaction fees of $0.25 per transaction to $2.50 per transaction. We determined that even based on these data, few of the entities would fall into the small entity category, and we did not count them in the analysis.

With respect to Version 3.0, we point out that, while we do not know how many health plans/payers will exchange the pharmacy subrogation standard with Medicaid agencies, those entities would be counted in the health plan category and addressed under the analysis for Versions 5010 and D.0. We did not provide a separate analysis in this section.

In sum, we assumed that the financial burden would be equal to or less than three percent of revenues. Based on the results of this analysis, we remain reasonably confident that the rule will not have a significant impact on a substantial number of small entities. As stated throughout this section, in spite of our request for comments on this analysis, we received none.

Table 2 below summarizes the impact of the rule on the health care industry.

TABLE 2—ANALYSIS OF IMPLEMENTATION OF THE BURDEN OF VERSIONS 5010, D.0 AND 3.0 ON SMALL COVERED ENTITIES

NAICS	Entities	Total no. of entities	Small entities	Revenue or receipts ($ millions)	% Small entity receipts of total receipts	Version 5010/D.0 annual costs (in millions)	Small entity share of version 5010/D.0 costs (in millions $)	% Implementation cost revenue-receipts (costs/receipts)
6221	General Acute Care Hospitals (establishments)	5,386	5,386	612,245	100	292–583	.....	.05–.10
6211	Physicians (firms)	189,562	189,562	330,889	100	136–272	.....	.04–.08
6212	Dentists (firms)	118,163	118,163	87,405	100	94–187	.....	.11–.21
44611	Pharmacies (includes 5010 and D.0)	56,946	17,482	249,000 (42,330 @ 17%)	17.4	37–75	6.4–13	.02–.03

In column 1 we display the NAICS code for class of entity. Column 3 shows the number of entities that are reported in the Business Census for 2006 or ''Chain Pharmacy Industry Profile.''

Column 4 shows the number of small entities that were computed based on the Business Census and Survey of Annual Service when the data was available. All health care providers were assumed to be small. We assumed that all independent pharmacies reported in Table 2 of the Industry profile are small entities.

Column 5 shows revenues that were reported for 2005 in the Survey of Annual Services, or in the case of pharmacies, in Figure 2 of the Industry profile. In the case of health plans and third party administrators, we used the consumer payments reported for private health insurance in 2006 in the National Health Expenditure accounts.

Column 6 shows the percent of small entity revenues.

Column 7 shows the implementation costs for Versions 5010, D.0 and 3.0

taken from Table 14a of the impact analysis and annualized.

Column 8 shows the costs allocated to the small entities based on the percent of small entity revenues to total revenues.

Column 9 presents the percent of the small entity share of implementation costs as a percent of the small entity revenues. As stated in the guidance cited earlier in this section, HHS has established a baseline threshold of 3 percent of revenues that would be considered a significant economic impact on affected entities. None of the entities exceeded or came close to this threshold.

We note that the impact in our scenarios is consistently under the estimated impact of 3 percent for all of the entities listed above, which is below the threshold the Department considers as a significant economic impact. As expressed in the Department guidance on conducting regulatory flexibility analyses, the threshold for an economic impact to be considered significant is 3 percent to 5 percent of either receipts or costs. As is clear from the analysis, the impact does not come close to the threshold. Thus, based on the foregoing analysis, we conclude that some health care providers may encounter significant burdens in the course of converting to the modified Versions 5010 and D.0. However, we are of the opinion that, for most providers, health plans, and clearinghouses the costs will not be significant.

3. Alternatives Considered

As stated in the August 22, 2008 proposed rule, we considered various policy alternatives to adopting Versions 5010, D.0 and 3.0, including not adopting the modifications, using staggered implementation schedules, allowing implementation delays for small entities, and waiting to adopt a later version of the X12 and/or NCPDP standards. We rejected all of these alternatives, resulting in the adoption of the standards, as proposed, with an alternate compliance date.

4. Conclusion

As stated in the HHS guidance cited earlier in this section, HHS uses a baseline threshold of 3 percent of revenues to determine if a rule would have a significant economic impact on affected entities. None of the entities exceeded or came close to this threshold. Based on the foregoing analysis, the Secretary certifies that this final rule will not have a significant economic impact on a substantial number of small entities.

Section 1102(b) of the Act requires us to prepare a regulatory impact analysis if a rule would have a significant impact on the operations of a substantial number of small rural hospitals. This analysis must conform to the provisions of section 603 of the RFA. For purposes of section 1102(b) of the Act, we define a small rural hospital as a hospital that is located outside of a metropolitan statistical area and has fewer than 100 beds. This final rule will affect the operations of a substantial number of small rural hospitals because they are considered covered entities under HIPAA, however, we do not believe the rule will have a significant impact on those entities, for the reasons stated above in reference to small entities. Therefore, the Secretary has determined that this final rule will not have a significant impact on the operations of a substantial number of small rural hospitals.

Section 202 of the Unfunded Mandates Reform Act of 1995 (UMRA) also requires that agencies assess anticipated costs and benefits before issuing any rule whose mandates would require spending, in any 1 year, $100 million in 1995 dollars, updated annually for inflation. In 2008, that threshold is approximately $130 million. This final rule contains mandates that will impose spending costs on State, local, or tribal governments in the aggregate, or by the private sector, in excess of the current threshold. The impact analysis in the proposed rule addressed those impacts both qualitatively and quantitatively. In general, each State Medicaid Agency and other government entity that is considered a covered entity will be required to invest in software, testing and training to accommodate the adoption of the updated versions of the standards, and Version 3.0. UMRA does not address the total cost of a rule. Rather, it focuses on certain categories of cost, mainly those ''Federal mandate'' costs resulting from (A) imposing enforceable duties on State, local, or tribal governments, or on the private sector, or (B) increasing the stringency of conditions in, or decreasing the funding of, State, local, or tribal governments under entitlement programs.

Executive Order 13132 establishes certain requirements that an agency must meet when it promulgates a proposed rule (and subsequent final rule) that imposes substantial direct requirement costs on State and local governments, preempts State law, or otherwise has Federalism implications. This final rule will have a substantial direct effect on State or local governments, could preempt State law, or otherwise have a Federalism implication because, even though State Medicaid agencies will be converting to a modified version of an existing standard (Version 4010/4010A to Version 5010 and NCPCP 5.1 to NCPDP D.0) with which they are familiar, there are expenses for implementation and widescale testing. State Medicaid agencies are currently required to conduct pharmacy subrogation, and in accordance with this final rule, will be able either to use the new Medicaid pharmacy subrogation transaction standard or contract with trading partners and/or contractors who specialize in this field to fulfill its subrogation requirement. With respect to subrogation for pharmacy claims, we note that this final rule does not add a new business requirement for States, but rather mandates a standard to use for this purpose which will be used consistently by all States. There will also be expenditures for States as they convert from Version 5.1 to D.0 for other pharmacy transactions, and this transition will have implementation and testing costs as well, meaning there will be additional fiscal impacts on States based on this rule.

C. Anticipated Effects

The objective of this regulatory impact analysis was to summarize the costs and benefits of the following proposals:

- Migrating from Version 4010/4010A to Version 5010 in the context of the current health care environment;
- Migrating from Version 5.1 to Version D.0; and
- Adopting a new standard for the Medicaid subrogation transaction.

The following are the key issues that we believe necessitate the adoption of these modified standards and of a standard for Medicaid pharmacy subrogation:

- The current X12 and NCPDP standards were adopted in 2000 and do not reflect the numerous business changes that have emerged during that time.
- The current standards do not accommodate the use of ICD–10 codes.
- The standard for Medicaid pharmacy subrogation will significantly improve the efficiency of this process.

The remainder of this section provides details supporting the cost benefit analysis for each of the three above-referenced proposals.

In the August 22, 2008 proposed rule (73 FR 49761), we described the research conducted for us by Gartner, Incorporated (Gartner) to assess the costs and benefits associated with the

adoption of Version 5010. Details about Gartner's methodology were provided in the August 22, 2008 proposed rule, and a summary of the calculations and methodology is available on the CMS Web site at: *http://www.cms.hhs.gov/TransactionCodeSetsStands/Downloads/5010RegulatoryImpactAnalysisSupplement.pdf.*

In this section of the final rule, we summarize the key assumptions from the August 22, 2008 proposed rule, and discuss those with which commenters did not agree. In cases where we agreed with commenters, and changed our assumptions, we provide both the original and revised amounts, unadjusted for present value. The last section of the impact analysis contains the summary detailed tables with all of the costs and benefits recalculated to reflect the changes to the estimates for each of the standards and adjusted for present value. The analysis contained herein is presented at a high level. For a complete description of the analysis, see the Economic Impact Analysis in the docket of this final rule.

Additionally, although many commenters mentioned that we underestimated the costs, or overestimated the benefits of transitioning to the new versions, no substantive data or additional information was provided to counter our analysis, and therefore, though some changes have been made, they are not substantial, particularly for the benefits that are detailed in this final rule. However, based on the information we did receive, there are three items that changed, which affected some of the figures in the impact analysis: (1) The cost estimate was increased from between 20 percent and 40 percent of the Version 4010/4010A costs to between 25 percent and 50 percent; (2) the salary for provider billing specialist was reduced from $60 thousand per year to $50 thousand per year; (3) the timing for adoption of the auxiliary standards was changed to begin in calendar year 2013 instead of calendar year 2012; These three items represent cost and benefit changes that are reflected in this revised impact analysis, and we have updated the tables for each industry sector accordingly. One of the benefit categories, Cost savings or savings due to new users of claims standards, is not impacted by the aforementioned items. We do not repeat this entire explanation in each section, but rather refer the reader back to this introduction.

As noted in the preamble, the compliance date for Version 5010 has been changed to January 1, 2012, and the cost allocations have been updated in accordance with the new timeline. We assumed transition costs would occur in the fourth year of implementation (monitoring, maintaining, and adjusting the upgraded systems and related processes) and continue until all parties reach a ''steady state.''

While significant efforts were taken to ensure that the cost and benefits captured for this rule were accurate, there are a few key uncertainty factors that should be considered in reviewing the regulatory impact analysis:

- As detailed in the next section (Assumptions for Version 5010 Impact Analysis), the primary driver for all of the cost estimates was the expected range of costs for all covered entities relative to those same costs for implementation and transition to Version 4010.
- As detailed in the next section (Assumptions for Version 5010 Impact Analysis), one of the key drivers for all of the benefit estimates was increased use in electronic transactions. In all cases, HHS evaluated the industry feedback and used the conservative estimates for expected uptake in the electronic transactions so as to not inflate the benefits.
- As explained in the section on Version D.0, there is uncertainty as to the complexity and the number of systems that will be affected, and industry experts made their best estimates on the possible impacts to their constituents.

Assumptions for Version 5010 Impact Analysis

In calculating the costs and benefits, Gartner made a number of assumptions, based on interview data and secondary research. We outlined the key assumptions used to support Version 5010 impact analysis in the August 22, 2008 proposed rule (73 FR 49762).

Gartner projected the annual increase in the number of claims at four percent, and used these figures to calculate the provider benefits. We outlined annual claim volume projections in the August 22, 2008 proposed rule (73 FR 49762), and did not receive any comments on those figures.

Gartner estimated the current adoption rate for each of the HIPAA standards, and the projected rate of adoption for each of the modified versions of the standards over the planning horizon. We outlined those rates in the August 22, 2008 proposed rule (73 FR 49763). These figures were used to calculate the benefits for healthcare industry.

Comment: We received a few comments disagreeing with our assumptions about the increased use of auxiliary transactions. They stated that there will not be an automatic increase in the usage/volume of the auxiliary transactions, because the industry is still establishing a clear business need for these less widely used transactions (which are required for plans, but voluntary for providers). Auxiliary transactions are those that supplement or support claims information, including eligibility, enrollment and disenrollment, referral requests and authorizations and premium payments. Commenters also stated that, because these transactions were not useful in Version 4010/4010A, there is still some hesitancy to use Version 5010 until the transactions can be evaluated. Because efforts will be focused on implementing the claims and eligibility transactions for Version 5010, commenters stated that it may take industry longer to schedule testing for the auxiliary transactions.

Response: Gartner conducted additional discussions with industry experts regarding the original assumptions in the August 22, 2008 proposed rule. These experts acknowledged that providers that do not now use these transactions will be focusing all their initial efforts on implementing the key claims transactions—claims and remittance advice—and that they would likely focus on implementing the auxiliary transactions later. Accordingly, we changed the benefits realization assumption for auxiliary transactions to start in year 2013 instead of 2012. We do not agree with the few commenters who stated there would be no increase in the use of auxiliary transactions. In fact, the Gartner interviewees did not veer from their original statements that the auxiliary transactions would be used by more providers, albeit after initial implementation of the core transactions for claims and remittance advice. An association for physicians, in its comments, stated that these transactions would be increasingly used because of the improvements in the standards themselves and increased streamlining of various administrative processes.

The total benefits (low) across the industry declined from $18,635 million to $15,896 million.

Comment: We received a comment from a government health program stating that it did not agree with our savings/benefits assumption of reduced phone calls. The commenter explained that the salary savings/benefit has historically been found to be false savings unless personnel positions were actually eliminated.

Response: We disagree with the comment. Although personnel positions may not be eliminated, these personnel can be assigned to other tasks; in this case, the benefit is cost avoidance. Our estimates are based on cost avoidance, not personnel reductions.

General Assumptions for the Cost-Benefit Analysis for Providers and Health Plans

We outlined the key assumptions used to develop the cost benefit analysis for each of the provider segments—hospitals, physicians, pharmacies, and dentists as well as the health plans in the August 22, 2008 proposed rule (73 FR 49763).

Explanation of Cost Calculations

To determine the costs for each subsegment (that is, providers and health plans), we established an estimate for what the total approximate Version 4010/4010A costs were for an individual entity within that subsegment (based on the interviews and other data available through research—*see* 73 FR 49761) and then applied an estimated range of 20 to 40 percent of those costs to come up with estimated low and high costs for Version 5010. Additional information about the cost calculations and Gartner methodology are available in our supplemental document on the CMS Web site at: *http://www.cms.hhs.gov/TransactionCodeSetsStands/Downloads/5010RegulatoryImpactAnalysisSupplement.pdf.*

Comment: As stated above, a number of commenters disagreed with our assumptions concerning the level of effort necessary to migrate to Version 5010, in comparison with the initial implementation costs for Version 4010/4010A, and believed the costs to be significantly higher than our projections. Although no commenters actually provided a cost figure, a small number of commenters wrote that it would take 50 to 75 percent of the initial implementation effort to migrate to the new versions. The rationale provided was that:

(1) Organizations will have to operate dual systems through both testing and implementation phases as different trading partners migrate at different times.

(2) Additional considerations in the salary cost assumptions such as real estate, utilities, phone, computer systems, infrastructure, etc., to represent total cost of employee should be taken into consideration.

Other commenters supported our assumptions regarding costs of operating dual systems through both testing and implementation phases. These commenters explained that there may be additional hardware costs to upgrade existing equipment to manage the dual use period, or enhanced functionality necessary when upgrading to new versions of software ready to handle the new versions. Another commenter disagreed with our statement that little or no transmission costs would be required to comply with the new regulation. The commenter said that new transmission costs will be created with new trading partners and new or increased number of transactions. Another commenter stated that, while there would be a number of one-time costs to implement Version 5010 (for business flow changes, software procurement or customized software development, etc.), they did not agree that the system testing costs would account for 60 to 70 percent of all costs, but did not provide any additional detail for their dissension. In sum, while we received a variety of comments, none provided specific cost or implementation data to support their statements.

Response: We agree that the industry will need to operate dual systems to process both versions of the standards, and that transmission costs will increase. The implementation of Version 4010/4010A required extensive remediation of applications; development of external support capability to deal with expanded code lengths; different handling of coordination of benefits; and a variety of other business changes. It further involved the first implementation of X12 transaction formats for many providers, health plans and clearinghouses. In addition, many providers switched from paper to electronic transmission concurrent with this change. The changes going from Version 4010/4010A to Version 5010 are far less extensive on the whole, even though there are a host of content and format changes. While we acknowledge the need to support both formats, the time spent dealing with errors and reworking business flows should not be nearly as great as the experience of implementing Version 4010/4010A. This difference in the scope of the changes between implementation of Version 4010/4010A and Version 5010 was one of the key bases for the original estimates that we obtained when surveying industry segments in preparing the August 22, 2008 proposed rule.

With regard to the comments regarding dual hardware, many transaction mapping products are capable of supporting more than one variant of the transaction format using the same hardware and communications channels. Although some additional transaction volume will be required for testing and parallel operations, HHS has concluded that there will be an incremental need for added hardware and communications capacity to support submitting all transactions in both formats during the conversion period.

With regard to the comment regarding additional salary cost assumptions, all cost estimates provided in the analysis presented in the proposed rule (73 FR 49762) included the full set of overhead and added personnel costs including real estate, utilities, phone, computer systems, infrastructure, etc. These items are considered to be part of the fully loaded costs to implement and maintain the Version 5010 transactions and would also be considered to be costs avoided in the benefit period once all parties have implemented the new version.

While most commenters did not provide specific data regarding additional costs, we nonetheless acknowledge that commenters generally believed our estimates to be too low, and did note specific areas of concern. Accounting for all of the new cost considerations, we have adjusted our assumption to a range of 25 to 50 percent of the Version 4010/4010A implementation costs to move to Version 5010. The total costs (low estimate) incurred by the whole industry increased from $5,656 million to $7,717 million, unadjusted for present value.

In the August 22, 2008 proposed rule (73 FR 49764), we show Gartner's estimates of the percent of the total costs allocated to each cost category (for example, testing and training) for the provider and plan segments. As discussed above, we used industry comments to revise the estimates for hardware and transmission costs. Table 3 reflects the new allocations of the percent of the total costs to each cost category.

TABLE 3—PERCENTAGE AND TOTAL AMOUNTS FOR COST ITEMS USED FOR VERSION 5010 CALCULATIONS—PROVIDERS AND HEALTH PLANS

Cost item	Percent of total costs	
	Providers (percent)	Health plans (percent)
Hardware Procurement	10	10
Software Costs	10	7.5
Transmission Costs	2.5	2.5
New Data Collection	0	0
Customized software development	5	2.5
Testing Cost	60	65
Training Costs	2.5	2.5
Transition Costs	10	10
Totals	100	100

Original source: Gartner interviews and secondary research.

Explanation of Benefits and Savings Calculations

In our analysis, we assumed that benefits would accrue in three categories which were described and explained in detail in the August 22, 2008 proposed rule (73 FR 49764). For ease of reference, they were labeled: (1) *Better standards* or savings due to improved claims standards; (2) *Cost savings* or savings due to new users of claims standards; and (3) *Operational savings* or savings due to increased auxiliary standards usage.

For ease of reference, we repeat the explanation of the three savings categories:

(1) Better standards or savings due to improved claims standards: The improvements in Version 5010 that would reduce manual intervention to resolve issues related to the claim or remittance advice, due to ambiguity in the standards;

(2) Cost savings or savings due to new users of claims standards: Increased use of electronic transactions for claims and remittance advice that would accrue to parties who had previously avoided the electronic transactions because of their deficits and shortcomings; and

(3) Operational savings or savings due to increased auxiliary standards usage: Increase use of auxiliary transactions through EDI that would result from a decrease in manual intervention to resolve issues with the data (handled through phone calls or correspondence).

The August 22, 2008 proposed rule (73 FR 49765) details the business activities, such as manual interventions and phone calls, that make up the calculations for two of the categories of projected savings: *Better standards* or savings due to improved claims standards and *Operational savings* or savings due to increased auxiliary standards usage. As stated, only two of the three benefit categories are impacted by the revised assumptions.

Comment: We received one comment disagreeing with our assumption that provider billing specialist yearly costs are $60,000. The commenter stated that the billing specialist yearly cost, on average across the country, is not higher than $50,000.

Response: We agree with the comment after performing additional research regarding this assumption, and as a result, have changed our estimate regarding yearly costs for a provider billing specialist from $60,000 to $50,000. Based on this change, the total benefits (low estimate) across the industry declined from $18,635 million to $15,896 million, unadjusted for present value.

The benefits category, ''*Cost savings,* or savings due to new users of claims standards,'' does not change as a result of our revised calculations. The revised provider billing specialist salary assumption only affects the benefit calculations for benefit category, ''*Better standards* or savings due to improved claims standards'' and the revised benefits realization assumption for auxiliary transactions only changes the benefit calculation for benefits category, ''*Operational savings* or savings due to increased auxiliary standards usage''. However, the entire benefit projection changes because of the revised compliance date.

1. Health Care Providers

In the August 22, 2008 proposed rule (73 FR 49765), we reiterated that providers are not required by HIPAA to conduct HIPAA transactions electronically, but if they do, they must use the standards adopted by the Secretary. Providers that conduct these transactions electronically would be required to implement Version 5010 of those transactions.

Hospitals

In the August 22, 2008 proposed rule, we calculated that the total cost for all hospitals to implement Version 5010 would be within a range of $932 million to $1,864 million (73 FR 49767). Based on the revised cost assumptions outlined earlier (increased rate of 25 to 50 percent), the new estimate of total costs for all hospitals to implement Version 5010 will be within a range of $1,165 million to $2,331 million, unadjusted for present value.

Hospitals would realize savings and benefits in the same three categories we identified in the August 22, 2008 proposed rule (73 FR 49766). In the proposed rule, we calculated that the savings due to better standards were estimated to be a low of $403 million. Cost savings due to an increase in use of the electronic claims transactions (837 and 835) were estimated at a low of $66 million. Operational savings due to an increase in the use of auxiliary transactions were estimated at $1,314 million.

Based on the revised benefit assumptions outlined earlier, the new estimate for minimum savings due to better standards is $348 million and operational savings due to increase in the use of auxiliary claim transactions are $1,132 million, unadjusted for present value. The cost savings benefit category is not impacted by the revised benefit assumptions.

Physicians and Other Providers

We outlined the key assumptions used to develop the cost benefit analysis for physicians and other providers segment in the August 22, 2008 proposed rule (73 FR 49767), and calculated that the total cost for all physicians and other providers segment to implement Version 5010 would be within a range of $435 million to $870 million. Based on the revised cost

assumption outlined earlier, the new estimate of total cost for physicians and other providers segment to implement Version 5010 is between $544 million to $1,088 million, unadjusted for present value.

In the proposed rule, we calculated that the savings due to better standards was estimated to be a low of $1,612 million. Cost savings due to an increase in use of the electronic claims transactions (837 and 835) were estimated at a low of $270 million. Operational savings due to an increase in the use of auxiliary transactions were estimated at $5,251 million.

Based on the revised benefit assumptions outlined earlier (change in salary and later adoption of auxiliary transactions), the new estimate for physician savings due to better standards is $1,392 million and operational savings due to increase in the use of auxiliary claim transactions are $4,443 million, unadjusted for present value. As mentioned earlier, the benefit category cost savings is not impacted by the revised benefit assumptions.

Dentists

In the August 22, 2008 proposed rule, we acknowledged that the dental community has not yet widely adopted the HIPAA standards, in large part because the standards did not meet their practical business needs, particularly for claims and remittance advice. We assumed that the costs for implementing Version 5010 would largely fall on vendors as a cost of doing business, as they support the majority of dentists. We outlined the key assumptions used to develop the cost benefit analysis for dentists segment in the August 22, 2008 proposed rule (73 FR 49768). We received a few general comments from the dental community regarding our estimates of the dental profession. We did not receive any actual cost data from any organization or practitioner.

Comment: We received one comment clarifying a figure in Table 18 in the supplement document posted on the CMS Web site in October 2008. The clarification is that the number of dentist practices (outlined in Table 18) does not include a one-to-one relationship between dentists and their office, so the calculation assumes too large a number. The commenter did not provide a figure however.

Response: We agree with the clarification and distinction, and have updated the table in the supplement to indicate the numbers were for individual dentists. However, in HHS's opinion, the current cost estimates are not overstated. We derived the cost per dentist based on input provided by the industry, which reflected office costs, in keeping with the other portions of the analysis.

Comment: We received one comment clarifying another data point—in Table 19 in the supplement document posted on the CMS Web site in October 2008. The clarification is that the size of most dental practices is less than 5. In Table 19, the practice size categories were too large (''50–100 physicians'' and ''100 + physicians,'') for dentistry, and should have reflected a smaller number at the lower end.

Response: We agree with the clarification, and have updated the table to represent the data collected from the industry. However, the calculation of the costs and benefits are not affected by this comment.

In the August 22, 2008 proposed rule (73 FR 49768), we calculated that the total cost for dentists to implement Version 5010 would be within a range of $299 million to $598 million. Based on revised cost assumption outlined earlier, the new revised estimate of total costs for the dentist segment to implement Version 5010 is within a range of $373 million to $747 million, unadjusted for present value.

Based on the revised benefit assumptions outlined earlier, the new estimate for savings due to better standards is $236 million and operational savings due to increase in the use of auxiliary claim transactions are $753 million, unadjusted for present value. As mentioned earlier, the benefit category cost savings is not impacted by the revised benefit assumptions.

Pharmacies

Pharmacies will transition to greater use of Version 5010 when the final rule becomes effective, specifically for the 835 transaction (remittance advice). For retail pharmacy claims, pharmacies primarily use the NCPDP standard, Version 5.1. Since we are replacing Version 5.1 with Version D.0 in this regulation, and many of the system changes, costs and benefits for implementing both Version 5010 and Version D.0 will result from related efforts, we combined the impact analysis for Version 5010 and Version D.0. That analysis is detailed later in this analysis.

Comment: We received a comment from a pharmacy chain that identified a pharmacy segment that was not considered in the regulatory impact analysis. The commenter stated that there are retail pharmacies that are not considered a chain store, and would not fall under the category of independent pharmacies. In addition, the commenter provided representative costs incurred by a typical retail pharmacy in this segment. This commenter said that the cost of implementation of both the standards (Versions D.0 and 5010) would be approximately $250,000, with 90 percent of the cost associated with the upgrade from Version 4010/4010A to Version 5010.

Response: Although the commenter had identified representative costs, it did not provide additional information regarding the number of retail chains that fall in this segment. We were, therefore, not able to re-model the impact analysis based on the additional information provided by the commenter. Furthermore, the impact analysis for pharmacies is handled in the section for Version D.0 and we believe those figures are representative of the segment overall.

Health Plans

In the August 22, 2008 proposed rule (73 FR 49769), we outlined the key assumptions used to develop the cost benefit analysis for the health plans segment. We calculated that the total cost for health plans to implement Version 5010 would be within a range of $3,604 million to $7,209 million. Based on the revised cost assumption outlined earlier, the new estimate of total cost for health plans to implement Version 5010 is to be within a range of $4,505 million to $9,011 million, unadjusted for present value.

In the August 22, 2008 proposed rule (73 FR 49769), we calculated that the savings due to better standards were estimated at a low of $1,283 million. Cost savings due to an increase in use of the electronic claims transactions (837 and 835) were estimated at a low of $111 million. Operational savings due to an increase in the use of auxiliary transactions were estimated at $4,386 million. We outlined the Version 5010 cost benefit summary for health plans segment (73 FR 49769).

Based on the revised benefit assumptions outlined earlier, the new estimate for savings due to better standards is $1,093 million, and operational savings due to increase in the use of auxiliary claim transactions are $3,711 million, unadjusted for present value. As mentioned earlier, the benefit category cost savings is not impacted by the revised benefit assumptions.

Government Plans

We outlined the key assumptions used to develop the cost benefit analysis for government plans segment in the August 22, 2008 proposed rule (73 FR 49770), and calculated that the total

costs for government plans segment to implement Version 5010 would be within a range of $252 million to $481 million. Based on the revised cost assumption outlined earlier, the new estimate of total costs for the government plans segment to implement Version 5010 is within a range of $314 million to $601 million, unadjusted for present value.

In the August 22, 2008 proposed rule, we estimated that savings due to better standards would be a low of $279 million. Cost savings due to an increase in use of the electronic claims transactions (837 and 835) were estimated to be a low of $24 million. Operational savings due to an increase in the use of auxiliary transactions were estimated at $953 million. We outlined the Version 5010 cost benefit summary for government plans segment (73 FR 49770).

Based on the revised benefit assumptions outlined earlier, the new estimate for savings due to better standards is $238 million and operational savings due to increase in the use of auxiliary claim transactions are $807 million, unadjusted for present value. As mentioned earlier, the benefit category cost savings is not impacted by the revised benefit assumptions.

Clearinghouses and Vendors

We outlined the key assumptions used to develop the cost benefit analysis for clearinghouses and vendors segment in the August 22, 2008 proposed rule (73 FR 49770), and calculated that the total costs for clearinghouses to implement Version 5010 would be within a range of $37 million to $45 million.

Comment: We received a comment from a large clearinghouse stating that our cost assumptions were significantly understated, and that their costs to implement Version 5010 would be at least $3.5 million, and would be affected specifically by the amount of testing that would be required with trading partners—both providers and health plans.

Response: We agree with the comment based on several additional interviews with large and medium clearinghouse representatives. In preparing the final rule, we did some additional analysis on a larger sample of the 162 clearinghouses that we included in our estimate. In this analysis we found that the cost per clearinghouse would be driven primarily by the number of trading partners with whom the clearinghouses would need to test Version 5010 transactions. The number varied greatly between the smaller clearinghouses and the larger ones and, therefore, created a range of costs for implementation and transition to Version 5010 based on this variable. Using this analysis, we increased our estimates and came up with an average implementation cost for each clearinghouse of $1 million (low) and $1.21 million (high) (up from a range of $0.23 million to $0.28 million). The total costs (low) for the clearinghouse segment increased from $37 million to $160 million.

Based on the comments, we revised our estimate of the total costs for the clearinghouse segment to implement Version 5010 to be within a range of $160 million to $196 million, unadjusted for present value.

In the August 22, 2008 proposed rule (73 FR 49771), we stated our assumption that there would be no benefits for clearinghouses. We did not receive any comments on this assumption, but feedback from industry interviews supports our belief that other than business stability, there are no other benefits for clearinghouses.

Other Comments Pertaining to Cost Estimates

Comment: We received a few comments requesting that HHS review the WEDI Cost Benefit Analysis (CBA) documents prepared in CY2007 and consider the industry projections of Version 5010 implementation costs from that analysis.

Response: We reviewed all of the CBA documents forwarded by WEDI. We were able to make some qualitative inferences based on the CBA survey responses and used those to solicit additional feedback from industry leaders regarding the CBA findings and to better augment the regulatory impact analysis. The input from this analysis helped inform the changes we have outlined in the final rule. However, we did not take the CBA estimates in their current form because:

- The CBA does not capture a breakdown of costs by healthcare sub segment but rather at the aggregate. Although the CBA summarizes the survey responses, it does not include analysis based on the survey responses. For example, the CBA captures the survey responses regarding participant details and the cost details. It does not tie the cost by survey participant as to establish a clear basis for comparison across organizations of similar size and type.
- It is difficult to develop Version 5010 costs based on the WEDI CBA because each analysis was conducted by transaction. For example, there are three analyses, one for each transaction: 835, 837 and 276/277. The costs outlined in the CBA have a high potential for overlap. In addition, participants are different for each survey. For example: 837 survey participants include four long term care health plans while 835 survey participants did not include any health plans.
- The survey results were not from a controlled sample. The depth of the survey respondent's understanding of the impact of Version 5010 was unclear. The lack of attribution and ability to contextualize survey responses makes it difficult to use the WEDI CBA directly; the utility of the data is extremely limited because of the small number of respondents, the uncertainty of the responses (over ⅓ of the payer, provider and vendor responders answered ''not sure'' when asked to estimate the costs for new software, upgrading of existing software, and custom solutions), and the lack of consistency of respondents across surveys.

As a result of these factors, this final rule is informed by the qualitative input from the WEDI CBA, but relies on the specific cost benefit study performed by Gartner to prepare the regulatory impact analysis for the August 22, 2008 proposed rule to adopt Version 5010.

Comment: One commenter stated that costs estimated to implement Version 5010 were 150 percent of the costs incurred during NPI implementation.

Response: We understand the context of the comment, although the commenter did not provide any data on which we could conduct any analysis or comparison. Since the commenter did not provide baseline data, a specific analysis could not be done to help us consider revising our cost estimates further.

Comment: We received a few comments requesting that HHS use the actual Version 4010/4010A implementation costs incurred by Medicare and Medicaid to estimate the truer costs to implement Version 5010.

Response: We acknowledge the comment, but do not provide a specific number for the Version 4010/4010A implementation costs incurred by Medicare and Medicaid. The budgetary process used by Medicare and Medicaid allocates funds for all approved Health Information Technology initiatives, and those estimates were used in our analysis, as was other data obtained from the industry at large. With respect to Medicare expenditures specifically, funds are allocated to the contractors for purposes of all updates and releases each year. Medicaid agencies do not report on a specific implementation, but rather track all system changes for purposes of federal cost sharing.

Comment: We received one comment requesting that HHS examine the costs for providers who must submit electronic information to HIPAA-exempt payers such as auto insurance, workers' compensation, property and casualty insurers who are not required to accept the HIPAA standard transactions. These providers must operate separate systems to support the requirements of covered and non-covered entities.

Response: This is consistent with current practice. These referenced entities have never been covered under HIPAA; there are already processes and systems being used to submit claims to different payer types. The commenter did not submit any data with respect to claims volumes or costs to help support the statement that these costs are unique and need to be examined.

Version D.0 (and Version 5010 for pharmacies)

In this section of the impact analysis, we summarize the key assumptions from the August 22, 2008 proposed rule, and discuss those with which the commenters disagreed. In cases where we agreed with the commenters and changed our estimates, revised tables are provided. In cases where we did not change our assumptions or estimates, the table from the August 22, 2008 proposed rule is not repeated. The last section of the impact analysis contains the summary detailed tables with all of the costs and benefits recalculated to reflect the changes. In general, pharmacy chains, health plans and PBMs believed that our cost estimates were too low, and provided modest justification for their position, but no entity provided actual data that could be used to adjust our estimates with precision. Based on the comments, we made some changes to our original assumptions and estimates for the cost of implementing Versions D.0 for pharmacy benefit managers.

As stated in the preamble, there was consensus that we should adopt Version D.0 to replace Version 5.1. No commenters disagreed with our estimates of the number of organizations and professionals affected by this rule, and there was also no disagreement about the estimate of more than 2.3 billion prescriptions annually.

Costs

a. Chain Pharmacies

The retail pharmacy industry would be the most impacted by the transition from Version 5.1. to Version D.0. In the August 22, 2008 proposed rule, we reported that one large national pharmacy chain estimated that it spent approximately $10 million when it converted to Version 5.1. In comparison, this chain estimated that corporate-wide costs for the conversion to Version D.0, including programming, system testing and personnel training, would be around $2 million per chain. Another large national pharmacy chain estimated its migration costs from Version 5.1 to Version D.0 would be $1.5 million. We solicited industry input in preparation for the proposed impact analysis, and the overall initial industry input for conversion to D.0 ranged from $100,000 for a small pharmacy chain to $1 million for large national pharmacy chains. Based on this information, we estimated implementation costs to be $20 million for large national pharmacy chains, and $18 million for small chains, for a total of $38 million.

Comment: We received a few comments disagreeing with our original cost estimates. One large chain estimated their cost at $4.9 million over two years but did not provide specifics. Another commenter estimated implementation costs of $2 million for small chains with costs increasing based on the size of the chain, but indicated that this estimate included both Version D.0 and Version 5010 costs.

Response: The few comments we received on this topic did not provide enough detail to permit us to assess them, and in one case the estimate did not distinguish between Version D.0 and Version 5010 costs. We retain our original estimates of $100,000 per small pharmacy chain and $1 million per large pharmacy chain company, unadjusted for present value. We estimate that these costs would be spread over the first two years of implementation of Version D.0.

b. Independent Pharmacies

In the August 22, 2008 proposed rule, we stated that independent pharmacies would incur costs resulting from software upgrades to accommodate Version D.0. We stated that we believed that maintenance fees would increase slightly, as vendors pass along their cost of the upgrade to the pharmacy. Based on industry input, we estimated that the average monthly maintenance contract between a pharmacy and a vendor amounts to a range of $400 to $800 per month per pharmacy with an additional percent for maintenance fee increases attributable to the conversion to Version D.0. Our original estimate per pharmacy was a range of $540,000 to $1,080,000 based on 18,000 independent pharmacies.

We did not receive any comments from any independent pharmacist or from any of their associations; therefore we stand by our original assumptions. We have modified the dates for those costs, in accordance with the revised compliance schedule.

c. Health Plans and PBMs

In the August 22, 2008 proposed rule (73 FR 49773), we stated that health plans should see minimal changes in their operations and workflows between Version 5.1 and Version D.0. We estimated the cost for large PBMs to migrate to Version D.0 to be approximately $1 million to $1.5 million per large national PBM, and approximately $100,000 for specialty PBMs. Our total estimated costs for health plans and PBMs ranged between $3.6 and $10.6 million per plan based on the size of the PBM.

Comment: We received a few comments suggesting that we understated the cost for health plans and PBMs to transition to Version D.0. While commenters agreed with our assessment of the consolidation of the PBM industry nationwide, they claimed that we did not account for the effect on a large PBM. Commenters explained that maintenance of multiple platforms results in increased complexities of operations and upgrades. One commenter estimated that costs for their upgrades would be $11 million, and, unlike the upgrades to the retail systems, they stated that few if any benefits will result from the costs.

Another commenter expanded on the cost issues, stating that the business requirements for commercial and Medicare Part D clients have required significant changes to the claim standard. They stated that the requirements affect all of the logic associated with the new fields which must be accommodated. They explained that even the customer service screens will require revision and that the representatives will require training on the new fields and the benefit changes so that they can answer beneficiaries' questions correctly. They estimate their total cost to be in excess of $10 million dollars.

Another commenter challenged our assumption that health plans and PBMs should see minimal changes in their operations and workflows between Version 5.1 and Version D.0., stating that Version D.0 requires additional data reporting related to the eligibility or subrogation/secondary plan aspects of the transaction, and that this represents a significant workload.

Response: When we prepared our original cost estimates, we treated the large PBMs the same as a large chain pharmacy. We did not completely

account for the complexity that the systems changes would present to large PBMs. At the time, we allowed for changes to be made on only one operating platform, while commenters pointed out that as many as seven platforms might need to be updated. We agree with commenters that large PBMs have complex systems that often include more than one platform, and that such comprehensive system upgrades can be more costly. Based on the comments, we have revised our cost projections. We amend our estimates from $2 million to $10.5 million for each large PBM company. Since we did not receive any comments from the smaller specialty PBMs, we leave our original assumption as stated in the August 22, 2008 proposed rule. Thus, our cost estimates have increased to $42 million for the large PBMs, and $3.6 million for the remaining small chains, for a total of $45.6 million, unadjusted for present value. We estimate that these costs would be incurred during the first two years of implementation.

d. Vendors

In the August 22, 2008 proposed rule (73 FR 49772), we solicited industry and stakeholder comment on the assumptions that vendor costs will be passed on to the customer over time, and solicited feedback on actual costs for vendor software upgrades and impact on covered entities, including the conversion of historical data. We received no comments from vendors related to their costs to upgrade to Version D.0 and therefore make no changes to this section. The figures from the proposed rule will be included in the summary table at the end of the impact analysis.

Benefits

In the August 22, 2008 proposed rule (73 FR 49742), we assumed that the benefits of converting to Version D.0 would accrue over several years, beginning in 2012. For a full overview of the benefit assumptions, refer to the discussion in the August 22, 2008 proposed rule at 73 FR 49773–49778.

a. Pharmacies

In the August 22, 2008 proposed rule (73 FR 49742), we said pharmacies need Version D.0 to process Medicare Part D claims more efficiently, and with fewer workarounds, particularly with respect to processing coordination of benefits claims.

Comment: We received a few comments on our benefit assumptions. One large pharmacy chain commented that, while they do not disagree that there will be benefits and savings following complete implementation of Version D.0, they are concerned that HHS has overstated those savings. The commenter recognized that the use of Version D.0 will decrease audit risks, however the savings assumption by HHS failed to recognize other gaps that will continue to exist in the outpatient health care system, specifically relative to the coordination of benefits.

Another commenter said that some of the savings numbers are so small (for example, the 1.1 percent of time of a pharmacist being spent on benefit issues), that they become hard to validate. Commenters did not provide any alternative data to show what the benefits to the pharmacies would be in their view.

Response: As we stated in the August 22, 2008 proposed rule (73 FR 79744), we based our assumptions on a study funded by the National Association of Chain Drug Stores (NACDS), ''Pharmacy Activity Cost and Productivity Study'' (*http://www.nacds.org/user-assets/PDF_files/ arthur_andersen.PDF*). In projecting the growth in the number of pharmacies over the next 9 years, we used data from the NACDS, ''Community Retail Pharmacy Outlets by Type of Store, 1996–2006'' (*http://www.nacds.org/userseets/pdfs/facts_resources/2006/Retail_Outlets2006.pdf*). Since we did not get any new data on the benefits, we stand by our assumptions and make no changes to the benefit data.

Health Plans and PBMs

We assumed that if pharmacists and technicians realize productivity savings as a result of the use of Version D.0, then conversely, health plans and PBMs would realize commensurate savings though a reduction in pharmacist and technician calls to customer service representatives at health care plans and PBMs. For a more detailed discussion of these savings through reductions in pharmacist and technician calls to customer service representatives at health plans and PBMs, please refer to the August 22, 2008 proposed rule (73 FR 49778).

Comment: One commenter stated that they felt that there are few if any benefits that will result from the cost of upgrading their system to Version D.0, however they did not expand on this statement or offer any alternative information.

Response: When estimating the benefits accrued to dispensers, we solicited industry and stakeholder comments on our assumptions. Although we received one comment stating that there were few, if any benefits to upgrading to Version D.0, the commenter did not provide us with any other data to refute what we originally proposed. Since most commenters did not dispute our assumptions, we do not make changes in the final rule.

Version 3.0 (Medicaid Pharmacy Subrogation)

As stated in the impact analysis for Version 5010 and Version D.0 above, in this section, we summarize the cost and benefit assumptions from the August 22, 2008 proposed rule, and discuss those with which the commenters disagreed. In cases where we agreed with the commenters and changed our estimates, revised tables are provided. The last section of the impact analysis contains the summary detailed tables with all of the costs and benefits recalculated to reflect the changes.

There was consensus that we should adopt Version 3.0, and we received no comments opposing our cost or benefit assumptions or estimates. However, to accommodate the change in effective and compliance dates for Version 3.0, we have made modifications to each of the tables presented in the proposed rule, and re-published them below.

In the August 22, 2008 proposed rule (73 FR 49779), we said that approximately 37 States were already billing a major portion of their Medicaid pharmacy subrogation claims electronically. Of those 37 States, 33 of them were using a contingency fee contractor to bill their (electronic) claims. The other four (out of 37) States were billing electronically without the use of a contractor. The remaining 14 States were still billing most of their Medicaid pharmacy subrogation claims on paper.

A detailed analysis of the impact on Medicaid agencies and health plans can be found in the proposed rule (73 FR 49779–49781).

In the August 22, 2008 proposed rule (73 FR 49779), we said that the costs for States that currently bill electronically to upgrade their systems to Version 3.0, and to transition from paper Medicaid subrogation claims to using Version 3.0, would be outweighed by the benefits. We did not receive any comments on this conclusion.

1. Impact on States That Use a Contingency Fee Contractor

In the August 22, 2008 proposed rule (73 FR 49779), we said that, for the 33 States that contract out their Medicaid pharmacy subrogation billing processes, there would be no direct costs, and that reimbursement to States would increase proportionally to a projected increase in the volume of electronic claims. The contractors supporting these States

would recover their cost on the back-end, as they would be recouping additional contingency fees based on the volumes. We received no comments on this assumption.

2. Impact on States Converting From Paper

a. Cost of Development

In the August 22, 2008 proposed rule (73 FR 49780), we described the costs that would be incurred by the 14 States converting from a paper process to an electronic process, using Version 3.0, including the cost of development for gap analysis, requirements documentation, training, translator mapping, legacy system changes, acceptance testing and external, end-to-end testing. We said that infrastructure costs would be relatively small, in the range of $50,000 to $150,000 per State, unadjusted for present value. The State would be responsible for 10 percent of those sums, and the Federal government would reimburse the State 90 percent of the design, development, and installation costs related to changes in their Medicaid Management Information Systems (MMIS). We projected that seven States would incur development costs in order to conduct their own billing and the other seven would hire a contingency fee contractor to conduct their billing. We received no comments on these estimates or assumptions.

b. Costs of Adopting and Implementing Trading Partner Agreements (TPAs) With Third Party Payers

In the proposed rule, (73 FR 49780), we said that States would enter into Trading Partner Agreements with other payers in order to conduct subrogation electronically. We projected that approximately forty (40) third party payers, primarily PBMs and claims processors, as well as a few large health plans that process claims in-house, would participate. We stated that trading partner agreements would cost approximately $14,000 to $20,000—with a range of $5,000 to $15,000 for each agreement. We assumed that each State would enter into a trading partner agreement with an average of 15 payers, and that the anticipated costs per State would range from $75,000 to $225,000. As stated in the previous section, we projected that half of the 14 States would hire a contractor, and half would adopt trading partner agreements. Therefore, the agreements with 15 plans would range from $525,000 to $1.6 million, unadjusted for present value. The State would be responsible for 50 percent of the cost since the Federal government reimburses States 50 percent of their administrative costs. We did not receive any comments on this section of the analysis.

3. Impact on States That Bill Electronically (Without a Contractor)

a. Cost of Development

In the August 22, 2008 proposed rule (73 FR 49780), we said that changes for States that bill electronically would be minimal and the cost impact would be much less than for the States that currently bill paper to convert to Version 3.0. We did not receive any comments on this section of the analysis.

b. Costs of Adopting and Implementing Trading Partner Agreements With Third Party Payers

In the August 22, 2008 proposed rule (73 FR 49780), we suggested that the cost to execute and implement trading partner agreements would be approximately $5,000 to $15,000 per agreement, and that four States would establish trading partner agreements with an additional 12 health plans/payers, for a total cost ranging from $20,000 to $60,000, unadjusted for present value. We did not receive any comments on this section of the analysis.

Medicaid Savings

In the August 22, 2008 proposed rule, 73 FR 49780, we stated that the accrued savings to States would outweigh the costs because Medicaid agencies would no longer have to keep track of and use various electronic formats for different payers. We estimated the total number of paper Medicaid pharmacy subrogation claims to be between 2.5 and 3.4 million annually. We cited a study by Milliman in 2006, which was also referenced by the American Medical Association (AMA), which stated that electronic claims can save an average of $3.73 per clean claim. Based on this study, we estimated that the Medicaid program could save an estimated $12.7 million annually unadjusted for present value, once Version 3.0 is fully implemented. We said that the savings represents both State agencies and the Federal government, as the Federal government would share 50 percent of any administrative savings. We did not receive any comments on this section of the analysis.

Impact on Medicaid Pharmacy Providers

In situations where Medicaid has been unable to successfully bill third parties, due to the current challenges of having to use various formats to meet the needs of different payers, States sometimes recoup the subrogation monies from pharmacy providers. We do not believe this practice is widespread and, therefore, did not account for it in the impact analysis. We did not receive any comments on this section of the analysis.

Impact on Third Party Payers (Includes Plan Sponsors, Pharmacy Benefit Managers (PBMs), Prescription Drug Plans (PDPs) and Claims Processors)

1. Impact on Plan Sponsors That Use a PBM or Claim Processor

In the August 22, 2008 proposed rule (73 FR 49781), we stated that the four large PBMs handle about 75 percent of all prescription orders dispensed annually in the United States, and that many of these organizations already accept Version 2.0 subrogation transactions. We said that, for the majority of plan sponsors that contract out their claims adjudication, the costs of implementing Version 3.0 and establishing trading partner agreements would be minimal. We received no comments on this portion of the analysis.

2. Impact on Plan Sponsors That Do Not Use a PBM or Claim Processor

We did not estimate any costs for this sector, as we believe there are few large payers that administer their own claims adjudication. We continue to assume that these payers have already made the necessary investments in developing electronic capabilities to meet HIPAA mandates, and that they will be upgrading their systems in order to accommodate Version D.0, to meet the requirements of this final rule. Since Version 3.0 utilizes a number of the data elements found in Version D.0, we expect additional infrastructure costs to be small. We did not receive any comments on this assumption.

a. Cost of Development

In the August 22, 2008 proposed rule (73 FR 49781), we estimated the development costs to individual health plans that would need to implement Version 3.0 to be similar to the cost for State Medicaid programs, or approximately $50,000 to $150,000. We estimate that there are about 20 payers that do not contract with a PBM and that they would need to upgrade their systems for a total cost of $1 to $3 million, unadjusted for present value. We solicited comments on this subject but received none.

b. Costs of Adopting and Implementing Trading Partner Agreements With States

In the proposed rule (73 FR 49781), we estimated the plan sponsor's costs of adopting and implementing trading partner agreements with States would be similar to the cost estimated for State Medicaid programs, which would range from $5,000 to $15,000 per agreement. We also anticipated that approximately 40 States would utilize a contingency fee contractor, setting up trading partner agreements. We estimated the cost per plan sponsor to range from $60,000 to $180,000, unadjusted for present value, and received no comments on this assumption.

3. Savings Impact

We assumed that 50 percent of all subrogation claims currently require manual review, and that the savings of converting 3.4 million paper claims to electronic transmission would be $3.3 million, unadjusted for present value. We did not receive any comments in the section on savings.

In summary, we did not receive any public comments on the impact analysis for Version 3.0. However, we did receive comments, as described earlier, requesting additional time to implement the standards and expressing the need to implement Version 3.0 either at the same time as, or after, implementation of Version D.0 because of the interdependency of the two standards. The compliance date has been changed to allow for additional implementation time, and to ensure that the Version 3.0 transactions can be used in concert with Version D.0. Based on the adopted effective and compliance dates, we have revised the tables to coincide with the new dates.

Summary of Costs and Benefits for This Final Rule

The final tables, 4a and 4b, which replace tables 14a and 14b from the proposed rule, are the compilation of the total low and high costs and benefits for all of the standards being adopted in this final rule. In the proposed rule, we did not adjust for present value. In order to assure readers a valid comparison, we also did not adjust for present value in the final rule in the main text of the document. However, for the reader's edification, in Tables 4a and 4b, we show the costs and benefits discounted by 7% and 3% to reflect present value.

TABLE 4A—ESTIMATED LOW AND HIGH COSTS—IN MILLIONS*—FOR YEARS 2009 THROUGH 2019 FOR IMPLEMENTATION OF VERSIONS 5010, D.0 AND 3.0

Cost type	Industry	Unadjusted for present value	@ 3% Discount	@ 7% Discount
5010—Imp costs	Hospitals—low	$792	$762	$727
	Hospitals—high	1,584	1,525	1,453
	Physicians—low	370	356	339
	Physicians—high	740	712	679
	Dentists—low	254	245	233
	Dentists—high	508	489	466
	pharmacy—low	57	55	52
	pharmacy—high	114	110	105
	private hp—low	3,063	2,949	2,810
	private hp—high	6,127	5,898	5,621
	govt hp—low	213	205	195
	govt hp—high	410	395	376
	CH—low	137	132	126
	CH—high	167	161	153
5010 Transition costs	Hospitals—low	373	338	298
	Hospitals—high	746	677	597
	Physicians—low	174	158	139
	Physicians—high	348	316	279
	Dentists—low	120	109	96
	Dentists—high	239	217	191
	pharmacy—low	27	24	22
	pharmacy—high	54	49	43
	private hp—low	1,442	1,308	1,154
	private hp—high	2,883	2,615	2,307
	govt hp—low	100	91	80
	govt hp—high	193	175	154
	CH—low	24	22	19
	CH—high	30	27	24
Medicaid subrogation development	federal—low	.32	.29	.27
	federal—high	.94	.87	.79
	state—low	.040	.037	.034
	state—high	.1	.093	.084
	payers—low	1	.93	.844
	payers—high	3	2.78	2.53
Medicaid subrogation—Trading Partner agreements.	federal—low	.38	.35	.32
	federal—high	1.16	1.07	.98
	state—low	.38	.35	.32
	state—high	1.16	1.07	.98
	payers—low	2.4	2.2	2
	payers—high	7	7	6
D.0—pharmacy chain systems implementation	pharmacy—low	18	17	16
	pharmacy—high	38	36	34
Independent pharmacy maintenance fees	pharmacy—low	.54	.51	.48
	pharmacy—high	1.08	1.03	.97

TABLE 4A—ESTIMATED LOW AND HIGH COSTS—IN MILLIONS*—FOR YEARS 2009 THROUGH 2019 FOR IMPLEMENTATION OF VERSIONS 5010, D.0 AND 3.0—Continued

Cost type	Industry	Unadjusted for present value	@ 3% Discount	@ 7% Discount
PBM programming	PBM—low	8	8	7
	PBM—high	10	9.5	9
Total Costs	LOW	7,177	6,783	6,319
Total Costs	HIGH	14,206	13,425	12,505

TABLE 4B—ESTIMATED LOW AND HIGH BENEFITS—IN MILLIONS*—FOR YEARS 2009 THROUGH 2019 FOR IMPLEMENTATION OF VERSIONS 5010, D.0 AND 3.0

Savings type	Industry	Unadjusted for present value	@ 3% Discount	@ 7% Discount
5010 operational savings	Hospitals—low	$348	$286	$224
	Hospitals—high	952	783	612
	Physicians—low	1,392	1,144	895
	Physicians—high	3,802	3,126	2,445
	Dentists—low	237	195	153
	Dentists—high	605	497	389
	pharmacy—low	16	13	10
	pharmacy—high	23	19	15
	private and govt hp—low	1,330	1,093	855
	private and govt hp—high	3,577	2,941	2,300
	CH—low	0	0	0
	CH—high	0	0	0
5010 cost savings increase in transactions	Hospitals—low	66	53	40
	Hospitals—high	219	176	133
	Physicians—low	270	217	164
	Physicians—high	874	702	532
	Dentists—low	45	36	27
	Dentists—high	56	45	34
	pharmacy—low	0	0	0
	pharmacy—high	0	0	0
	private and govt hp—low	135	110	86
	private and govt hp—high	338	276	214
	CH—low	0	0	0
	CH—high	0	0	0
5010 operational savings—increase in auxiliary claim transaction.	Hospitals—low	1,131	897	669
	Hospitals—high	2,890	2,288	1,700
	Physicians—low	4,442	3,517	2,612
	Physicians—high	11,553	9,147	6,795
	Dentists—low	752	595	442
	Dentists—high	1,839	1,456	1,082
	pharmacy—low	0	0	0
	pharmacy—high	0	0	0
	private and govt hp—low	4,519	3,578	2,658
	private and govt hp—high	11,749	9,302	6,910
	CH—low	0	0	0
	CH—high	0	0	0
Medicaid subrogation	fed—low	13	11	10
	fed—high	18	16	13
	state—low	13	11	10
	state—high	18	16	13
	payer—low	7	6	5
	payer—high	9	8	7
Version D.0	Pharmacist productivity—low	951	779	607
	Pharmacist productivity—high	1,921	1,574	1,225
Version D.0	Pharmacy technician productivity—low	77	63	49
	Pharmacy technician productivity—high	160	132	103
Version D.0	Avoided audits—low	152	126	99
	Avoided audits—high	304	251	198
Total Benefits	LOW	15,896	12,732	9,615
Total Benefits	HIGH	40,906	32,753	24,719

Accounting Statement and Table

Whenever a rule is considered a significant rule under Executive Order 12866, we are required to develop an Accounting Statement. This statement must state that we have prepared an accounting statement showing the classification of the expenditures associated with the provisions of this final rule. Monetary annualized Benefits and non-budgetary costs are presented as discounted flows using three percent and seven percent factors.

TABLE 5—ACCOUNTING STATEMENT

[Accounting statement: classification of estimated expenditures, from FY2009 to FY2019 (in millions)]

Category	Primary estimate (millions)	Minimum estimate (millions)	Maximum estimate (millions)	Source citation (RIA, preamble, etc.)
BENEFITS:				
Annualized Monetized benefits:				
7% Discount	2,142.4	1,203.7	3,081.1	RIA
3% Discount	2,389.5	1,314.8	3,437.2	RIA
Qualitative (un-quantified) benefits	Wider adoption of standards due to decrease in use of companion guides; increased productivity due to decrease in manual intervention requirements.			
Benefits generated from plans to providers and pharmacies, providers to plans and pharmacies, and pharmacies to beneficiaries.				
COSTS:				
Annualized Monetized costs:				
7% Discount	1,144.0	787.5	1,500.5	RIA
3% Discount	1,034.8	711.7	1,357.8	RIA
Qualitative (un-quantified) costs	None	None	None	
Cost will be paid by health plans to contractors, programming consultants, IT staff and other outsourced entities; providers will pay costs to software vendors, trainers and other consultants. Clearinghouses will pay costs to IT staff/contractors and software developers; pharmacies will pay costs to contractors, software vendors and trainers, and government plans will pay costs to consultants, vendors and staff.				
TRANSFERS:				
Annualized monetized transfers: "on budget"	N/A	N/A	N/A	
From whom to whom?	N/A	N/A	N/A	
Annualized monetized transfers: "off-budget"	N/A	N/A	N/A	
From whom to whom?	N/A	N/A	N/A	

In accordance with the provisions of Executive Order 12866, as amended, this regulation was reviewed by the Office of Management and Budget.

List of Subjects in 45 CFR Part 162

Administrative practice and procedure, Electronic transactions, Health facilities, Health insurance, Hospitals, Incorporation by reference, Medicare, Medicaid, Reporting and recordkeeping requirements.

■ For the reasons set forth in the preamble, the Department of Health and Human Services amends 45 CFR Part 162 as set forth below:

PART 162—ADMINISTRATIVE REQUIREMENTS

■ 1. The authority citation for part 162 is revised to read as follows:

Authority: Secs. 1171 through 1180 of the Social Security Act (42 U.S.C.1320d–1320d–9), as added by sec. 262 of Pub. L. 104–191, 110 Stat. 2021–2031, and sec. 105 of Public Law 110–233, 122 Stat. 881–922, and sec. 264 of Pub. L. 104–191, 110 Stat. 2033–2034 (42 U.S.C. 1320d–2 (note)).

Subpart A—General Provisions

■ 2. Amend § 162.103 by revising the definition of ''standard transaction'' to read as follows:

§ 162.103 Definitions.

* * * * *

Standard transaction means a transaction that complies with an applicable standard adopted under this part.

Subpart I—General Provisions for Transactions

§ 162.900 [Removed and Reserved]

■ 3. Remove and reserve § 162.900.

■ 4. Amend § 162.920 as follows:

■ A. Revise introductory text and paragraph (a) introductory text.

■ B. Add paragraphs (a)(10) through (a)(18).

■ C. Revise paragraph (b) introductory text.

■ D. Add paragraphs (b)(4) through (b)(6).

The revisions and additions read as follows:

§ 162.920 Availability of implementation specifications.

A person or an organization may directly request copies of the implementation specifications and the Technical Reports Type 3 described in subparts I through S of this part from the publishers listed in this section. The Director of the Federal Register approves the implementation specifications, which include the Technical Reports Type 3 described in this section, for incorporation by reference in subparts I through S of this part in accordance with 5 U.S.C. 552(a) and 1 CFR part 51. The implementation specifications and Technical Reports Type 3 described in this section are also available for inspection by the public at the Centers for Medicare & Medicaid Services (CMS), 7500 Security Boulevard, Baltimore, Maryland 21244. For more information on the availability on the materials at CMS, call (410) 786–6597. The implementation specifications and Technical Reports Type 3 are also available at the National Archives and Records Administration (NARA). For information on the

availability of this material at NARA, call (202) 714–6030, or go to: *http://www.archives.gov/federal_register/code_of_federal_regulations/ibr_locations.html*. Implementation specifications are available for the following transactions.

(a) *ASC X12N specifications and the ASC X12 Standards for Electronic Data Interchange Technical Report Type 3.* The implementation specifications for the ASC X12N and the ASC X12 Standards for Electronic Data Interchange Technical Report Type 3 (and accompanying Errata or Type 1 Errata) may be obtained from the ASC X12, 7600 Leesburg Pike, Suite 430, Falls Church, VA 22043; Telephone (703) 970–4480; and FAX (703) 970–4488. They are also available through the internet at *http://www.X12.org*. A fee is charged for all implementation specifications, including Technical Reports Type 3. Charging for such publications is consistent with the policies of other publishers of standards. The transaction implementation specifications are as follows:

* * * * *

(10) The ASC X12 Standards for Electronic Data Interchange Technical Report Type 3—Health Care Claim: Dental (837), May 2006, ASC X12N/005010X224, and Type 1 Errata to Health Care Claim Dental (837), ASC X12 Standards for Electronic Data Interchange Technical Report Type 3, October 2007, ASC X12N/005010X224A1, as referenced in § 162.1102 and § 162.1802.

(11) The ASC X12 Standards for Electronic Data Interchange Technical Report Type 3—Health Care Claim: Professional (837), May 2006, ASC X12, 005010X222, as referenced in § 162.1102 and § 162.1802.

(12) The ASC X12 Standards for Electronic Data Interchange Technical Report Type 3—Health Care Claim: Institutional (837), May 2006, ASC X12/N005010X223, and Type 1 Errata to Health Care Claim: Institutional (837), ASC X12 Standards for Electronic Data Interchange Technical Report Type 3, October 2007, ASC X12N/005010X223A1, as referenced in § 162.1102 and § 162.1802.

(13) The ASC X12 Standards for Electronic Data Interchange Technical Report Type 3—Health Care Claim Payment/Advice (835), April 2006, ASC X12N/005010X221, as referenced in § 162.1602.

(14) The ASC X12 Standards for Electronic Data Interchange Technical Report Type 3—Benefit Enrollment and Maintenance (834), August 2006, ASC X12N/005010X220, as referenced in § 162.1502.

(15) The ASC X12 Standards for Electronic Data Interchange Technical Report Type 3—Payroll Deducted and Other Group Premium Payment for Insurance Products (820), February 2007, ASC X12N/005010X218, as referenced in § 162.1702.

(16) The ASC X12 Standards for Electronic Data Interchange Technical Report Type 3—Health Care Services Review—Request for Review and Response (278), May 2006, ASC X12N/005010X217, and Errata to Health Care Services Review—Request for Review and Response (278), ASC X12 Standards for Electronic Data Interchange Technical Report Type 3, April 2008, ASC X12N/005010X217E1, as referenced in § 162.1302.

(17) The ASC X12 Standards for Electronic Data Interchange Technical Report Type 3—Health Care Claim Status Request and Response (276/277), August 2006, ASC X12N/005010X212, and Errata to Health Care Claim Status Request and Response (276/277), ASC X12 Standards for Electronic Data Interchange Technical Report Type 3, April 2008, ASC X12N/005010X212E1, as referenced in § 162.1402.

(18) The ASC X12 Standards for Electronic Data Interchange Technical Report Type 3—Health Care Eligibility Benefit Inquiry and Response (270/271), April 2008, ASC X12N/005010X279, as referenced in § 162.1202.

(b) *Retail pharmacy specifications and Medicaid subrogation implementation guides.* The implementation specifications for the retail pharmacy standards and the implementation specifications for the batch standard for the Medicaid pharmacy subrogation transaction may be obtained from the National Council for Prescription Drug Programs, 9240 East Raintree Drive, Scottsdale, AZ 85260. Telephone (480) 477–1000; FAX (480) 767–1042. They are also available through the Internet at *http://www.ncpdp.org*. A fee is charged for all NCPDP Implementation Guides. Charging for such publications is consistent with the policies of other publishers of standards. The transaction implementation specifications are as follows:

* * * * *

(4) The Telecommunication Standard Implementation Guide, Version D, Release 0 (Version D.0), August 2007, National Council for Prescription Drug Programs, as referenced in § 162.1102, § 162.1202, § 162.1302, and § 162.1802.

(5) The Batch Standard Implementation Guide, Version 1, Release 2 (Version 1.2), January 2006, National Council for Prescription Drug Programs, as referenced in § 162.1102, § 162.1202, § 162.1302, and § 162.1802.

(6) The Batch Standard Medicaid Subrogation Implementation Guide, Version 3, Release 0 (Version 3.0), July 2007, National Council for Prescription Drug Programs, as referenced in § 162.1902.

■ 5. Revise § 162.923 paragraph (a) to read as follows:

§ 162.923 Requirements for covered entities.

(a) *General rule.* Except as otherwise provided in this part, if a covered entity conducts, with another covered entity that is required to comply with a transaction standard adopted under this part (or within the same covered entity), using electronic media, a transaction for which the Secretary has adopted a standard under this part, the covered entity must conduct the transaction as a standard transaction.

* * * * *

■ 6. Section 162.925 is amended by adding a new paragraph (a)(6) to read as follows:

§ 162.925 Additional requirements for health plans.

(a) * * *

(6) During the period from March 17, 2009 through December 31, 2011, a health plan may not delay or reject a standard transaction, or attempt to adversely affect the other entity or the transaction, on the basis that it does not comply with another adopted standard for the same period.

* * * * *

Subpart K—Health Care Claims or Equivalent Encounter Information

■ 7. Amend § 162.1102 by—

■ A. Removing paragraph (a).

■ B. Redesignating existing paragraph (b) as paragraph (a).

■ C. Revising the introductory text of newly redesignated paragraph (a).

■ D. Adding new paragraphs (b) and (c).

The revisions and additions read as follows:

§ 162.1102 Standards for health care claims or equivalent encounter information transaction.

* * * * *

(a) For the period from October 16, 2003 through March 16, 2009:

* * * * *

(b) For the period from March 17, 2009 through December 31, 2011, both:

(1)(i) The standards identified in paragraph (a) of this section; and

(ii) For retail pharmacy supplies and professional services claims, the

following: The ASC X12N 837—Health Care Claim: Professional, Volumes 1 and 2, Version 4010, May 2000, Washington Publishing Company, 004010X096, October 2002 (Incorporated by reference in § 162.920); and

(2)(i) *Retail pharmacy drug claims.* The Telecommunication Standard Implementation Guide, Version D, Release 0 (Version D.0), August 2007 and equivalent Batch Standard Implementation Guide, Version 1, Release 2 (Version 1.2), National Council for Prescription Drug Programs. (Incorporated by reference in § 162.920.)

(ii) *Dental health care claims.* The ASC X12 Standards for Electronic Data Interchange Technical Report Type 3—Health Care Claim: Dental (837), May 2006, ASC X12N/005010X224, and Type 1 Errata to Health Care Claim: Dental (837) ASC X12 Standards for Electronic Date Interchange Technical Report Type 3, October 2007, ASC X12N/005010X224A1. (Incorporated by reference in § 162.920.)

(iii) *Professional health care claims.* The ASC X12 Standards for Electronic Data Interchange Technical Report Type 3—Health Care Claim: Professional (837), May 2006, ASC X12N/005010X222. (Incorporated by reference in § 162.920.)

(iv) *Institutional health care claims.* The ASC X12 Standards for Electronic Data Interchange Technical Report Type 3—Health Care Claim: Institutional (837), May 2006, ASC X12N/005010X223, and Type 1 Errata to Health Care Claim: Institutional (837) ASC X12 Standards for Electronic Data Interchange Technical Report Type 3, October 2007, ASC X12N/005010X223A1. (Incorporated by reference in § 162.920.)

(v) *Retail pharmacy supplies and professional services claims.* (A) The Telecommunication Standard, Implementation Guide Version 5, Release 1, September 1999. (Incorporated by reference in § 162.920.)

(B) The Telecommunication Standard Implementation Guide, Version D, Release 0 (Version D.0), August 2007, and equivalent Batch Standard Implementation Guide, Version 1, Release 2 (Version 1.2), National Council for Prescription Drug Programs (Incorporated by reference in § 162.920); and

(C) The ASC X12 Standards for Electronic Data Interchange Technical Report Type 3—Health Care Claim: Professional (837), May 2006, ASC X12N/005010X222. (Incorporated by reference in § 162.920.)

(c) For the period on and after the January 1, 2012, the standards identified in paragraph (b)(2) of this section, except the standard identified in paragraph (b)(2)(v)(A) of this section.

Subpart L—Eligibility for a Health Plan

■ 8. Section 162.1202 is amended by—
■ A. Removing paragraph (a).
■ B. Redesignating existing paragraph (b) as paragraph (a).
■ C. Revising the introductory text of newly redesignated paragraph (a).
■ D. Adding new paragraphs (b) and (c).

The revisions and additions read as follows:

§ 162.1202 Standards for eligibility for a health plan transaction.

* * * * *

(a) For the period from October 16, 2003 through March 16, 2009:

* * * * *

(b) For the period from March 17, 2009 through December 31, 2011 both:

(1) The standards identified in paragraph (a) of this section; and

(2) (i) *Retail pharmacy drugs.* The Telecommunication Standard Implementation Guide Version D, Release 0 (Version D.0), August 2007, and equivalent Batch Standard Implementation Guide, Version 1, Release 2 (Version 1.2), National Council for Prescription Drug Programs. (Incorporated by reference in § 162.920.)

(ii) *Dental, professional, and institutional health care eligibility benefit inquiry and response.* The ASC X12 Standards for Electronic Data Interchange Technical Report Type 3—Health Care Eligibility Benefit Inquiry and Response (270/271), April 2008, ASC X12N/005010X279. (Incorporated by reference in § 162.920.)

(c) For the period on and after January 1, 2012, the standards identified in paragraph (b)(2) of this section.

Subpart M—Referral Certification and Authorization

■ 9. Revise § 162.1301 to read as follows:

§ 162.1301 Referral certification and authorization transaction.

The referral certification and authorization transaction is any of the following transmissions:

(a) A request from a health care provider to a health plan for the review of health care to obtain an authorization for the health care.

(b) A request from a health care provider to a health plan to obtain authorization for referring an individual to another health care provider.

(c) A response from a health plan to a health care provider to a request described in paragraph (a) or paragraph (b) of this section.

■ 10. Section 162.1302 is amended by—
■ A. Removing paragraph (a).
■ B. Redesignating existing paragraph (b) as paragraph (a).
■ C. Revising the introductory text of newly redesignated paragraph (a).
■ D. Adding new paragraphs (b) and (c).

The revisions and additions read as follows:

§ 162.1302 Standards for referral certification and authorization transaction.

* * * * *

(a) For the period from October 16, 2003 through March 16, 2009:

* * * * *

(b) For the period from March 17, 2009 through December 31, 2011 both—

(1) The standards identified in paragraph (a) of this section; and

(2)(i) *Retail pharmacy drugs.* The Telecommunication Standard Implementation Guide Version D, Release 0 (Version D.0), August 2007, and equivalent Batch Standard Implementation Guide, Version 1, Release 2 (Version 1.2), National Council for Prescription Drug Programs. (Incorporated by reference in § 162.920.)

(ii) *Dental, professional, and institutional request for review and response.* The ASC X12 Standards for Electronic Data Interchange Technical Report Type 3—Health Care Services Review—Request for Review and Response (278), May 2006, ASC X12N/005010X217, and Errata to Health Care Services Review-—Request for Review and Response (278), ASC X12 Standards for Electronic Data Interchange Technical Report Type 3, April 2008, ASC X12N/005010X217E1. (Incorporated by reference in § 162.920.)

(c) For the period on and after January 1, 2012, the standards identified in paragraph (b)(2) of this section.

Subpart N—Health Care Claim Status

■ 11. Revise § 162.1401 to read as follows:

§ 162.1401 Health care claim status transaction.

The health care claim status transaction is the transmission of either of the following:

(a) An inquiry from a health care provider to a health plan to determine the status of a health care claim.

(b) A response from a health plan to a health care provider about the status of a health care claim.

■ 12. Section 162.1402 is revised to read as follows:

§ 162.1402 Standards for health care claim status transaction.

The Secretary adopts the following standards for the health care claim status transaction:

(a) For the period from October 16, 2003 through March 16, 2009: The ASC X12N–276/277 Health Care Claim Status Request and Response, Version 4010, May 2000, Washington Publishing Company, 004010X093 and Addenda to Health Care Claim Status Request and Response, Version 4010, October 2002, Washington Publishing Company, 004010X093A1. (Incorporated by reference in § 162.920.)

(b) For the period from March 17, 2009 through December 31, 2011, both:

(1) The standard identified in paragraph (a) of this section; and

(2) The ASC X12 Standards for Electronic Data Interchange Technical Report Type 3—Health Care Claim Status Request and Response (276/277), August 2006, ASC X12N/005010X212, and Errata to Health Care Claim Status Request and Response (276/277), ASC X12 Standards for Electronic Data Interchange Technical Report Type 3, April 2008, ASC X12N/005010X212E1. (Incorporated by reference in § 162.920.)

(c) For the period on and after January 1, 2012, the standard identified in paragraph (b)(2) of this section.

Subpart O—Enrollment and Disenrollment in a Health Plan

13. Revise § 162.1501 to read as follows:

§ 162.1501 Enrollment and disenrollment in a health plan transaction.

The enrollment and disenrollment in a health plan transaction is the transmission of subscriber enrollment information from the sponsor of the insurance coverage, benefits, or policy, to a health plan to establish or terminate insurance coverage.

■ 14. Section 162.1502 is revised to read as follows:

§ 162.1502 Standards for enrollment and disenrollment in a health plan transaction.

The Secretary adopts the following standards for enrollment and disenrollment in a health plan transaction.

(a) For the period from October 16, 2003 through March 16, 2009: ASC X12N 834—Benefit Enrollment and Maintenance, Version 4010, May 2000, Washington Publishing Company, 004010X095 and Addenda to Benefit Enrollment and Maintenance, Version 4010, October 2002, Washington Publishing Company, 004010X095A1. (Incorporated by reference in § 162.920.)

(b) For the period from March 17, 2009 through December 31, 2011, both:

(1) The standard identified in paragraph (a) of this section; and

(2) The ASC X12 Standards for Electronic Data Interchange Technical Report Type 3—Benefit Enrollment and Maintenance (834), August 2006, ASC X12N/005010X220 (Incorporated by reference in § 162.920)

(c) For the period on and after January 1, 2012, the standard identified in paragraph (b)(2) of this section.

Subpart P—Health Care Payment and Remittance Advice

■ 15. Section 162.1602 is revised to read as follows:

§ 162.1602 Standards for health care payment and remittance advice transaction:

The Secretary adopts the following standards for the health care payment and remittance advice transaction:

(a) For the period from October 16, 2003 through March 16, 2009: Health care claims and remittance advice. The ASC X12N 835—Health Care Claim Payment/Advice, Version 4010, May 2000, Washington Publishing Company, 004010X091, and Addenda to Health Care Claim Payment/Advice, Version 4010, October 2002, Washington Publishing Company, 004010X091A1. (Incorporated by reference in § 162.920.)

(b) For the period from March 17, 2009 through December 31, 2011, both:

(1) The standard identified in paragraph (a) of this section; and

(2) The ASC X12 Standards for Electronic Data Interchange Technical Report Type 3—Health Care Claim Payment/Advice (835), April 2006, ASC X12N/005010X221. (Incorporated by reference in § 162.920.)

(c) For the period on and after January 1, 2012, the standard identified in paragraph (b)(2) of this section.

Subpart Q—Health Plan Premium Payments

■ 16. Section 162.1702 is revised to read as follows:

§ 162.1702 Standards for health plan premium payments transaction.

The Secretary adopts the following standards for the health plan premium payments transaction:

(a) For the period from October 16, 2003 through March 16, 2009: The ASC X12N 820—Payroll Deducted and Other Group Premium Payment for Insurance Products, Version 4010, May 2000, Washington Publishing Company, 004010X061, and Addenda to Payroll Deducted and Other Group Premium Payment for Insurance Products, Version 4010, October 2002, Washington Publishing Company, 004010X061A1. (Incorporated by reference in § 162.920.)

(b) For the period from March 17, 2009 through December 31, 2011, both:

(1) The standard identified in paragraph (a) of this section, and

(2) The ASC X12 Standards for Electronic Data Interchange Technical Report Type 3—Payroll Deducted and Other Group Premium Payment for Insurance Products (820), February 2007, ASC X12N/005010X218. (Incorporated by reference in § 162.920.)

(c) For the period on and after January 1, 2012, the standard identified in paragraph (b)(2) of this section.

Subpart R—Coordination of Benefits

■ 17. Section 162.1802 is amended by—

■ A. Removing paragraph (a).

■ B. Redesignating existing paragraph (b) as paragraph (a).

■ C. Revising the introductory text of newly redesignated paragraph (a).

■ D. Adding new paragraphs (b) and (c).

The additions and revisions read as follows:

§ 162.1802 Standards for coordination of benefits information transaction.

* * * * *

(a) For the period from October 16, 2003 through March 16, 2009:

* * * * *

(b) For the period from March 17, 2009 through December 31, 2011, both:

(1) The standards identified in paragraph (a) of this section; and

(2)(i) *Retail pharmacy drug claims.* The Telecommunication Standard Implementation Guide, Version D, Release 0 (Version D.0), August 2007, and equivalent Batch Standard Implementation Guide, Version 1, Release 2 (Version 1.2), National Council for Prescription Drug Programs. (Incorporated by reference in § 162.920.)

(ii) The ASC X12 Standards for Electronic Data Interchange Technical Report Type 3—Health Care Claim: Dental (837), May 2006, ASC X12N/005010X224, and Type 1 Errata to Health Care Claim: Dental (837), ASC X12 Standards for Electronic Date Interchange Technical Report Type 3, October 2007, ASC X12N/005010X224A1. (Incorporated by reference in § 162.920.)

(iii) The ASC X12 Standards for Electronic Data Interchange Technical Report Type 3—Health Care Claim: Professional (837), May 2006, ASC X12N/005010X222. (Incorporated by reference in § 162.920.)

(iv) The ASC X12 Standards for Electronic Data Interchange Technical Report Type 3—Health Care Claim: Institutional (837), May 2006, ASC X12N/005010X223, and Type 1 Errata to Health Care Claim: Institutional (837), ASC X12 Standards for Electronic Data Interchange Technical Report Type 3,

October 2007, ASC X12N/005010X223A1. (Incorporated by reference in § 162.920.)

(c) For the period on and after January 1, 2012, the standards identified in paragraph (b)(2) of this section.

■ 18. Add a new Subpart S to read as follows:

Subpart S—Medicaid Pharmacy Subrogation

Sec.
162.1901 Medicaid pharmacy subrogation transaction.
162.1902 Standard for Medicaid pharmacy subrogation transaction.

§ 162.1901 Medicaid pharmacy subrogation transaction.

The Medicaid pharmacy subrogation transaction is the transmission of a claim from a Medicaid agency to a payer for the purpose of seeking reimbursement from the responsible health plan for a pharmacy claim the State has paid on behalf of a Medicaid recipient.

§ 162.1902 Standard for Medicaid pharmacy subrogation transaction.

The Secretary adopts the Batch Standard Medicaid Subrogation Implementation Guide, Version 3, Release 0 (Version 3.0), July 2007, National Council for Prescription Drug Programs, as referenced in § 162.1902 (Incorporated by reference at § 162.920):

(a) For the period on and after January 1, 2012, for covered entities that are not small health plans;

(b) For the period on and after January 1, 2013 for small health plans.

(Catalog of Federal Domestic Assistance Program No. 93.778, Medical Assistance Program) (Catalog of Federal Domestic Assistance Program No. 93.773, Medicare—Hospital Insurance; and Program No. 93.774, Medicare—Supplementary Medical Insurance Program)

Approved: December 11, 2008.

Michael O. Leavitt,

Secretary.

[FR Doc. E9–740 Filed 1–15–09; 8:45 am]

BILLING CODE 4150–28–P

DEPARTMENT OF HEALTH AND HUMAN SERVICES

Office of the Secretary

45 CFR Part 162

[CMS–0013–F]

RIN 0958–AN25

HIPAA Administrative Simplification: Modifications to Medical Data Code Set Standards To Adopt ICD–10–CM and ICD–10–PCS

AGENCY: Office of the Secretary, HHS.

ACTION: Final rule.

SUMMARY: This final rule adopts modifications to two of the code set standards adopted in the Transactions and Code Sets final rule published in the **Federal Register** pursuant to certain provisions of the Administrative Simplification subtitle of the Health Insurance Portability and Accountability Act of 1996 (HIPAA). Specifically, this final rule modifies the standard medical data code sets (hereinafter ''code sets'') for coding diagnoses and inpatient hospital procedures by concurrently adopting the International Classification of Diseases, 10th Revision, Clinical Modification (ICD–10–CM) for diagnosis coding, including the Official ICD–10–CM Guidelines for Coding and Reporting, as maintained and distributed by the U.S. Department of Health and Human Services (HHS), hereinafter referred to as ICD–10–CM, and the International Classification of Diseases, 10th Revision, Procedure Coding System (ICD–10–PCS) for inpatient hospital procedure coding, including the Official ICD–10–PCS Guidelines for Coding and Reporting, as maintained and distributed by the HHS, hereinafter referred to as ICD–10–PCS. These new codes replace the International Classification of Diseases, 9th Revision, Clinical Modification, Volumes 1 and 2, including the Official ICD–9–CM Guidelines for Coding and Reporting, hereinafter referred to as ICD–9–CM Volumes 1 and 2, and the International Classification of Diseases, 9th Revision, Clinical Modification, Volume 3, including the Official ICD–9–CM Guidelines for Coding and Reporting, hereinafter referred to as ICD–9–CM Volume 3, for diagnosis and procedure codes, respectively.

DATES: The effective date of this regulation is March 17, 2009. The effective date is the date that the policies herein take effect, and new policies are considered to be officially adopted. The compliance date, which is different than the effective date, is the date on which entities are required to have implemented the policies adopted in this rule. The compliance date for this regulation is October 1, 2013.

FOR FURTHER INFORMATION CONTACT: Denise M. Buenning, (410) 786–6711 or Shannon L. Metzler, (410) 786–3267.

I. Background

A. Statutory Background

The Congress addressed the need for a consistent framework for electronic transactions and other administrative simplification issues in the Health Insurance Portability and Accountability Act of 1996 (HIPAA), Public Law 104–191, enacted on August 21, 1996. HIPAA has helped to improve the Medicare and Medicaid programs, and the efficiency and effectiveness of the health care system in general, by encouraging the development of standards and requirements to facilitate the electronic transmission of certain health information.

Through subtitle F of title II of that statute, the Congress added to title XI of the Social Security Act (the Act) a new Part C, titled ''Administrative Simplification.'' Part C of title XI of the Act now consists of sections 1171 through 1180. Section 1172 of the Act and the implementing regulations make any standard adopted under Part C applicable to: (1) Health plans; (2) health care clearinghouses; and (3) health care providers who transmit any health information in electronic form in connection with a transaction for which the Secretary has adopted a standard.

Section 1172(c)(1) of the Act requires any standard adopted by the Secretary of the Department of Health and Human Services (HHS) to be developed, adopted, or modified by a standard setting organization (SSO), except in the cases identified under section 1172(c)(2) of the Act. Under section 1172(c)(2)(A) of the Act, the Secretary may adopt a standard that is different from any standard developed by an SSO if it will substantially reduce administrative costs to health care providers and health plans compared to the alternatives, and the standard is promulgated in accordance with the rulemaking procedures of subchapter III of chapter 5 of Title 5 of the United States Code. Under section 1172(c)(2)(B) of the Act, if no SSO has developed, adopted, or modified any standard relating to a standard that the Secretary is authorized or required to adopt, section 1172(c)(1) does not apply.

Section 1172 of the Act also sets forth consultation requirements that must be met before the Secretary may adopt

standards. The SSO must consult with the following organizations in the course of the development, adoption, or modification of the standard: National Uniform Billing Committee (NUBC), the National Uniform Claim Committee (NUCC), the Workgroup for Electronic Data Interchange (WEDI), and the American Dental Association (ADA). For a standard that was not developed by an SSO, the Secretary is required to consult with each of the above-named groups before adopting the standard. Under section 1172(f) of the Act, the Secretary must also rely on the recommendations of the National Committee on Vital and Health Statistics (NCVHS) and consult with appropriate Federal and State agencies and private organizations.

Section 1173(a) of the Act requires the Secretary to adopt transaction standards and data elements for the electronic exchange of health information for certain health care transactions. Under sections 1173(b) through (f) of the Act, the Secretary is required to adopt standards for: Unique health identifiers, code sets, security standards for health information, electronic signatures, and the transfer of information among health plans.

Section 1174 of the Act requires the Secretary to review the adopted standards and adopt modifications as appropriate, but not more frequently than once every 12 months in a manner which minimizes disruption and cost of compliance. The same section requires the Secretary to ensure that procedures exist for the routine maintenance, testing, enhancement, and expansion of code sets, along with instructions on how data elements encoded before any modification may be converted or translated to preserve the information value of any pre-existing data elements.

Section 1175(b) of the Act provides for a compliance date not later than 24 months after the date on which an initial standard or implementation specification is adopted for all covered entities except small health plans, for which the statute provides for a compliance date not later than 36 months after the date on which an initial standard or implementation specification is adopted. If the Secretary adopts a modification to a HIPAA standard or implementation specification, the compliance date for the modification may not be earlier than the 180th day of the period beginning on the date such modification is adopted. The Secretary may consider the nature and extent of the modification when determining compliance dates. The Secretary may extend the time for compliance for small health plans.

B. Regulatory Background: Adoption and Modification of HIPAA Code Sets

The Transactions and Code Sets final rule (65 FR 50312) published in the **Federal Register** on August 17, 2000 (hereinafter referred to as the ''August 17, 2000 final rule'') implemented some of the requirements of the Administrative Simplification subtitle of HIPAA, by adopting standards for eight electronic transactions for use by covered entities (health plans, health care clearinghouses, and those health care providers who transmit any health information in electronic form in connection with a transaction for which the Secretary has adopted a standard). We established these standards at 45 CFR parts 160, subpart A, and 162, subparts A, and I through R. The ''Modifications to Electronic Data Transaction Standards and Code Sets'' final rule, published on February 20, 2003 (68 FR 8381) (hereinafter referred to as the ''February 20, 2003 final rule''), modified the implementation specifications for several adopted transactions standards, among other provisions. Please refer to the August 17, 2000 final rule and the February 20, 2003 final rule for detailed discussions of electronic data interchange and an analysis of the public comments received during the promulgation of both rules.

In the August 17, 2000 final rule, we also adopted standard code sets for use in those transactions, including:

- International Classification of Diseases, 9th Revision, Clinical Modification (ICD–9–CM) Volumes 1 and 2 (including the Official ICD–9–CM Guidelines for Coding and Reporting) as maintained and distributed by the Department of Health and Human Services (HHS), for coding diseases, injuries, impairments, other health problems and their manifestations, and causes of injury, disease, impairment, or other health problems.
- ICD–9–CM Volume 3 (including the Official ICD–9–CM Guidelines for Coding and Reporting) as maintained and distributed by HHS, for procedures or other actions taken for diseases, injuries, and impairments on hospital inpatients reported by hospitals regarding prevention, diagnosis, treatment, and management.

ICD–9–CM Volumes 1 and 2, and ICD–9–CM Volume 3 were already widely used in administrative transactions when we promulgated the August 17, 2000 final rule, and we decided that adopting these existing code sets would be less disruptive for covered entities than modified or new code sets. Please refer to the August 17, 2000 final rule for details of that discussion, as well as a discussion of utilizing ICD–10–CM and ICD–10–PCS as a future HIPAA standard code set (65 FR 50327). Please refer to the August 17, 2000 final rule; ''Standards for Privacy of Individually Identifiable Health Information'' (65 FR 82462), published in the **Federal Register** on December 28, 2000; Standards for Privacy of Individually Identifiable Health Information; Final Rule (67 FR 53182) published in the **Federal Register** on August 14, 2002; and ''the Modification to Code Set Standards To Adopt ICD–10–CM and ICD–10–PCS'' proposed rule (hereinafter referred to as the ''August 22, 2008 proposed rule'') (73 FR 49796), published in the **Federal Register** on August 22, 2008 for further information about electronic data interchange and the regulatory background.

II. ICD–9–CM

The 9th revision of the International Classification of Diseases (ICD–9) was originally developed and maintained by the World Health Organization (WHO). While it was originally designed to classify causes of death (mortality), the scope of ICD–9 was expanded, through the development of the U.S. clinical modification, to include non-fatal diseases (morbidity). The Centers for Disease Control and Prevention (CDC) developed and maintains a clinical modification of ICD–9 for diagnosis codes which is called ''ICD–9–CM Volumes 1 and 2.'' The Centers for Medicare & Medicaid Services (CMS) maintains an additional clinical modification of ICD–9 for inpatient hospital procedure codes, which is called ''ICD–9–CM Volume 3.'' The Secretary adopted CDC's ICD–9–CM in 1979 for morbidity applications. ICD–9–CM has been used since 1983 as the basic input for assigning diagnosis-related groups for Medicare's Inpatient Prospective Payment System. ICD–9–CM Volumes 1 and 2, and ICD–9–CM Volume 3 were adopted as HIPAA code sets in 2000 for reporting diagnoses, injuries, impairments, and other health problems and their manifestations, and causes of injury, disease, impairment, or other health problems in standard transactions.

A. ICD–9–CM, Volumes 1 and 2 (Diagnosis)

CDC developed ICD–9–CM, Volumes 1 and 2. It produced a clinical modification to the WHO's ICD–9 by adding more specificity to its diagnosis codes. ICD–9–CM diagnosis codes are three to five digits long, and are used by

all types of health care providers, including hospitals and physician practices. The code set is organized into chapters by body system. For a discussion of the structure of the ICD–9–CM diagnosis code sets, please refer to the August 22, 2008 proposed rule (73 FR 49798).

B. ICD–9–CM, Volume 3 (Procedures)

Inpatient hospital services procedures are currently coded using ICD–9–CM Volume 3, which was adopted as a HIPAA standard in 2000 for reporting inpatient hospital procedures. Current Procedural Terminology, 4th Edition (CPT–4) and Healthcare Common Procedure Coding System (HCPCS) are used to code all other procedures. The ICD–9–CM procedure codes, which are maintained by CMS, are three to four digits long and organized into chapters by body system (for example, musculoskeletal, urinary and circulatory systems, etc.). For a discussion of the structure of the ICD–9–CM procedure code set, please refer to the August 22, 2008 proposed rule (73 FR 49798).

C. Limitations of ICD–9–CM

In the August 22, 2008 proposed rule (73 FR 49799), we discussed the shortcomings of ICD–9–CM. The ICD–9–CM code set is 29 years old, its approximately 16,000 procedure and diagnosis codes are insufficient to continue to allow for the addition of new codes, and, because it cannot accommodate new procedures, its capacity as a fully functioning code set is diminished. Many chapters of ICD–9–CM are full, and in others the hierarchical structure of the ICD–9–CM procedure code set is compromised. This means that some chapters can no longer accommodate new codes, so any additional codes must be assigned to other, topically unrelated chapters (for example, inserting a heart procedure code in the eye chapter of the code set). The ICD–9–CM code set was never designed to provide the increased level of detail needed to support emerging needs, such as biosurveillance and pay-for-performance programs (P4P), also known as value-based purchasing or competitive purchasing. For a detailed discussion of the shortcomings of the ICD–9–CM code set, please refer to the August 22, 2008 proposed rule (75 FR 49799).

D. Maintaining/Updating ICD–9–CM (Volumes 1, 2, and 3)

Recognizing the need for ICD–9–CM to be a flexible, dynamic statistical tool to meet expanding classification needs, the ICD–9–CM Coordination and Maintenance Committee was created in 1985 as an open forum for receiving public comments on proposed code revisions, deletions, and additions. The Committee is co-chaired by CDC and CMS; CDC maintains ICD–9–CM Diagnosis Codes (Volumes 1 and 2), and CMS maintains ICD–9–CM Procedure Codes (Volume 3).

As discussed in the August 22, 2008 proposed rule (73 FR 49805), we will re-name the ICD–9–CM Coordination and Maintenance Committee as the ICD–10 Coordination and Maintenance Committee at the point when ICD–10 becomes the new HIPAA standard. Until that time, the ICD–9–CM Coordination and Maintenance Committee will continue to update and maintain ICD–9–CM. For a discussion of maintaining and updating code sets, please refer to the August 22, 2008 proposed rule (73 FR 49798–49799).

III. ICD–10 and the Development of ICD–10–CM and PCS

The ICD–10 code sets provide a standard coding convention that is flexible, providing unique codes for all substantially different health conditions. It also allows new procedures and diagnoses to be easily incorporated as new codes for both existing and future clinical protocols. ICD–10–CM and ICD–10–PCS provide specific diagnosis and treatment information that can improve quality measurements and patient safety, and the evaluation of medical processes and outcomes. ICD–10–PCS has the capability to readily expand and capture new procedures and technologies.

A. ICD–10–CM Diagnosis Codes

CDC's National Center for Health Statistics (NCHS) developed the ICD–10–CM code set, following a voluntary consensus-based process and working closely with specialty societies to ensure clinical utility and subject matter expert input into the process of creating the clinical modifications, with comments from a number of prominent specialty groups and organizations that addressed specific concerns or perceived unmet clinical needs encountered with ICD–9–CM. NCHS also had discussions with other users of the ICD–10 code set, specifically nursing, rehabilitation, primary care providers, the National Committee for Quality Assurance (NCQA), long-term care and home health care providers, and managed care organizations to solicit their comments about the ICD–10 code set. There are approximately 68,000 ICD–10–CM codes. ICD–10–CM diagnosis codes are three to seven alphanumeric characters. The ICD–10–CM code set provides much more information and detail within the codes than ICD–9–CM, facilitating timely electronic processing of claims by reducing requests for additional information.

ICD–10–CM also includes significant improvements over ICD–9–CM in coding primary care encounters, external causes of injury, mental disorders, neoplasms, and preventive health. The ICD–10–CM code set reflects advances in medicine and medical technology, as well as accommodates the capture of more detail on socioeconomics, ambulatory care conditions, problems related to lifestyle, and the results of screening tests. It also provides for more space to accommodate future expansions, laterality for specifying which organ or part of the body is involved as well as expanded distinctions for ambulatory and managed care encounters.

B. ICD–10–PCS Procedure Codes

CMS developed a procedure coding system, ICD–10–PCS. ICD–10–PCS has no direct relationship to the basic ICD–10 diagnostic classification, which does not include procedures, and has a totally different structure from ICD–10–CM. ICD–10–PCS is sufficiently detailed to describe complex medical procedures. This becomes increasingly important when assessing and tracking the quality of medical processes and outcomes, and compiling statistics that are valuable tools for research. ICD–10–PCS has unique, precise codes to differentiate body parts, surgical approaches, and devices used. It can be used to identify resource consumption differences and outcomes for different procedures, and describes precisely what is done to the patient. ICD–10–PCS codes have seven alphanumeric characters and group together services into approximately 30 procedures identified by a leading alpha character. There are 16 sections of tables that determine code selection, with each character having a specific meaning. (See section V of the August 22, 2008 proposed rule (73 FR 49802–49803) for a chart that compares ICD–9–CM, ICD–10–CM, and ICD–10–PCS codes.)

As explained in the August 22, 2008 proposed rule (73 FR 49801), to our knowledge, no SSO has developed, adopted, or modified a standard code set that is suitable for reporting medical diagnoses and hospital inpatient procedures for purposes of administrative transactions.

IV. Summary of Proposed Provisions and Analysis of and Responses to Public Comments

In the August 22, 2008 proposed rule (73 FR 49796), we solicited comments from stakeholders and other interested parties on the proposed adoption of ICD–10–CM and ICD–10–PCS code sets. We received 3,115 timely public submissions from all segments of the health care industry including providers, physician practices, hospitals, coders, standards development organizations, vendors, State Medicaid agencies, State agencies, corporations, tribal representatives, healthcare professional and industry trade associations, and disease-related advocacy groups.

Some comments were received timely, but were not relevant to the August 22, 2008 proposed rule and were not considered in our responses. Those comments referred to general Medicare program operations; a call for the development of a single payer health care system in the United States; general economic issues; a request for finalization of HIPAA standards that were not included in the August 22, 2008 proposed rule; a request to adopt coding guidelines for CPT codes; comments on another unrelated notice of proposed rulemaking; and other issues that are outside of the purview of the August 22, 2008 proposed rule. The relevant and timely submissions within the scope of the August 22, 2008 proposed rule that we received tended to provide multiple detailed comments on our proposals.

Brief summaries of each proposed provision, a summary of the public comments we received (with the exception of specific comments on the economic impact analysis), and our responses to the comments are set forth below:

A. Adoption of ICD–10–CM and ICD–10–PCS as Medical Data Code Sets Under HIPAA

In § 162.1002(c)(2), we proposed to adopt ICD–10–CM (including the official guidelines) to replace ICD–9–CM Volumes 1 and 2 (including the official coding guidelines), for coding diseases; injuries; impairments; other health problems and their manifestations; and causes of injury, disease and impairment, or other health problems.

In § 162.1002(c)(3), we proposed to adopt ICD–10–PCS (including the official guidelines) to replace ICD–9–CM Volume 3 (including the official coding guidelines) for the following procedures or other actions taken for diseases, injuries, and impairments on hospital inpatients reported by hospitals: prevention, diagnosis, treatment, and management.

Comment: Commenters overwhelmingly supported our proposal to adopt ICD–10–CM and ICD–10–PCS as code sets under HIPAA, replacing the ICD–9–CM Volumes 1 and 2, and the ICD–9–CM Volume 3 code sets, respectively, citing the benefits we described in the August 22, 2008 proposed rule. Some commenters pointed out that the United States, with its continued use of ICD–9–CM, is behind the rest of the world which has already migrated to ICD–10, and that ICD–9–CM's basic structure is flawed and outdated, and cannot accommodate new medical technology and terminology. Commenters agreed that ICD–9–CM Volume 3 is running out of space, and that this space limitation curtails the ability to capture accurate reimbursement and quality data for health care documentation. A few commenters noted that, as providers migrate toward the use of electronic health records (EHRs), use of the more robust ICD–10–CM and ICD–10–PCS codes will be necessary to support EHRs' more detailed information requirements. Another commenter noted that waiting to move to ICD–10–CM and ICD–10–PCS incurs its own costs as the underlying data used for patient care improvement, institutional quality reviews, medical research and reimbursement becomes increasingly unreliable.

Response: We are amending § 162.1002 to adopt ICD–10–CM and ICD–10–PCS as medical data code sets under HIPAA, replacing ICD–9–CM, Volumes 1 and 2, and ICD–9–CM Volume 3.

Comment: We also received a number of comments stating that we should not adopt ICD–10–CM and ICD–10–PCS as code sets under HIPAA. Several commenters said that the ICD–9–CM code set is adequate to meet current coding needs, making ICD–10–CM and ICD–10–PCS unnecessary. These commenters said that current ICD–9–CM codes do not have serious limitations, and perhaps simply need some modifications to alleviate any limitations that ICD–9–CM might have. A number of commenters said that we should not adopt ICD–10–CM and ICD–10–PCS because the cost associated with the transition from ICD–9–CM to ICD–10–CM and ICD–10–PCS would be a burden to industry. However, they did not offer specific alternative solutions.

Other commenters offered a number of different alternatives, including:

- Create additional space in ICD–9–CM through the annual elimination and reassignment of codes that are no longer used.
- Modify the structure of ICD–9–CM to provide for the assignment of additional codes.
- Continue to assign new procedures to the two, previously unassigned overflow chapters of ICD–9–CM, chapters 00 and 17, and once those chapters are filled, no new codes should be created that cannot be assigned to the appropriate body system chapter.
- Adopt the American Medical Association's Physicians' Current Procedural Terminology (CPT) for coding inpatient hospital procedures.
- Wait and adopt the ICD–11 code set. Two commenters stated that by the time the United States has achieved proficiency using ICD–10–CM and ICD–10–PCS, the rest of the world will be using ICD–11, and our nation's coding reporting system will once again be incompatible with that of other countries.
- Decouple the coding of diseases at the point of patient care from the classification of diseases for secondary uses of medical record data by developing a U.S. Disease-Entity Coding System (USDECS) instead of adopting ICD–10–CM.

One commenter erroneously interpreted our proposed adoption of ICD–10–PCS as a proposal to replace CPT codes in the ambulatory setting. Another commenter said we should recognize that hospital outpatient departments are currently required to report using HCPCS and CPT codes, but that some hospitals have elected to code these hospital outpatient medical records using ICD–9–CM procedure codes.

Response: None of the suggested alternatives adequately address the shortcomings of ICD–9–CM that were identified and discussed in the August 22, 2008 proposed rule. The majority of commenters supported our analysis of these shortcomings. As we noted in the August 22, 2008 proposed rule (73 FR 49827), we do not believe that extending the life of ICD–9–CM by assigning codes to unrelated chapters or purging and reassigning codes that are no longer used is a long-term solution, and it would perpetuate confusion for coders and data users if hierarchy and code set structure were to continue to be set aside in the issuance of new codes. Gaining space in ICD–9–CM by annually purging codes that are not used is problematic because, while it creates space, this space may not necessarily be in the same chapters in which codes are needed. As no one asserted that this purging process would open up sufficient capacity to assign new codes

in the hierarchical sections in which the new codes ought to be placed, purging and reassigning might only lead to coder confusion and further contribute to the hierarchical instability of the code set. Moreover, such action would destroy the ability to perform longitudinal research.

Modifying the existing ICD–9–CM code sets by adding more digits and/or alpha characters was discussed as a possible alternative to adoption of the ICD–10–CM and ICD–10–PCS code sets at public meetings of the ICD–9–CM Coordination and Maintenance Committee; however, there appears to be little industry support for this alternative. The disruption resulting from adding a digit and/or alpha character to the ICD–9–CM code set, and then trying to both refine and modify approaches to assigning codes would result in nearly the same costs in infrastructure and systems changes as a transition to ICD–10–PCS, but with no significant improvement in the coding system.

In the August 22, 2008 proposed rule (73 FR 49804), we explained that we did not consider the CPT–4 coding system to be a viable alternative to ICD–10–CM and ICD–10–PCS code sets because CPT does not adequately capture facility-based, non-physician services, and commenters did not offer any new information to support that approach.

In the August 22, 2008 proposed rule, we did not propose the replacement of CPT with ICD–10–PCS in the ambulatory setting. In the August 17, 2000 final rule (65 FR 50312), we adopted the HCPCS and CPT codes as the official procedure coding systems for outpatient reporting. ICD–9–CM procedure codes are not a HIPAA standard for coding in these settings, and while some hospitals may elect to double code their outpatient records using both HCPCS and CPT, as well as ICD–9–CM procedure codes for internal purposes, this is not a requirement. We do not encourage this type of double coding, and do not believe that this voluntary practice impacts the analysis of whether or not ICD–10–PCS should be adopted.

We discussed waiting to adopt the ICD–11 code set in the August 22, 2008 proposed rule (73 FR 49805), noting that the World Health Organization (WHO) has only begun preliminary work on ICD–11. There are no firm timeframes established for completion of the ICD–11 developmental work, testing or release for use date. We are aware of reports that the WHO's alpha version of ICD–11 may be available for testing in 2010, with possible approval of ICD–11 for general worldwide use in 2014. However, work cannot begin on developing the necessary U.S. clinical modification to the ICD–11 diagnosis codes or the ICD–11 companion procedure codes until ICD–11 is officially released. Development and testing of a clinical modification to ICD–11 to make it usable in the United States will take an estimated additional 5 to 6 years. We estimated that the earliest projected date to begin rulemaking for implementation of a U.S. clinical modification of ICD–11 would be the year 2020.

The suggestion that we wait and adopt ICD–11 instead of ICD–10–CM and ICD–10–PCS does not consider that the alpha-numeric structural format of ICD–11 is based on that of ICD–10, making a transition directly from ICD–9 to ICD–11 more complex and potentially more costly. Nor would waiting until we could adopt ICD–11 in place of the adopted standards address the more pressing problem of running out of space in ICD–9–CM Volume 3 to accommodate new procedure codes.

Finally, the development of a United States Disease-Entity Coding System (USDECS), which would involve developing a totally new classification system not based on any previous classification system platforms, would require even more time than implementing ICD–11, and would also hamper efforts to evaluate United States data in the context of other countries' experiences.

Comment: A few commenters stated that HHS needs to ensure that the use of ICD–10–CM and ICD–10–PCS code sets will not conflict with other federally recognized standards.

Response: We assume the commenter is referring to Secretarially recognized interoperability standards recommended by the Healthcare Information Technology Standards Panel (HITSP), a cooperative partnership between the public and private sectors formed to harmonize and integrate standards that will meet clinical and business needs for sharing information among organizations and systems. In some HITSP interoperability specifications, including those for Electronic Health Records, Laboratory Results Reporting and Biosurveillance, HITSP has defined or identified specific interoperability standards, including use of SNOMED–CT®, to support interoperability of systems. As discussed in the August 22, 2008 proposed rule (73 FR 49803), ICD–10–CM and ICD–10–PCS are classification coding systems while SNOMED–CT® is a clinically complex terminology standard. As we noted in the August 22, 2008 proposed rule, we do not believe that SNOMED–CT® is a suitable standard for reporting medical diagnoses and hospital inpatient procedures for purposes of administrative transactions. The numerous codes would be impractical to assign manually and are not suited to the secondary purposes for which classification systems like ICD–10 codes are used because of their size and considerable granularity, complex hierarchies, and lack of reporting rules. (See 73 FR 49803–49804). SNOMED–CT® is not a substitute for ICD–10 as a coding system, but, as further noted in the August 22, 2008 proposed rule, the benefits of using SNOMED–CT® increase if such use is linked to a classification system such as ICD–10–CM and ICD–10–PCS. Mapping would be used to link SNOMED–CT® to ICD–10 code sets. Plans are underway to develop these crosswalks, so a transition to ICD–10 code sets will ultimately facilitate realizing the benefits of using the specified interoperability standards including SNOMED–CT®. Moreover, it is the promulgation of regulations, and not the HITSP process, that dictates which standards are ultimately to be used for administrative transactions.

Comment: A number of commenters stated that quality performance measures currently used for programs such as the Physician Quality Reporting Initiative (PQRI) are based on ICD–9–CM diagnosis codes, and it is unclear how the change to ICD–10 would impact those programs.

Response: We anticipate that the use of ICD–10–CM, with its greater detail and granularity, will greatly enhance our capability to measure quality outcomes. We acknowledge that quality performance outcome measures are currently used for high-profile initiatives such as the hospital pay-for-reporting program. The greater detail and granularity of ICD–10–CM and ICD–10–PCS will also provide more precision for claims-based, value-based purchasing initiatives such as the hospital-acquired conditions (HAC) payment policy. Crosswalks that allow the industry to convert ICD–9–CM codes into ICD–10–CM and ICD–10–PCS codes (and vice versa) are already in existence. These crosswalks and others that are developed during the implementation period will allow the industry to convert payment systems, HAC payment policies, and quality measures to ICD–10. We note that, under this rule, ICD–10 codes will not be implemented as a HIPAA code set until 2013. Programs that offer incentives that are based on performance outcome measures that may be impacted by the changeover from ICD–9–CM to ICD–10–CM will

have sufficient time to plan for a smooth transition to ICD–10 coding. Our own such preparation will include ICD–10 updates to the quality measures as part of our routine regulatory process.

B. Compliance Date

In the August 22, 2008 proposed rule, we proposed October 1, 2011 as the compliance date for ICD–10–CM and ICD–10–PCS code sets for all HIPAA covered entities. To illustrate our implementation timeline for preliminary planning purposes, we also published in the proposed rule (73 FR 49807) a draft implementation timeline for both Version 5010 and ICD–10–CM and ICD–10–PCS.

Comment: While an overwhelming majority of commenters favored adoption of ICD–10–CM and ICD–10–PCS, they expressed many different positions regarding the compliance date. Most commenters disagreed with the proposed October 1, 2011 compliance date, stating that it did not provide adequate time for industry to train coders and complete systems changeovers and testing.

In general, commenters expressed particular concern about the industry's ability to implement both ICD–10 and the concurrently proposed X12 Version 5010 transactions standards (Version 5010) in the proposed timeframe. The commenters pointed out that this timeframe would jeopardize plans' ability to process claims and could therefore result in more unpaid or improperly paid claims. They also pointed out that this compliance date would provide less time for adopting ICD–10–CM and ICD–10–PCS than the actual amount of time it took industry to implement other HIPAA standards, including the National Provider Identifier. One commenter proposed incentive payments to HIPAA covered entities to help them achieve compliance given the short compliance timeframe.

NCVHS' September 26, 2007 recommendation on the implementation of Version 5010 and ICD–10 was frequently cited by commenters as being the benchmark against which they measured their own recommendations. Some commenters stated that we should further consider the NCVHS recommendation to the Secretary that there be a 2-year time gap between the finalization of the implementation of Version 5010, and compliance with ICD–10. A number of commenters interpreted the NCVHS recommendation as being that of a 3-year time gap, and cited that as their basis for supporting a 2013 or in some instances, a 2014 compliance date for ICD–10.

In fulfillment of part of its HIPAA-mandated responsibilities, NCVHS submitted recommendations to HHS that suggested establishing two different levels of compliance for the implementation of ICD–10–CM and ICD–10–PCS codes sets relative to compliance with Version 5010. ''Level 1 compliance,'' as interpreted by NCVHS, would mean that the HIPAA covered entity could demonstrate that it could create and receive ICD–10–CM and ICD–10–PCS compliant transactions. ''Level 2 compliance,'' as interpreted by NCVHS, would mean that HIPAA covered entities had completed end-to-end testing with all of their trading partners. NCVHS further recommended that no more than one implementation of a HIPAA transaction or coding standard be in Level 1 at any given time, which tacitly suggests that Level 2 testing for Version 5010 could, in NCVHS' estimation, reasonably take place concurrently with initial Level 1 activities associated with ICD–10 implementation.

As commenters noted, the NCVHS letter stated that ''it is critical that the industry is afforded the opportunity to test and verify Version 5010 up to two years prior to the adoption of ICD–10.'' The letter's Recommendation 2.2 further states that ''HHS should take under consideration testifier feedback indicating that for Version 5010, two years will be needed to achieve Level 1 compliance.''

A small number of commenters supported the proposed October 1, 2011 implementation date. They believed that the date was achievable, and stressed that the benefits of ICD–10 are so significant that an aggressive implementation timetable was justified because it would make additional information available that would support health care transparency, and thereby benefit patients, and that further delays in implementation would result in increased implementation costs. Others simply stated that the time had come for the U.S. to catch up with the rest of the world in using ICD–10.

A smaller number of commenters supported an implementation date of October 1, 2012. They, too, cited the benefits of ICD–10, and argued that a one-year postponement of the proposed October 2011 date would provide sufficient time in which the industry could achieve compliance with ICD–10–CM and ICD–10–PCS. A few commenters explicitly noted that a 2012 implementation date would allow them adequate time to budget and plan for the changeover. Other commenters stated that ICD–10 compliance should come no earlier than October 2012; and still others recommended an October 2012 compliance date if such a compliance date would allow for a 3-year implementation timetable for ICD–10 following the Version 5010 compliance date.

A number of commenters suggested a compliance date of October 2013, citing insufficient time in which to install and test ICD–10–CM and ICD–10–PCS within their claims processing and other related IT systems, the need for coder and provider education and outreach, and the time needed for implementation of previous HIPAA standards. These commenters stated that an October 2013 date would afford them with the minimum of 2 years after implementing Version 5010 that they said they needed in order to comply with ICD–10–CM and ICD–10–PCS. The compliance date must occur on October 1 of any given year in order to coincide with the effective date of the annual Medicare Inpatient Prospective Payment System (IPPS). A number of commenters supported a 2013 compliance date as more realistic than the proposed 2011 date, and urged that we move quickly to publish a final rule to adopt ICD–10–CM and ICD–10–PCS. Other commenters simply noted that 2013 was a reasonable date that would allow more time for effective implementation and training on the proper use of code sets. Commenters noted that this date should give HIPAA covered entities sufficient time to fully implement Version 5010 before moving on to ICD–10. A few other commenters noted that the compliance date for ICD–10 should not be any earlier than 2013.

The majority of commenters, including individual providers and industry associations, supported a compliance date of October 1, 2014 which they said could be less costly, allow more time for education, and would better ensure that the desired benefits of the ICD–10–CM and ICD–10–PCS code sets are achieved. The majority of submissions that supported a 2014 compliance date were form letters submitted by members representing the position of one industry professional association.

A few commenters suggested an implementation date of October 1, 2015 or beyond, once again citing their perceptions of the high cost of the transition to ICD–10–CM and ICD–10–PCS, and the need for extensive education and training.

Other commenters did not propose a specific compliance date, but rather indicated the need for 3 years after the Version 5010 compliance date. Other

commenters suggested that 95 percent of covered entities be successfully converted to Version 5010 prior to the start of ICD–10 implementation.

One commenter stated that the adoption of ICD–10–CM should be delayed until the Diagnostic and Statistical Manual of Mental Disorders, Fifth Edition (DSM–V) has been released.

Response: We recognize that the compliance date issue is crucial to the successful implementation of ICD–10. We have assessed the comments carefully, balancing the benefits of earlier implementation against the potential risk of establishing a deadline that does not provide adequate time for successful implementation and thorough testing. We cannot consider a compliance date for ICD–10 without considering the dependencies between implementing Version 5010 and ICD–10. We recognize that any delay in attaining compliance with Version 5010 would negatively impact ICD–10 implementation and compliance. The lack of information on cost estimate impacts also supports a later ICD–10 compliance date to allow the industry to spread out any unanticipated costs over a longer period of time.

Pursuant to a regulation published in this same edition of the **Federal Register**, the Version 5010 compliance date has now been established as January 2012, to afford the industry an additional year, for a total of 3 years to achieve compliance with Version 5010.

From our review of the industry testimony presented to NCVHS and comments received on our August 22, 2008 proposed rule, it appears that 24 months (2 years) is the minimum amount of time that the industry needs to achieve compliance with ICD–10 once Version 5010 has moved into external (Level 2) testing.

We believe that the spirit and intent of the NCVHS letter recommends that the Secretary move the industry forward on the adoption and implementation of, and compliance with, Version 5010 and the ICD–10–CM and ICD–10–PCS code sets. At the same time, NCVHS recognizes the wide-reaching impacts of the transition to ICD–10–CM and ICD–10–PCS, and in doing so, implies that any implementation plans and timetables should be structured as to be realistic for the industry as a whole.

In establishing the ICD–10 compliance date, we have sought to select a date that achieves a balance between the industry's need to implement ICD–10 within a feasible amount of time, and our need to begin reaping the benefits of the use of these code sets; stop the hierarchical deterioration and other problems associated with the continued use of the ICD–9–CM code sets; align ourselves with the rest of the world's use of ICD–10 to achieve global health care data compatibility; plan and budget for the transition to ICD–10 appropriately; and mitigate the cost of further delays.

We believe that an October 1, 2013 ICD–10 compliance date achieves that balance, being 2 years later than our proposed October 2011 ICD–10 compliance date and providing a total of nearly 5 years from the publication of the Version 5010 final rule through final compliance with ICD–10. The 32 months from completion of Level 1 testing for Version 5010 in January 2011 (at which point Level 1 ICD–10 activities can begin) to the October 1, 2013 compliance date for ICD–10 should allow the industry ample time to effect systems changeovers and testing so as to become fully compliant with the ICD–10–CM and ICD–10–PCS code sets.

We note that those requesting compliance dates of 2014 and later did not suggest methods for mitigating the negative effects of delaying compliance, including the increased implementation costs which may result from the increase in the number and size of legacy systems that will need to be updated; delay in achieving the benefits identified in the August 22, 2008 proposed rule; and the impacts of continued degradation of the code sets.

We further note that many health plans supported a 2013 compliance date. Since the complexity of ICD–10 implementation will be much higher for health plans (because after health plans update systems to utilize ICD–10 codes, they will also have to develop claims processing edits based on those codes) than for individual providers and coders, we take the support of health plans for a 2013 compliance date as an indication of the reasonableness of this timeline.

It is also important to note that, while NCVHS recommended that Level 1 activities for Version 5010 and ICD–10 should not overlap, it is inevitable that, as covered entities embark on requirements analysis for Version 5010, they will identify ICD–10 issues as a natural offshoot of those efforts. Thus, even if entities choose not to begin full-scale ICD–10 implementation efforts until Version 5010 has reached Level 2 compliance, they will likely begin that phase with a preexisting knowledge base about ICD–10, and will also have identified lessons learned and best practices that will inform those later activities.

We also note that the Diagnostic and Statistical Manual of Mental Disorders, Fifth Edition (DSM–V) is projected to be released in 2012 by the American Psychiatric Association (APA). CDC is working with APA to ensure that ICD–10–CM and DSM–V codes match, and that the timing of this projected release would conform with the commenter's request that the ICD–10 compliance date occur after the release of DSM–V.

We are adopting the ICD–10–CM and ICD–10–PCS as medical data code sets under HIPAA, replacing ICD–9–CM Volumes 1 and 2, and Volume 3, with a compliance date of October 1, 2013, and have updated the draft ICD–10/Version 5010 implementation timeline which previously appeared in the proposed rule (73 FR 49807) to read as follows:

TIMELINE FOR IMPLEMENTING VERSIONS 5010/D.0 AND ICD–10

Version 5010/D.0	ICD–10
01/09: Publish final rule	01/09: Publish Final Rule
01/09: Begin Level 1 testing period activities (gap analysis, design, development, internal testing) for Versions 5010 and D.0.	
01/10: Begin internal testing for Versions 5010 and D.0.	
12/10: Achieve Level 1 compliance (Covered Entities have completed internal testing and can send and receive compliant transactions) for Versions 5010 and D.0.	
01/11: Begin Level 2 testing period activities (external testing with trading partners and move into production; dual processing mode) for Versions 5010 and D.0.	01/11: Begin initial compliance activities (gap analysis, design, development, internal testing).

TIMELINE FOR IMPLEMENTING VERSIONS 5010/D.0 AND ICD–10—Continued

Version 5010/D.0	ICD–10
01/12: Achieve Level 2 compliance; Compliance date for all covered entities. This is also the compliance date for Version 3.0 for all covered entities except small health plans*.	
	10/13: Compliance date for all covered entities.

Note: Level 1 and Level 2 compliance requirements only apply to Version 5010, NCPDP Telecommunication Standard Version D.0, and NCPDP Medicaid Subrogation Standard Version 3.0.

Comment: One commenter stated that the October 1 compliance date should be changed to better align with the health care industry's regularly scheduled annual system changeovers.

Response: The commenter did not reference specific system changeovers, suggest an alternative date, or specify the regularly scheduled system changes to which it refers, so we are unable to assess the validity of the comment. We received no other comments opposed to an October 1 date. The October 1 date was selected to ensure that the ICD–10 compliance date would coincide with the effective date of the Medicare IPPS update.

Comment: A number of commenters urged that the compliance date for the HIPAA health care claims attachment standard not coincide with the Level 1 implementation activities related to either Version 5010 or ICD–10.

Response: We will take this into consideration in establishing a compliance date in the health care claims attachment standard final rule.

C. Implementation Period

Comment: A minority of commenters disagreed with our proposal to establish a single compliance date for ICD–10. Some commenters suggested a variety of alternatives for phased-in or staggered implementation of the ICD–10–CM and ICD–10–PCS code sets in order to alleviate the impact of implementation. A number of these commenters suggested that we allow ''dual processing'': in other words, acceptance of either ICD–9 or ICD–10 code sets on any given claim for a specified period of time. They expressed concern about having a single date on which all covered entities would have to convert to ICD–10, and stressed the need for testing between trading partners to ensure that claims are properly processed. They also pointed out that covered entities would have to maintain dual processes in any case to process old claims.

Other commenters proposed that the ICD–10–CM diagnosis and ICD–10–PCS procedure codes be implemented at different times. A few commenters suggested adopting other nations' approaches to implementing ICD–10 such as those used in Canada and Australia, specifically, staggered implementation of the new codes either by geographic region, by covered entity category, and/or allowing for a later implementation date for small entities.

Other commenters pointed out that diagnosis and procedure codes affect the amount of payment, and that dual processing (that is, the possibility that a claim for services provided on a given date being processed for reimbursement at two different rates based on two code sets) would add significant complexity.

Response: Implementation of ICD–10 will require significant business and technical changes for all covered entities.

We acknowledge that ICD–9–CM codes will continue to be used only for the period of time during which old claims (those with dates of service prior to October 1, 2013) continue through the payment cycle. We do not believe that this period during which covered entities will be maintaining the ability to work in two code systems is what commenters meant by ''dual processing.'' Rather, we believe that commenters utilized the term ''dual processing'' to mean the provider's ability to use their own discretion in deciding whether to submit claims using ICD–9 or ICD–10 code sets after the October 1, 2013 compliance date. Such use of more than one code set for coding diagnoses or procedures, whether in a medical record or claim, would cause significant business process duplication. It could result in different information being shared about a patient because the ICD–10 code set is so much more robust than ICD–9, and the code for a given diagnosis/procedure does not necessarily match one code to one code between the code sets.

While HHS could elect to provide for some sort of ''staggered'' implementation dates, we have concluded that it would be in the health care industry's best interests if all entities were to comply with the ICD–10 code set standards at the same time to ensure the accuracy and timeliness of claims and transaction processing.

We agree with commenters that maintenance of two code sets for a significant span of time such that, on any specific date of service in that time frame one could submit, process and/or receive payment on a claim based on ICD–9–CM or the ICD–10–CM and ICD–10–PCS code sets would raise considerable logistical issues and add to the complexity of the ICD–10 code set implementation. One would need to employ/operate duplicate coding staffs and systems. For example, we understand that Medicare's systems will not allow the use of two different code sets for services provided on the same date, and we presume that other covered entities' systems were likewise not designed with such capacities. Even if such coding and processing capabilities were available, the biller would have to ensure that claims indicated the coding system under which they were generated, and the recipient would need to put measures in place to avoid processing on the wrong system. We believe that this would impose a very significant burden on plans and providers/suppliers. The availability and use of crosswalks, mappings and guidelines should assist entities in making the switchover from ICD–9 to ICD–10 code sets on October 1, 2013, without the need for the concurrent use of both code sets in claims processing, medical record and related systems with respect to claims for services provided on the same day. Furthermore, although the Act gives the Secretary the authority to extend the time for compliance for small health plans if the Secretary determines that it is appropriate, we believe that different compliance dates based on the size of a health plan would also be problematic, since a provider has no way of knowing if a health plan qualifies as a small health plan or not.

As stated in the August 22, 2008 proposed rule (73 FR 49806), a phased-in implementation of ICD–10 that allows for payment systems to accept both ICD–9 and ICD–10 codes for services rendered on the same day would constitute a significant burden on the industry. We continue to believe that, based on our previous HIPAA standards implementation experience

and in consideration of the complexities of the U.S. health care system's multi-payer system, allowing both code systems to be used and reported at the same time (i.e., for services/procedures performed on the same day) would create confusion in processing and interpreting coded data, and claims could likely be denied for services, or returned as errors if processing errors resulted in edits that indicated too many or too few digits. It would be more costly for the various health care payment systems used in the United States to accept and process claims with both ICD–9 and ICD–10 code sets. Providers would have to maintain both coding systems, and there would be significant system implications in trying to determine which coding system was being used to report the coded data.

Adopting diagnosis and procedure codes at different times would result in similar system problems, namely pairing an ICD–9 diagnosis code with an ICD–10 procedure code, or vice versa. For more examples of problems associated with maintaining the two coding systems concurrently, please refer to the August 22, 2008 proposed rule (73 FR 49806).

Allowing the industry to use ICD–10–CM and ICD–10–PCS codes voluntarily would also result in confusion. Systems would not be able to recognize whether the code was an error made in an ICD–9 code entry, or actually an ICD–10 code, again causing rejection errors.

We continue to believe it is in the industry's best interest, and that includes small health plans, to have a single compliance date for ICD–10–CM and ICD–10–PCS. This will reduce the burden on both providers and insurers who will be able to edit on a single new coding system for claims received for encounters and discharges occurring on or after October 1, 2013, instead of having to maintain two coding systems over an extended period of time. Providers and insurers would use ICD–9–CM edits and payment logic for claims relating to encounters and discharges occurring prior to the date of compliance, and the ICD–10–CM and ICD–10–PCS edits and payment logic for all claims relating to encounters and discharges occurring on or after the ICD–10 compliance date. They would not have the burden of selectively applying either the ICD–9–CM or ICD–10–CM edits and logic to claims before the compliance date, and as a result, we have not established dates for Level 1 and Level 2 testing compliance for ICD–10 implementation. We encourage all industry segments to be ready to test their systems with ICD–10 as soon as it is feasible. We believe that the October 1, 2013 compliance date will allow various payment systems to correctly edit the codes and make payments based on the payment and coding system in effect at that time, and is sufficiently far in the future to provide all sectors of the industry adequate time to implement the code sets.

As described in section XI.D of the August 22, 2008 proposed rule (73 FR 49827), a number of phase-in compliance options for ICD–10–CM and ICD–10–PCS were considered and rejected because of the nature of the U.S. multi-payer system. Phased-in ICD–10–CM and ICD–10–PCS compliance based on staggered dates set by geography over extended periods of time would require plans (especially national plans), and possibly multi-state chain or national providers/suppliers or health care entities that were vertically integrated, to maintain and operate both ICD–9 and ICD–10 coding systems for an extended period of time. The time frame during which covered entities will need to learn and use the new ICD–10 codes, while at the same time continuing to work with the old ICD–9 codes, should be minimized because during this period there is an increase in the chance of errors in payments, and such confusion and uncertainty in the provider/supplier community could result in undesirable delays in processing claims that should be avoided to the extent possible. We believe that maintaining dual systems concurrently for an extended period of time would impose a very significant burden on plans and providers/suppliers. In the August 22, 2008 proposed rule (73 FR 49827), we also referenced the Canadian and Australian experience with their geographic phased-in ICD–10 implementation approach, and the problems they reported that were inherent in that approach. We have received no new information on other countries' experience with the implementation of their respective version of ICD–10 that would lead us to reverse our initial conclusion that a phased-in approach based on geographic boundaries is not in the best interests of the industry. Therefore, in consideration of the many problems inherent with these phased-in and/or staggered implementation alternatives, we are adopting October 1, 2013 as the compliance date for the ICD–10–CM and ICD–10–PCS medical data code sets.

D. Date of Admission Versus Date of Discharge Coding

Comment: We proposed to follow the current practice of implementing new code set versions effective with the date of service, which for purposes of inpatient facilities means the medical codes in effect at the time of patient discharge. For example, if a patient is admitted in September and the patient is discharged on or after the October 1 compliance date, the hospital would have to assign the codes in effect on October 1. Several commenters requested that inpatient hospital facilities use the version of the codes in effect at the date of admission instead of the date of discharge because this would benefit inpatient facilities that use interim billing. They proposed that hospitals that did not use interim billing could continue to use the date of discharge for determining the version of ICD code sets to be used for coding.

Response: It has been a long standing practice for inpatient facilities to use the version of ICD codes in effect on the date of discharge. Most hospitals do not code their records for billing purposes until the patient is discharged. Much information is gathered through the process of inpatient treatment. Tests are performed, surgeries may be completed, and additional diagnoses may be assigned. Therefore, the documentation is more complete by the time a patient is discharged. At this point the hospital coder assigns the codes that are in effect on the date of discharge. All of our national inpatient data is based on this practice. We do not agree that changing this practice would be of benefit to hospitals, and maintain that the opposite would be true, and is counter to the implementation of a single, consistent ICD–10 implementation date. Furthermore, using the date of admission for some types of claims coding, and date of discharge for other types of claims coding would also greatly disrupt national data and create problems in analyzing what has, until this point in time, been a consistent approach to coding medical records. Hospitals engaged in interim billing will not see any change from their current practices. They will continue to use the code set in effect for services occurring prior to October 1, 2013 and will use the next year's update (in this case, ICD–10–CM and ICD–10–PCS for 2013) for services occurring on or after October 1, 2013.

Therefore, we will not change the current practice followed by inpatient facilities of coding based on the date of discharge.

E. Coding Guidelines

Comment: Several commenters expressed the need for ICD–10 coding guidelines to be developed and maintained. Some commenters incorrectly pointed out that guidelines

were not available, while others were aware of the ICD–10 guidelines that are posted on the CMS and CDC Web sites. Commenters expressed concern that the ICD–10–CM guidelines on CDC's Web page were created in 2003, and stated that they are ''draft'' guidelines that have not been updated. Commenters further indicated that this lack of finalized coding guidelines will make it difficult for software and systems vendors to develop ICD–10 products and for covered entities to begin training staff. Commenters also stated that there should be a single, authoritative source for ICD–10 coding guidelines to avoid variations in the interpretation and use of the codes. These commenters questioned whether the implementation of ICD–10 should be delayed until such time as the guidelines can be updated.

Response: We agree that it is important to have an official set of ICD–10 coding guidelines, and that they be properly maintained. CMS, CDC, AHA and AHIMA joined forces some time ago under a long-standing memorandum of understanding to develop and approve the guidelines for ICD–9–CM code set coding and reporting. These ''Cooperating Parties'' conduct annual reviews of these guidelines and develop new guidelines as needed, considering stakeholder input obtained through public meetings of the ICD–9–CM Coordination and Maintenance Committee, and through input submitted from AHA and AHIMA members. Only those guidelines approved by the Cooperating Parties are official and posted to CDC and CMS Web sites, and this has proven to be an effective approach to guideline development and maintenance. The Cooperating Parties will finalize a 2009 version of the Official ICD–10–CM coding guidelines, which will be posted to CDC's Web site in January 2009. Updated coding guidelines for ICD–10–PCS are included in the Reference Manual already posted to CMS' Web site at *http://www.cms.hhs.gov/ICD10/Downloads/pcs_refman.pdf*. Given the imminent availability of updated coding guidelines, we do not believe that it would be appropriate to further delay the adoption of the ICD–10 code sets pending the issuance of the updated guidelines.

F. ICD–10 Mappings and Crosswalks

Comment: Many commenters emphasized the importance of reliable crosswalks between ICD–9–CM and ICD–10–CM and ICD–10–PCS. Some commenters incorrectly stated that there were no crosswalks available between ICD–9–CM and ICD–10–CM and ICD–10–PCS diagnosis and procedure codes and pointed out the importance of such crosswalks for implementation. Other commenters stated that they would require ''additional bi-directional mapping developed by a single authoritative national source prior to implementation,'' to prevent loss of data integrity. Commenters expressed concern about possible crosswalk and mapping errors, the lack of a crosswalk between ICD–10–CM and the ICD–10 code set for international data comparability, and about the ability of available crosswalks to serve as a useful tool in data conversion. Some commenters stated there should be an extension of the timeline for ICD–10 compliance due to the limited availability and utility of the existing crosswalks. Several commenters recommended that HHS inform industry stakeholders how often these mappings will be updated and how they will be maintained. One commenter asked whether companies may develop their own proprietary mapping systems and if this could impact the compliance dates. We also received a comment that, if ICD–10 is implemented, we should provide a crosswalk between the Ambulatory Payment Classification (APC) groups and the Medicare Severity—Diagnosis Related Groups (MS–DRGs).

Response: We agree that crosswalks between ICD–9–CM and ICD–10–CM and ICD–10–PCS will be critical. Section 1174(b)(2)(B)(ii) of the Act states that if a code set is modified under this subsection, the modified code set shall include instructions on how data elements of health information that were encoded prior to the modification may be converted or translated so as to preserve the informational value of the data elements that existed before the modification. Any modification to a code set under this subsection shall be implemented in a manner that minimizes the disruption and cost of complying with such modification.

In anticipation of that possible need if/when ICD–10 code sets were to be adopted, authoritative, detailed bi-directional (that is, they can be used to translate from the old code to the new, or from the new to the old) crosswalks, or mappings, which we refer to as General Equivalency Mappings (GEMs), have been developed between ICD–9–CM Volumes 1 and 2 and ICD–10–CM and the ICD–9–CM Volume 3 and ICD–10–PCS. These mappings were developed with stakeholder input into their creation and maintenance, and discussed at public meetings of the ICD–9 Coordination and Maintenance Committee.

CDC developed one such bi-directional mapping between ICD–9–CM diagnosis codes and ICD–10–CM. This mapping, and an accompanying guide explaining how to use the mapping, are available on CDC's Web page at *http://www.cdc.gov/nchs/about/otheract/icd9/icd10cm.htm*, as well as the CMS Web page at *http://www.cms.hhs.gov/ICD10/02_ICD–10-PCS.asp*.

CMS developed bi-directional mappings between ICD–9–CM Volume 3 and ICD–10–PCS, along with an accompanying guide explaining how to use the 2008 mappings, which are posted to the CMS Web page at *http://www.cms.hhs.gov/ICD10/01m_2009_ICD–10-PCS.asp#TopOfPage.*

CDC's mapping was highly successful as a clinical equivalent was reported to be possible in all but 0.6 percent of ICD–10–CM codes. In those 0.6 percent of ICD–10–CM codes, a new diagnosis concept was introduced into ICD–10–CM that was not previously found in ICD–9–CM. Therefore, in 0.6 percent of the ICD–10–CM codes, there were no similar codes in ICD–9–CM to which the ICD–10–CM code could be mapped, and this is clearly indicated in the GEM mappings. However, there are general equivalence mappings for over 99 percent of all ICD–10–CM codes and for 100 percent of the ICD–10–PCS codes. The ICD–9–CM Coordination and Maintenance Committee reported on the use of the GEM mapping in converting the MS–DRGs from ICD–9–CM to ICD–10–CM codes. A complete report of this activity is included in the September 24–25, 2008 ICD–9–CM Coordination and Maintenance Committee meeting summary which can be found at *http://www.cms.hhs.gov/ICD9ProviderDiagnosticCodes/03_meetings.asp#TopOfPage*.

The use of the GEM mappings to convert the MS–DRGs from ICD–9–CM to ICD–10 codes demonstrates that the GEM mappings are extremely accurate and useful. The GEM mappings were able to convert 95 percent of the ICD–9–CM diagnosis codes in the digestive part of the MS–DRGs to the appropriate ICD–10–CM and ICD–10–PCS codes. For these digestive system MS–DRGs, the GEM mappings automatically converted 99 percent of the ICD–9–CM digestive system diagnoses codes and 91 percent of the ICD–10–PCS procedure codes to the appropriate digestive system ICD–10 codes. Five percent required some additional analysis, and we believe that future experience will increase that rate of conversion. We trust that these will be of great assistance to the industry in converting payment, quality and other types of systems from ICD–9–CM to

ICD–10–CM and ICD–10–PCS and vice versa.

There may be value in annually revising these bidirectional mappings to allow for conversions between ICD–9–CM codes and the ICD–10–CM and ICD–10–PCS codes as the ICD–10 code sets are updated annually after their adoption. The ICD–9–CM Coordination and Maintenance Committee is the public forum used to discuss updates to ICD–9–CM and it will be used to discuss updates to the ICD–10 coding system, as well as the mapping between the systems. As previously discussed, this Committee will be re-named the ICD–10 Coordination and Maintenance Committee once ICD–10 is implemented. The Committee will continue to discuss issues such as mappings to the prior coding system, ICD–9–CM. The Committee will discuss the need to continue updating these mappings for a minimum of 3 years after the ICD–10–CM and ICD–10–PCS final compliance date. Should the industry recommend that this period be extended by several years, then we would anticipate that the mappings will continue to be updated through the auspices of the Committee, and will seek input from industry stakeholders through the Committee as to whether these mappings are beneficial to industry, and whether mappings to ICD–9–CM should be updated for an additional period of time.

CMS also has developed a reimbursement mapping that can be used to update payment systems that gives the ICD–10–CM code that best matches the previously used ICD–9–CM code. This reimbursement mapping will allow other payers to more quickly determine how they want to classify a particular ICD–10 code within their payment system. Should payers want to consider refinements to their payment systems based on the additional detail provided by ICD–10, they may do so. The complete ICD–10–CM and ICD–10–PCS GEMs may also assist in those cases where additional information is needed, which is not found in the more streamlined reimbursement mapping. For details of the discussion of the reimbursement mappings at the ICD–9–CM Coordination and Maintenance Committee, please access the CMS Web site at *http://www.cms.hhs.gov/ICD9ProviderDiagnosticCodes/03_meetings.asp#TopOfPage*.

CMS will post to this same Web site the reimbursement mapping file along with the 2009 versions of the GEMS and the 2009 version of ICD–10–PCS by the end of 2009. CDC will be posting the 2009 version of the ICD–10–CM GEMs to their Web site at *http://www.cdc.gov/nchs/about/otheract/icd9/icd10cm.htm* by the end of 2009.

CMS will use mappings to convert the Medicare-Severity Diagnosis Related Groups (MS–DRGs) from ICD–9–CM to ICD–10–CM and ICD–10–PCS. MS–DRGs are used by Medicare to determine hospital payments under the Inpatient Prospective Payment System (IPPS). This conversion was discussed at the September 24, 2008 ICD–9–CM Coordination and Maintenance Committee meeting. This presentation can be found at: *http://www.cms.hhs.gov/ICD9ProviderDiagnosticCodes/03_meetings.asp#TopOfPage*. We expect that CMS will have converted all MS–DRGs to ICD–10 by October 2009, and will share those results with payers and providers at a future ICD–9–CM Coordinating and Maintenance Committee meeting. The adoption of the final ICD–10 version of MS–DRGs will be subject to rulemaking. We encourage anyone who has particular concerns about possible errors in the crosswalks and/or mappings to share them with CMS and CDC through the ICD–9–CM Coordination and Maintenance Committee so that mappings can be updated as we move forward toward implementation.

We disagree that we should develop a crosswalk between APCs and MS–DRGs when ICD–10 is implemented. We do not have a crosswalk between the current APCs, which are based on CPT codes, and MS–DRGs, which are based on ICD–9–CM codes. The IPPS, which relies on MS–DRGs, and the hospital outpatient prospective payment system (OPPS), which relies on APCs, were developed to reimburse providers in different settings, are maintained separately, and undergo separate formal rulemaking each year.

Finally, CDC fully intends to produce a crosswalk between ICD–10 and ICD–10–CM, addressing the need for international data comparability, and this crosswalk will be completed and made available one year prior to the ICD–10 compliance date. CDC already uses ICD–10 to report cause of death, and it is anticipated that this crosswalk will be of great interest to those engaged in international data reporting.

Any additional tools will certainly assist in the implementation of ICD–10, and both CMS and CDC will continue to make improvements and refinements to their publicly available mappings and post them for others to use. Other vendors may develop products to assist in analyzing codes or converting data, but we do not see any reason why the availability of such products, whether proprietary or non-proprietary, would have any bearing on the determination of a final compliance date for ICD–10–CM and ICD–10–PCS.

G. ICD–10 Education and Outreach

Comment: Many commenters stated that the proposed October 2011 ICD–10 compliance date would not allow for proper industry education and outreach and that the tight timeline would constitute a major burden to the industry. Commenters expect that certified coders would need detailed education in order to identify the proper codes for accurate billing. Some commenters said regular physician office staff would need to become certified coders, and current certified coders would need to get recertified, incurring a costly exam fee.

Many commenters recommended that significant education and outreach for ICD–10 would be needed, and they suggested a number of strategies, including the need for national associations to collaborate on education efforts; a need for a consistent set of messages and/or materials from a national authoritative source; recognition that different audiences/entities (for example, inpatient hospital coders) may need different levels of training; that in-person training should supplement Internet training and printed documents; and that CMS should provide funding for ICD–10 training for State Medicaid program staff.

Response: As stated in the August 22, 2008 proposed rule (73 FR 49807), with the publication of this final rule, we will begin to proactively conduct outreach and education activities which include, but are not limited to, roundtable conference calls with industry stakeholders, development of FAQs, fact sheets, and other supporting education and outreach materials for industry partner dissemination. We also anticipate that there will be extensive industry-sponsored educational opportunities through various stakeholder associations. As part of our education and outreach efforts, we will work closely with industry stakeholders to make subject matter experts available to them, and to expeditiously help stakeholders disseminate relevant information at the national, regional and local level that will be useful to them in educating their respective members.

Comment: One commenter expressed the belief that implementing ICD–10 will exacerbate the current shortage of clinical coders. Other commenters stated that we did not account for the impact to formal training programs for degree and national certificates that will need to be updated or redeveloped.

Response: We have received no indication from industry and/or technical school representatives that the changeover from ICD–9 to ICD–10 codes might contribute to the existing shortage of clinical coders and, in fact, increased marketplace demand for coders as a result of the adoption of ICD–10–CM and ICD–10–PCS may lead to more enrollment in coding curriculums. School representatives have indicated their readiness to adapt to any needed ICD–10 curriculum changes and anticipate that they will be able to produce ''ICD–10 ready'' clinical coders upon graduation from their respective institutions. We anticipate that educational venues offering coding courses are already familiar with making annual updates to curriculums to reflect yearly code set revisions. The final compliance date of October 1, 2013 should afford educational institutions ample time to change their curriculums, seek out appropriate educational materials and related resources, and graduate ICD–10 competent coders.

Some hospitals may require coders to have a certification from a national professional association. While desirable, this does not appear to be a requirement for coders working in physician offices or other ambulatory settings. We understand that many certified coders must meet annual continuing educational requirements or authorities to maintain their certifications. As we have no coding certification requirements or authorities, we recommend that those concerned with future certification standards contact the applicable professional organizations.

We agree with commenters that it is important that consistent and accurate ICD–10–CM and ICD–10–PCS materials are developed to assist with national training and education. We also agree that it is important that educational training be a collaborative effort among all interested stakeholders. We will continue to collaborate with other stakeholder organizations on outreach and education on the transition from ICD–9 to ICD–10, taking into consideration the contextual and timing needs of different industry segments, including hospitals, providers, coders, etc., in a way that will ensure all affected entities have the resources needed to properly code.

Both AHA and AHIMA will take lead roles in developing additional, more detailed technical training materials for coders. AHA also plans to continue their training support activities by updating their education materials to ICD–10 and will change the name of their publication to Coding Clinic for ICD–10. AHA has announced that it will begin to include ICD–10 information in its Coding Clinic in advance of the actual ICD–10–CM and ICD–10–PCS implementation date.

CMS has been working collaboratively with the Cooperating Parties to develop additional ICD–10 educational materials which will be posted at: *http://www.cms.hhs.gov/ICD10/05_Educational_Resources.asp#TopOfPage.*

H. Testing

Comment: A minority of commenters stated that ICD–10–CM and ICD–10–PCS need more testing prior to implementation. Some commenters recommended pilot testing, with one of those commenters stating that pilot testing should take place before the issuance of a final rule, on the assumption that information gained through pilot testing could be used to inform the development of a final rule. A few commenters stated that more internal and external training would be needed beyond that which we described in the August 22, 2008 proposed rule. Another commenter said that additional time—between six months to a year—should be added to the final Version 5010 compliance date to allow for testing.

Response: Any pilot testing of ICD–10–CM and ICD–10–PCS would demonstrate its integration into business processes and/or systems, and not the appropriateness of its adoption as a HIPAA standard through the notice and comment rulemaking process. Furthermore, were pilot testing to demonstrate a need for additional codes, etc., these changes could be handled through the code set maintenance process, without the need for further rulemaking to accomplish such changes. Therefore, we see no reason to pilot test ICD–10–CM and ICD–10–PCS before issuing a final rule.

In the development of the August 22, 2008 proposed rule (73 FR 49807) draft timetable, we accounted for testing with both internal and external partners as part of the generally accepted industry implementation process for the implementation of these medical data code sets as adopted HIPAA standards. This follows similar implementation plans undertaken for previously adopted and implemented HIPAA standards. Such testing is a way to determine whether, once systems changeovers are in place, transactions using the ICD–10–CM and ICD–10–PCS code sets would be successfully and accurately processed within a HIPAA covered entity's own systems, as well as whether that entity can successfully transmit such information from its own system to a trading partner. We welcome the opportunity to work with industry on any voluntary testing of the workflows, productivity, and other practical considerations of the changeover from ICD–9–CM to ICD–10–CM in the ambulatory setting that could result in the development of ''lessons learned'' that might be disseminated to assist this industry segment with a smooth transition to ICD–10.

With regard to testing the utility of the ICD–10–CM and ICD–10–PCS code sets themselves, we refer to the results of the AHA–AHIMA ICD–10–CM field testing reported to NCVHS on September 23, 2003, involving 6,177 medical records coded by credentialed coding professionals. A copy of this report can be found at *http://www.ncvhs.hhs.gov/030923ag.htm.*

We believe that there has been successful, independent field testing of the utility and functionality of ICD–10–CM and ICD–10–PCS, and that no additional testing of this nature is necessary.

I. ICD–10 Code Set Development and Utility

Comment: Several commenters stated that countries such as Canada and Australia have not developed such extensive clinical modifications to medical code sets compared to those used in the U.S. because their versions of the ICD–10 code sets are not used in ambulatory settings. Commenters recommended that a process be undertaken to streamline and/or significantly reduce the number of ICD–10 codes to make adoption easier.

Response: Unlike the United States, other countries do not use ICD–10 codes for reimbursement purposes. The level of detail in the United States' clinical modification version of the ICD–10 code set has resulted in an increased number of codes, and is commensurate with the complexities of our multi-payer health care system. The United States' clinical modifications have been derived in part with the input of clinical specialty groups that have requested this level of specificity. If the United States is moving toward an electronic healthcare system and increasingly using codes for quality purposes, there is a need to capture more precise information, not less. ICD–10–CM and ICD–10–PCS will greatly support these efforts.

The Canadian health care system and the United States health care system are very different. Canada does not have the same data needs as the United States. The Canadian version of ICD–10, called ICD–10–CA, has been implemented in hospitals, hospital-based ambulatory care centers, day surgery centers and

high-cost clinics (for example, dialysis and cancer clinics). National ambulatory care reporting has not been fully implemented in Canada, but some provinces have already expanded the use of ICD–10–CA beyond hospital-based ambulatory care. ICD–9–CM was never implemented in physician offices in Canada because each province had its own billing system, but the provinces now fully intend to do so, and are moving in that direction.

Each country uses its respective version of ICD–10 for its own purpose, but common threads from other countries' ICD–10 implementation experiences, such as systems changeovers, business process issues and the timing of their conversions to ICD–10, can help inform our ICD–10 implementation experience in the United States. An increased number of codes does not necessarily result in increased complexity in using the coding system. Though training would be required in order to make full use of the increased number and granularity of the codes, greater specificity can mean the correct code is easier to determine because there is less ambiguity. Not all HIPAA covered entities will use all of the ICD–10–CM and ICD–10–PCS codes. Similar to the way a dictionary is utilized, ICD–10–CM and ICD–10–PCS make available a full spectrum of codes, and entities will selectively use only those codes that are germane to their specific clinical area of practice or healthcare operations.

We are also aware that, in many instances in the ICD–10–CM code set, the 7th character is repetitive in nature. Taking this into account, the remainder of the core codes amount to far fewer new codes to learn. Therefore, we do not believe that reducing the number of ICD–10–CM and ICD–10–PCS codes to make adoption easier is warranted, nor do we believe that the code sets' size is a justification for not implementing ICD–10–CM and ICD–10–PCS in a timely manner.

Comment: Some commenters stated that the ability to demonstrate laterality already exists through modifiers available for use with ICD–9–CM that allow the capture of duplicate claims.

Response: In the August 22, 2008 proposed rule (73 FR 49801), we defined laterality as the ability to specify which organ or part of the body is involved when the location could be on the right, left or bilateral. The advantage of ICD–10–CM over ICD–9–CM code sets is that ICD–10–CM accounts for laterality in the code set coding itself. ICD–9–CM only allows for laterality indicators through means of an extra modifier. These modifiers can only be used on outpatient claims to further describe the HCPCS codes, which are used for reporting physician and ambulatory procedures. HCPCS codes will continue to be used for reporting physician and ambulatory procedures. Current claim forms and systems do not allow for modifiers on the diagnosis codes in any setting or for procedures in the inpatient setting. This problem is corrected with both the ICD–10–CM and ICD–10–PCS codes. This improved ability to convey laterality can reduce duplicate payments and/or claims, and better inform research on conditions that may affect only one area of the body; for example, a stroke.

We believe that the laterality inherent in ICD–10–CM provides another reason to adopt ICD–10–CM and ICD–10–PCS code sets as HIPAA standards.

Comment: Several commenters stated that there is a discrepancy between the number of ICD–10–CM diagnosis codes stated in the August 22, 2008 proposed rule, and other previous citations. A commenter asked if the ICD–9–CM 13,000 diagnosis codes and 3,000 procedure codes referred to in the August 22, 2008 proposed rule are those that are currently in use or include potential space for use in the future.

Response: The June 2003 version of ICD–10–CM contained 120,000 codes. That figure was used in both CMS and other industry presentations because that was the number of codes in ICD–10–CM at that time. A draft of the ICD–10–CM code set was posted to CDC's Web site and CDC solicited comments on how to update and/or revise the coding system. Based on those submitted comments, CDC made revisions to ICD–10–CM that led to a reduction in the total number of ICD–10–CM codes for use in the clinical modification developed for use in the United States. A similar, annual process has been undertaken for ICD–10–PCS, resulting in changes to the number of ICD–10–PCS codes as well.

The ICD–9–CM 13,000 diagnosis codes and 3,000 procedure codes referenced in the August 22, 2008 proposed rule (73 FR 49802), represent those codes that are currently in use. These codes are updated each year by the ICD–9 Coordination and Maintenance Committee and, therefore, the number of codes changes annually. For FY 2009, there are 14,025 ICD–9–CM diagnosis codes and 3,824 ICD–9–CM procedure codes in use.

Comment: Commenters stated that the annual ICD–9–CM code set updates should cease one year prior to the implementation of ICD–10. Also, they stated that such a ''freeze'' on code set updates would allow for instructional and/or coding software programs to be designed and purchased early, without concern that an upgrade would take place just immediately before the compliance date, necessitating additional updates and/or purchases.

Response: The ICD–9–CM Coordination and Maintenance Committee has jurisdiction over any action impacting the code sets. Therefore, the issue of consideration of a moratorium on updates to the ICD–9–CM, ICD–10–CM and ICD–10–PCS code sets in anticipation of adoption of ICD–10–CM and ICD–10–PCS will be addressed through the Committee at a future public meeting.

Comment: One commenter noted that, while ICD–10–CM will incorporate needed specificity and clinical information as compared to the ICD–9–CM code set, the ICD–10–CM diagnosis code set in general does not include ''function diagnosis,'' the performance deficit for which an occupational therapy intervention is provided. The commenter strongly urged CMS to include in the ICD–10–CM code set a method of coding the functional impairments of patients requiring rehabilitation services, add specific functional diagnoses to ICD–10–CM codes, or adopt the use of the International Classification of Functioning, Disability and Health (ICF).

Another commenter stated that ICD–10–CM codes do not address the need to stratify the level of severity of traumatic brain injuries.

Response: We agree with the commenter that ICD–10–CM, like ICD–9–CM, does not include concepts that relate to difficulties with activities of daily living, functional impairments, and disability. Those concepts are found in the ICF, published by the World Health Organization. The wide scale incorporation of ICF concepts, with structural and definitional differences, into ICD–10–CM would be inappropriate. The WHO acknowledged this when developing ICF as a separate and distinct classification within the WHO Family of International Classifications. While we agree that ICF has great ability to more accurately and completely describe functioning and disability concepts, its adoption as a HIPAA code set is beyond the scope of this final rule.

The issue of coding of traumatic brain injury was discussed at the September 24–25, 2008 meeting of the ICD–9–CM Coordination and Maintenance Committee. It was stated at that time that the Committee would address any changes to be made to ICD–9–CM for traumatic brain injuries, and

those changes would also be incorporated into ICD–10–CM as necessary.

V. Provisions of the Final Regulations

For the most part, this final rule incorporates the provisions of the August 22, 2008 proposed rule. Those provisions of this final rule that differ from the August 22, 2008 proposed rule are discussed as follows.

In § 162.1002(b), we have revised the year ''2011'' to read ''2013'' in this regulation.

In § 162.1002(c), we have revised the year ''2011'' to read ''2013'' in this regulation.

In § 162.1002(c)(3), we have removed the term ''Classification'' and replaced it with ''Coding'' in this regulation.

VI. Collection of Information Requirements

Under the Paperwork Reduction Act of 1995, we are required to provide 30-day notice in the **Federal Register** and solicit public comment before a collection of information requirement is submitted to the Office of Management and Budget (OMB) for review and approval. In order to fairly evaluate whether an information collection should be approved by OMB, section 3506(c)(2)(A) of the Paperwork Reduction Act of 1995 requires that we solicit comment on the following issues:

- The need for the information collection and its usefulness in carrying out the proper functions of our agency.
- The accuracy of our estimate of the information collection burden.
- The quality, utility, and clarity of the information to be collected.
- Recommendations to minimize the information collection burden on the affected public, including automated collection techniques.

Section 162.1002 of 45 CFR explains the implementation and continued use of the International Classification of Diseases, Tenth Revision, Clinical Modification (ICD–10–CM) for diagnosis coding, and the International Classification of Diseases, Tenth Revision, Procedure Coding System (ICD–10–PCS) for inpatient hospital procedure coding for the period on and after October 1, 2013. The burden associated with the implementation and continued use of ICD–10–CM and ICD–10–PCS is the time and effort required to update information systems for use with updated HIPAA transaction and code set standards. Specifically, the entities must comply with the ASC X12 Technical Reports Type 3, Version 005010 (Version 5010) standards, which accommodate the use of the ICD–10–CM and ICD–10–PCS code set. The burden associated with meeting the ICD–10–CM and ICD–10–PCS code set standards is not discussed in this final rule; however, the burden associated with these standards is accounted for in the Version 5010 final rule, CMS–0009–F, published elsewhere in this **Federal Register**. The inclusion of other standards referenced in the Version 5010 final rule, namely the National Council of Prescription Drug Programs (NCPDP) Telecommunications Standard Version D.0, and the NCPDP Batch Standard Medicaid Subrogation Implementation Guide, Version 3, Release 0, has no impact on that analysis' ability to address the PRA burden of ICD–10–CM and ICD–10–PCS.

The burden associated with meeting the Version 4010 standards is contained in the following affected sections: § 162.1102, § 162.1202, § 162.1301, § 162.1302, § 162.1401, § 162.1402, § 162.1501, § 162.1502, § 162.1602, § 162.1702, and § 162.1802. The affected sections are currently approved under OCN 0938–0866 with an expiration date of July 31, 2011; however, the Version 5010 final rule provides for the revision of the requirements contained in the aforementioned affected sections to update the adopted HIPAA transaction standard to Version 5010. As OCN 0938–0866 was issued for the current version of this HIPAA standard, we have submitted to OMB a revised version of information collection request (OCN 0938–0866) for its review and approval of the information collection requirements associated with the implementation of the Version 5010 standards, and ultimately, the implementation of ICD–10–CM and ICD–10–PCS. Included as part of the revised Information Collection Requirement (ICR) are detailed instructions on the implementation of ICD–10–CM and ICD–10–PCS. These information collection requirements are not effective until approved by OMB.

VII. Regulatory Impact Analysis (RIA) Statement of Need

The objective of this regulatory impact analysis (RIA) is to summarize the costs and benefits of moving from ICD–9–CM to ICD–10–CM and ICD–10–PCS code sets in the context of the current health care environment.

The following are the three key issues that we believe necessitate the need to update from ICD–9–CM to ICD–10–CM and ICD–10–PCS:

- ICD–9–CM is out of date and running out of space for new codes.
- ICD–10 is the international standard to report and monitor diseases and mortality, making it important for the U.S. to adopt ICD–10 classifications for reporting and surveillance.
- ICD codes are core elements of many HIT systems, making the conversion to ICD–10 necessary to fully realize benefits of HIT adoption.

For a more detailed discussion of the limitations of ICD–9–CM, please refer to section III.B in the preamble of the August 22, 2008 proposed rule (73 FR 49799). As noted in the August 22, 2008 proposed rule, no other viable alternatives to adopting ICD–10 were identified. The costs and benefits for moving from ICD–9–CM to ICD–10–CM and ICD–10–PCS were assessed within the requirements of the Executive Orders and Acts cited in the regulatory impact analysis.

A. Overall Impact

We examined the impacts of this final rule as required by Executive Order 12866 on Regulatory Planning and Review (September 30, 1993, as further amended), the Regulatory Flexibility Act (RFA) (September 19, 1980, Pub. L. 96–354) (as amended by the Small Business Regulatory Enforcement Fairness Act of 1996, Pub. L. 104–121), section 1102(b) of the Social Security Act, sections 202 and 205 of the Unfunded Mandates Reform Act of 1995 (Pub. L. 104–4), Executive Order 13132 on Federalism (August 4, 1999), and the Congressional Review Act (5 U.S.C. 804(2)).

Executive Order 12866 (as amended by Executive Order 13258 and Executive Order 13422, which modifies the list of criteria used for regulatory review) directs agencies to assess all costs and benefits of available regulatory alternatives and, if regulation is necessary, to select regulatory approaches that maximize net benefits (including potential economic, environmental, public health and safety effects, distributive impacts, and equity). A regulatory impact analysis (RIA) must be prepared for major rules with economically significant effects ($100 million or more in any 1 year). We consider this to be a major rule, as it will have an impact of over $100 million on the economy. Accordingly, we have prepared an RIA.

Section 202 of the Unfunded Mandates Reform Act of 1995 (UMRA) also requires that agencies assess the anticipated costs and benefits before issuing any rule that includes a Federal mandate that could result in expenditures of $100 million in 1995 dollars (updated annually for inflation) in any 1 year by State, local, or tribal governments, in the aggregate, or by the private sector. That threshold level is currently approximately $130 million.

Based on our analysis, we anticipate that the private sector would incur costs exceeding $130 million per year beginning 3 years after the publication of the final rule, and ending 3 years after implementation. Our analysis indicates that the States' share of ICD–10 implementation costs would not exceed $130 million over a 1-year period. In addition, local or tribal governments will not experience costs exceeding $130 million over a 1-year period. We base our assessment on the fact that we received no comments from local governments indicating cost impacts exceeding $130 million over a 1-year period in response to the August 22, 2008 proposed rule, and the Indian Health Service (IHS) estimate of costs to tribal governments totaling $12.3 million as detailed in Table 1 of this final rule.

In addition, under section 205 of the UMRA (2 U.S.C. 1535), having considered three alternatives that are referenced in the preamble of this final rule, HHS has concluded that the provisions in this final rule are the most cost-effective alternative for implementing HHS's statutory objective of administrative simplification.

Executive Order 13132 establishes certain requirements that an agency must meet when it promulgates a proposed rule (and subsequent final rule), that imposes substantial direct requirement costs on State and local governments, preempts State law, or otherwise has Federalism implications. Executive Order 13132 requires the opportunity for meaningful and timely input by State and local officials in the development of rules that have Federalism implications. HHS consulted with appropriate local, State and Federal agencies, including tribal authorities and Native American groups, as well as private organizations. These private organizations included, among others, WEDI, NUCB, NUCC, and the ADA in accordance with section 1178(c)(3) of the Act.

In order to validate the fiscal and operational impact of this rule on State Medicaid agencies, current data on costs for States to implement a new code set would be necessary. We reference in the preamble of this final rule industry studies that were conducted by both Nolan and RAND that provide some insight into this information for States.

HHS has examined the effects of provisions in this final rule as well as the opportunities for input by the States. The Federalism implications of this final rule are consistent with the provisions of the Administrative Simplification subtitle of HIPAA by which HHS is required by the Congress to promulgate standards for the interchange of certain health care information through electronic means. Under section 1178(a)(1) of the Act, these standards generally preempt contrary State law.

The States were invited to submit comment on this section and all sections of the August 22, 2008 proposed rule.

The objective of this regulatory impact analysis is to summarize the costs and benefits of moving from ICD–9–CM to ICD–10–CM and ICD–10–PCS code sets in the context of the current health care environment.

We received numerous comments on our analysis of the costs and benefits of transitioning from ICD–9 to ICD–10. In the August 22, 2008 proposed rule (73 FR 49830), we solicited additional data that would help us determine more accurately the impact of ICD–10 implementation on the various categories of entities affected by the proposed rule. We solicited, but did not receive, comments regarding certain assumptions upon which we based our impact analysis in the August 22, 2008 proposed rule, including the inflation factor we applied to our assumed costs, and the growth factor we applied to our assumed benefits. We also did not receive comments regarding the number of, or specific impacts to, third party administrators or design firms that may need to update their systems or business processes to accommodate the ICD–10 code set. In those cases where we did not alter our assumptions from those made in the August 22, 2008 proposed rule, the relevant tables are referenced but not reprinted in this final rule. Detailed summary tables are provided herein with all of the costs and benefits recalculated to reflect changes that were made in response to comments.

Although many commenters stated that we overstated the benefits of transitioning from ICD–9 to ICD–10, they provided no data or information to substantiate their assertions or to refute our benefits analysis; therefore, this RIA continues to rely on the benefit assumptions outlined in the proposed rule's RIA.

Many commenters stated that we underestimated the costs of transitioning from ICD–9 to ICD–10.

In some instances, commenters included the cost of transition to Version 5010 in their discussion of the costs for transitioning to ICD–10. In those instances, we were unable to separate Version 5010 implementation costs from ICD–10 implementation costs. In other instances, they provided Version 5010 implementation costs, but not ICD–10 implementation costs. Regardless, in the majority of cases, commenters did not provide data or information to substantiate their cost estimates or to refute our cost estimates and regulatory impact analysis. Where new information was provided that allowed us to improve our cost estimates, we have outlined our rationale for the changes in the following narrative and summary tables.

1. Use of the Rand Report

Comment: A few commenters stated that the RAND report should not have been used as the basis for the impact analysis in the August 22, 2008 proposed rule because they asserted that the RAND report underestimates ICD–10's systems impacts and the labor-intensive nature of implementation activities. One commenter suggested that the Nolan report, and not the RAND report, was the more accurate study, and suggested that it should have been used as the primary source of data for the August 22, 2008 proposed rule's impact analysis.

Response: The 2004 RAND and Nolan reports are considered by the industry to be the benchmark studies for the transition from ICD–9–CM to ICD–10, and both have been cited by other reports as the basis for their ICD–10 cost assumptions. In the proposed rule (74 FR 49811), we detailed the differences between RAND and Nolan's data sources, assumptions and cost estimates on a wide variety of elements, including training, productivity, system changes, contract renegotiations and benefits. Each report considers some factors that the other does not, uses different data gathered from a variety of sources at different times, and cites some data that are not substantiated. The HHS intra-agency workgroup analyzed both reports prior to developing its own assumptions and conclusions, which served as the basis for the proposed rule's analysis.

2. Estimated Costs—General

Comment: Many commenters expressed their general perceptions regarding the costs of implementing ICD–10–CM and ICD–10–PCS. Some commenters stated that they thought it was simply too expensive for industry to implement ICD–10–CM and ICD–10–PCS in the current economic climate. Several commenters suggested that more analysis of the costs is needed, and recommended a variety of mechanisms, including a provider office/hospital panel. Others expressed the need to monitor and publicly report on the costs, benefits, and industry readiness through an independent party such as NCVHS.

Response: The estimates we developed for the August 22, 2008 proposed rule were based upon extensive analysis of publicly available data by an HHS intra-agency workgroup representing many areas of expertise. While the provisions and analysis offered in the August 22, 2008 proposed rule represented the best available information, we solicited input on our assumptions, and anticipated that commenters would provide any additional available data that was available that would enable us to refine our estimates of the impacts associated with the implementation of ICD–10–CM and ICD–10–PCS. While we did receive input regarding specific assumptions, most commenters did not substantiate their assertions that we underestimated costs and overstated benefits with data that we could use to produce more accurate estimates. In the cases where commenters provided updated, substantiated data, we have discussed the new information and revised our estimates accordingly.

We agree with commenters that NCVHS is an appropriate public body through which to solicit and share industry information on costs and implementation of, and compliance with, electronic transactions and code sets. We trust that it will continue to be a valuable resource to HHS and the industry as these code sets and other HIPAA standards are implemented.

3. Training—Number of Coders

Comment: A number of commenters disagreed with our estimate of the number of inpatient, full-time coders. In the August 22, 2008 proposed rule, we estimated that there are 50,000 full-time, inpatient coders based on AHIMA membership, and 179,230 part time coders, based on NAIC data as shown on Table 7 of the August 22, 2008 proposed rule (73 FR 49815). We assumed that full-time coders likely work in the hospital setting, and therefore would require training on both ICD–10–CM and ICD–10–PCS. We further assumed that part time coders likely work in the ambulatory setting, and therefore would require training only on ICD–10–CM. Commenters representing two national coder associations disagreed with the estimate that there are only 50,000 full-time inpatient coders in the United States. Five members of a national coder association commented that it is likely that the total number of coders nationwide is approximately 150,000, of which 100,000 are certified coders. However, they did not substantiate their assertion, nor distinguish between the number of full-time inpatient and part-time outpatient coders in this 150,000 figure. The other national coder association stated that they did not have a more accurate estimate of the number of full-time inpatient hospital coders, but simply wanted to note that, in their opinion, the basis of the number of full-time, inpatient coders used for our estimates in the proposed rule was flawed. This commenter stated that our assumption that part-time coders work in ambulatory settings, and that full-time coders work in hospitals was inaccurate because there are many full-time coders who practice in outpatient settings. They also recognized that estimating the number of coders in the U.S. is very difficult, and that current statistics for occupational classifications may not permit a fully accurate estimate of the number of coders, or the settings in which they work. Several commenters stated that there are other clinical specialty organizations that certify their members as coders and that those coders should also be included in our estimates.

A few commenters suggested that all coders would need additional physiology and anatomy training in order to use the ICD–10 code sets.

Response: In the proposed rule (73 FR 49815), we discussed our estimate of the number of full-time, inpatient coders. The Nolan study estimated approximately 142,170 coders, but did not differentiate between hospital coders (inpatient) and coders working in ambulatory settings, and also did not provide the source for these data. Assuming that full-time, inpatient coders were employed primarily by hospitals and that these individuals would be represented by AHIMA's 50,000 membership, we used that number in calculating the number of full-time, inpatient coders who would require training on both ICD–10–CM and ICD–10–PCS.

In the August 22, 2008 proposed rule (73 FR 49815), we also estimated, based on NAIC codes from the 2005 Statistics of U.S. Businesses, that there are approximately 179,267 part-time coders. This was based on our assumption that, for every 20 employees in an ambulatory setting, there would be one part-time coder. We calculated the estimated number of part-time coders in outpatient ambulatory practices with 20 to 499 employees. This total of part-time coders, 179,267, plus the aforementioned 50,000 full-time, inpatient coders, accounted for a total estimated coder universe of 229,267 coders who would require ICD–10–CM and/or ICD–10–PCS training.

We also do not believe that coders will need additional training in anatomy and physiology in order to use ICD–10 codes. Most, if not all, coders already possess basic knowledge of anatomy and physiology either through formal training or through on-the-job experience.

We understand that many hospitals require their coders to be certified through an examination program and annual continuing medical coding education offered by their professional associations and other educational entities. If we were to assume, as some national coder association members commented, that there are an estimated 100,000 certified coders, that they all are employed by hospitals, and that there are 5,700 hospitals in the United States, we would conclude that there are approximately 26 certified coders per hospital. We cannot confirm that all hospitals require their coders to be certified, and believe that the average of 26 certified coders per hospital is likely too high and would skew our analysis of these estimated costs.

We acknowledge that while there may be more than 50,000 inpatient coders, the 150,000 total coder estimate offered by some coder association commenters does not distinguish between how many of those may be inpatient coders versus outpatient coders. We also do not know how many other clinical specialty certified coders may exist. We do agree with both the commenters' and the RAND report's contention that, because inpatient coders must also learn ICD–10–PCS in addition to ICD–10–CM, we need to account for their increased training costs and productivity losses, and therefore, we must attempt to assign a value to the number of inpatient coders if we are to establish valid cost estimates.

Therefore, we will retain our estimate of 229,267 coders in total from the proposed rule. However, we will increase our estimate of hospital coders from 50,000 to 60,000 coders. This shift decreases the number of outpatient coders as shown in the proposed rule by 10,000, to 169,267, but still accounts for a total number of 229,267 coders. The basis for these revised assumptions is derived from our research of the U.S. Bureau of Labor Statistics (BLS) data. The BLS data show that, in the category ''Medical Records and Health Information Technicians'', which includes many coders, 60,000 of the individuals accounted for in this category are employed by hospitals. We acknowledge concerns that current statistics for occupational classifications may be inaccurate, but absent other substantiated data, we must rely on the information that is currently available and use our best judgment in arriving at a conclusion based on that data.

We note that our estimate of 229,267 coders in total is higher than the estimates from the Nolan report and commenters. We considered reducing our estimate accordingly, but decided to retain the higher number to assure we have adequately addressed this cost.

4. Number of Coder Training Hours/Costs

Comment: In the August 22, 2008 proposed rule (FR 73 49815), we had estimated that, based on RAND data, approximately 50,000 inpatient coders who would need to learn both ICD–10–CM and ICD–10–PCS would require about 40 hours of training. We also estimated that ambulatory coders who would need to learn only ICD–10–CM would need only about 8 hours of training. We calculated the cost of ICD–10 code set training for inpatient coders at $2,750 per coder, assuming $550 in training costs and $2,200 in lost productivity, for a total of $137.51 million. For the proposed rule's 179,000 coders in the ambulatory setting, we estimated a cost of $110 in training costs and $440 each for lost work time, for a total of $98.5 million.

Many commenters offered widely varying estimates as to the amount of time required, and associated costs, for coding training. A few commenters stated that the training time for coders outlined in the proposed rule appeared to be reasonable. Another commenter stated that we overstated training costs, and that ''train the trainer'' programs could be effectively used to train coding leaders who would then disseminate information to other colleagues, replacing the costs already being incurred by hospitals to keep up with changes in ICD–9–CM.

One commenter stated that an experienced coder would need as little as 5 hours of ICD–10 training. The majority of commenters estimated that it would take more than 40 hours of training, and more likely between 40 to 60 hours for coders to train in ICD–10. Still another commenter estimated that it would take between 60 to 80 hours of ICD–10 training for a coder in an ambulatory setting. Another commenter stated that coders must attend anywhere from 10 to 30 hours of training annually to earn continuing education credits to maintain their professional credentials, and that this time and expense would offset any ICD–10 training time and expense projections.

Commenters stated that coder training costs ranged from $150 per coder to over $96,000 to train a health plan's coding staff. One commenter stated that our estimated training cost of $31 per hour per coder was too low, and can vary greatly depending on geographic region. One commenter stated that we did not account for coder training-related travel. Another commenter stated that our estimate of $550 per coder for a week of training is low by industry standards, but that the return on investment justifies any training expense.

Response: Commenters' estimates of the amount of time needed for coder training, based on whether they worked full-time in inpatient settings or part-time in ambulatory settings, varied greatly. Estimates for coder training involve five distinct areas of consideration: The training methodology; the clinical specialty; the number of inpatient and outpatient coders; the number of hours for coder training; and the cost per hour of training.

ICD–10 code set training will likely be offered by both commercial entities and/or industry associations or other interested stakeholders, and training can take many forms—self-directed internet or intranet, webinars, video conferences, correspondence courses, seminars, technical school and community college courses, seminars, etc. The longer and more detailed the training and the setting (for example, in person versus on-line training), the greater the impact on the cost of training. However, more ''convenient'' training, such as that offered on-line or through webinar, may also charge attendees a premium price for training based on the convenience of on-line or webinar programs. As one commenter noted, the use of a ''train the trainer'' approach to training would greatly reduce training costs for a larger organization that employs a number of coders and/or personnel who perform coding functions and require ICD–10 code set training. Also, training may or may not require travel and as such, there is no way to estimate travel expenses as a result of attending training for ICD–10 coding.

We recognize that perhaps as many as 100,000 coders may be certified, and already spend from 10 to 30 hours a year attending training for which they receive continuing education credits to maintain their certifications. These costs would likely already be accounted for as part of that ongoing educational process, but again, we have no way of knowing if these certified coders work in inpatient and/or outpatient settings. Absent such data, an attempt on our part to assign numbers of certified coders to one setting versus another would likely be inaccurate.

We have carefully considered the comments received, and we generally believe that some adjustments to our estimates for the number of hours and costs of ICD–10 training for coders may be necessary.

Based on industry feedback regarding the need for more time than the 40 hours of training we estimated for inpatient coders to learn both ICD–10–CM and IC–10–PCS, we will increase our estimate of the number of hours of training that inpatient coders will need to learn ICD–10–CM and ICD–10–PCS from 40 hours to 50 hours, well within the commenters' suggested range of as little as 5 hours of training, to a maximum of 80 hours. As discussed above, we have estimated that there are 60,000 inpatient coders who would require these 50 hours of training. To account for geographic variations in costs, we will increase our training costs only, by 15 percent, to a cost of $3,218.75 per coder, including $2,500 for lost productivity (based on the increased number of training hours) and $718.75 in training costs, for a total of $212.06 million, annualized at 3 percent and 7 percent, as reflected in Table 4.

Based on similar feedback from the industry expressing concern about the complexity of ICD–10–CM due to its size and structural changes, and coder unfamiliarity, we also will increase from 8 to 10 hours the time that outpatient coders will need for ICD–10–CM training, and calculate that 169,267 outpatient coders will require 10 hours of ICD–10–CM training at a cost per coder of $644 ($500 in lost productivity due to the increase in hours, and $143.75 in training, the latter of which includes a 15 percent increase in estimated training costs from the August 22, 2008 proposed rule), or a total of $119.69 million, annualized at 3 percent and 7 percent, as shown in Table 4.

We considered reducing the estimates in recognition of the fact that almost half of the total number of coders are likely to receive some ICD–10 training as part of their continuing education requirements for maintaining certification. However, we elected to retain the higher number to ensure that we have adequately addressed this cost.

5. Physician Training

Comment: In the August 22, 2008 proposed rule, we estimated, based on RAND's assumption, that ten percent of all physicians, or about 150,000, would seek ICD–10 code set training. We made the assumption that this training would take up to 4 hours, instead of RAND's estimate of 8 hours, at a cost per hour of $137. Many commenters stated that we underestimated the number of physicians that would need training on the ICD–10 code sets, and the amount of time that training would take. Some professional associations stated that all

physicians will need ICD–10 code set training. A few commenters, citing an industry-sponsored report on ICD–10 costs for physician practices, estimated 12 hours of ICD–10 code set training would be required for physicians.

In contrast, another national professional coder association referenced their own study, showing that almost half of the respondents reported that none of the physicians in their offices performed coding, and of those physicians who did, they performed coding on only a small portion of the ICD–9–CM code set. Other commenters confirmed that many physicians do not code themselves, but rather rely on billers or other staff, or use superbills for coding. However, several commenters stated that, at a minimum, all physicians will need to be aware of the basic guidelines and construct of the ICD–10 code set, or ''awareness training'', provided through existing physician continuing education and hospital-sponsored in-service training.

Response: In the August 22, 2008 proposed rule (73 FR 49809), we discussed the differences between the RAND and Nolan report assumptions relative to ICD–10 code set training for physicians. We also discussed our rationale for our decision to base our estimates on 4 hours versus RAND's 8 hours for physician ICD–10 training, because we assumed that the majority of physicians used superbills and would not require 8 hours of training.

There appears to be a wide variance of opinions across all industry segments as to how many physicians would need and/or want ICD–10 code set training, and the length of that training. As discussed in the coder training section of this impact analysis, we believe that there are many factors that may influence this estimate, including geographic region; clinical specialty; size of practice; and available resources (superbills, electronic medical records, etc.)

We agree that physicians will want training on ICD–10 code sets, but it is clear from commenters that the RAND estimate of only 10 percent of physicians wanting ICD–10 code set training may be too low. In an effort to better estimate the costs of ICD–10 training for physicians, while acknowledging commenters who stated that not all physicians will need training due to use of superbills, staff and other coding mechanisms, we will accept the Nolan study estimate of 754,000 physicians seeking a midpoint of 8 hours of ICD–10 training, at a cost of $157.55 per hour (reflecting a 15 percent increase over the per hour cost estimate of $137.00 per hour used in the August 22, 2008 proposed rule), or $1,043.14 million, annualized at 3 percent and 7 percent as shown in Table 4. We also will assume that the remainder of physicians will either not seek ICD–10 code set training, or will need less intensive ''awareness training'' which we anticipate will be available through continuing medical education opportunities of which they likely would have availed themselves absent the transition from ICD–9 to ICD–10.

6. Training for Auxiliary Staff

Comment: In the August 22, 2008 proposed rule (73 FR 49816), we estimated that, based on RAND data, there were some 250,000 code users. We assume that, of these 250,000, only 150,000 work directly with codes and would require 8 hours of training for an total training cost of approximately $250 ($31.25 per hour × 8 hours). Some commenters mentioned that we did not account for other staff that may need training other than coders and physicians. Commenters stated that many health care settings, especially small physician practices, do not employ professional coders, but rather office staff who, along with other duties, provide the coding needed for claim submission and reimbursement purposes.

Commenters cited billing/administrative staff; clinicians and non-physicians; clinical support staff, analytical and IT professionals; coding specialists; labs; and ancillary staff as those additional staff who will require training on the new codes. One commenter estimated that for a health plan/payer, staff training could amount to $96,156, not counting the cost of reference materials or training costs from outside sources.

One commenter mentioned that code users can also include those who use the codes for medical decisions and that they will need extensive training on the new codes. Another commenter stated that the category of ''code users'' represents individuals with a wide variety of roles and responsibilities, so the level of training needed would depend on how and to what extent the individual health professional use coded data and potentially how the training is delivered. One commenter disagreed with the number of code users that we outline in the proposed rule, estimating that there are only 20,000 code users, but did not substantiate the source of their information.

Response: In the August 22, 2008 proposed rule (73 FR 49815), we used RAND data to define code users as people outside of health care facilities—researchers, epidemiologists, consultants, auditors, claims adjudicator, etc. Users could also include people within health care facilities in areas such as senior management, clinicians, quality improvement, utilization management, accounting, business office, clinical departments, data analysis, performance improvement, corporate compliance, data quality, etc. Additionally AHIMA defines a user of coded data as anyone who needs to have some level of understanding of the coding system, because they review coded data, rely on reports that contain coded data, etc., but are not people who actually assign codes. These could include the additional staff that will require training as cited above.

In the August 22, 2008 proposed rule (73 FR 49816), we estimated that there are approximately 250,000 code users, most likely employed by payers but that, based on RAND data, only about 60 percent, or 150,000, would require ICD–10 code set training for the purpose of actually assigning and/or interpreting codes. We believe that, given all the categories of coders, both professional and non-professional, physicians, other clinicians, auxiliary staff and the code users definitions as shown above, we have adequately accounted for a broad universe of potential code users and we maintain our original assumption of the number and costs of training for code users.

As stated in the August 22, 2008 proposed rule (73 FR 49814), we based our estimates on 2004 dollars because we used RAND study figures based on 2004 dollars. For purposes of this analysis, we are updating the value to 2007 dollars to be consistent with the updates to our benefits analysis by applying the increases in the Consumer Price Index (CPI–U) from 2004 to 2007. For the costs estimates, we divide the CPI–U annual index for 2007 (the most recent data available) by 2004's index to determine the adjustment factor in which to apply to each cost estimate. This adjustment factor equals approximately 1.098. Since the cost estimates for implementing ICD–10 are not tied to medical services, we feel that the CPI–U is reasonable to use for adjusting these 2004 costs for inflation. We are adjusting our estimate for code user training costs that were based on RAND data from the estimate shown in the August 22, 2008 proposed rule update to 2007 dollars for a revised total of $41.18 million over 4 years, annualized at 3 percent and 7 percent, as shown in Table 4.

7. Productivity Losses

Comment: In the August 22, 2008 proposed rule (73 FR 49814), we acknowledged that, while RAND did not consider the cost of cash flow interruptions as a result of the adoption of ICD–10–CM and ICD–10–PCS, we agreed with the Nolan study that the implementation of the new code sets may cause serious cash flow problems for providers, and assumed that payers would develop temporary payment policies to mitigate this risk.

Many commenters agreed that, with the introduction of ICD–10, for a period of time, we may see an increase in returned or rejected claims which may cause physician practices and/or hospitals to spend more time fixing billing problems. Many commenters mentioned that ICD–10 will cause an increase of improperly paid claims and denied and/or rejected claims, which will require additional audit work and investigation to find and fix problems.

One commenter stated we underestimated the projected claim rejection rate in the August 22, 2008 proposed rule, and that they experienced a higher (20 to 30 percent) rejection rate when implementing the NPI. Commenters disagreed with our statement in the August 22, 2008 proposed rule (73 FR 49814) that it was the plans' practice to advance periodic interim payments (PIPs) to providers who might be affected by a claims processing slowdown. A few commenters, citing an industry-sponsored report on ICD–10 costs, stated that significant changes in reimbursement patterns according to severity of diagnosis (which are determined based on ICD–10–CM codes) will disrupt provider cash flows, and estimated the cost of cash flow disruption per physician practice to be between $19,500 and $650,000.

Commenters stated that CMS should monitor and publish claim rejection rates, issue clear and flexible Medicare advance payment guidelines and mitigation strategies if provider cash flow is adversely affected, and consider interim Medicare payments to hospitals if payments are disrupted.

Response: In the August 22, 2008 proposed rule (FR 73 49817), we accounted for the fact that the implementation of the new code sets is expected to produce a temporary increase in coding errors on the part of physicians, resulting in rejected and/or returned claims. We used Medicare returned claims data for FYs 2004 through 2006, and identified a spike pattern in Medicare returned claims 3 to 6 months following introduction of annual ICD–9 code updates. We noted that we anticipated that the percent of returned claims following the ICD–10 implementation could be more than double the previous years' increase, and that returned claims may peak at around 6–10 percent of pre-implementation levels. We estimated a cost range from between $274 million to $1,100 million. We believe that our assumptions, based on three years' worth of Medicare returned claims data, more closely reflects returned claims experience, and therefore is more accurate than reliance on NPI experience, which was likely caused by plans' inability to link incoming NPIs with legacy identifiers.

We also reject the notion that significant changes in reimbursement patterns based on severity of diagnosis will disrupt provider cash flows. We do not anticipate that there will be any immediate changes to reimbursements with the initial implementation of ICD–10–CM. Data drives changes in reimbursements, and this data likely will not be available for quite some time after the implementation of ICD–10–CM, and thus reimbursement changes will be accomplished on an incremental basis.

States have prompt payment laws that require that penalties be assessed against health plans who do not issue payments for properly submitted claims in a timely manner, and Medicare is also subject to similar requirements. Therefore, it is in the best interests of all plans to pay promptly to avoid these penalties. Moreover, the October 2013 compliance date for ICD–10 provides ample time for plans to prepare and test their payment systems to allow for an orderly transition.

As stated in the proposed rule (73 FR 49817), the implementation of the new code sets is expected to produce a temporary increase of physician coding errors. We received many concurrences with this assumption but no additional or substantiated data to counter our quantitative analysis at this time. Therefore, we maintain our estimate based on our original costs, as stated in the August 22, 2008 proposed rule.

Comment: One commenter disagreed with our analysis of coding productivity in the August 22, 2008 proposed rule (73 FR 49817) because they stated that the use of preprinted forms or touch-screens does not constitute coding. One commenter also took issue with our estimate that productivity losses during the first six months of ICD–10–CM implementation will be reversed, stating instead that it will be a long-term productivity loss. One commenter mentioned that the August 2008 proposed rule suggests an outpatient productivity rate of 3,525 claims per hour and that this is 100 times greater than what is customary in some specialties and more than 10 times what is performed in the most highly automated computer assisted coding operation.

Other commenters disagreed with our assumption that the average time to code an outpatient claim could take one-hundredth of the time for a hospital inpatient claim. Commenters stated that physician offices would suffer productivity losses because ICD–10–CM training would take physicians away from patient care, looking up new codes will take more time, it will take longer to process notes and billings, and practice workflows in general will be disrupted.

Response: In the August 22, 2008 proposed rule (73 FR 49816), we acknowledged that coders' productivity will be directly affected because of the need to learn new codes and definitions, and undoubtedly some claims will require resubmission to payers as both providers and payers adjust to the new codes. For outpatient productivity losses, we assume the average time to code an outpatient claim could take one-hundredth of the time for a hospital inpatient claim, taking into account the wide variety of outpatient settings and coding forms. Although commenters disagreed with this assumption, they did not substantiate their comments with data that contradicted our assumptions or analysis.

As stated in the August 22, 2008 proposed rule (73 FR 49816), many physicians use, and will continue to use super-bills, which reduces the coding time. We disagree with the commenter who stated that the use of superbills or touch screens does not constitute coding. Coding is the assignment of a code to a specific clinical condition or procedure; the mechanisms used to do this, whether electronic or manual, may differ, but codes are still assigned. We considered the variety of settings in which coding is done and noted that most only focus on one or two medical conditions (which would likely be clearly identified for the coders by the physician) in our analysis in the August 22, 2008 proposed rule.

We are adjusting our cost estimate for outpatient productivity losses from the estimate shown in the August 22, 2008 proposed rule to account to update to 2007 dollars, for a revised total of $9.40 million in 2014, the year after ICD–10 implementation, and this annualized cost at 3 percent and 7 percent is reflected in Table 4.

Comment: A few commenters questioned our estimate of an additional 1.7 minutes to code an inpatient claim

in the first month of ICD–10–CM and ICD–10–PCS compliance, and the associated productivity losses. None of the commenters stated whether they deemed that estimate to be too high or too low.

Response: In the August 22, 2008 proposed rule (73 FR 49816), we estimated an additional 1.7 minutes to code an inpatient claim that includes an inpatient procedure in the first month of ICD–10–CM and ICD–10–PCS compliance. This estimate was based upon analysis reported in the RAND report. According to RAND, ICD–10–PCS was tested by two clinical data-abstracting centers. One center found that ICD–10–PCS which is used in inpatient settings, generated more codes and that each record, on average, took longer to code than did ICD–9–CM (3.6 minutes versus 1.9 minutes, or a difference of 1.7 minutes). We applied this 1.7 minute loss to 1.8 million inpatient claims requiring procedures coding per month (20,000,000 claims per year divided by 12 months) at $50 per hour, or $1.41 per claim, resulting in a productivity loss of $2.7 million in the first month. After accounting for a monthly increase in productivity of $450,000, and subtracting this from each month's lost productivity, we arrived at a total inpatient productivity loss of $8.90 million in 2014, the year after ICD–10 implementation.

None of the commenters indicated whether this estimate was too low or too high. Therefore, we maintain our assumptions and our productivity loss estimates as outlined in the proposed rule. We are adjusting our estimate for inpatient productivity losses from that shown in the August 22, 2008 proposed rule to update to 2007 dollars, for a revised estimate of $9.77 million in inpatient coder productivity losses, and annualized at 3 percent and 7 percent, as shown in Table 4.

Comment: Some commenters stated that the August 22, 2008 proposed rule did not adequately account for the cost of updates to the CMS–1500 claim form and superbills. One commenter noted that, while 50 percent of all physician practices use superbills, the conversion to the larger ICD–10–CM code set will make superbills cumbersome and impractical. A few commenters stated that the $55 superbill revision cost cited in the proposed rule was too low. Another commenter stated that it took more than 2 hours to convert a sample family practice superbill from ICD–9 to ICD–10, resulting in an unusable 9-page document. Another commenter stated that superbill conversion could take up to 6 hours, with an additional 4–6 hours for physician review, costs of $500 to $1,000 for editing and new batch printing, and additional costs for disposal of outdated superbills. A few commenters, citing an industry-sponsored report on ICD–10 costs, estimated the expense for revising superbills to be from between $2,985 for a small physician practice, to $99,500 for a large practice.

Response: Commenters erroneously interpreted our reference to superbill costs in the August 22, 2008 proposed rule (73 FR 49817). In that proposed rule, we estimated that the total cost of lost productivity (time) for a coder to convert a practice's superbill would be only about 2 hours' time or approximately $55, not the entire cost of reprinting a supply of superbills. The 2003 field study conducted by the American Health Information Management Association (AHIMA) and the American Hospital Association (AHA) demonstrated that a superbill can be converted to ICD–10–CM in a few hours, and that they are no larger than existing superbills. Superbills generally do not list all of the specific codes relevant to a particular condition but if this was the case, the existing ICD–9–CM superbills would also be pages long.

The reprinting of superbills is an annual expense incurred by providers. For example, one form manufacturer might charge a provider anywhere from $100 for 2,500 1-part, white bond superbills, to $600 for 10,000, 3-part carbonless superbills. We also know that one major medical center incurred an annual cost of approximately $93,000 for their reprinting of superbills. However, because ICD–9–CM code sets are updated annually, providers and hospitals would likely still incur revision and reprinting, as well as disposal costs for unusable superbills as an annual cost of doing business whether or not there was a changeover from the ICD–9–CM code sets to the ICD–10–CM and ICD–10–PCS code sets.

With respect to the CMS–1500 claim form, the National Uniform Claim Committee (NUCC) which maintains this claim form, already expanded the field for reporting diagnosis codes to accommodate the ICD–10 format in their August 2005 revision of the claim form. It is therefore ready for ICD–10 use with no additional cost.

Therefore, because we maintain that there will not be any substantive additional costs for reprinting of superbills, and none for the CMS–1500 claim forms resulting from the transition to ICD–10, we will not make any revisions to our impact analysis based on superbill and/or 1500 claim form costs. However, we are adjusting our cost estimate to update to 2007 dollars, for a revised cost of $12.08 million in 2014, the year after ICD–10 implementation, annualized at 3 percent and 7 percent as shown in Table 4.

Comment: The industry's perceived need for increased medical documentation was not addressed in the proposed rule because we did not consider it to be a relevant cost. We received several comments that the use of ICD–10–CM and ICD–10–PCS would cause physicians to order unnecessary medical tests to provide more precise diagnoses or require more documentation to the medical record, wasting medical resources, and greatly increasing provider costs. Commenters stated that one must use the most precise ICD–10 code every time to achieve the full benefits of ICD–10. Another commenter stated that local claims determination adjudication rules require claims coded with ''unspecified'' codes to be rejected.

Response: We agree that ICD–10–CM and ICD–10–PCS offer significantly greater detail and specificity reflecting the nature of a patient's medical condition. We also agree that there are substantial benefits to be derived from the greater detail of ICD–10–CM when a coder selects the most accurate code based on the available documentation. This is true whether one is using ICD–9–CM codes or ICD–10–CM codes. If one cannot assign a precise code, it is because the medical record documentation is not available or because a clear diagnosis has not been made and in that case, a more general, non-specific code would be selected. Such codes are available in both ICD–9 and ICD–10. However, we disagree that physicians will be pressured to perform unnecessary medical tests or include additional medical documentation because they are using ICD–10–CM and ICD–10–PCS code sets.

Physicians adhere to standards of care which, according to the AMA, ''is a duty determined by a given set of circumstances that present in a particular patient, with a specific condition, at a definite time and place.'' These standards of care include full documentation which, according to the American Academy of Family Physicians (AAFP), ''includes fully describing the patient's medical history, physical findings, (the physician's) diagnosis, the treatment plan and care rendered.'' Physicians select codes that reflect the information that they have available to them through patient history, physical findings and clinically appropriate testing, which they have documented in the patient's medical record based on the aforementioned standards of care. Patient care and

treatment are not pre-determined by diagnostic coding; in fact, diagnostic coding is determined from best practice patient care. A poorly documented medical record can be problematic for a number of reasons, but such deficient medical records are an issue of and by themselves, and not contingent upon whether the code assigned is an ICD–9–CM or an ICD–10–CM code.

Improved medical documentation is not predicated on the change from ICD–9–CM to ICD–10–CM. Rather, improved medical documentation is being driven by initiatives such as quality measurement reporting, value-based purchasing and patient safety.

We view any potential improvements in medical record documentation as a positive outcome of the move to ICD–10–CM and ICD–10–PCS. With better and more accurate data, patient care can only be improved.

For some services, such as a particular drug or surgical procedure, there may be a National Coverage Decision (NCD) or a Local Coverage Decision (LCD) that requires the reporting of a list of specific diagnosis codes. These coverage decisions sometimes include unspecified codes but oftentimes they do not. In a handful of cases, the coverage decision will list several specific diagnosis codes needed in order to make payments, and physicians are aware of the services or surgeries to which they apply. Under MS–DRGs, sometimes a lower payment results from reporting an unspecified code. An unspecified code will still result in a payment, but it might be a lower payment. The number of such cases will not necessarily increase as a result of the adoption of ICD–10.

8. System Changes—Provider/Vendor

Comment: Commenters stated they would incur costs to implement ICD–10–CM, including updating and/or replacing software and hardware. Commenters disagreed with our assumption in the proposed rule that vendors might provide their clients with updated ICD–10-compatible software at little to no charge. One commenter stated that some vendors charge upwards of $10,000 for similar software updates.

Response: In the August 22, 2008 proposed rule (73 FR 49818), we assumed that large provider groups, chain providers and institutions, such as large hospitals, are most likely to require changes to their billing systems, patient record systems, reporting systems and associated system interfaces. We also noted that the new codes may also require the redesign of standard and special reports. Additionally, small providers, who rely on superbills, as well as their home-grown systems for capturing patient information and claims submission, may only need to update their systems to accommodate the length of the new code fields. Costs of updating provider systems will depend on the degree of system integration; the need for outside technical assistance; and the number of systems and system interfaces that must be updated. Physician practices (and all providers) should begin looking at their use of ICD–9–CM and use the transition to ICD–10 as an opportunity to consider changes that will improve their processes and workflows.

Although commenters do not agree that vendor-supplied software will be provided to providers free-of-charge, we maintain that, for small providers that are PC-based or have client-server systems, the provider may not bear any immediate costs for the software upgrades. Practice management systems will need to be revised to accommodate ICD–10 codes, but this change will take place as a part of the migration to the Version 5010 standards, and these costs have been accounted for in that impact analysis.

Although we recognize that providers' systems will require updating, we did not receive substantial information or data during the August 22, 2008 proposed rule's public comment period that would lead us to revise our cost analysis in this area. We are adjusting our cost estimate as shown in the August 22, 2008 proposed rule to update to 2007 dollars, for a revised cost of $150.64 million over 4 years, annualized at 3 percent and 7 percent as shown in Table 4.

Comment: In the August 22, 2008 proposed rule (73 FR 49805), we cited a November 2002 joint letter to NCVHS from the AHA, Federation of American Hospitals (FAH) and AdvaMed supporting the implementation of ICD–10–CM and ICD–10–PCS as national standards. We also noted in the proposed rule (73 FR 49818) that large institutions such as hospitals will need to transition their systems to both ICD–10–CM and ICD–10–PCS, at a cost ranging from $55 million to $220 million. One commenter stated that few hospitals were aware of the impending transition to ICD–10, and have not developed the multi-disciplinary teams necessary for a successful transition. Other hospital commenters noted that they use a combination of purchased software and in-house applications, and both will require modifications for ICD–10 code sets for functions such as code assignment, medical records abstraction, claims submission, and other financial functions, at a heavy financial burden to them. However, they did not contest our systems cost estimates. One commenter noted that this large transition will require at minimum two hospital budget cycles in order to properly plan and allocate resources.

Response: Hospital commenters did not submit any new data that substantiated their assertions and would predispose us to revising our large provider group cost projections, so we will continue to rely on our estimate as outlined in the August 22, 2008 proposed rule. Given the change of the ICD–10 compliance date to October 2013, we anticipate that hospitals will have ample budget cycle time during which to plan for their systems implementation of ICD–10–CM and ICD–10–PCS. Moreover, the conversion of billing systems to accommodate ICD–10 codes will take place as part of the migration to the Version 5010 standards, and these billing system conversion costs have been accounted for in that impact analysis.

Comment: We stated in the August 22, 2008 proposed rule (73 FR 49818) that, while many providers who use vendor-supplied software may be able to defer the costs of software upgrades, the vendor industry may have to bear, at least initially, the costs of such upgrades. Using RAND's analysis, based on interviews conducted with industry experts, we estimated cost of system changes for software vendors of transitioning to ICD–10 to include the wide range of information and billing systems and the configurations of provider systems. Commenters stated we underestimated or did not account for all vendor software and systems revision costs. These include patient accounting, practice management and billing systems; encoders and grouper software; contract management and reimbursement modeling programs; quality measurement systems; software components of emergency departments, and ambulatory and physician office systems that must be revised to accommodate the use of the ICD–10 code sets. Commenters also stated that systems used to model or calculate acuity, staffing needs, patient risk and patient care; decision support systems and content; presentation of clinical content for support of plans of care; and selection criteria within electronic medical records would be impacted by the use of ICD–10 code sets. Commenters stated that specifications for data file extracts, reporting programs and external interfaces, analytic software that performs business analysis or that provides decision support analytics for financial and clinical

management; and business rules guided by patient condition or procedure would also need to be revised for ICD–10 use. Commenters estimated an average of 24 months for product development, and that vendor product release cycles, typically between 18 to 36 months, do not usually match regulatory compliance dates and the transition to ICD–10 may negatively impact these cycles.

Response: While some commenters provided additional examples of vendor systems that will need to be updated for the transition to ICD–10, they did not provide us with any costs associated with those systems. We are unable to determine at this point if those additional systems can be applied to all vendors since vendors deal with many types and sizes of providers and provider organizations.

We agree with commenters that there will be impacts to vendor systems, and that it may be difficult to initially account for all system changes because of the varying needs of individual providers.

We again point out that a portion of these costs will take place as part of the migration to the Version 5010 standards and these system costs have been accounted for in that impact analysis. However, based on the comments we received which stated that the proposed rule did not account for all of the vendor systems that will need to be updated to accommodate the new code set, we have increased our estimate of software vendor systems by 20 percent. Subsequently, we have increased our software vendor system costs from the previous $96.05 million to $115.29 million over a 4-year period, annualized at 3 percent and 7 percent as shown in Table 4.

9. System Changes—Plans

Comment: In the August 22, 2008 proposed rule (73 FR 49818), we acknowledged that revisions to payer systems may be one of the largest ICD–10 cost categories, at approximately $164.64 million, with a range of $110 million to a $274 million cost, based on data from the RAND report. We also acknowledged that not all payer system changes may have been identified in our impact analysis. Commenters stated that payer business process impacts resulting from implementation of ICD–10–CM and ICD–10–PCS would include, among others, impacts to medical policy; benefit design and coding; vendor management; data reporting; disease and case management; trend analysis and quality assurance. Commenters noted that edits will need to be updated to accommodate ICD–10's impact on auto-adjudication systems. One commenter cited a 2000 industry white paper that stated for each 100 hours spent on programming, payers must spend an addition 30–35 hours preparing specifications, conducting analysis and design sessions, performing testing and conducting other implementation-related activities. Another commercial payer estimated 8,000 programming hours for their transition from ICD–9 to ICD–10, not including specification changes or testing, while another plan estimated that it would cost between $3.00 and $5.80 per plan member to cover the cost of ICD–10 implementation. One commenter stated that integrating the expanded ICD–10 code sets into their business systems would be difficult, while another stated that detailed information on how reimbursement programs will be affected should be made available to payers at least one year before ICD–10–CM and ICD–10–PCS implementation so that payers can plan for training, financial analysis and modeling.

Response: Commenters did not provide substantiated data that would allow us to update our payer system cost estimates at this time.

We agree with commenters that there will be an impact to payer systems, and that it may be difficult to initially pinpoint all of the system changes because of the pervasive use of ICD–9 codes within payer systems. As part of our internal analysis of CMS payment systems that currently use ICD–9 code set data and would likely use ICD–10 code set data, we conducted interviews with all CMS components and identified no less than 20 systems across 30 business processes/areas that potentially would be impacted. As an example of the internal investigative process CMS undertook as part of our ongoing ICD–10 planning and analysis, CMS has shared this information with the industry through its summary report at *http://www.cms.hhs.gov/TransactionCodeSetsStands/Downloads/AHIMASummary.pdf*. We expect that once payers initiate similar ICD–10 planning and analysis activities, they will identify both known and heretofore unknown impacts to their payer systems, and can better evaluate them in terms of minimal, medium, and high impacts relative to cost and risk.

As discussed in the August 22, 2008 proposed rule (73 FR 49800), there are multiple ways for entities to integrate the ICD–10 code sets into their business settings. As the codes are incorporated into systems and processes, some providers, plans, and vendors may decide to populate the new codes throughout their entire system all at once, or translate the codes on a flow basis as they are used. Integration of the codes in many cases will be determined by the extent to which the available granularity is needed in transactions.

For purposes of this analysis, we acknowledge that the estimated payer systems costs may exceed those identified in the August 22, 2008 proposed rule. Recognizing that these payer system costs may be difficult to ascertain, and considering the comments submitted that expressed concern regarding underestimation of payer system costs, we have increased our estimate of payer systems costs by 20 percent based on comments which stated that the August 22, 2008 proposed rule did not account for all of the systems that will need to be updated to accommodate the new code set. We believe that a 20 percent increase in our estimate of payer system costs will recognize these potential unaccounted system costs and better estimate ICD–10 implementation costs. Therefore, we have increased our payer system costs from the previous $164.64 million to $197.64 million over 4 years, annualized at 3 percent and 7 percent as shown in Table 4.

As information becomes available from industry, we anticipate that it will be shared through advisory bodies such as NCVHS, and other industry communication vehicles such as association Web sites, newsletters, open door forums, conferences, etc. As information on the impact of ICD–10 transition to CMS programs becomes available, CMS plans to share information through official CMS communication vehicles as appropriate, for purposes of informing the industry's ICD–10 implementation planning.

10. System Changes—Government

Comment: In the August 22, 2008 proposed rule (73 FR 49819), we discussed potential costs to State Medicaid programs associated with the transition from ICD–9 to ICD–10. We noted the limitations of our analysis, and we estimated that it would cost approximately $102 million or about $2 million per State to transition their systems to ICD–10–CM and ICD–10–PCS. The majority of comments focused on costs of ICD–10–CM and ICD–10–PCS implementation to State Medicaid programs. A number of commenters stated that the August 22, 2008 proposed rule did not fully account for the impact of ICD–10–CM and ICD–10–PCS on State Medicaid programs. In light of those additional unaccounted for costs, some State Medicaid agencies stated that they would not be ready to

accept the new ICD–10 code sets by the proposed October 2011 compliance date, resulting in rejected claims, claims paid inappropriately, and an increase in adjustments and re-billing. Of the comments received regarding the ICD–10–CM and ICD–10–PCS conversion costs for State Medicaid agencies, none were able to offer any data to support their assertions that these conversion costs were underestimated in the August 22, 2008 proposed rule. Another commenter stated that Medicaid paper claim forms will need to be reprinted for ICD–10 codes. Four States stated that the transition to ICD–10 will increase their Medicaid Management Information Systems (MMIS) replacement costs, and that these updates could be jeopardized if their system transition from ICD–9 to ICD–10 is made too quickly. They noted that changes to MMIS, as well as legacy systems, may force them to initially run dual systems. One State Medicaid agency recommended a provision that would waive implementation of the ICD–10 code sets in any legacy system scheduled for replacement.

One commenter stated the August 22, 2008 proposed rule did not account for system conversions and training required for public programs outside of Medicaid, including the use of ICD–10 in public health reporting and surveillance systems. The commenter stated that implementation of ICD–10 would result in legacy system migration costs, and changes to longitudinal analysis for downstream data users, including State employee health plans, some social service programs, State health care, and university research and training programs. While the commenter noted these impacts, they did not provide any data that would cause us to further revise our analysis at this time. Tribal government representatives expressed concern about their costs associated with the implementation of ICD–10–CM and ICD–10–PCS, asking that the ICD–10 compliance date be moved forward to October 2013 to allow them time to achieve compliance.

A few commenters stated that we did not consult with local governments on the impacts that might result from the transition from ICD–9–CM to ICD–10–CM as required by Executive Order 13132.

Response: We agree with commenters that ICD–10 Medicaid cost estimates were understated because they were based on a very limited State survey. We anticipated that State Medicaid agencies would respond with more accurate and complete data, but they were unable to do so, with some citing current State budget uncertainties.

The ICD–10 compliance date of October 1, 2013 addresses State Medicaid agencies' concerns about not being able to be ready to accept claims with the new ICD–10 code set by the proposed October 1, 2011 date. State Medicaid agencies can approach the transition from ICD–9–CM to ICD–10–CM and ICD–10–PCS either through installation of a new MMIS system (of which 18 States are currently in various stages of procurement) that would already accommodate the ICD–10–CM and ICD–10–PCS codes; or through remediation of their current systems. Either way, States are reimbursed by the Federal government for 90 percent of the cost of ICD–10–CM and ICD–10–PCS modification to the State's Medicaid system design, development, installation or enhancement, leaving 10 percent as the state's share of the expense.

This updated information, and discussions with Medicaid subject matter experts regarding our experience with similar Medicaid implementations with the States (Y2K and NPI, for example) leads us to revise our estimates of the States' Medicaid program cost of ICD–10 implementation from $102 million, to a range of between $200 million to $400 million. Taking the midpoint of that range, or $300,000,000, we estimate that the average ICD–10 cost per State Medicaid program, at their 10 percent cost share, to be $588,235, for a State Medicaid program cost of $30 million. We estimate the remaining 90 percent cost share to the Federal Medicaid program as an average of $5.294 million per State, or a Federal Medicaid share of $270 million. Therefore, based on this new information, we have increased by $270 million the Federal government's share of the Medicaid system cost estimates, and revised the State's 10 percent cost share to $30 million, with costs annualized at 3 percent and 7 percent, respectively, as shown in Table 1.

At some Tribal programs, Medicare and Medicaid collections represent half of the operating budget of the facility and any delay or decrease in collections as a result of the transition from ICD–9–CM to ICD–10–CM will have an impact on Tribal programs' ability to provide services. The Indian Health Service (IHS) has jurisdiction over Tribal health care programs and provides the Tribes with necessary system upgrades to their Resource and Patient Management Systems (RPMS). IHS will need to invest in systems changes for all 60 RPMS software packages, integrate ICD–10–CM and ICD–10–PCS codes into their reports, train staff on new codes, and test data transmissions with payers. IHS was one of the first Federal agencies to recognize the impact of ICD–10 on their support of Tribal health services, and has taken these expenses into consideration in their estimate of their ICD–10 costs, of which the latest data were included in the proposed rule at 73 FR 49819.

HHS actively participated in NCVHS' public and open process for soliciting input on ICD–10. In the August 22, 2008 proposed rule (73 FR 49799), we discussed the number of NCVHS hearings on ICD–10, and the wide array of testifiers and comment submitters, including public health representatives. The Public Health Data Standards Consortium (PHDSC), which includes local and county health departments among their members, as well as the National Association of City and County Health Officials (NACCHO) were invited to testify. Their issues were addressed by the National Association of Health Data Organizations (a not-for-profit organization that addresses the collection, analysis, dissemination, public availability, and use of health data) which testified strongly in favor of moving to ICD–10 code set. The PHDSC and the U.S. Joint Public Health Informatics Task Force, which includes NACCHO, both submitted positive comments on our proposed rule, calling for implementation of ICD–10 by no later than October 2012. NCVHS considered all of this input, and made recommendations to adopt ICD–10–CM and ICD–10–PCS to the Secretary. These recommendations were all taken into consideration by HHS as it developed this rule.

TABLE 1—GOVERNMENT COSTS $ MILLION

Change	Government agency	Cost annualized 3%, 7%	
		3.00%	7.00%
Systems/Software Modifications and Updates:			

TABLE 1—GOVERNMENT COSTS $ MILLION—Continued

Change	Government agency	Cost annualized 3%, 7%	
		3.00%	7.00%
	CMS	$31.41	$41.17
	IHS	0.67	0.88
	VA	1.60	2.09
Subtotal		33.68	44.14
Training:			
	CMS	0.80	1.04
	IHS	0.11	0.14
	VA	3.94	5.16
Subtotal		4.84	6.35
Planning:			
	CMS	0.34	0.44
	IHS	0.25	0.33
	VA	0.21	0.27
Subtotal		0.80	1.04
Other (contractor provider inquiries)		1.06	1.38
State Medicaid Agencies		2.51	3.29
Total		42.89	56.21

Comment: A commenter stated that we should consider suspending Medicare Administrative Contractor (MAC) and RAC auditing for at least 12 months following the ICD–10 compliance date. One commenter stated that during the transition from ICD–9 to ICD–10, provider coding errors should not be used as a basis for prosecution under the False Claims Act. Another commenter noted that CMS should not unfairly penalize providers if the agency adopts a prospective budget neutrality adjustment (BNA).

Response: These comments relate specifically to ICD–10–CM and ICD–10–PCS implementation issues that will impact the Medicare program. We will take these comments under consideration, and inform the industry and other interested stakeholders through normal CMS communication channels of any decisions made relative to these issues as we plan for the transition from ICD–9–CM to ICD–10–CM and ICD–10–PCS.

11. Impact on Clinical Laboratories

Comment: A few commenters stated that neither the proposed rule nor the RAND and Nolan ICD–10 reports addressed the impacts of ICD–10 adoption on clinical laboratories. Commenters stated that clinical laboratories submit a large volume of small claims and rely on providers to submit correct codes but that obtaining missing codes, following up on and/or correcting invalid codes submitted by providers is a large administrative burden. Commenters stated that, by using ICD–10 codes, providers will be more likely to submit incorrect codes or will fail to submit them at all. Commenters also mentioned that pathologists will have to be trained in how they document the diagnoses they submit in their pathology reports, which would require an increase in medical documentation.

One commenter stated that, although they perceived an impact of the adoption of ICD–10 on clinical laboratories, the 60-day public comment period was not enough time for them to gather substantive data on that impact.

One commenter suggested that clinical labs be exempt from the requirement to adopt ICD–10–CM or at least not be required to utilize the highest degree of specificity in diagnosis coding when submitting claims.

According to some commenters, clinical laboratory systems that will be impacted include: Order entry; laboratory billing, reporting, and data warehousing; and programs, screens, reports, requisitions, forms (printed and electronic), interfaces, contracts and policy manuals. Additionally, commenters stated that use of ICD–10–CM will require more highly qualified and more expensive specialists to translate physicians' narratives into the appropriate ICD–10–CM coding. Commenters also stated that clinical labs will be responsible for educating providers as to the proper submission of diagnosis codes as well as conducting business rule development, programming, testing and implementation for hundreds of internal software programs, remapping hundreds of external interfaces as well as conducting end-to-end testing with trading partners.

An industry-sponsored report on ICD–10–CM and ICD–10–PCS costs acknowledged that ICD–10 would have an impact on clinical laboratories, but provided no substantiated data in support of that statement. The report does mention that one large national laboratory has estimated its up-front cost of implementing ICD–10–CM to be about $40 million, including IT and education costs. However it does not provide how that cost was derived, and we are unable to assess the basis for this estimate or the extent to which it may include costs already included in our assumptions.

Response: We addressed the impact of the adoption of ICD–10–CM on clinical laboratories in two areas, part-time coders and laboratories as small entities, and used the public information available to us at the time of the development of the August 22, 2008 proposed rule as a basis for our assumptions and our cost/benefit analysis. In the August 22, 2008 proposed rule (73 FR 49815), we acknowledged in Table 7 (''Ambulatory Entities Assumed To Employ Part-Time Coders Based on the 2005 Statistics of U.S. Businesses'') that 6,080 coders were likely employed by medical and diagnostic laboratories (designated as North American Industry Classification System or NAICS code 6215), and included them in our estimate of the costs of coder training. We assumed that these 6,080 coders would have training costs per coder of $550, for an estimated cost of $3.344 million.

In the August 22, 2008 proposed rule (73 FR 49828), we also noted that approximately 92 percent of medical laboratories are assumed to be small entities, with annual receipts below $9 million, and considered them in our analysis of the impact on small entities. In Table 9 (''Estimated Impact of ICD–10 Transition Cost on Inpatient and Outpatient Providers and Suppliers, Adjusted for Inflation''), we had included NAICS code 6215, which was erroneously labeled ''Medical Diagnostic and Imaging Services'' but is actually ''Medical and Diagnostic Laboratories'', for which we allocated a portion of provider systems costs based on a percent of laboratory revenues. In the August 22, 2008 proposed rule, we estimated this cost to be $5 million, for a combined cost of $8.344 million ($3.344 million based upon 6,080 laboratory coders in Table 7 in the August 22, 2008 proposed rule at $550 per coder + $5 million from Table 9 in the August 22, 2008 proposed rule). The August 22, 2008 proposed rule's Table 9 data for medical and diagnostic laboratories is updated in this final rule from $5 million to $13.14 million to account for the increase in costs, and is reflected in Table 2 and our Table 6 cost summary (which includes annualized costs at 3 percent and 7 percent), both of which appear in this final rule. This accounts for provider follow-up productivity losses as described by the commenters. Although commenters provided a great deal of qualitative information as to the impact of the ICD–10–CM transition on the clinical laboratory industry, and again, we acknowledge that it will be impacted, we did not receive any quantitative data from commenters to support a revision of our analysis of the quantitative impact of the adoption of ICD–10–CM on clinical laboratories.

Clinical laboratories cannot be exempted from the requirement to adopt ICD–10–CM. All HIPAA covered entities need to be ICD–10–ready at the same time to not disrupt claims payment and processing. Since clinical laboratories utilize ICD codes for reimbursement and submit claims to various payers, it is imperative that they implement ICD–10 at the same time as the rest of the health care industry. As to one commenter's suggestion that laboratories not use the highest degree of specificity in diagnosis coding when submitting claims, the use of the ICD–10 codes do not drive the clinical care, as previously discussed in this RIA. Laboratories should continue to code based on the information at hand, or supplied by the provider or based on the clinical test being conducted.

As we previously indicated in our discussion on medical documentation in this final rule, we also disagree with commenters who stated that pathologists would need additional training to provide correct diagnosis as a result of using ICD–10 codes. While laboratories will be responsible for working with providers to ensure proper programming and testing, these are activities that they would undertake on an ongoing basis with any new provider clients. The implementation of ICD–10 in hundreds of internal software programs, and the remapping hundreds of external interfaces as well as end-to-end testing with trading partners are similar processes that all HIPAA covered entities will be undertaking as they implement ICD–10, and are part of the generally accepted ICD–10 system implementation process. Other than the cost estimates for coder training and productivity losses, absent other quantitative data from clinical laboratories on costs, we cannot at this time project any more specific cost estimate relative to clinical laboratories' transition from ICD–9–CM to ICD–10–CM and ICD–10–PCS.

12. Impact on Pharmacies

Comment: Some commenters stated that the ICD–10 proposed rule did not account for the impact that the transition to ICD–10–CM and ICD–10–PCS would have on the pharmacy industry. One commenter stated that the adoption of the National Council of Prescription Drug Plans' Telecommunications Standard Version D.0, and increased adoption of e-prescribing, will cause an increase in diagnosis code use required by payers.

A few commenters stated that between 40 and 50 percent of prescription claim volume is associated with prescription refills. Some commenters recommended that there be a one year staggered transition period for pharmacies to implement ICD–10–CM so that authorized prescription medication refill orders can complete the reorder cycle uninterrupted. A commenter stated that for refills, pharmacies will not be able to use an ICD–9 to ICD–10 crosswalk because of the lack of one-to-one relationships but will have to contact physicians to obtain the ICD–10–CM code the prescriber has assigned to the patient. Another commenter stated that all prescription refills written prior to the compliance date for ICD–10–CM should be exempted from having to use the ICD–10–CM codes. Commenters also stated that ICD–9–CM codes are used by pharmacy benefit managers (PBMs) for disease management reporting, and for client reporting, benchmarking, and patient stratification. Commenters stated that ICD–10–CM would impact the pharmacy industry for training, systems and business process revisions, manual review of systems, outreach to providers, consumer education, cost of manual provider contact, and other considerations. Conversely, two other commenters stated that ICD–9 codes are not heavily used in pharmacies, and that impact would be minimal. None of the commenters were able to provide substantiated data to support their qualitative impact claims.

Response: NCVHS held multiple hearings and solicited comments from all industry segments regarding the potential impacts of ICD–10–CM on their respective business processes and systems. During the ongoing NCVHS process, representatives of the pharmacy industry did not indicate that the transition from ICD–9–CM to ICD–10–CM codes would be problematic and, therefore, we did not identify pharmacies as an impacted industry segment in the August 22, 2008 proposed rule's regulatory impact analysis. We now understand that ICD–9–CM codes are currently used in pharmacy settings when the patient's drug benefit plan may require a diagnosis code for purposes of prior authorization. However, the pharmacist does not assign this diagnosis code; it must be obtained by the pharmacist from the prescriber, just as it would if ICD–9–CM codes were still in use. The adoption of NCPDP Telecommunications Standard Version D.0 was overwhelmingly favored by the pharmacy industry for its ability to better support Medicare Part D requirements. We do not anticipate that the use of NCPDP Telecommunication Standard Version D.0 or the ICD–10–CM code sets in pharmacy settings will cause an increase in the requirement to use codes to report supplies/services in e-prescribing transactions and that, in fact, the use of such standards will enhance retail pharmacy transactions through their greater specificity, reducing pharmacy call-backs to physicians, and improving the efficiency of pharmacy claims submissions and accurate payments. As with other coding situations, ICD–9–CM codes will continue to be used up to and until the October 1, 2013 compliance date, at which time ICD–10–CM and ICD–10–PCS code sets will be required.

With regard to ongoing prescription refills that are written prior to, and refilled after the October 1, 2013 compliance date, we anticipate that

pharmacies will be able to use the reimbursement mappings posted to the CMS Web site to translate ICD–9–CM codes into ICD–10–CM. These mappings provide a one-to-one match of the closest ICD–9–CM to ICD–10–CM and ICD–10–PCS codes for reimbursement purposes. We also anticipate that, given the new compliance date of October 2013, this will afford the pharmacy industry ample additional time to identify and fix any outstanding refill issues.

Although commenters provided qualitative information as to the impact of the ICD–10 transition on the pharmacy industry, we did not receive any data that would allow us to offer any refined estimates of quantitative impacts to the pharmacy industry.

13. Contract Renegotiation

Comment: A number of commenters stated that the cost of contract renegotiations was not addressed in the proposed rule, and that once contracts are opened to accommodate the ICD–10 transition, many providers will want to review their negotiated rates based on revised fee schedules. Other commenters stated that it is more cost effective for payers and providers to renegotiate contracts in conjunction with their renewal dates, whereas off-cycle negotiations demand additional resources, analysis and time, which would be required under the transition to ICD–10.

A commenter mentioned that for an entire network of hospital contracts, 25 to 30 percent may be up for renewal in any given year. Another commenter stated many high-volume providers have multi-year agreements with negotiations taking months, and reimbursement terms can be the most time-consuming part of the process. Other commenters mentioned that extensive pricing analysis will be required prior to entering contract renegotiations. One commenter stated it will be difficult to price contracts because unknown provider billing patterns will create financial uncertainty for providers and payers.

Other commenters mentioned that the new coding system will cause differences in the classification of provider services and the reporting of utilization patterns. Provider contracts will require modification to account for subsequent reimbursement changes to achieve budget neutrality.

Response: In the August 22, 2008 proposed rule (73 FR 49814), we discussed the different approaches taken by RAND and Nolan with regard to the cost of contract renegotiations. RAND stated that periodic contract renegotiations are the norm in the health care payer industry, with 1-year and 3-year contract cycles being quite common. RAND assumed that the conversion to ICD–10–CM and ICD–10–PCS would introduce more issues to negotiation, but would be far less likely to spur negotiations when there otherwise would have been none.

Nolan assumed that, because ICD–10–CM and ICD–10–PCS represents changes in the underlying diagnostic and procedural coding, many if not all contracts based on code definitions and their associated reimbursement rates will require development, negotiation, review and ultimately agreement. Nolan assumed this will be a costly and time-consuming process shared by payers and providers alike. The number of contracts Nolan used for their analysis—5 to 20 per entity—is much smaller than the millions of contracts the industry has estimated because Nolan assumed that many contracts for physicians and provider groups would be standardized and would be negotiated by contracting staff rather than by physicians themselves. Nolan did not provide any separate estimates for the costs of contract renegotiation to health plans, assuming that these costs would be included in the health plans' overall costs of ICD–10–CM and ICD–10–PCS implementation.

As discussed in the August 22, 2008 proposed rule (73 FR 49814), we did not account for the costs of contract re-negotiations because we shared RAND's assumption that providers and payers must regularly renegotiate contracts in response to new policies. Contracts are renegotiated to revise the terms of the contract, usually in response to changes in policy that affect rates of reimbursement, and as we have already noted, we do not anticipate that the ICD–10–CM and ICD–10–PCS data that would constitute the basis for changes in reimbursement will be available until some time after the initial implementation of ICD–10–CM. Therefore, we believe that any cost of renegotiating contracts will be spread out over time, be undertaken at the time of the regularly scheduled contract renewal, and should be accounted for as a cost of doing business.

14. Impact on Electronic Medical Records

Comment: In the August 22, 2008 proposed rule (73 FR 49829), we discussed the impact of ICD–10 on electronic medical record (EMR) systems. Many commenters stated that the EMRs systems will be too costly to reprogram for ICD–10 code sets, but offered no examples of what those costs might be. However, one commenter estimated that only 4 percent of physicians have an extensive, fully functioning EMR system, and only 13 percent have a basic EMR system. Commenters stated the complexity of system changeovers will delay EMR adoption, put stress on practice operations and increase costs. One industry group stated that, unlike other systems, not all ICD–10 hardware and software changes for EMRs will be accommodated by the Version 5010 upgrade of vendor applications.

Response: We agree that there will be costs associated with reprogramming electronic medical record systems to accommodate the use of ICD–10. However, as both commenters and the proposed rule noted, the rate of adoption of EMRs among providers is currently very low, and the transition to ICD–10–CM and ICD–10–PCS would affect only those providers who now employ EMRs. As those providers have already made their initial investment in their EMR system and are enjoying the benefits associated with its use, we expect that they will make the necessary upgrades to allow continued use of their system. For those providers who anticipate purchasing EMR systems, they should verify with their vendors that the systems they are considering can accommodate ICD–10–CM and ICD–10–PCS codes. We also anticipate that providers who need to migrate their EMR systems to ICD–10 will work closely with their vendors to ensure successful transitions. We also agree that, for clinical and administrative functions within EMR systems that are not integrated into other systems that use Version 5010, separate hardware and/or software costs may be incurred. However, absent data from vendors and providers, we cannot at this time project any specific cost estimates relative to ICD–10 transition and EMRs.

15. General Benefits

Comment: Overall, most commenters agreed with the benefit categories outlined in the August 22, 2008 proposed rule (73 FR 49821). Some commenters stated that, although these benefits will eventually be seen from the ICD–10 transition, their size was overestimated by the August 22, 2008 proposed rule. However, no substantiated data was provided by these commenters that would provide quantifiable information to counter our assumptions or convince us to change our analysis at this time.

While many commenters agreed with the benefits outlined in the proposed rule, they also suggested other benefits that could be realized through the

transition to ICD–10. Commenters stated that these other benefits included improvement in medical knowledge and technology; the ability to substantiate the medical necessity of diagnostic and therapeutic services; the ability to demonstrate the efficacy of using technology for particular clinical conditions; and the ability to identify complications and adverse effects through the use of technology. Another commenter specifically mentioned that ICD–10–CM also permits the identification of individual fetuses in multiple gestation pregnancies which will make it possible for the first time to link a coded condition to a specific fetus.

One commenter stated that while the discussion of the benefit of ''more accurate payments for new procedures'' in the proposed rule seems to focus on Medicare payments, the benefit would apply to other payers and health plans as well.

Conversely, some commenters questioned the benefits of ICD–10. A few commenters questioned whether covered entities would really achieve more accurate payments, fewer rejected claims and fewer improper claims. Some commenters expressed doubt as to whether physician practices specifically would achieve many of the stated ICD–10 benefits. Others noted that conversion to ICD–10 would make almost 30 years of longitudinal U.S. morbidity data derived from ICD–9 virtually useless and it would be difficult to draw conclusions about trends in ICD–9 or ICD–10 translated data when aggregate comparisons assume that all hospitals are coding consistently. It was also noted that information or benchmarks were not available from previous HIPAA implementations that could validate or disprove the projected benefit assumptions.

Some commenters stated that many of the projected benefits refer to improvements in the procedure code classification system (ICD–10–PCS) and are not directly tied to ICD–10–CM adoption.

Response: As outlined in the August 22, 2008 proposed rule, we were conservative in our estimate of benefits. In many instances, we claimed only a small percentage of our calculated full benefit, and in a number of areas where we did not have quantifiable benefit data, we declined to claim any benefit whatsoever. We agree with commenters who stated that we did not account for all the benefits that could potentially be realized through the use of ICD–10–CM and ICD–10–PCS. If benefits were overestimated, as some commenters asserted, those assertions did not indicate how or to what degree we may have overestimated benefits, nor did they provide information that we could use to revise our benefits estimates.

In the proposed rule, for the benefit growth factor pre-implementation, we use the growth in national health care expenditures for years 2005–2007, with year 2007 having an estimated growth rate of 1.212. For the growth projections for years 2012 and beyond, we use the compounded growth in the U.S. population which is projected to grow at 0.008 per year.

In this final analysis we use the same approach, but rather than 2004 as the base year for the analysis, we now use expenditures from 2007 as the base year of the analysis. We then apply the 1.212 growth rate adjustment to the 100 percent benefit value for each respective benefit listed in Table 5, and use the resulting number to pro-rate the phase-in amounts based upon the identified phase-in percentage assigned for the first year in which the benefits first appear. Going forward from the year in which the regulation is implemented, we applied the population growth factor compounded by the number of years from the implementation year of the regulation (2014). We now estimate benefits at $4,539.63 million over 15 years, and annualized at 3 percent and 7 percent, as reflected in Table 7, compared with $3,950.74 million over 15 years in the August 22, 2008 proposed rule. Since the benefits estimates are now based in 2007 dollars, we updated the cost numbers to 2007 dollar for comparability.

16. Education and Outreach

Comment: Commenters stated that while there should be a set of basic ICD–10–CM and ICD–10–PCS training materials with consistent messages, education should be designed for different learning levels and audiences. Other commenters suggested the development of a detailed provider education and outreach plan with emphasis on small physician practices and software vendors; increasing the number of Medicare customer service representatives and creating a separate toll free hotline for ICD–10 questions; hosting regularly scheduled regional calls with rural providers, independent clinical laboratories, key stakeholders, physicians, and State and regional medical societies; designating a central point person to guide ICD–10–CM and ICD–10–PCS implementation and ensure consistency of materials; and development of a public access Web site for ICD–10 interpretation and guidance.

Commenters also stated that academic medical centers and teaching hospitals will be impacted by ICD–10–CM and ICD–10–PCS and should be targeted for more intense educational outreach. Commenters recommended that CMS should fund ICD–10 education and outreach programs, and pursue both paid and earned ICD–10 educational advertising.

Response: In the August 22, 2008 proposed rule (73 FR 49807), we detailed our intention to provide ICD–10 education and outreach to a wide variety of health care entities, including Medicare contractors; Fiscal Intermediaries, Carriers, and Medicare Administrative Contractors; hospitals; physicians; other providers; and other stakeholders. We stated that we will develop and make publicly available a host of tools, including extensive ''Frequently Asked Questions'' documents which will be updated as new questions and/or information arise; fact sheets; and other supporting education and outreach materials for partner dissemination. Other potential impacted groups will be targeted, and activities will be developed, based on this stakeholder input. We acknowledge that different health care professionals and entities will have different information needs, and we are beginning to address this need through educational materials posted to *http://www.cms.hhs.gov/MedLearn* and *http://www.cms.hhs.gov/ICD10/* Web sites. All materials go through extensive reviews from a number of subject matter experts prior to dissemination to the public to assure accuracy and consistency. Our free, ongoing series of roundtable and open door forum discussions tailored to specific audiences such as ESRD providers, rural providers, hospitals, etc. also address a full spectrum of stakeholder segments and concerns, including ICD–10, on a regularly scheduled basis.

Many stakeholders, through the August 22, 2008 proposed rule's public comment process, expressed their willingness to assist in disseminating information to their respective constituencies, and we will take advantage of those offers of assistance, working closely with industry in this regard.

17. Impacts on Training Programs

Comment: A commenter stated that the August 22, 2008 proposed rule did not address possible coder shortages and the need to re-certify coders. The commenter noted that implementing ICD–10 will exacerbate the current shortage of clinical coders, and did not account for the impact on formal

training programs for degree and national certificates that will need to be updated or redeveloped. Some commenters stated regular physician office staff would need to become certified coders, and current coders will need to recertify, incurring a costly exam fee. Commenters noted that ICD–10–CM and ICD–10–PCS are too technical to teach in a short amount of time. Other commenters stated that the October 2011 proposed compliance date did not allow enough time for publishers to update and revise medical coding and billing program texts and curriculum; and allow institutions to purchase, install and test the new IT systems needed to train medical coders.

Response: We have received no indication from industry, and have no reason to believe, that the changeover from ICD–9–CM to ICD–10–CM and ICD–10–PCS codes might contribute to the existing shortage of clinical coders. In fact, increased marketplace demand for coders as a result of adoption of ICD–10–CM and ICD–10–PCS may lead to more enrollment in coding curriculums and, in turn, the graduation of more and better qualified coders. Industry trade and technical school representatives have indicated their readiness to adapt to any needed curriculum changes as a result of the adoption of ICD–10, and anticipate that they will be able to produce ''ICD–10 ready'' clinical coders upon graduation from their respective institutions. As ICD–9–CM codes are currently updated annually, we anticipate that educational venues offering courses in coding would be familiar with making changes in curriculum to reflect these revisions. The final compliance date of October 1, 2013 should afford educational institutions sufficient time to change their instructional coding curriculums, and seek out and obtain appropriate educational materials and related resources.

Some hospitals may require their coders to be certified by certifying bodies such as the various national professional associations, and while desirable in the ambulatory setting, this does not appear to be a requirement for coders working in physician offices or other ambulatory settings. Coders must maintain annual continuing educational requirements to maintain their certifications. As CMS has no coding certification requirements, we refer those concerned with future certification standards to contact their applicable professional organizations.

18. Impact on Other HIT Initiatives

Comment: In the August 22, 2008 proposed rule (73 FR 49805–49806), we detailed known health information technology (HIT) initiatives and their relation to ICD–10 adoption and timing. Commenters stated that there are too many other HIT initiatives that they are being asked to embrace, creating too much competition for scant resources and time, but did not offer any substantiated data concerning potential costs associated with these other initiatives. Commenters noted that the Medicare Improvements for Patients and Providers Act (MIPPA) legislation creates e-prescribing incentives at the same time as the proposed October 2011 ICD–10 implementation date. A few health plans stated that there are multiple statewide requirements that also place demands on their available resources that would otherwise be diverted to ICD–10 implementation, but did not indicate costs associated with these requirements. Some commenters asked that the final rule for claims attachments be delayed until after the compliance date for ICD–10–CM and ICD–10–PCS.

Response: Of the 11 initiatives listed in the August 22, 2008 proposed rule, 7 of them had compliance deadlines which have already passed. These included HITSP interoperability specifications for use cases; the NPI compliance date; publication of CCHIT criteria for inpatient electronic health record products; publication of CCHIT criteria for certifying health information technology networks and systems; the NPI compliance date for small health plans; and a second set of e-prescribing final standards under Medicare Part D and adoption of the NPI for electronic prescribing transactions. Of the remaining 4 initiatives, 2 relate to compliance dates associated with the adoption of Version 5010, NCPDP Telecommunications Standard D.0, and NCPDP Medicaid Subrogation Standard 3.0, both of which are now projected for January 2012 (the Medicaid Subrogation Standard for small health plans only is projected for January 2013). The two remaining initiatives, the compliance date in the proposed rule for a new HIPAA standard for the healthcare claims attachment standard, and the proposed compliance date for the claims attachment transaction for small health plans, were scheduled for 2011 and 2012, respectively. We acknowledged in the August 22, 2008 proposed rule that implementing ICD–10 codes sets will require significant effort on the part of covered entities and their vendors, and took other HIT initiatives into consideration in establishing our proposed ICD–10 compliance date to sequence compliance in a manner that would allow covered entities to concentrate their efforts on ICD–10 implementation during the relevant period. For more information on ICD–10's relation to and impact on other HIT initiatives, see the discussion in the August 22, 2008 proposed rule (73 FR 49805).

We believe that with the new ICD–10 compliance date of October 1, 2013, there will be ample time—an additional two years from the proposed October 1, 2011 compliance date, and a year from the MIPPA 2012 e-prescribing deadline—for providers to prepare for the changeover from ICD–9 to ICD–10.

We have stated publicly, and reiterate once again, that we will not consider implementing a new HIPAA standard for claims attachment transactions until after the compliance date for ICD–10.

With regard to commenters' assertions that there are multiple State requirements that will compete with implementation of ICD–10, we believe that these requirements are not new, but constitute updates to existing State requirements that would need to be accomplished whether or not ICD–10 was implemented, and for which entities affected by these requirements are already prepared. The later compliance date of October 1, 2013 should allow ample time for HIPAA-covered entities to implement ICD–10 while meeting any applicable State requirements, and should allow for planning of future health information technology initiatives to assure there is no overlap of HIPAA standards implementations.

19. Impact on Other Entities

Comment: Commenters noted that other non-HIPAA covered entities would be impacted by the change from ICD–9 to ICD–10. They cited worker's compensation programs, which would need to update their systems that support EDI transactions, as well as the Version 5010 of the 837 transaction standard for institutional claims and/or encounters. Commenters noted that life insurers will have to enter new diagnosis codes/conditions into their underwriting decisions. Commenters stated that all reports sent from third party administrators to employer sponsors of group health plans will need to be translated into ICD–10 for longitudinal analysis to track financial and health care quality performance. A commenter stated that the OASIS data set for home health care, the inpatient rehabilitation patient assessment instrument (IRF–PAI) and the post-acute care payment reform demonstration project plan will all need to account for the cost of transitioning to ICD–10 code

sets within their respective instruments. Commenters also stated that durable medical equipment (DME) providers would be impacted because they are required to submit diagnosis codes when billing DME supplies and Medicare Part B covered services.

Response: In the August 22, 2008 proposed rule (73 FR 49805), we addressed the adoption of ICD–10–CM and ICD–10–PCS as medical data code sets under HIPAA and, therefore, did not specifically address the potential impacts of ICD–10 adoption on non-HIPAA entities.

Neither RAND nor Nolan addresses impacts of ICD–10 on non-HIPAA entities. On page 2 of the October 2003 Nolan study on ICD–10 implementation (*http://www.renolan.com/healthcare/icd10study_1003.pdf*), it notes that the study ''excludes many providers such as nursing homes, clinical labs and durable medical equipment vendors. Similarly, a large number of payer organizations have been excluded such as third party administrators, clearinghouses, and many small and medium insurers. These providers and payer entities were excluded because they were unable to develop initial cost estimates needed in the study.'' We believe that, as with Nolan's observations in their 2003 report, this is still the case. We heard from a handful of commenters who stated that the adoption of ICD–10 will have a ripple effect on life insurers, worker's compensation programs, third party administrators and similar entities, but they did not offer any quantitative data that could be used to refine the impact analysis calculation of their costs associated with the adoption of ICD–10. According to our analysis of 2005 data from the National Academy of Social Insurance's report on benefits, coverage and costs of worker's compensation programs, more than $26.2 billion in medical benefits were paid out in 2005, at an employer cost of $88.8 billion, but the administrative costs associated with worker's compensation programs are not available from this source.

From a benefits perspective, we do know that Chapter 20 of ICD–10, ''External Causes of Morbidity (V01–Y98),'' provides for the classification of environmental events and external circumstances as the cause of injury, and other adverse effects. These codes are more precise and describe a wider range of causes of injuries, which should be quite helpful to worker's compensation programs in determining the exact cause of an injury.

With regard to OASIS, IRF–PAI and the post-acute care payment reform demonstration project, the business process and systems impacts of ICD–9–CM, and subsequently ICD–10–CM and ICD–10–PCS, on these and similar instruments have already been identified. The costs associated with the implementation of ICD–10 relative to these instruments will be accounted for through CMS's ongoing ICD–1CM and ICD–10–PCS internal planning and analysis activities and will be shared with the industry once these costs have been projected.

We acknowledge that many uncertainties exist regarding the transition to ICD–10–CM and ICD–10–PCS, and that the costs and benefits associated with the transition as outlined in this final rule may not fully capture all of the impacts to the industry. In order to account for this uncertainty, we included low, high and primary estimates of the costs and benefits of transitioning to ICD–10–CM and ICD–10–PCS. These estimates may also include some uncertainty in that the costs and benefits may be higher or lower than even our low and high estimates.

Some examples of uncertainty include the acknowledgment that our estimates for physician training may not accurately reflect the number of physicians who may require or request training on ICD–10–CM and ICD–10–PCS, because we received conflicting estimates from stakeholders during the ICD–10–CM and ICD–10–PCS proposed rule comment period. Additionally, some industry studies have determined that productivity losses will be time-limited, while others have opined that productivity losses may be continuous.

We also recognize that the ICD–10–CM and ICD–10–PCS proposed rule did not account for all of the systems that may be impacted by the ICD–10–CM and ICD–10–PCS transition. Due to the complexity of the U.S. health care system, it is very difficult to determine the number and all the types of systems that will need to be updated for ICD–10–CM and ICD–10–PCS use. However, we anticipate that, upon publication of this final rule, the industry will begin its requirements gathering, development and planning activities for the ICD–10–CM and ICD–10–PCS transition. We also acknowledge that the ICD–10–CM and ICD–10–PCS benefits estimates may include some uncertainty. We did not receive many comments on the benefits estimates that were provided in the August 22, 2008 proposed rule. However, we fully anticipate that once the ICD–10–CM and ICD–10–PCS code sets are implemented, and the industry becomes more familiar and comfortable with their use, benefits may be easier to measure.

B. Regulatory Flexibility Analysis

1. Final Regulatory Flexibility Analysis

Section 604 of the Regulatory Flexibility Act (RFA) requires agencies to analyze options for regulatory relief of small entities if a final rule has a significant impact on a substantial number of small entities. For purposes of the RFA, small entities include small businesses, nonprofit organizations, and small governmental jurisdictions. Most hospitals and most other providers and suppliers are small entities, either by being nonprofit status or by qualifying as small businesses under the Small Business Administration's (SBA's) size standards (having revenues of $7.0 million to $34.5 million in any 1 year). For details, *see* the SBA's Web site at *http://sba.gov/idc/groups/public/documents/sba_homepage/serv_sstd_tablepdf.pdf* (refer to Sector 62).

In addition, section 1102(b) of the Act requires us to prepare a regulatory impact analysis if a rule may have a significant impact on the operations of a substantial number of small rural hospitals. This analysis must conform to the provisions of section 604 of the RFA. For purposes of section 1102(b) of the Act, we define a small rural hospital as a hospital that is located outside of a metropolitan statistical area and has fewer than 100 beds.

As stated in the August 22, 2008 proposed rule (73 FR 49828), we determined that about 200 nonprofit health care organizations that offer 213 health plans are considered small entities under the RFA because of their non-profit status, and that 97 percent of all physicians' practices and clinics also qualify as small entities under the RFA.

In the August 22, 2008 proposed rule (73 FR 49819), we showed the distribution of the transition costs to the ICD–10 codes for providers, suppliers, payers and software and system design firms. For calculating the impact on small entities, entities were grouped by the North American Industry Classification System (NAICS) and were presented at the firm level. The NAICS figures were adjusted based on the medical inflation factor we applied to all costs. Data were collected primarily by inpatient and outpatient categories. To allocate the transition costs, we used an available base which served as a proxy to the sub-groupings of inpatient and outpatient providers and suppliers. For the task of allocating the transition costs, we used the revenue-receipts reported in the Services Annual Survey and the National Health Expenditure Accounts, published by the U.S. Census Bureau. We grouped providers and

suppliers by inpatient and outpatient groups reflecting the level at which the data was available. In Column 3, we presented the revenue-receipts for each type of provider-supplier, insurance carrier-third party administrator, and computer design firm expected to bear transition costs. Column 4 showed the percent of the two groups' revenue-receipts each provider-supplier type comprised of the group's total. In Column 5, we applied the percentages to the total ICD–10 transition costs for each provider-supplier type.

ICD–10–CM and ICD–10–PCS transition costs per entity are calculated based on overall costs. As discussed in this final rule, we have revised our August 22, 2008 proposed rule estimates for ICD–10–CM and ICD–10–PCS training, productivity loss, and systems changes based on industry comments received during the proposed rule's comment period. We also have revised the data shown in the August 22, 2008 proposed rule's Table 9 (73 FR 49820) to account for inflation. We applied our revised costs to the number of firms and total revenue/receipts for each provider-supplier type depicted in Table 2 below in order to more accurately reflect the increase in the distribution of costs across industry segments.

Table 2 ICD–10–CM and ICD–10–PCS costs for these provider-supplier types now reflect a cost of $1,878.68 million, versus $1,087.70 million in the August 22, 2008 proposed rule's Table 9 (73 FR 49420). We also have now correctly designated NAICS Code 6512 as ''Medical and Diagnostic Laboratories'' to reflect inclusion of laboratory data in our regulatory impact analysis.

TABLE 2—ESTIMATED IMPACT OF ICD–10 TRANSITION COST ON INPATIENT AND OUTPATIENT PROVIDERS AND SUPPLIERS

[Adjusted for Inflation]

NAICS	Provider/supplier type	Firms	Revenue/ receipts ($ millions)	Percent of revenue receipts	ICD–10 costs ($ millions)	Percent ICD-10 costs of revenue receipts
622	Hospitals (General Medical and Surgical, Psychiatric and Drug and Alcohol Treatment, Other Specialty).	4,409	653,033	81.45	254.14	0.03
623	Nursing Facilities (Nursing care facilities, Residential mental retardation, mental health and substance abuse facilities, Residential mental retardation facilities, Residential mental health and substance abuse facilities, Community care facilities for the elderly, Continuing care retirement communities).	22,867	148,716	18.55	57.88	0.03
Subtotal		27,276	801,749	100	312.02	0.03
6211	Office of Physicians (firms)	189,542	330,889	61.60	1,171.92	0.03
6214	Outpatient Care Centers (Family Planning Centers, Outpatient Mental Health and Drug Abuse Centers, Other Outpatient Health Centers, HMO Medical Centers, Kidney Dialysis Centers, Free-standing Ambulatory Surgical and Emergency Centers, All Other Outpatient Care Centers).	13,624	73,966	13.80	26.09	0.03
6215	Medical and Diagnostic Laboratories	7,811	37,253	6.93	13.14	0.03
6216	Home Health Services	14,512	47,007	8.75	16.58	0.03
6219	Other Ambulatory Care Services (Ambulance and Other).	5,872	24,593	4.58	8.67	0.03
N/A	Durable Medical Equipment	404,293	23,709	4.41	8.36	0.03
Subtotal		635,654	537,417	100	1,244.76	0.03
524114, 524292	Health Insurance Carriers and Third Party Administrators [4].	4,578	723,412	100	197.60	0.01
5415	Computer System Design and Related Services	97,556	200,695	100	115.30	0.01
Subtotal		102,134	924,107		312.90	0.01
Total		765,064	2,263,273		1,878.68	

Table notes: Data for this table comes from the Statistics of U.S. Businesses 2005 tables for firms and establishments presented by employee size, and from the Bureau of the Census Services Annual Survey for 2006 that provides annual receipt-revenues by NAICS. Both data sets are available from *http://www.census.gov/econ/www.index.html*. Data on the number of Durable Medical Equipment suppliers comes from the 2007b CMS Data Compendium *http://cms/hhs.gov/DataCompendium/17_2007_Data_Compendium.asp#TopOfPage*.

Revenue data comes from the National Health Expenditures tables, 1960–2006, *http://www.cms.hhs.gov/NationalHealthExpendData/02_NationalHealthAccountsHistorical.asp#TopOfPage*. All accessed on 8–12–08. Firms data come from *http://www.census.gov/svsd/www/services/sas/sas_data/sas54.htm*, accessed 8–12–08. Revenue and receipts for each industry sector and sub-sector come from the Census Bureau Services Annual Survey for 2006 at B29. Revenue/receipt data for NAICS codes 6211–6219, 622 and 623 come from tables 8.1–8.10. Data for codes 5415 come from tables 6.1–6.21. Revenue/receipts are used to allocate ICD–10 implementation costs. Revenue/receipts were subtotaled by ambulatory provider plus DME suppliers (NAICS 62111–6219) and inpatient providers (NAICS 622, 623) and the percent of the subtotaled revenue/receipts for the provider/supplier was computed and applied to the total ICD–10 implementation costs for each of two subtotaled groupings. ICD–10 costs for ambulatory provider do not include the cost of system changes. Some costs, however, are included with inpatient system changes since large multi-campus, integrated health care facilities are likely to include their ambulatory care facilities in the cost of upgrading their information systems.

Practices of doctors of osteopathy, podiatry, chiropractors, mental health independent practitioners with annual revenues of less than $6.5 million are considered to be small entities. We estimated that 92 percent of medical laboratories, 100 percent of dental laboratories and 90 percent of durable medical equipment suppliers are also small entities under the RFA.

We also accounted for the impact of ICD–10 adoption on small insurance carriers, third party administrators and system design and related service firms. We first determined the number of entities that meet the SBA size standard. For insurance carriers and third party administrators, the SBA size standard is annual receipts of $6.5 million. For system design and related services firms, the SBA size standard is annual receipts of $23 million.

The Statistics of U.S. Businesses data (*http://www.census.gov/econ/www.index.html*) used in the August 22, 2008 proposed rule at 73 FR 49820 shows 97,556 system design and related services firms (NAICS code 5415), providing software services, data processors, computer facilities management services, computer system design services, custom programming services as well as other computer-related services. Table 3 below outlines the impact of ICD–10–CM and ICD–10–PCS on payers and computer design and related services. We have updated these data to reflect our cost revisions and include them in our calculations of our cost summary which appears in Table 6 of this final rule. We believe that our analysis supports the conclusion that implementation of ICD–10–CM and ICD–10–PCS will not impose a significant economic burden on payers and computer design and related services firms.

TABLE 3—IMPACT ON PAYERS AND COMPUTER DESIGN AND RELATED SERVICES

NAICS	Payers and system design and related services	Firms	Small entities	Revenue/ receipt ($ millions)	Small entity receipts (in millions $)	% Small entity receipts of total receipts	Total ICD–10 costs (in millions $)	Annual small entity share of ICD–10 costs (in millions $)	% Small entity implementation cost/ revenue-receipts
524114, 524292	Health Insurance Carriers and Third Party Administrators	4,578	3,449	723,412	18,309	2.53	197.60	1.2	0.01
5415	Computer Systems Design and Related Services	97,556	96,948	200,695	107,048	53.34	115.3	15.4	0.01

Because most medical providers are either non-profit or meet the SBA's size requirements for ''small entities'' for purpose of regulatory impact analyses, we generally consider all health care providers and suppliers to be small entities. Table 9 in the August 22, 2008 proposed rule and the associated discussion (73 FR 49820) showed that the transition to ICD–10–CM and ICD–10–PCS will not have a significant impact on a substantial number of small health care entities.

To come to this conclusion, as stated in the August 22, 2008 proposed rule, we estimated that small insurance carriers and third party administrators would have an ICD–10 implementation cost of $4 million, or approximately $1 million per year, for the four years that they would incur implementation costs.

A similar exercise for system design and related computer services firms yielded a cost of $51.5 million over 4 years, or $12.9 million per year. We stated that it is possible that we could be including more firms than will actually be implementing the codes.

In the August 22, 2008 proposed rule, to test our analysis, we assumed that burden would equal 3 percent of small entity revenue. This is based on HHS' May 2003 guidance on proper consideration of small entities in rule making (*http://www.hhs.gov/execsec/smallbus.pdf.pdf*) that states that if a rule imposes a burden equal to or greater than 3 percent of a firm's revenues, it is significant. We assumed small business market share would remain constant at 53 percent of the overall business market for their NAIC classification, and that the $12.9 million costs described above would be equally distributed among the small entities. In describing our calculation we stated that we took 3 percent of the total cost and computed the number of small entities for which the cost of implementing the ICD–10–CM and ICD–10–PCS codes would be a significant burden. This description of the calculation was in error. What we did was to calculate the revenue amount, of which the small entity share of the ICD–10–CM and ICD–10–PCS implementation costs would equal 3 percent. That is, we divided $12.9 million by 3 percent to yield $430 million. Then, dividing the number of small entities into the total small entity share of revenues yields an average revenue amount per small entity of $1.104 million. Finally, dividing the $430 million by the average revenue per small entity of $1.104 million yields the number of small entities of 389. This number represented the maximum number of small entities, if only that many participated in the ICD–10–CM and ICD–10–PCS implementation, for which the costs would be a significant burden.

Based on our revised estimate of costs for ICD–10 implementation, computer systems design and related services' cost share has been increased from $12.9 million to $15.4 million, the revenue level for which the costs would equal 3 percent is increased to $513 million. Again, dividing the average small entity revenue amount of $1.104 million into the $513 million yields the number of small entities (465) for which the ICD–10–CM and ICD–10–PCS implementation would become a significant burden if only that number of entities took part.

From this analysis we now estimate that if 465 or fewer small firms provide computer systems design and related services, the burden of ICD–10–CM and ICD–10–PCS implementation on them could be significant.

We also developed a scenario for a typical community hospital with 100 beds, 4,000 annual discharges and gross revenues of $200 million (see 73 FR 49830 for the details on how we calculated this implementation cost). We assumed that the hospital would experience a productivity loss in the first 6 months after implementation (based on the AHA/AHIMA 2003 ICD–10 field study and other countries' ICD–10 implementation experiences), totaling $1,233. We applied a similar methodology to determine outpatient productivity losses, using RAND's estimate that it would take 1/100 of the time it takes to code an inpatient claim to code an outpatient claim because outpatient claims do not require the use of the ICD–10–PCS code set. We applied 0.17 extra minutes per claim, at a labor charge of $50 an hour, and a cost per claim of $0.014. For the first month, the productivity loss for inpatient coding is $15.28, with a total 6-month productivity loss of $53. For systems changes and software upgrades, based on comments that claimed our system implementation costs were too low, we increased the costs to implement the

required changes from $300,000 to $1,000,000. For the sake of presenting a ''worse case'' scenario, we assume all implementation costs will be incurred or expensed within a 1-year period. This contrasts with our assumption as outlined in this final rule's RIA where we expect the costs to be incurred over a 4-year period. Along with training and productivity losses, the cost for a typical community hospital to implement the ICD–10 code sets will be $1,003,986. To determine the percent of the hospital's revenue diverted to funding its ICD–10 conversion, we divided the hospital's revenues of $200 million by the cost to convert their systems to use the ICD–10 code sets to obtain a result of 0.50 percent.

As previously discussed in this final rule, we considered alternatives for small entities to adopting the ICD–10–CM and ICD–10–PCS code sets. These included assigning new ICD–9–CM diagnosis and procedure codes where needed using the remaining unassigned codes and ignoring the hierarchy of the ICD–9–CM code set; using CPT–4 for coding hospital inpatient procedures; and skipping ICD–10 and waiting until ICD–11 is ready for use in the United States and adopting ICD–11 at that time. We also considered phasing in the implementation of the new codes by geographic region or by large versus small entities. Another option was for small entities to maintain dual coding systems for a period of time; or to delay implementation for small entities. All of these options were reviewed and rejected for the reasons discussed in the August 22, 2008 proposed rule at 73 FR 49826.

2. Response to Comments on Small Entities

Comment: For purposes of our analysis pursuant to the RFA, nonprofit organizations are generally considered small entities; however, individuals and states are not included in the definition of a small entity. Because most medical providers are either nonprofit or meet the SBA's size standard for small businesses for purposes of regulatory analysis, we treat all medical providers as small entities.

Many commenters representing small physician practices and healthcare-related associations stated that the cost of implementing ICD–10-CM as early as October 2011, shortly after the NPI implementation, might bankrupt small physician practices. Some commenters disputed our cost estimates for small entities as being too low, but none offered quantitative data on the impact of ICD–10 on their small practices. Commenters generally made vague references to anticipated costs due to delayed reimbursements, lost productivity and costs of training, and outlays for software and hardware, and asked that the compliance date be pushed back. Some commenters stated that they will have difficulty integrating ICD–10 codes into their systems and business functions.

One commenter stated that the number of ICD–10 codes makes printing the code set in book form prohibitive, and that because of this, small providers will be forced to purchase electronic systems and software. Some commenters from small practices stated that they do not have electronic systems to support ICD–10, and cannot afford to hire additional staff or re-train existing staff in ICD–10 coding. A few small practices stated that they will need additional time in which to become compliant with the new code sets, while others disagreed, and stated that allowing small practices to continue to use ICD–9 while other industry segments use ICD–10 code sets would cause serious claims processing and reimbursement problems.

Response: As detailed in the August 22, 2008 proposed rule (73 FR 49808), the Regulatory Flexibility Act (RFA) requires agencies to analyze options for the regulatory relief of small entities. As previously explained, our analysis presumed that all medical providers were small entities. While we did not estimate that the cost of ICD–10 implementation per small physician practice would be substantial, we did acknowledge that, given the large number of affected entities, the aggregate total cost to the industry as a whole could be substantial.

Of those commenters identifying themselves as small practices, all but one did not dispute the need to move to ICD–10, but stated the timing of our proposed October 2011 compliance date was problematic because small practices do not have the financial and/or other resources (staff, technology, etc.) to quickly make the move from ICD–9–CM to ICD–10–CM. As the compliance date has been moved to October 2013, we anticipate that this will afford small practices the time they need to spread any costs associated with the implementation of ICD–10 in their practices over a longer period of time.

As discussed previously in this final rule, there are multiple ways for small entities to integrate the ICD–10 code sets into their business settings, either populating the new codes throughout their entire system all at once, or integrating the codes on a flow basis as they are used.

Additionally, any small practices may continue to submit paper claims, using preprinted forms that include all of the appropriate codes required for use in such practices. In most instances, practitioners in small practices may assign the diagnosis themselves and may include the ICD–10 code on the paper billing form. The use of the ICD–10 code sets is not predicated on the use of electronic hardware and software. The ICD–10 code set has already been produced in a book version of ICD–10–CM that measures only 2 inches in depth; the book version of ICD–10–PCS measures 1 inch in depth. Vendors have indicated that they are in the process of developing both paper-based and software products for purchase once ICD–10 is implemented. For those small practices that have already migrated to electronic systems and wish to purchase software, a CD of the ICD–10 code set will be made available through the U.S. Government Printing Office (GPO). The ICD–9–CM CD, also sold through the GPO, has been priced at less than $30 for many years, and we expect an ICD–10–CM CD, when available, to be comparably priced. We do not believe this purchase price to be burdensome to small providers.

Also, as previously noted in this final rule, the ICD–10–PCS code set is available at no charge on the CMS Web site at *http://www.cms.hhs.gov/ICD10/02_ICD-10-PCS.asp#TopOfPage.* The ICD–10–CM code set is also available free of charge on the NCHS Web site at *http://www.cdc.gov/nchs/about/otheract/icd9/icd10cm.htm.* Both of these Web sites also feature the previously referenced tools such as crosswalks and guidelines for downloading at no charge.

As previously discussed in this impact analysis, we believe that there will be a plethora of training opportunities through the Internet, in-services, hospital-based training, association educational programs, medical and medical specialty associations, etc., and that the marketplace will make the appropriate ICD–10 training available to small providers in the most efficient manner possible, recognizing that solo practitioners and their staffs cannot afford extensive amounts of time away from their offices to partake in training.

Finally, as previously discussed in this final rule, we agree with commenters who stated a phased-in approach to ICD–10 implementation to allow more time for small entities to transition to ICD–10 is not feasible because the use of dual coding systems would result in burdensome costs to industry, confusion as to which code set

was being used in claims submission, and which payers are capable of accepting the new codes. The result would be massive claims processing delays and lagging reimbursements to providers.

3. Conclusion

We did not receive any data or information to substantiate arguments that our impact analysis of the potential effects of ICD–10 implementation on small entities was flawed. We, therefore, maintain our small entity ICD–10 impact assumptions based on the Regulatory Flexibility Analysis section of the proposed rule at 73 FR 49827. Based on the foregoing analysis, the Secretary certifies that this final rule will not have a significant economic impact on a substantial number of small entities.

TABLE 4—SUMMARY OF ESTIMATED COSTS IN $ MILLIONS ANNUALIZED 3%, 7%

		Low		High		Primary	
		3.00%	7.00%	3.00%	7.00%	3.00%	7.00%
Training:							
	Inpatient Coders	$8.88	$11.64	$35.53	$46.57	$17.76	$23.28
	Outpatient Coders	5.01	6.57	20.05	26.28	10.03	13.14
	Code Users	2.26	2.96	4.61	6.04	3.45	4.52
	Physicians	43.69	57.27	235.07	308.11	87.38	114.53
Productivity Losses:							
	Inpatient	0.00	0.00	4.61	6.04	0.82	1.07
	Outpatient	0.00	0.00	4.61	6.04	0.79	1.03
	Physician Practices	0.46	0.60	2.26	2.96	1.01	1.33
	Improper and returned claims	22.95	30.08	92.14	120.77	45.53	59.67
Systems Changes:							
	Providers	4.61	6.04	18.43	24.15	12.62	16.54
	Software Vendors	4.83	6.33	19.31	25.32	9.66	12.66
	Payers	8.28	10.85	33.11	43.40	16.56	21.70
	Government Systems	21.44	28.11	85.77	112.42	42.89	56.21

TABLE 5—SUMMARY OF ESTIMATED BENEFITS IN $ MILLIONS ANNUALIZED 3%, 7%

	Low estimate		High estimate		Primary estimate	
	3%	7%	3%	7%	3%	7%
More accurate payments for new procedures	$49.77	$65.24	$199.09	$260.95	$99.54	$130.47
Fewer rejected claims	48.88	64.07	195.51	256.26	97.76	128.13
Fewer improper claims	24.44	32.03	97.75	128.12	48.87	64.06
Better understanding of new procedures	41.32	54.15	165.26	216.61	82.63	108.31
Improved disease management	25.73	33.73	102.93	134.91	51.46	67.45

BILLING CODE 4120–01–P

Table 6: Annual estimated costs over 15 years for ICD-10 (in $ millions) discounted 3%, 7%

Year		2011	2012	2013	2014	2015	2016	2017	2018	2019	2020	2021	2022	2023	2024	2025	Present Value (3%)	Present Value (7%)
Training	Inpatient Coders	0	0	31.81	159.04	21.21	0	0	0	0	0	0	0	0	0	0	$188 71	$162.42
	Outpatient Coders (ambulatory)	0	0	11.97	95.75	11 97	0	0	0	0	0	0	0	0	0	0	$106.35	$91.35
	Code Users	0	0	4.12	32.94	4.12	0	0	0	0	0	0	0	0	0	0	$36.59	$31.43
	Physicians	0	0	104.31	834.52	104 31	0	0	0	0	0	0	0	0	0	0	$926.90	$796 17
	Subtotal	$0 00	$0.00	$152.21	$1,122.25	$141.61	$0.00	$0 00	$0 00	$0.00	$0 00	$0 00	$0.00	$0.00	$0.00	$0.00	$1,258.55	$1,081.37
Productivity Losses	Coders-- Inpatient	0	0	0	9.77	0	0	0	0	0	0	0	0	0	0	0	$8.68	$7.45
	Coders--Outpatient	0	0	0	9.4	0	0	0	0	0	0	0	0	0	0	0	$8.35	$7 17
	Physician Practices	0	0	0	12 08	0	0	0	0	0	0	0	0	0	0	0	$10.73	$9.22
	Improper and returned claims	0	0	0	0	329 4	164.7	49.41	0	0	0	0	0	0	0	0	$462.25	$375.37
	Subtotal	$0.00	$0 00	$0.00	$31.25	$329 40	$164.70	$49 41	$0 00	$0 00	$0.00	$0.00	$0.00	$0.00	$0.00	$0.00	$490 02	$399.21
System changes	Providers	22.6	45.19	75 32	7 53	0	0	0	0	0	0	0	0	0	0	0	$140.16	$127.82
	Software Vendors	17.29	34 59	57 65	5.76	0	0	0	0	0	0	0	0	0	0	0	$107.27	$97.82
	Payers	29 65	59 29	98.82	9 88	0	0	0	0	0	0	0	0	0	0	0	$183 89	$167.70
	Government	76.79	153.59	255.98	25 6	0	0	0	0	0	0	0	0	0	0	0	$476 33	$434.40
	Subtotal	$146.33	$292.66	$487.77	$48.77	$0.00	$0 00	$0.00	$0 00	$0 00	$0.00	$0.00	$0.00	$0.00	$0.00	$0.00	$907.64	$827.75
Total Cost (in $millions)		$146.33	$292.66	$639.98	$1,202.27	$471.01	$164.70	$49.41	$0.00	$0.00	$0.00	$0.00	$0.00	$0.00	$0.00	$0.00	$2,656.21	$2,308.34

BILLING CODE 4120–01–C

TABLE 7—ANNUAL ESTIMATED BENEFITS OVER 15 YEARS FOR ICD–10 (IN $ MILLIONS) DISCOUNTED 3%, 7%

Year	2011	2012	2013	2014	2015	2016	2017	2018	2019	2020	2021	2022	2023	2024	2025	Present value (3%)	Present value (7%)
More-accurate payment for new procedures	0	0	0	0	21.88	58.41	72.89	85.12	97.46	109.93	122.55	135.34	148.32	161.51	174.94	$854.27	$564.25
Fewer rejected claims	0	0	0	0	30.42	60.89	97.51	121.59	122.08	122.17	122.27	122.37	122.47	122.57	122.66	854.29	577.50
Fewer improper claims	0	0	0	0	15.22	30.44	48.75	60.79	61.03	61.08	61.13	61.18	61.23	61.28	61.33	427.12	288.73
Better understanding of new procedures	0	0	0	0	29.18	77.88	97.19	97.5	97.58	97.66	97.74	97.81	97.89	97.97	98.05	727.42	496.71
Improved disease management	0	0	0	0	9.92	19.86	52.99	66.08	66.34	66.4	66.45	66.5	66.56	66.61	66.66	447.49	300.31
Total Benefits (in millions)	$0.00	$0.00	$0.00	$0.00	$106.62	$247.48	$369.33	$431.08	$444.49	$457.24	$470.14	$483.20	$496.47	$509.94	$523.64	$3,310.58	$2,227.51

TABLE 8—ACCOUNTING STATEMENT: CLASSIFICATION OF ESTIMATED EXPENDITURES, FROM FY 2011 TO FY 2025

[in millions]

Category	Primary estimate (millions)	Low estimate (millions)	High estimate (millions)	Source citation (RIA, preamble, etc.)
BENEFITS:				
Annualized monetized benefits:				
7% Discount	$244.6	$90.0	$269.4	RIA
3% Discount	$277.3	$102.2	$305.4	RIA
Qualitative (unquantified) benefits	Improved biosurveillance and global disease management.			RIA
COSTS:				
Annualized monetized costs:				
7% Discount	$253.4	$59.7	$278.8	RIA
3% Discount	$222.5	$51.9	$24.8	RIA
Qualitative (unquantified) costs	None	None	None	
Transfers:				
Annualized monetized transfers: "on budget"	N/A	N/A	N/A	
From whom to whom?	N/A	N/A	N/A	
Annualized monetized transfers: "off-budget"	N/A	N/A	N/A	
From whom to whom?	N/A	N/A	N/A	

List of Subjects in 45 CFR Part 162

Administrative practice and procedures, Electronic transactions, Health facilities, Health Insurance, Hospitals, Incorporation by reference, Medicaid, Medicare, Reporting and recordkeeping requirements.

■ For the reasons set forth in this preamble, the Department of Health and Human Services amends 45 CFR part 162 as follows:

PART 162—ADMINISTRATIVE REQUIREMENTS

■ 1. The authority citation for part 162 is amended to read as follows:

Authority: Secs. 1171 through 1180 of the Social Security Act (42 U.S.C. 1320d–1320d–9), as added by sec. 262 of Pub. L. 104–191, 110 Stat. 2021–2031, and sec. 105 of Pub. L. 110–233, 122 Stat. 881–922, and sec. 264 of Pub. L. 104–191, 110 Stat. 2033–2034 (42 U.S.C. 1320d–2(note)).

■ 2. Section 162.1002 is amended by revising paragraph (b) introductory text and adding paragraph (c) to read as follows.

§ 162.1002 Medical data code sets.

* * * * *

(b) For the period on and after October 16, 2003 through September 30, 2013:

* * * * *

(c) For the period on and after October 1, 2013:

(1) The code sets specified in paragraphs (a)(4), (a)(5), (b)(2), and (b)(3) of this section.

(2) International Classification of Diseases, 10th Revision, Clinical Modification (ICD–10–CM) (including The Official ICD–10–CM Guidelines for Coding and Reporting), as maintained and distributed by HHS, for the following conditions:

(i) Diseases.

(ii) Injuries.

(iii) Impairments.

(iv) Other health problems and their manifestations.

(v) Causes of injury, disease, impairment, or other health problems.

(3) International Classification of Diseases, 10th Revision, Procedure Coding System (ICD–10–PCS) (including The Official ICD–10–PCS Guidelines for Coding and Reporting), as maintained and distributed by HHS, for the following procedures or other actions taken for diseases, injuries, and impairments on hospital inpatients reported by hospitals:

(i) Prevention.

(ii) Diagnosis.

(iii) Treatment.

(iv) Management.

(Catalog of Federal Domestic Assistance Program No. 93.778, Medical Assistance Program) (Catalog of Federal Domestic Assistance Program No. 93.773, Medicare—Hospital Insurance; and Program No. 93.774, Medicare—Supplementary Medical Insurance Program)

Dated: December 11, 2008.

Michael O. Leavitt,

Secretary.

[FR Doc. E9–743 Filed 1–15–09; 8:45 am]

BILLING CODE 4120–01–P

Federal Register

Friday,
January 16, 2009

Part VII

Department of Homeland Security

Coast Guard

33 CFR Parts 155 and 157

46 CFR Part 162

Pollution Prevention Equipment; Final Rule

DEPARTMENT OF HOMELAND SECURITY

Coast Guard

33 CFR Parts 155 and 157

46 CFR Part 162

[Docket No. USCG–2004–18939]

RIN 1625–AA90

Pollution Prevention Equipment

AGENCY: Coast Guard, DHS.

ACTION: Interim rule; request for comments.

SUMMARY: The Coast Guard is amending its oil pollution prevention equipment regulations to make them consistent with new International Maritime Organization (IMO) guidelines and specifications issued under the International Convention for the Prevention of Pollution from Ships (MARPOL) Annex I. These revisions will implement MARPOL Annex I regulations and are intended to reduce the amount of oil discharged from vessels and eliminate the use of ozone-depleting solvents in equipment tests. This interim rule will require all vessels replacing or installing oil separators and bilge alarms to install equipment that meets revised standards and it will require newly constructed vessels carrying oil in bulk to install monitoring systems that meet the revised standards. We have delayed the implementation of three paragraphs involving vessels constructed and equipment installed on or after January 1, 2005. We seek comments on these three paragraphs and will consider those comments before issuing a final rule.

DATES: *Effective dates:* This interim rule is effective March 17, 2009, with the exception of paragraphs 33 CFR 155.350(a)(3), 155.360(a)(2), and 155.370(a)(4), which are effective October 13, 2009.

Comment date: Comments on paragraphs 33 CFR 155.350(a)(3), 155.360(a)(2), and 155.370(a)(4) must reach the Docket Management Facility on or before April 16, 2009.

Incorporation by reference: The incorporation by reference of certain publications listed in the regulations is approved by the Director of the Federal Register as of March 17, 2009.

ADDRESSES: You may submit comments identified by docket number USCG–2004–18939 using any one of the following methods:

(1) *Federal eRulemaking Portal: http://www.regulations.gov.*

(2) *Fax:* 202–493–2251.

(3) *Mail:* Docket Management Facility (M–30), U.S. Department of Transportation, West Building Ground Floor, Room W12–140, 1200 New Jersey Avenue, SE., Washington, DC 20590–0001.

(4) *Hand delivery:* Same as mail address above, between 9 a.m. and 5 p.m., Monday through Friday, except Federal holidays. The telephone number is 202–366–9329.

To avoid duplication, please use only one of these methods. For instructions on submitting comments, see the ''Public Participation and Request for Comments'' portion of the **SUPPLEMENTARY INFORMATION** section below.

FOR FURTHER INFORMATION CONTACT: If you have questions on this interim rule, call Mr. Wayne Lundy, Systems Engineering Division (CG–5213), Office of Design and Engineering Standards, U.S. Coast Guard, telephone 202–372–1379. If you have questions on viewing or submitting material to the docket, call Renee V. Wright, Program Manager, Docket Operations, telephone 202–366–9826.

SUPPLEMENTARY INFORMATION:

Table of Contents

I. Public Participation and Request for Comments
A. Submitting comments
B. Viewing comments and documents
C. Privacy Act
D. Public meeting
II. Abbreviations
III. Regulatory History
IV. Background and Purpose
A. Types of Equipment
B. Authority
C. International Standards Being Implemented
V. Discussion of Comments and Changes
A. Test and Performance
B. Measurement of Oil Content
C. Calibration
D. Training
E. Operating Requirements
F. Simulated Shipborne Environment
G. Operating Manual
H. Applicability
I. PPE Alternatives
J. Data Recording
K. Test Rig
L. Response Time
M. Test Fluid
N. Incorporating MEPC.107(49) by Reference
O. Test Report
P. Cleaning Detergent in Engine Room
Q. PPE Design
R. Oil Categories
S. Beyond the Scope of This Rulemaking
T. Changes from Proposed Rule
VI. Incorporation by Reference
VII. Regulatory Analyses
A. Regulatory Planning and Review
B. Small Entities
C. Assistance for Small Entities
D. Collection of Information
E. Federalism
F. Unfunded Mandates Reform Act
G. Taking of Private Property
H. Civil Justice Reform
I. Protection of Children
J. Indian Tribal Governments
K. Energy Effects
L. Technical Standards
M. Environment

I. Public Participation and Request for Comments

We encourage you to participate in this rulemaking by submitting comments and related materials. All comments received will be posted, without change, to *http://www.regulations.gov* and will include any personal information you have provided.

A. Submitting Comments

If you submit a comment, please include the docket number for this rulemaking (USCG–2004–18939), indicate the specific section of this document to which each comment applies, and provide a reason for each suggestion or recommendation. You may submit your comments and material online, or by fax, mail or hand delivery, but please use only one of these means. We recommend that you include your name and a mailing address, an e-mail address, or a phone number in the body of your document so that we can contact you if we have questions regarding your submission.

To submit your comment online, go to *http://www.regulations.gov*, select the Advanced Docket Search option on the right side of the screen, insert ''USCG–2004–18939'' in the Docket ID box, press Enter, and then click on the balloon shape in the Actions column. If you submit your comments by mail or hand delivery, submit them in an unbound format, no larger than 8½ by 11 inches, suitable for copying and electronic filing. If you submit them by mail and would like to know that they reached the Facility, please enclose a stamped, self-addressed postcard or envelope. We will consider all comments and material received during the comment period and may change this rule based on your comments.

B. Viewing Comments and Documents

To view comments, as well as documents mentioned in this preamble as being available in the docket, go to *http://www.regulations.gov*, select the Advanced Docket Search option on the right side of the screen, insert USCG–2004–18939 in the Docket ID box, press Enter, and then click on the item in the Docket ID column. If you do not have access to the internet, you may view the

docket online by visiting the Docket Management Facility in Room W12–140 on the ground floor of the Department of Transportation West Building, 1200 New Jersey Avenue, SE., Washington, DC 20590, between 9 a.m. and 5 p.m., Monday through Friday, except Federal holidays. We have an agreement with the Department of Transportation to use the Docket Management Facility.

C. Privacy Act

Anyone can search the electronic form of comments received into any of our dockets by the name of the individual submitting the comment (or signing the comment, if submitted on behalf of an association, business, labor union, etc.). You may review a Privacy Act notice regarding our public dockets in the January 17, 2008 issue of the **Federal Register** (73 FR 3316).

D. Public Meeting

We do not now plan to hold a public meeting. But you may submit a request for one to the Docket Management Facility at the address under **ADDRESSES** explaining why one would be beneficial. If we determine that one would aid this rulemaking, we will hold one at a time and place announced by a later notice in the **Federal Register**.

II. Abbreviations

API	American Petroleum Institute
CFC 113	Chlorofluorocarbon-113
CFR	Code of Federal Regulations
DHS	Department of Homeland Security
EPA	Environmental Protection Agency
FR	**Federal Register**
GC Method	Replacement hydrocarbon-gas chromatography method
GMT	Greenwich Mean Time
IMO	International Maritime Organization
IOPP	International Oil Pollution Prevention
IR method	Freon-infrared spectrophotometer method
ISO	International Organization for Standardization
MARPOL	International Convention for the Prevention of Pollution from Ships
MEPC	Marine Environment Protection Committee
NARA	National Archives and Records Administration
NEPA	National Environmental Policy Act
NPDES	National Pollution Discharge Elimination Standards
NPRM	Notice of Proposed Rulemaking
NTTAA	National Technology Transfer and Advancement Act
OCIMF	Oil Companies International Marine Forum
OMB	Office of Management and Budget
ORB	Oil Record Book
OWS	Oily-Water Separator
PPM	Parts Per Million
§	Section symbol
SRM	Standard Reference Material
UL	Underwriters Laboratories, Inc.
U.S.C	United States Code
USDA	United States Department of Agriculture

III. Regulatory History

On November 3, 2005, we published a notice of proposed rulemaking (NPRM) entitled ''Pollution Prevention Equipment'' in the **Federal Register** (70 FR 67066). We received 17 letters containing 80 comments on the proposed rule. No public meeting was requested and none was held.

On December 15, 2005, we published a correction notice in the **Federal Register** (70 FR 74259). The NPRM, as published, contained the phrase ''must be limited'' at two points, once in the preamble and once in the regulatory text. We deleted that phrase because it was inserted by error and could have confused readers.

IV. Background and Purpose

This interim rule will implement international standards for oil pollution prevention equipment designed for ships and oil tankers. These standards address the testing, certification, and approval for oil pollution prevention equipment, including discharge monitors, which will help prevent oily discharges from a ship into the water.

A. Types of Equipment

There are two types of equipment involved in this rulemaking that deal with oil, water, and other substances that collect in the machinery space bilges of ships:

A *bilge separator* (also referred to as oily-water separator), is designed to produce an effluent from the bilge of ships with oil content of 15 parts per million (ppm) or less; and

A *bilge alarm* is designed to activate an automatic stopping device when the oil content concentration exceeds 15 ppm, and thus stop any discharge overboard of oily-mixtures with an oil content exceeding 15 ppm.

This rulemaking also involves equipment used on tankers to process oil-tanker ballast and tank-washing water. The *oil discharge monitoring and control system (''monitoring system'')* monitors the discharge into the sea of oily ballast or other oil-contaminated water from the cargo tank areas. This monitoring system contains an *oil content meter* (hereinafter *''meter''*) that measures the oil content of the effluent in ppm.

B. Authority

The Coast Guard has authority to issue this regulation. Under the Act to Prevent Pollution from Ships, Public Law 96–478, sections 2 and 4, 94 Stat. 2297, 2298 (Oct. 21, 1980), 33 U.S.C. 1901 and 1903, the Secretary of the Department in which the Coast Guard is operating is authorized to prescribe any necessary or desired regulations to carry out the provisions of the Act and of Annex I (Regulations for the prevention of pollution by oil) of the International Convention for the Prevention of Pollution from Ships, 1973, as modified by the Protocol of 1978 relating to that Convention (MARPOL 73/78). Under the Act of August 26, 1983, Public Law 98–89, 97 Stat. 500, 504, 522, subtitle II of title 46 of the U.S. Code (46 U.S.C.), specifically 46 U.S.C. 3703, the Secretary in which the Coast Guard is operating is authorized to issue

equipment regulations, and related maintenance and training regulations for vessels carrying liquid bulk dangerous cargo, including oil. Authority under both of these acts has been delegated to the Coast Guard under Department of Homeland Security Delegation No. 0170.1(2)(77) and (92)(b).

C. International Standards Being Implemented

This rulemaking implements revisions to the international oil pollution prevention standards for ships in MARPOL Annex I, specifically regulations 14, 18, and 31. Under Article 38 of the Convention on the International Maritime Organization (IMO), the IMO Marine Environment Protection Committee (Committee) is designated to consider IMO matters involving the prevention and control of marine pollution from ships.

In 1992, during its 33rd session, the Committee adopted a resolution, MEPC.60(33), containing guidelines and specifications for pollution prevention equipment for machinery space bilges of ships. In 2003, recognizing the advancement of technology since 1992, the Committee adopted resolution MEPC.107(49), which contained new guidelines and specifications that superseded those adopted in 1992.

The MEPC.107(49) changed the fluids used to test pollution prevention equipment so they would more closely represent the bilge wastes encountered on vessels. Emulsified oil in water, surfactants (for example, detergents), and other contaminants are typically found in bilge water. Under MEPC.107(49), the bilge separator must be capable of separating the oil from the emulsion to produce an effluent with an oil content not exceeding 15 ppm.

The MEPC.107(49) also changed the method by which oil content is measured in effluent samples during the approval process. Past methods permitted the use of ozone-depleting solvents, specifically carbon tetrachloride and Freon 113 (CFC 113). Both an international treaty and United States laws call for phasing out the use of these solvents. See the Montreal Protocol on Substances that Deplete the Ozone Layer (''Montreal Protocol''), Sept. 16, 1987, 26 I.L.M. 1550, and Title VI of the Clean Air Act, 42 U.S.C. 7671–7671q. Accordingly, MEPC.107(49) specifies a different test method that does not use ozone-depleting solvents.

The MEPC.107(49) guidelines and specifications were incorporated into Annex I after the 2004 adoption of resolution MEPC.117(52), which led to the revision of MARPOL Annex I. On January 1, 2007, the revised Annex I came into force. Resolution MEPC.107(49) is incorporated into Regulation 14 (Oil filtering equipment) of the revised Annex I.

Additionally, in 2003, the Committee also adopted resolution MEPC.108(49), which revised guidelines and specifications for oil discharge monitoring and control systems for oil tankers constructed after 2004. These new guidelines and specifications were incorporated into Regulations 18 (Segregated Ballast Tanks) and 31 (Oil discharge monitoring and control system) of the revised Annex I and apply to oil content meters as part of oil discharge monitoring and control systems installed on tankers constructed after 2004. Because of revisions to MARPOL Annex II, effective January 1, 2007, neither resolution MEPC.108(49) nor the resolution it is replacing, A.586(14), are referenced in Annex II.

The new MEPC.108(49) guidelines and specifications call for:

- Only one category of a monitoring system to apply to all tankers of 150 gross tonnage and above;
- The monitoring system to be able to record position (latitude and longitude) from a vessel-position indicating device, allowing more accurate input of speed parameters;
- Greater control of oil mixture discharges by tightening the accuracy requirements for both the oil content meter and the flowmeter; and
- A more objective specification for identifying crude oils: Simply by number and assigned characteristics and parameters—such as density, viscosity, and cloud point—rather than geographical denominations used in Resolution A.586(14).

See IMO Subcommittee on Ship Design and Equipment Report to the Maritime Safety Committee, DE 46/32 at 12 & 13 (April 4, 2003).

V. Discussion of Comments and Changes

In response to our NPRM, we received a total of 80 comments reflected in the 73 issues presented below.

A. Test and Performance

Commenters raised 18 issues regarding the testing and performance of PPE.

Issue 1: One commenter stated that the paragraph 1.2.15, Shutoff test in the Annex to MEPC.108(49) for the oil content meter (''meter''), should be renamed the ''Dry Operation While Energized Test'' and that to ensure that our regulation achieves its apparent purpose—allowing observation of the reaction of a non-lubricated meter, the shutoff time should be increased to at least 24 hours.

Response: The Coast Guard disagrees. The duration of shutoff we specify in 46 CFR 162.050–27(k) matches MEPC.108(49): 8 hours. This simulates a short period of inactivity of the meter, and thus we believe the current title is accurate. Adding 1 to 2 days to this test is not necessary. Our shutdown and restart test in 46 CFR 162.050–27(n) maintains the existing 1-week shutdown requirement.

While we did not change the title of the Shutoff test, this and other comments demonstrated the need to better align our terms with MEPC.108(49) as well as our current pollution certificate requirements in 33 CFR part 151, subpart A. In aligning with MEPC.108(49), we have removed the term ''cargo monitor'' because it can be interpreted either as a oil content meter or oil discharge monitoring and control system (''monitoring system''). In 33 CFR part 157, we no longer use ''cargo monitor'' to identify the ''monitoring system.'' Also, in 46 CFR part 162, we have replaced the term ''cargo monitor'' with the term ''oil content meter.'' In defining ''oil content meter'', we used the same definition for ''cargo monitor'' in the proposed rule, except that we removed a reference to a recordkeeping function. To ensure uniformity in the CFR parts involved, we made nomenclature changes in some sections or paragraphs that were not included in the proposed rule: §§ 155.380(a) and (b), 157.03 ''clean ballast'' definition paragraph (2), 157.11(b)(2)(iii), 157.37(a)(6), (c) and (d), 157.43(a) and (b), 162.050–5(a)(8), 162.050–7(i), 162.050–11(a) and (b)(8), and 162.050–19(a) and (c).

Issue 2: After discussing the 8-hour shutoff test in paragraph 2.2.8 of the Annex to MEPC.107(49), which was reflected in § 162.050–35(e) of our proposed rule, one commenter said that the 46 CFR subpart 162.050 test protocol requiring bilge alarms to be shutoff for 7 days should be retained as the true ''ShutOff'' test.

Response: The current requirement in § 162.050–35(i), Test No. 7A , specifies that the bilge alarm be shutoff for 1 week and then tested. We have retained this useful 1-week shutoff test in § 162.050–35(i) of the interim rule and renamed it ''Test No. 8A Shutdown and Restart Test.'' We have also retained the 8-hour shutoff test appearing in § 162.050–35(e), Test No. 4A Shutoff Test, of the proposed rule. We made no changes from the proposed rule based on this comment.

Issue 3: One commenter stated that the ''Calibration and Zero Test'',

paragraph 1.2.5 of the Annex to MEPC.108(49), uses ''calibration'' for what we would classify as ''capability,'' and that this test should be run as a comparative test with the influent and effluent sampled as the cargo monitor (monitoring system) output display is read and recorded. The commenter also stated the value of the influent and effluent should be within ±10 parts per million (ppm) of the cargo monitor display at the time of sampling.

Response: The Coast Guard disagrees with the commenter. We believe that this test constructs a calibration curve up to the maximum capability of the equipment. The fact that this test also establishes the capability of the unit is secondary to its intended purpose. However, this comment has revealed that this testing requirement was insufficiently written in the NPRM as it did not specifically mention the creation of a calibration curve. The regulatory text in 46 CFR 162.050–27(b) and (c) has been revised to correct this omission.

Regarding the ±10 ppm comment, this was addressed in proposed § 162.050–7(i)(2) (Approval procedures), which we did not change in the interim rule.

Issue 4: One commenter said that the ''Oil Fouling and Calibration Shift Test'', paragraph 1.2.9 of the Annex to MEPC.108(49), should be a comparative test with the only other requirement being that the monitoring system be capable of being cleaned or self-cleaned from the influent. The commenter also noted that using the test stand's current configuration may allow heavy oil to permeate the fittings on the test stand plumbing and cause fluctuations in the influent concentration.

Response: This comment made us realize that we should have included a sentence from MEPC.108(49) in our proposed rule. To correct this omission, we have redesignated § 162.050–27(e)(4) as (e)(5) and inserted a new paragraph (e)(4) that reads: ''If it is necessary to clean the meter after each oil-fouling test for it to return to a zero reading, this fact and the time required to clean and recalibrate the meter must be noted and recorded in the test report.'' Regarding the permeation of heavy oil in the test stand setup, we note this comment, but are adhering to MEPC.108(49) test stand specifications. Observations such as these should be included in the lab report.

Issue 5: One commenter suggested revising § 162.050–20(b)(2) to include a specific dilution ratio or stating that the amount of water added must be accounted for in the volume added under paragraph § 162.050–20(b)(3).

Response: The Coast Guard disagrees with this suggestion. We believe that the overall ratio for fluid C (for the testing of oily water separators and bilge alarms) is dictated by paragraph (a)(3) of § 162.050–20. In paragraph (b)(2), the proposed regulations call for the mixing of the surfactant with water in a ''small container.'' We believe that the amount of water needed to make the surfactant solution is insignificant compared to the amount of water required for paragraph (b)(3). We have amended the regulatory text, however, to clarify that the amount of water that may be used to comply with paragraph (b)(2) must be the minimum required for the creation of a complete surfactant solution.

Issue 6: One commenter stated that a new paragraph should be added near § 162.050–23(a) that bars changing filters, manually cleaning filters, or replacing consumable items during or between the tests.

Response: We agree with the concern expressed by the commenter, but note that the existing 46 CFR 162.050–23(a)(11) prohibits maintenance of the separator during or between the tests. In the interim rule, this paragraph has been redesignated as (a)(10). We made no changes from the proposed rule based on this comment.

Issue 7: One commenter said that the Coast Guard should consider influent concentrations tests of 200 ppm and 1,000 ppm because common separator technologies, such as gravity coalescence, generally have an easier time separating higher concentrations of oil in water.

Response: The Coast Guard disagrees. While gravity coalescence may demonstrate better performance at the stated concentrations, it would be difficult to stipulate optimum concentrations for each method without making the test regime overly prescriptive. Therefore, we made no changes from the proposed rule based on this comment.

Issue 8: One commenter asked if the concentration stated in § 162.050–23(b)(1) should be constant throughout Test 1A or vary between 5,000 and 10,000 ppm. If the concentration should be constant, the commenter recommended setting a specific concentration. If not, then require that the same user-selected concentration also be used in Test 1B.

Response: The recognized lab must select a concentration within a range of 5,000 to 10,000 ppm. The selected concentration must remain consistent throughout the test. We have made a slight revision in the text of § 162.050–23(b)(1) to make this point clearer. The same test run for test fluid B could be at a different concentration within the same range, but again we have decided to leave this selection to the discretion of the test lab.

Issue 9: One commenter stated that calibration and zeroing should be allowed only at the onset of the bilge alarm tests if the manufacturer recommends it.

Response: The Coast Guard agrees. We revised § 162.050–35(b)(3) to remove the calibration and re-zeroing requirement between tests. This requirement should not have been included in the proposed rule.

Issue 10: One commenter said that a new paragraph (a)(4) should be added to § 162.050–35 and read as follows: ''No maintenance, including replacement of parts, may be performed on a bilge alarm during or between the tests described in this section.'' The commenter also added that because this applies to separator approval tests, it should apply to bilge alarms too.

Response: The Coast Guard agrees with the need for a revision, but we have revised a different paragraph. We added a sentence—''No maintenance, including replacement of parts, may be performed on a meter during or between the tests described in this section.''—to § 162.050–27(a)(1). These requirements must be complied with for bilge alarm approval tests under a new § 162.050–35(a)(1).

Issue 11: One commenter suggested adding new steps in the calibration and zero test between paragraphs (b)(2) and (b)(3) in § 162.050–35 to ensure the bilge alarm makes the correct decision of allowing or disallowing overboard discharge. Another commenter recommended adding new steps in the calibration and zero drift test between paragraphs (g)(2) and (g)(3) in § 162.050–35 to ensure the bilge alarm makes the correct decision of allowing or disallowing overboard discharge.

Response: In both cases, the Coast Guard disagrees. Tests for the concentration that triggers the alarm and how long the alarm takes to be triggered are already contained in § 162.050–35(d) (ppm level sample pressure or flow test) and (h) (response time test). The results of these two tests will indicate whether the bilge alarm activates an automatic stopping device when it should and thus stop the discharge overboard of oily mixtures with an oil content exceeding 15 ppm. Therefore, we did not make the requested changes.

Issue 12: One commenter stated that the pass/fail criteria for the test in § 162.050–35(c) is unclear.

Response: The criteria for approval of a bilge alarm for certification are contained in 46 CFR 162.050–7(j) and

include an accuracy standard of 15 ppm ±5 ppm. We made no changes based on this comment.

Issue 13: One commenter recommended testing the bilge alarm at the minimum and maximum design pressure or flow rate instead of one half and at twice the maximum design pressure or flow rate. They stated testing the bilge alarm at twice the maximum design pressure does not provide useful information and may damage the unit.

Response: While the recommendation appears to provide a sound alternative, we have maintained the current language of § 162.050–35(d) because it is consistent with paragraph 2.2.7 of the Annex for MEPC.107(49). Further, this test has been used internationally for several years, and we are not aware of any bilge alarms damaged by this test. We made no changes from the proposed rule based on this comment.

Issue 14: One commenter asked if the purpose of the last phase of Test No. 6A in proposed § 162.050–35(g)(3) was to collect samples of clean water. If not, then the procedure requires clarification.

Response: The purpose of this last phase is not to collect samples of clean water. To provide clarification, we have revised paragraph (g)(3) to better align it with paragraph 2.2.10 of the Annex to MEPC.107(49).

Issue 15: One commenter recommended adding language to start Test No. 7A in § 162.050–35(h) with a 0 ppm injection until the bilge alarm stabilizes and diverts flow ''overboard,'' followed by the 40 ppm injection. Furthermore, the commenter stated if you start at 40 ppm, the actuation point for the alarm may not be observed.

Response: The Coast Guard disagrees. We believe that the requirement in the preceding test in § 162.050–35(g)(3) accomplishes the initial conditions the commenter seeks by adding a 0 ppm injection in § 162.050–35(h) for Test No. 7A and, as specified in § 162.050–35(a), these tests must be performed in sequence. We made no changes from the proposed rule based on this comment.

Issue 16: One commenter said that Test No. 6A in § 162.050–35(g) should be titled ''Calibration and Zero Drift Test'' to distinguish it from Test No. 1A in the same section.

Response: The Coast Guard agrees. We have revised the test name to ''Test No. 6A Calibration and Zero Drift Test.''

Issue 17: One commenter stated that the lab representative conducting the test should verify and state on the test report all parameters of the testing, including the test's start and end time. The report should include verification and documentation that all test fluids were in conformity with those specified and that test fluid C was a ''stable'' emulsion. This should apply to the tests for both the monitoring system and the separator. Any unit submitted without testing all three fluids concurrently should be rejected.

Response: The Coast Guard believes that the information currently required in test reports by 46 CFR 162.050–9 is sufficient for a determination of whether MEPC PPE standards have been met. We also believe that the regulations, as proposed and adopted in this interim rule, are clear that the three test fluids should be tested for both the separator and bilge alarm, in order, and as one continual series of tests, without pause, as far as practicable. We made no changes based on this comment.

Issue 18: One commenter said that the 15 ppm bilge alarm device functions as a key component in the overall performance of the separating equipment. Therefore, these 15 ppm bilge alarm devices should also be included in the separator testing procedure so the accuracy can be measured against the chemical analysis of the clean water discharge.

Response: The Coast Guard disagrees that all bilge alarms should always be tested with separators, however, separators with integral bilge alarms should be tested as one unit. Therefore, we have added new paragraph § 162.050–23(a)(13) stating: ''If a separator has an integral bilge alarm, the separator must be tested with the bilge alarm installed.''

B. Measurement of Oil Content

Commenters raised eight issues regarding the measurement of oil content.

Issue 19: One commenter suggested eliminating § 162.050–39(b) to better conform with IMO resolutions MEPC.107(49) and MEPC.108(49) because the infrared spectrophotometer assay mentioned in that paragraph is not permitted in the current IMO regulations. The commenter also believes the reagent used in the infrared spectrophotometer assay is no longer available in its pure, unused form.

Response: The Coast Guard agrees. We do not believe that any laboratories would benefit from a phasing-out of the test permitted under § 162.050–39(b). Therefore, this paragraph has been removed consistent with our stated goal of eliminating the use of ozone-depleting reagents required by the test in § 162.050–39(b).

Issue 20: One commenter asked if the Coast Guard knows the ''error bar'' for the International Organization for Standardization (ISO) method given the different ways it may be performed. The commenter suggested adding the error bar to the 15 ppm value so as not to preclude a separator whose ''real'' performance is 15 ppm or less. Another commenter stated the Coast Guard should ensure that the replacement hydrocarbon-gas chromatography (GC) method provides results comparable to the freon-infrared spectrophotometer (IR) method, and apply an adjustment factor to the ISO results if warranted.

One commenter said that the MEPC requires the use of ISO 9377–2 to determine oil content of separator and bilge alarm samples. The commenter recommended that the Coast Guard use EPA's Method 1664A as the method of verification. If the ISO method is still the chosen method, the commenter recommended that § 162.050–39 reference the petroleum hydrocarbon extraction method used in 40 CFR part 136 to maintain consistent results.

Response: The Coast Guard does not have an ''error bar'' for the ISO 9377–2 method. We believe that conducting a comparison test of the GC method with the IR method is beyond the scope of this rulemaking. However, we welcome the results of any such comparison. Should verifiable results show an adjustment factor is needed, the Coast Guard would request that the United States bring this to the attention of the IMO for consideration of amendments to MEPC.107(49). We made no changes in response to this comment.

Issue 21: One commenter said the Environmental Protection Agency's (EPA) Method 8015M should be used instead of the ISO 9377–2 method. The commenter stated the EPA method more closely represents the method that should be used, but understands ISO 9377–2 is an international standard and that the use of one nation's method might not be as universally accepted.

Response: At this point, the Coast Guard does not have enough data to ensure the EPA method is equivalent. It is our desire to remain consistent with the IMO resolution. However, if a designated lab or manufacturer desires to use the EPA method in lieu of ISO 9377–2, they must show that it delivers equivalent results. Under 46 CFR 159.001–7, if an alternative method produces equivalent or better performance, we may accept oil-in-water analysis results based on that method. We made no changes from the proposed rule based on this comment.

Issue 22: One commenter recommended that the Coast Guard have discussions with the EPA regarding changes to ISO 9377–2 because 40 CFR part 136 calls for the use of Method 1664A to report oil, grease, and

petroleum hydrocarbons under National Pollution Discharge Elimination Standards (NPDES) permits.

Response: The United States has a responsibility to implement MARPOL Annex I as revised. This includes issuing regulations for approving oil pollution prevention equipment for vessels covered by MARPOL Annex I. In fulfilling this responsibility, the Coast Guard believes maintaining consistency with the IMO resolution is the best approach. Therefore, we made no changes in response to this comment.

Issue 23: One commenter recommended that the Coast Guard use EPA Method 1664 for hardware approval until the implications of using different measurement techniques for hardware approval and enforcement are resolved.

Response: As a Party to MARPOL Annex I, we have an obligation to implement the revised Annex. The Coast Guard believes that maintaining consistency with the IMO resolution is the best way to meet that obligation. We made no changes in response to this comment.

Issue 24: One commenter stated that the NPRM language should facilitate inclusion of alternate methods in the future. The commenter offered to work with the Coast Guard in defining a method that falls within the guidelines of ISO 9377–2, but is more specific.

Response: The Coast Guard currently has the regulatory authority to allow the use of alternative methods that demonstrate equivalent performance characteristics, under 46 CFR 159.007–1 and 159.005–7. Therefore, if a designated lab or manufacturer demonstrates an alternative method with equal or better oil-in-water analysis, then that analysis may be proposed in the lab's application to the Coast Guard for further consideration. We made no changes from the proposed rule in response to this comment.

Issue 25: One commenter asked if § 162.050–7(h)(2) means a 15 ppm separator will fail to receive Coast Guard approval if one or more samples are greater than 15 ppm as measured by ISO 9377–2. The commenter believes that an approved separator should pass the 15 ppm limit test for all conditions including emulsions since an emulsion is a key aspect of the MEPC.107(49) test.

Response: The commenter's interpretation is correct. The only difference from the existing text is that we have eliminated the words ''In the case of a 15 ppm separator'' because this distinction is no longer necessary. We made no changes in response to this comment.

Issue 26: The EPA suggested that we establish a reasonable, but specific date for discontinuation of the IR assay.

Response: As noted above, the Coast Guard removed § 162.050–39(b) from the rule. That paragraph would have permitted the continued use of IR assays, in place of the ISO 9377–2 GC method, so long as reagents for the IR assay remained available. By removing paragraph (b), we eliminated an inconsistency between our proposed rule and the revised MARPOL Annex I.

C. Calibration

Commenters raised 10 issues regarding calibration.

Issue 27: One commenter stated that the NPRM does not include procedures for sealing, breaking, and re-sealing oil content meter seals and recommended identifying procedures and personnel authorized to perform such tasks.

Response: As indicated in proposed 33 CFR 157.12c, a manufacturer's representative should conduct the breaking of meter seals during calibration and repair work. The procedures for routine maintenance and troubleshooting must be clearly defined in the Operating and Maintenance Manual and such work must be recorded. We made no changes in response to this comment.

Issue 28: One commenter stated that there are no valid reasons to restrict access to all basic meter check-and-test features. The commenter said that imposing these limitations would most likely lead to an unacceptable level of equipment operational disruptions in cases where simple testing/adjusting (re-zeroing) would rectify minor problems. The commenter recommended aligning with MEPC.107(49) on this issue.

Response: On December 15, 2005, we corrected the language in proposed 33 CFR 157.12c(e) (see 70 FR 74259), and we have since revised the language in 46 CFR 162.050–33(f) so both better align with the MEPC resolutions. Access for re-zeroing the instrument, checking for instrument drift, and checking the repeatability of the instrument reading will not be limited or require the breaking of a seal. But also consistent with the MEPC resolutions, 33 CFR 157.12c(a) and 46 CFR 162.050–33(f) specify that access beyond these controls would require the braking of a seal of activation of another device which indicates an entry to the equipment.

Issue 29: A commenter found the requirement in paragraph 4.2.5 of MEPC.107(49) that ''[i]t should not be necessary to calibrate the 15 ppm Bilge Alarm on board ship'' confusing and challenging because the calibration requires traceability, recordkeeping, expiration dates, due dates, and the use of calibration standards that effectively demonstrate traceability.

Response: The Coast Guard believes that paragraph 4.2.5 ensures that the reliability of the bilge alarm is tested and requires that the bilge alarm should be installed on the vessel in a calibrated condition. This paragraph also allows for onboard checking of the calibration per the manufacturer's instructions which, in 46 CFR 162.050–5(a)(6), we require to be submitted as part of the manufacturer's application for approval of a bilge alarm. In 46 CFR 162.050–35(b), we specify that the bilge alarm must be calibrated and zeroed using the manufacturer's instructions.

While we have made no changes based on this comment, as noted in our response below to Issue 36, we have added paragraph (d) to 33 CFR 155.380. That paragraph requires a check of the equipment during the International Oil Pollution Prevention (IOPP) certificate surveys. This calibration certificate must be retained onboard. We made no changes based on this comment.

Issue 30: One commenter stated that the Coast Guard should require action if a bilge alarm fails an onboard calibration test.

Response: This rulemaking incorporates the MEPC.107(49) changes relating to equipment design and testing. We feel that changing the current regulation to address equipment performance after installation is outside the scope of this rulemaking. However, we believe that the current IOPP survey regime assures the proper operation of the equipment prior to issuance/endorsement of the certificate. Basically, if an installed bilge alarm fails to calibrate, then the vessel would no longer be in compliance with MARPOL IOPP requirements. We made no changes in response to this comment.

Issue 31: One commenter stated that the regulation should address how drift repeatability and re-zeroing affect calibration.

Response: We believe that the full suite of tests, as prescribed, will give a good indication of the equipment's ability to maintain accuracy. In addition to the readings from the instrument, samples are taken and analyzed. Any variance between the reading and the sample concentration would be noted in the report. We made no changes in response to this comment.

Issue 32: Citing industry norms that calibration intervals never extend beyond 2 years, one commenter said that calibration intervals for bilge alarms should be no more than 2 years.

Response: Currently, under 33 CFR 151.17, the Coast Guard requires that PPE remains in satisfactory condition for the service intended and is checked during the annual IOPP surveys. We made no changes in response to this comment.

Issue 33: One commenter stated that the calibration test for bilge alarms in paragraph 2.2.5 of the Annex to MEPC.107(49), implemented through 46 CFR 162.050–35, should be adjusted so that a highly accurate and traceable input is used or renamed for what it is really doing—determining the stability of the meter and its sensors against varying oil types.

Response: The Coast Guard does not believe that a change is necessary. This test ensures the proper calibration of the bilge alarm using all three test fluids. We do not see a need to alter the name of the test.

Issue 34: One commenter stated that the proposed rule seems to shift the burden of calibration from shipboard operations to the manufacturer. Furthermore, the commenter stated that there should be a recognized standard for calibration because there must be a calibration process used by mariners operating meters and separators.

Response: Resolution MEPC.107(49) does not dictate a specific calibration standard. Furthermore, the Coast Guard believes that the calibration is for the meter only and not the main body of electronics to interpret the signal from the meter. The standard of calibration of the instrument (not the sensor) will be at the discretion of the third party the ship owner uses. We made no changes in response to this comment.

Issue 35: One commenter believes that the following wording in proposed 46 CFR 162.050–33 is unclear and somewhat contradictory to MEPC.107(49): ''calibrating the bilge alarm must not be necessary once installed on board the vessel, however, on board testing in accordance with manufacturer's instruction is permitted.''

Response: The Coast Guard agrees. We have revised this portion of § 162.050–33(d) to read: ''calibrating the bilge alarm must not be necessary once installed onboard the vessel; however, onboard testing in accordance with the manufacturer's operating instructions is permitted for the purposes of checking instrument drift and repeatability of the instrument reading, as well as the ability to re-zero the instrument.''

Issue 36: One commenter said that the same statement, ''calibrating the bilge alarm must not be necessary once installed on board the vessel,'' must be clarified to reflect that calibration may be performed by the manufacturer or qualified personnel at an onshore facility.

Response: The Coast Guard agrees. We have added paragraph (d) to 33 CFR 155.380 to implement the requirements of MEPC.107(49) paragraph 4.2.11. This change will restrict calibration checks to the manufacturer or persons authorized by the manufacturer. It would be up to the manufacturer to prescribe where the calibration check may be conducted.

D. Training

Commenters raised one issue regarding training.

Issue 37: One commenter stated that the Coast Guard (and IMO) must ensure that new separating equipment is thoroughly field tested, standardized, and properly supported by mandatory ''factory'' training for any person expected to use it. Another commenter requested amending the final rule to mandate formal safety and vocational training in equipment operation and maintenance.

Response: The purpose and scope of this rulemaking is to issue PPE design, installation, and testing regulations that implement the revised MARPOL Annex I. The Coast Guard believes this interim rule achieves that goal. For clarification, however, we are adding paragraphs (e) and (f) to 33 CFR 155.380 regarding training and maintenance, respectively.

E. Operating Requirements

Commenters raised seven issues regarding operating requirements.

Issue 38: Regarding proposed 46 CFR 162.050–23(d), one commenter stated that the clean effluent line of the separator should be at least 90 percent of the influent flow rate for purposes of emulsion breaking.

Response: We disagree. This recommendation would require our regulations to be more prescriptive than our performance-based standard from paragraph 1.2.11.1 of the Annex to MEPC.107(49) of feeding a mixture to the separator composed of 6 percent Test Fluid C and 94 percent water by volume such that the emulsified Test Fluid C content is approximately 3,000 ppm in the test water until a steady flow rate occurs. We made no changes based on this comment.

Issue 39: Two commenters suggested adding a new paragraph to address the minimum service life for which bilge alarms should be designed. These commenters also raised material compatibility issues. They stated that the equipment should be suitable for seawater service, and compatible with oil, fuel, and bilge contaminants such as surfactants and particulates.

Response: We do not believe that it is within the scope of this rulemaking to require manufacturers to state the minimum service life of their product. Furthermore, the IMO resolutions do not address service life. As for the material compatibility issues, we believe that these are addressed in the plan review process specified in existing 46 CFR 162.050–5(a)(4), which requires the submittal of arrangement plans and piping diagrams in accordance with the requirements of 46 CFR 56.01–10(d). We made no changes based on these comments.

Issue 40: Responding to proposed 46 CFR 162.050–33, one commenter suggested adding a new paragraph to incorporate fail-safe design requirements for bilge-alarm systems. Specifically, they would require: (1) The bilge alarm to provide a control signal for the ''overboard discharge control device''; (2) at least four consecutive bilge-alarm measurements must be below the alarm set-point before sending the control signal to allow overboard discharge; and (3) when the bilge alarm cannot obtain a reading due to interference or other causes, this must be considered a reading above the alarm set-point as it relates to No. (2).

Response: The Coast Guard disagrees as this suggested change is not in line with the requirements of MEPC.107(49) which are sufficiently designed to stop the discharge overboard of oily-mixtures with an oil content exceeding 15 ppm. We made no changes in response to this comment.

Issue 41: One commenter recommended adding a new paragraph (c)(3) in § 162.050–33 to describe a specific condition that would require the bilge alarm to produce a warning signal and a signal to actuate stop valves when ''the concentration of interferences in the sample (*e.g.*, emulsions, solids, color, air, bulk oil, etc.) may affect the bilge-alarm measurements.'' Additionally, the commenter stated that interferences in the sample may cause erroneous bilge alarm measurements, thus resulting in an inadvertent overboard discharge of oily waste.

Response: While we agree with the commenter's intent, we feel that this situation has been covered by § 162.050–33(c), which calls for stop valves to be activated when the oil content of the mixture measured exceeds 15 ppm or the bilge alarm malfunctions, breaks down, or otherwise fails to operate properly. Further, the proposed and adopted testing scheme includes tests for emulsions and solids. We made no changes in response to this comment.

Issue 42: Regarding 46 CFR 162.050–33(h), one commenter requested a definition of ''operating status.'' Additionally, the commenter wondered if ''operating status'' includes recording if the separator is on/off or in manual/automatic mode. Finally, the commenter also asked about the recording of separator valve positions and alarm conditions.

Response: Resolution MEPC.107(49) does not define operating status, however, a separator would likely have few operating conditions. These would include ''manual'' or ''automatic'' modes, ''off,'' and a cleaning or water-only flush cycle.

The bilge alarm must record when an alarm occurred, i.e., the ''alarm condition,'' with the date and time. While the resolution does not state that the ppm at the time the alarm occurred must be recorded, anything over 15 ppm should be prevented from going overboard. Neither the IMO resolutions nor Coast Guard regulations address the recording of valve positions; however, the option may be provided by manufacturers. We made no changes in response to this comment.

Issue 43: One commenter stated that there should be specifications mandating that the separators operate ''essentially'' unattended even in manned engine rooms.

Response: We agree with the commenter's suggestion and have amended 46 CFR 162.050–21(e) to align with MEPC.107(49) by removing reference to ''unattended machinery space.''

Issue 44: One commenter stated that separators should be required to start in the recirculation mode before entering a filtering phase.

Response: We believe that this change is too divergent from MEPC.107(49). Operationally, we believe that it is the function of the bilge alarm to cause the recirculation of the separator effluent. We do not believe that an additional recirculation stage is necessary. We made no changes in response to this comment.

F. Simulated Shipborne Environment

Commenters raised four issues regarding the simulated shipborne environment.

Issue 45: One commenter asked why the Coast Guard's vibration test specification, which appears in § 162.050–37, is not fully aligned with the IMO specification. The commenter stated that the second 2-hour period of endurance is unlikely to show much more than the first period. The commenter also believed maintaining a different standard than the IMO standard will cause continued confusion among manufacturers.

Response: We agree. We revised paragraphs (b) and (c) of 46 CFR 162.050–37 to align them with identical vibration tests in paragraph 3.2.2.1 of the Annex for MEPC.107(49) and paragraph 2.2.1.1 of the Annex for MEPC.108(49).

Issue 46: We received two comments stating that the proposed standards do not require that a separator be capable of operating while a vessel is underway and subject to vessel pitching, rolling, and vertical and horizontal ''G'' forces.

Response: The equipment is subjected to environmental testing designed to simulate the shipboard environment. Based on the proven abilities of the current approved separators to operate in a dynamic marine environment, we do not propose to require dynamic motion testing while operating the separators for the purposes of certification. We made no changes in response to this comment.

Issue 47: One commenter recommended that we conduct incline experiments for all three test fluids.

Response: The Coast Guard disagrees. We believe that the intent of the environmental testing portions of the IMO resolutions ensures the electrical and electronic sections of the equipment are capable of operating under the test conditions. Therefore, requiring this test to be conducted with all three fluids is excessive and not in line with the intent of the requirements. We made no changes based on this comment.

Issue 48: One commenter said that the Coast Guard should provide a list of fluids to conduct exposure tests.

Response: We disagree. Paragraph (d) of 46 CFR 162.050–21 requires compliance with 46 CFR chapter I, subchapter F—Marine Engineering, as applicable. Also the material specifications of the separator will be considered during plan review. We made no changes in response to this comment.

G. Operating Manual

Commenters raised two issues regarding the operating manual.

Issue 49: One commenter stated that the separator instruction booklet should be carefully written in easily-understood English.

Response: We agree. We have added an express requirement in § 162.050–5(a)(6) that the manual must be easily understood. We also adopted the naming convention of MEPC.107(49) and identified the manual as the ''operating and maintenance manual.''

Issue 50: One commenter stated that the operations manual should provide guidance on failure-logging of separators and guidance on obtaining system improvements.

Response: We disagree. We believe that our revision of requirements for manuals in § 162.050–5(a)(6) is consistent with MEPC.107(49). We made no changes in response to this comment.

H. Applicability

Commenters raised two issues regarding applicability.

Issue 51: One commenter stated that the proposed regulation's applicability should be clearly addressed. Another commenter asked if the current bilge separators approved under MEPC.107(49) will remain ''approved'' after the new rule is adopted. And if that is the case, will there be different categories of approval (e.g., MEPC.107(49), MEPC.60(33), 46 CFR subpart 162.050). Another commenter asked if we intended for the rule changes to take effect upon acceptance of the rule or at a later date.

Response: Most sections of this interim rule will become effective March 17, 2009. The revised MARPOL Annex I became effective internationally January 1, 2007. Paragraph 1.3.1 of resolution MEPC.107(49), which was incorporated into the revised MARPOL Annex I Regulation 14, makes the resolution applicable to ships built on or after January 1, 2005, and to ships that install new PPE on or after January 1, 2005. This aspect of the revised Annex I was not reflected in our proposed rule. To implement these incorporated requirements, we have added three paragraphs—33 CFR 155.350(a)(3), 155.360(a)(2), and 155.370(a)(4)—to the interim rule requiring vessels built on or after January 1, 2005, and vessels that install new PPE on or after January 1, 2005, to meet the new PPE requirements. We are delaying the effective date of those paragraphs, so that we may seek your comments on them before making them effective. Based on your comments, we may revise these paragraphs before making them effective in a final rule.

Since publishing a notice of policy in December 2003 acknowledging the new MARPOL guidelines (68 FR 75603, December 31, 2003), we have approved some systems from PPE manufacturers who, in anticipation of the new MARPOL guidelines, sought Coast Guard approval under testing standards other than those in the current 46 CFR subpart 162.050. As the 2003 notice stated, the Coast Guard may, in its discretion, determine whether alternative standards ensured equivalent performance characteristics.

Systems approved under MEPC.60(33) that were installed before January 1, 2005, on vessels built before January 1, 2005, and are still in good working order will not be affected by this rule. Systems approved before the effective date of this rule using resolution MEPC.107(49) guidelines will remain approved. For any systems approved to a standard other than MEPC.107(49) after January 1, 2005, but before March 17, 2009, the approval will expire March 17, 2009.

Issue 52: One commenter stated that, if adopted, the new rules would apply to U.S.-flag ships only and recommended developing a requirement for identification of equipment built, tested, and certified for U.S.-flag vessels or alternatively adopt IMO standards in its entirety.

Response: We disagree. Current regulations in 33 CFR 155.380 stipulate compliance with 46 CFR 162.050 requirements for all U.S.-flag inspected vessels. Uninspected U.S.-flag vessels and foreign-flag vessels may either comply with 46 CFR 162.050 or MARPOL Annex I. (See discussion of § 155.380(b) in the *Changes from Proposed Rule* section below.) The identification of equipment built, tested, and certified for U.S.-flag vessels, is currently required by 46 CFR 162.050–11, Marking. We have not changed these current requirements.

I. PPE Alternatives

Commenters raised one issue regarding PPE alternatives.

Issue 53: One commenter requested that the Coast Guard consider properly designed and engineered holding tanks as a regulatory alternative to installing separator equipment that is unreliable and difficult to maintain on small vessels manned by lower-level mariners.

Response: This rulemaking implements PPE design and performance guidelines and standards in MEPC.107(49) and MEPC.108(49), and does not change which vessels must have PPE. Subpart B of 33 CFR part 155 and Regulation 16 of MARPOL Annex I dictate that ships of 400 gross tons or more must be fitted with PPE.

Our regulations require holding tanks on oceangoing ships over 400 gross tons in certain situations (see 33 CFR 155.360(b) and (c), and 33 CFR 155.370(b) and (c)), in addition to requiring the installation of approved PPE. We made no changes from the proposed rule based on this comment.

J. Data Recording

Commenters raised three issues regarding data recording.

Issue 54: One commenter asked if a vessel's speed and position-data requirement include the bilge alarm as well as the oil-discharge monitoring system.

Response: Neither the MEPC resolutions nor our proposed rules contain a requirement for bilge alarms to record the vessel speed and position. We made no changes in response to this comment.

Issue 55: One commenter stated that the proposed rule does not prevent overriding data inputs for failed equipment.

Response: This rule may only discourage, not prevent, overriding data inputs. However, those who tamper with the system will leave evidence in the form of broken seals on the bilge alarm. We made no changes based on this comment.

Issue 56: One commenter stated that a recording interval for bilge alarms is not specified in § 162.050–33(h). The commenter also wanted to know if our intent for bilge-alarm recording intervals is the same as in § 157.12d(h)(3) for oil content meters.

Response: Where the meter has a stated 10-minute interval, there is no required interval for the bilge alarm to print, display, or save a particular piece of information. The bilge alarm is merely required to save alarm events and operational status with a date and time stamp. The recorded information aids regulatory agencies in correlating separator-related entries in the oil record book. We made no changes from the proposed rule in response to this comment.

K. Test Rig

Commenters raised four issues regarding test rigs.

Issue 57: One commenter stated that the 30° chisel-edged chamfer in figure 162.050–17(d), Sample Point, should be around the outside perimeter instead of the inside perimeter of the sampler inlet to minimize disturbance of the sampling flow and to be consistent with MEPC.107(49).

Response: We agree and have corrected the chamfer illustrated in Figure 162.050–17(d).

Issue 58: One commenter recommended requiring the use of a syringe pump with a screw-type driver in place of the buret for oil injection at low concentrations to avoid pulsations of oil injections.

Response: The Coast Guard disagrees. Our figure at 46 CFR 162.050–19 and MEPC.107(49) figure 5 stipulate ''burets and metering pumps for injecting known oil ppm's and high oil transients,'' and thus provide discretion to the testing lab to deliver the oil in the manner of its choosing. During the review of a facility's application under 46 CFR 162.050–15, we examine information on the facility's test rigs. Any deviation from the required test rigs must be noted in this information. We have no evidence of buret injections creating pulsations of oil injections at low concentrations. We made no changes in response to this comment.

Issue 59: One commenter recommended including the use of an inline disperser as an alternative to the high-shear pump to vary the oil droplets size distribution.

Response: The designated testing lab may propose alternative testing methods to the Marine Safety Center before beginning the tests. If agreed upon, any deviation from the required test rig must be noted in the test report or application. We made no changes from the proposed rule based on this comment.

Issue 60: One commenter suggested including the specifications of the tank used for Test Fluid C per Figure 3 and notes 1 through 3 of paragraph 1.2.4 of Part I of the Annex to MEPC.107(49) as it would ensure consistent mixing of Test Fluid C by different test facilities.

Response: The Coast Guard agrees. Our proposed paragraph (b)(2) of 46 CFR 162.050–20 references a worksheet, figure 162.050–20, for determining Constituents of Test Fluid C. In response to this commenter's suggestion, we are adding MEPC's Figure 3 to that worksheet, and have inserted the notes as text in that worksheet.

L. Response Time

Commenters raised one issue regarding response time.

Issue 61: One commenter stated that the measuring time in proposed 46 CFR 162.050–33(e) should be changed from 5 seconds to 15 seconds. The commenter also said the proposed 5 seconds would exclude, from future installations, bilge alarms that are already in service and have been proven to provide fail-safe performance.

Response: The Coast Guard disagrees. The purpose of this regulatory change is to increase the performance standards of the equipment. The changes will not require existing equipment MEPC.60(33) to be retrofitted at this time. Previously installed bilge alarms that were approved under the MEPC.60(33) requirements and are in good working order will not have to meet the 5-second response time. However, future installations of these MEPC.60(33)-approved bilge alarms will not be permitted. This is in line with the

requirements of MEPC.107(49). We made no changes in response to this comment.

M. Test Fluid

Commenters raised four issues regarding test fluid.

Issue 62: One commenter stated that separators should be tested with salt-water-mixed test fluids.

Response: Both 46 CFR 162.050–23 (a)(4), and the IMO resolution, paragraph 1.2.7 of Part 1 of the Annex to MEPC.107(49), allow the use of salt water, provided the density of the water used in the tests is no greater than 1.015 at 20° Celsius. We have decided not to mandate testing with salt water as this could materially affect the costs of certification. We made no changes in response to this comment.

Issue 63: One commenter said that turbidity from sources other than oils—including rust and dirt—may fool the bilge alarm into thinking it is seeing oil and, because of this, operators are burdened with removing these other turbidity sources from exposure to the bilge alarm to permit pumping anything over the side.

Response: To ensure alignment with the international requirements, the Coast Guard will require the same three test fluids stipulated in paragraph 1.2.4 of Part 1 of the Annex to MEPC.107(49). Further, we believe that the inclusion of Test Fluid C will account for the equipment's ability to handle particulate matter (including rust) as well as emulsions. We made no changes in response to this comment.

Issue 64: One commenter stated that it is impossible to duplicate emulsion fluid tests in actual sea service. The commenter believes a minimum 6-month trial run in actual service could be part of the rule requirement to obtain equipment certification.

Response: The Coast Guard does not intend to implement a 6-month testing regime for the purpose of certifying PPE. Such testing would be inconsistent with the requirements of MEPC.107(49). Furthermore, Test Fluid C was developed following thorough discussion at IMO and provides a good representation of common bilge water. We made no changes in response to this comment.

Issue 65: One commenter believes that soot in ''reasonable representative quantities'' should be a component in test fluids, both in the Coast Guard's proposed fluids and MEPC.107(49) fluids.

Response: The Coast Guard disagrees. The constituents of Test Fluid C were developed based on the input of numerous IMO delegations through discussions over several years. This is believed to be an accurate facsimile of the fluid that may be encountered on a large percentage of the vessels currently in operation. The IMO has received several similar comments and has maintained the same stance regarding changes to it. The Coast Guard concurs with this stance and will maintain the Test Fluid C constituents as they are set out by MEPC.107(49) paragraph 1.2.4. We made no changes in response to this comment.

N. Incorporating MEPC.107(49) by Reference

Commenters raised one issue regarding incorporation by reference.

Issue 66: One commenter believes that incorporating or referencing MEPC.107(49) in the proposed rule will lead to an accurate and thorough understanding of the requirements.

Response: The Coast Guard disagrees because, as discussed in the preamble of the NPRM (70 FR 67067, November 3, 2005), we believe that there are elements of MEPC.107(49) that need clarification. The comments on our proposed rule provide evidence that some aspects of the resolutions require further clarification. We made no changes from the proposed rule based on this comment.

O. Test Report

Commenters raised one issue regarding test reports.

Issue 67: One commenter said that verification of the stability of the Test Fluid C emulsion and other testing parameters must be shown in the test report with documentation to prove conformity.

Response: We believe that a stable emulsion will be established if a lab follows the Test Fluid C preparation requirements under 46 CFR 162.050–20. In response to this comment, we have added a requirement in 46 CFR 162.050–9(a)(6), to provide verification that the lab followed the testing procedures prescribed in 46 CFR subpart 162.050.

P. Cleaning Detergent in Engine Room

Commenters raised two issues regarding cleaning detergent in the engine room.

Issue 68: One commenter believes that any equipment (separators or bilge alarms) should be certified with qualification about what type of cleaners can be used aboard vessels with that product or any inability of that product to handle emulsions. The proposed rule clearly implies that they could not meet MEPC.107(49) testing protocols. Information about system performance enhancements such as preferred cleaners, etc., belong in their operating manuals, not on their certificates. These qualifications should be removed from the actual certificates and the product's actual certification/testing procedures should be re-verified.

Response: Detergents are generally known to cause emulsions, and the IMO resolutions and corresponding Coast Guard implementing regulations have added an emulsified test fluid to challenge the equipment. However, the Coast Guard does not plan to add this type of information to the approval certificate because unlike older technology represented in the previous standard, MEPC.60(33), under MEPC.107(49) standards, PPE are expected to handle the range of fluids and emulsions that are founds in bilges today. Therefore, we are not making a change from the proposed rule based on this comment.

Issue 69: One commenter stated that separators should be required to be insensitive to a host of United States Department of Agriculture (USDA) approved detergents that may be used anywhere in the engine room on a vessel.

Response: With the possibility of emulsified bilge water always present the bilge separator must be capable of separating the oil from the emulsion to produce an effluent with an oil content not exceeding 15 ppm even when detergents are present in the bilge. The bilge separator should therefore be tolerant of a wide range of detergents, but at the same time, as noted in paragraph 1.1.3 of the introduction to the MEPC.107(49) Annex, proper measures should be taken to minimize the presence of cleaning agents in the bilge. As noted above in response to issue 63 regarding turbidity, to ensure alignment with the international requirements, the Coast Guard will require the same three test fluids stipulated in MEPC.107(49). We believe that the inclusion of Test Fluid C will account for the equipment's ability to handle emulsions caused by detergents. We made no changes from the proposed rule based on this comment.

Q. PPE Design

Commenters raised one issue regarding PPE design.

Issue 70: One commenter stated ''the absolute absence of any type of standardization of OWS [oily water separator] systems makes the initial investigation confusing, dirty, time consuming and sometimes plain incorrect.''

Response: The Coast Guard disagrees. The IMO resolutions and the

corresponding Coast Guard regulations are primarily performance-based in determining the design of a separator. The commenter's suggestion would require prescriptive regulations and could further limit the production of innovative technologies and improvements in the field of separation technology. We made no changes based on this comment.

R. Oil Categories

Commenters raised one issue regarding oil categories.

Issue 71: One commenter suggested that the Coast Guard use its current category of oils based on American Petroleum Institute (API) gravity values and require the laboratory conducting the testing of the oil discharge monitoring equipment (monitoring system) report the values of the crude oils used as described in the Parameters Tolerance column of the Crude Oils table in paragraph 1.2.6 of Part 1 of the Annex to MEPC.108(49). The commenter stated this is in line with the intent of MEPC.108(49) and the Coast Guard's regulation allowing for the onboard calibration of the ODME for the type of crude oil or petroleum product being transported. As an alternative, the commenter requested the Coast Guard provide Standard Reference Material (SRM) crude oil and petroleum product samples to the company for testing purposes or information on where the company can obtain the samples.

Response: We believe that Table 162.050–27(c)—Oil Type and Characteristics in the proposed 46 CFR 162.050–27 accomplishes the goal of this request. Also, 46 CFR 162.050–27(c)(3) allows for the substitution of an oil with similar properties to those listed in table 162.050–27(c). Further, the testing laboratory is required to report the properties of the test oils under 46 CFR 162.050–9(a)(5). We made no changes in response to this comment.

S. Beyond the Scope of This Rulemaking

Commenters raised two issues beyond the scope of this rulemaking.

Issue 72: We received two comments regarding Oil Record Books (ORBs). Of those, one commenter requested that we amend the final rule to mandate training in the proper method of entering entries into the ORB for anyone expected to operate separators. The other comment stated the ORBs are not readily available.

Response: We believe that these requests regarding oil record books are beyond the scope of this rulemaking. This rulemaking seeks to implement the MEPC PPE guidelines and standards being incorporated into MARPOL Annex I. Oil record books are not referenced in either MEPC.107(49) or MEPC.108(49).

We have forwarded the comment regarding the availability of ORBs to the appropriate office for their consideration. We made no changes to this comment.

Issue 73: We received two comments from the same commenter regarding operating requirements. The commenter stated that it should be a requirement to have onboard a complete set of recommended repair parts for separators. The commenter also said that a complete set (100 percent of installed working elements) of filters, coalescers, filter media, membranes, etc., should be required for separators to assure continued operation in the event of severe fouling.

Response: We feel that this suggestion to require a complete set of repair parts is beyond the scope of the rulemaking. The application for certification, 46 CFR 162.050–5, already requires submission of detailed instructions on maintenance of the unit to be certified. Repair parts are typically only stipulated for certain systems on board that materially affect the safe handling or navigation of the vessel. We made no changes in response to this comment.

T. Changes From Proposed Rule

In 33 CFR part 155, Oil or Hazardous Material Pollution Prevention Regulations for Vessels, we have made the following changes from the proposed rule. As noted in our response to Issue 51, to reflect the requirements of MEPC.107(49) that has been incorporated into MARPOL Annex 1 effective January 1, 2007, we have invited comments on our changes to three paragraphs in §§ 155.350, 155.360, and 155.370, and have delayed the implementation of those three paragraphs pending our review of comments. As discussed in Issues 36 and 37, we also revised § 155.380, and added paragraphs (d), (e) and (f) to that section. Also, we removed references to ''bilge monitor'' in the section heading and paragraphs (a) and (b) of § 155.380.

In reviewing part 155, we discovered that the IMO Marine Environmental Protection Committee Circular summary of MARPOL 73/78-approved equipment referenced in 33 CFR 155.380(b) no longer exists, so we have changed this reference to include any equipment approved under MARPOL Annex I. Approval of OWS equipment and bilge alarms under MARPOL Annex I is offered as an alternative for U.S. uninspected ships and foreign ships to approval under 46 CFR 162.050. We believe that this revision will adequately reflect the same level of equipment approval as the previous requirement. Also, we revised the authority citation for the part by relocating the reference to 46 U.S.C. 3703.

In 33 CFR part 157, Rules for the Protection of the Marine Environment Relating to Tank Vessels Carrying Oil in Bulk, we have revised the format of the incorporation by reference section, § 157.02, so that the material approved for incorporation by reference may be more easily associated with the section(s) incorporating this material. As indicated in our response to Issue 1, in part 157 we have removed the term ''cargo monitor'' to identify the ''monitoring system.'' As noted in Issue 28, we have revised § 157.12c(e). Finally for part 157, in paragraphs (b) and (c) of § 157.12f, we deleted the unnecessary words ''at least all'' when describing the operations that must be included in a functional test on an oil content meter and a control section of a monitoring system.

In 46 CFR part 162, Engineering Equipment, we made many revisions. We revised the format of the incorporation by reference section, § 162.050–4, so that the incorporated-by-reference-approved material may be more easily associated with the section(s) incorporating this material. Also in that section, we discovered that the International Standards Organization (ISO) 8217 standard incorporated in 46 CFR 162.050–20(a) was revised in 2005. Therefore, we have revised the reference to this ISO standard in § 162.050–4(c)(1). This ISO revision changed the ''type'' description for the marine residual fuel oil required by § 162.050–20(a)(1). This change is due to ISO's reduction of the temperature at which the viscosity is measured. At the original test temperature of 100° Celsius, this fuel oil had a viscosity of 35 (hence the original name: RMG 35). At the new test temperature of 50° Celsius, this same fuel oil has a viscosity of 380 (hence the new name: RMG 380). The updated ISO 8217 does not affect the ''type'' description for the marine distillate fuel oil referred to in § 162.050–20(a)(2).

As discussed in our response to Issue 1, we replaced the term ''cargo monitor'' in part 162 with the term ''oil content meter.'' The following table reflects other changes to part 162 made in response to comments.

For reasons stated in our response to Issue number . . .	. . . we revised the following section:
49	162.050–5(a)(6)

For reasons stated in our response to Issue number . . .	. . . we revised the following section:
67	162.050–9(a)(6)
57	162.050–17(d)
60	162.050–20
5	162.050–20(b)(3)
43	162.050–21(e)
18	162.050–23(a)(13)
8	162.050–23(b)(1)
3	162.050–27(b) and (c)
10	162.050–27(a)(1)
4	162.050–27(e)(4)
28	162.050–33(f)
35	162.050–33(d)
9	162.050–35(b)(3)
14	162.050–35(g)(3)
16	162.050–35(g)
45	162.050–37(b) and (c)
19 and 26	162.050–39(b) [removed]

Discussion of Interim Rule

We are amending our oil pollution prevention equipment regulations to make them consistent with new IMO guidelines and specifications in resolutions MEPC.107(49) and MEPC.108(49), which are incorporated into MARPOL Annex I regulations 14 (Oil filtering equipment), 18 (Segregated Ballast Tanks), and 31 (Oil discharge monitoring and control system). These revisions will implement Annex I regulations and should reduce the amount of oil discharged from vessels, and eliminate the use of ozone-depleting solvents in equipment tests.

This interim rule will require all vessels replacing or installing oil separators and bilge alarms to install equipment that meets revised standards and it will require newly-constructed vessels carrying oil in bulk to install monitoring systems that meet revised standards. Tests for approval of this equipment have been revised to deal with common bilge contaminants and eliminate the use of ozone-depleting solvents.

We have delayed the implementation of three paragraphs involving equipment installed on or after January 1, 2005. As discussed in our response to Issue 51, paragraph 1.3.1 of resolution MEPC.107(49) was incorporated into MARPOL Annex I on January 1, 2007, and makes the resolution applicable to ships built on or after January 1, 2005, and to ships that install PPE on or after January 1, 2005. This aspect of the revised Annex I was not reflected in our proposed rule.

To implement these incorporated requirements, we have added three paragraphs—33 CFR 155.350(a)(3), 155.360(a)(2), and 155.370(a)(4)—to the interim rule that require vessels built or PPE installed on or after January 1, 2005, to meet the new PPE requirements. As noted above, we seek your comments on these three paragraphs which we have delayed implementing until October 13, 2009, of the interim rule. Based on your comments, we may revise these paragraphs before issuing a final rule.

Since publishing a notice of policy in December 2003 acknowledging the new MARPOL guidelines (68 FR 75603, December 31, 2003), we have approved some systems from PPE manufacturers who, in anticipation of the new MARPOL guidelines, sought Coast Guard approval under testing standards other than those in the current 46 CFR subpart 162.050. As that 2003 notice stated, the Coast Guard may, in its discretion, determine whether alternative standards ensured equivalent performance characteristics.

Systems approved under MEPC.60(33) that are installed on vessels built before January 1, 2005, and are still in good working order will not be affected by this rule. Systems approved before the effective date of this rule using MEPC.107(49) guidelines as the alternative will remain approved. For any system approved after January 1, 2005, using an alternative other than MEPC.107(49), the approval will expire March 17, 2009.

As noted in response to Issue 1, we made some nomenclature changes to better align our terms with those in MEPC.108(49) and in our current pollution certificate requirements. Related to this nomenclature change, we have added paragraph 33 CFR 157.12d(a)(4)(viii)(G) to ensure the control section of the monitoring system is tested in accordance with the vibration testing requirements described in 46 CFR 162.050–37. And we also added paragraph 33 CFR 157.12d(a)(7) to ensure each main component of the monitoring system is designed in accordance with the applicable requirements contained in subchapters F and J.

Compliance with the requirements of this interim rule does not relieve vessel owners and operators of meeting requirements of other applicable laws such as the Federal Water Pollution Control Act, 33 U.S.C. 1251–1387 (also known as the Clean Water Act) or related regulations. This would include compliance with any National Pollutant Discharge Elimination System (NPDES) Vessel General Permit regulations that may be promulgated by the Environmental Protection Agency in response to a court order to vacate an EPA regulation, 40 CFR 122.3(a), which identifies discharges—including most incidental to the normal operation of a vessel—that do not require NPDES permits. See EPA NPDES General Permits for Discharges Incidental to the Normal Operation of a Vessel notices published June 17, 2008 (73 FR 34296) and December 29, 2008 (73 FR 79473).

VI. Incorporation by Reference

The Director of the Federal Register has approved the material in 33 CFR 157.02 and 46 CFR 162.050–4 for incorporation by reference under 5 U.S.C. 552 and 1 CFR part 51. You may inspect this material at U.S. Coast Guard Headquarters where indicated under **ADDRESSES**. Copies of the material are available from the sources listed in 33 CFR 157.02 and 46 CFR 162.050–4.

VII. Regulatory Analyses

We developed this interim rule after considering numerous statutes and executive orders related to rulemaking. Below we summarize our analyses based on 13 of these statutes or executive orders.

A. Regulatory Planning and Review

Executive Order 12866, ''Regulatory Planning and Review,'' 58 FR 51735, October 4, 1993, requires a determination whether a regulatory action is ''significant'' and therefore subject to review by the Office of Management and Budget (OMB) and subject to the requirements of the Executive Order. This rulemaking is not significant under Executive Order 12866 and OMB has not reviewed it.

Public comments on the NPRM are summarized in Part IV of this preamble. We received no public comments and have made no changes that would alter our assessment of impacts in the NPRM. We have found no additional data or information that would change our findings in the NPRM. We have adopted the assessment in the NPRM for this interim rule. See the ''Regulatory Evaluation'' of the NPRM for the complete analysis. A summary of the assessment follows.

We estimated 176 existing vessels and 46 new vessels annually will be affected by this rule and incur additional costs for installing OWS and bilge alarms.

We estimated the annual costs of the OWS and bilge alarms combined range from $9,000 to $19,000, depending on vessel type and size for both existing and new vessels. We estimated non-discounted annual costs for existing vessels at approximately $2.3 million and approximately $550,000 for new vessels, or about $2.9 million combined. We estimated the total 10-year present value cost of the rule to be $21 million or $25 million based on a seven or three

percent discount rate (all values rounded).

The benefits of this rule are improved environmental conditions from the use of PPE, which meets higher standards of pollution prevention. The new OWS equipment will better handle the separation of emulsified oils, surfactants, and contaminants from water. There is also a broader range and volume of pollutants that will no longer be released into the environment because of these new standards. See the ''Regulatory Evaluation'' section of the NPRM for additional details.

B. Small Entities

Under the Regulatory Flexibility Act (5 U.S.C. 601–612), we have considered whether this rule has a significant economic impact on a substantial number of small entities. The term ''small entities'' comprises small businesses, not-for-profit organizations that are independently owned and operated and are not dominant in their fields, and governmental jurisdictions with populations of less than 50,000.

In the NPRM, we certified under 5 U.S.C. 605(b) that the proposed rule would not have a significant economic impact on a substantial number of small entities. We have found no additional data or information that would change our findings in the NPRM. We have adopted the certification in the NPRM for this interim rule. See the ''Small Entity'' section of the NPRM for the complete threshold analysis.

Therefore, the Coast Guard certifies, under 5 U.S.C. 605(b), that this interim rule does not have a significant economic impact on a substantial number of small entities. If you think that your business, organization, or governmental jurisdiction qualifies as a small entity and that this interim rule will have a significant economic impact on it, please submit a comment to the Docket Management Facility at the address under **ADDRESSES**. In your comment, explain why you think it qualifies and how and to what degree this rule would economically affect it.

C. Assistance for Small Entities

Under section 213(a) of the Small Business Regulatory Enforcement Fairness Act of 1996 (Pub. L. 104–121), we want to assist small entities in understanding this rule so that they can better evaluate its effects on them and participate in the rulemaking. If the rule affects your small business, organization, or governmental jurisdiction and you have questions concerning its provisions or options for compliance, please consult Mr. Wayne Lundy, Office of Systems Engineering (CG–5213), Coast Guard, telephone 202–372–1379. The Coast Guard will not retaliate against small entities that question or complain about this rule or any policy or action of the Coast Guard.

D. Collection of Information

This rule calls for no new collection of information under the Paperwork Reduction Act of 1995 (44 U.S.C. 3501–3520). The paperwork burden associated with the manufacture, laboratory testing, approval tests, and marking of pollution prevention equipment is addressed in the existing collection of information, OMB #1625–0035, entitled ''Title 46 CFR Subchapter Q: Lifesaving, Electrical and Engineering Equipment; Construction and Materials.'' The Office of Management and Budget approved this collection of information on March 17, 2006. It will expire after the 3-year approval period ends on March 31, 2009.

E. Federalism

A rule has implications for federalism under Executive Order 13132, Federalism, if it has a substantial direct effect on State or local governments and would either preempt State law or impose a substantial direct cost of compliance on them.

It is well settled that States may not regulate in categories reserved for regulation by the Coast Guard. It is also well settled, now, that all of the categories covered in 46 U.S.C. 3306, 3703, 7101, and 8101 (design, construction, alteration, repair, maintenance, operation, equipping, personnel qualification, and manning of vessels), as well as the reporting of casualties and any other category in which Congress intended the Coast Guard to be the sole source of a vessel's obligations, are within the field foreclosed from regulation by the States. (See the decision of the Supreme Court in the consolidated cases of *United States* v. *Locke* and *Intertanko* v. *Locke*, 529 U.S. 89, 120 S.Ct. 1135 (March 6, 2000).)

The pollution prevention equipment regulations promulgated in this rule are within the field foreclosed from regulation by the States, and therefore preemption under E.O. 13132 is not an issue.

F. Unfunded Mandates Reform Act

The Unfunded Mandates Reform Act of 1995 (2 U.S.C. 1531–1538) requires Federal agencies to assess the effects of their discretionary regulatory actions. In particular, the Act addresses actions that may result in the expenditure by a State, local, or tribal government, in the aggregate, or by the private sector of $100,000,000 or more in any one year. Though this rule will not result in such an expenditure, we do discuss the effects of this rule elsewhere in this preamble.

G. Taking of Private Property

This rule will not effect a taking of private property or otherwise have taking implications under Executive Order 12630, Governmental Actions and Interference with Constitutionally Protected Property Rights.

H. Civil Justice Reform

This rule meets applicable standards in sections 3(a) and 3(b)(2) of Executive Order 12988, Civil Justice Reform, to minimize litigation, eliminate ambiguity, and reduce burden.

I. Protection of Children

We have analyzed this rule under Executive Order 13045, Protection of Children from Environmental Health Risks and Safety Risks. This rule is not an economically significant rule and does not create an environmental risk to health or risk to safety that may disproportionately affect children.

J. Indian Tribal Governments

This rule does not have tribal implications under Executive Order 13175, Consultation and Coordination with Indian Tribal Governments, because it does not have a substantial direct effect on one or more Indian tribes, on the relationship between the Federal Government and Indian tribes, or on the distribution of power and responsibilities between the Federal Government and Indian tribes.

K. Energy Effects

We have analyzed this rule under Executive Order 13211, Actions Concerning Regulations That Significantly Affect Energy Supply, Distribution, or Use. We have determined that it is not a ''significant energy action'' under that order because it is not a ''significant regulatory action'' under Executive Order 12866 and is not likely to have a significant adverse effect on the supply, distribution, or use of energy. The Administrator of the Office of Information and Regulatory Affairs has not designated it as a significant energy action. Therefore, it does not require a Statement of Energy Effects under Executive Order 13211.

L. Technical Standards

The National Technology Transfer and Advancement Act (NTTAA) (15 U.S.C. 272 note) directs agencies to use voluntary consensus standards in their regulatory activities unless the agency

provides Congress, through the Office of Management and Budget, with an explanation of why using these standards would be inconsistent with applicable law or otherwise impractical. Voluntary consensus standards are technical standards (e.g., specifications of materials, performance, design, or operation; test methods; sampling procedures; and related management systems practices) that are developed or adopted by voluntary consensus standards bodies.

This interim rule uses the following consensus standards that are not voluntary standards:

- IMO Assembly Resolution A.393(X)—Recommendation on International Performance and Test Specifications For Oily-Water Separating Equipment and Oil Content Meters;
- IMO Assembly Resolution A.496(XII)—Guidelines and
- Specifications for Oil Discharge Monitoring and Control Systems for Oil Tankers;
- IMO Assembly Resolution A.586(14)—Revised Guidelines and Specifications for Oil Discharge Monitoring and Control Systems for Oil Tankers;
- IMO Marine Environment Protection Committee Resolution MEPC.13(19)—Guidelines for Plan Approval and Installation Survey of Oil Discharge Monitoring and Control Systems for Oil Tankers and Environmental Testing of Control Sections Thereof;
- IMO Marine Environment Protection Committee Resolution MEPC.108(49)—Revised Guidelines and Specifications for Oil Discharge Monitoring and Control Systems for Oil Tankers.
- International Organization for Standardization Standard ISO 8217 (2005) Petroleum products—Fuels (class F)—Specification of marine fuels;
- International Organization for Standardization Standard ISO 9377–2 (2000), Water Quality—Determination of hydrocarbon oil index—Part 2: Method Using solvent extraction and Gas Chromatography.

They are used because the United States is party to MARPOL Annex I and we must use these standards to effectively implement MARPOL Annex I regulations. The sections that reference these standards and the locations where these standards are available are listed in 33 CFR 157.02 and 46 CFR 162.050–4.

M. Environment

We have analyzed this rule under Department of Homeland Security Management Directive 5100.1 and Commandant Instruction M16475.lD, which guide the Coast Guard in complying with the National Environmental Policy Act of 1969 (NEPA) (42 U.S.C. 4321–4370f), and have concluded under the Instruction that there are no factors in this case that would limit the use of a categorical exclusion under section 2.B.2 of the Instruction. Therefore, this rule is categorically excluded, under figure 2–1, paragraph (34)(d), of the Instruction and under section 6(b) of the ''Appendix to National Environmental Policy Act: Coast Guard Procedures for Categorical Exclusions, Notice of Final Agency Policy,'' (67 FR 48243, July 23, 2002), from further environmental documentation. This regulation fits within these categorical exclusions because it concerns equipment approval and carriage requirements and implements regulations designed to protect the environment. An environmental analysis checklist and a categorical exclusion determination are available in the docket where indicated under **ADDRESSES**.

List of Subjects

33 CFR Part 155

Alaska, Hazardous substances, Oil pollution, Reporting and recordkeeping requirements.

33 CFR Part 157

Cargo vessels, Incorporation by reference, Oil pollution, Reporting and recordkeeping requirements.

46 CFR Part 162

Fire prevention, Incorporation by reference, Marine safety, Oil pollution, Reporting and recordkeeping requirements.

■ For the reasons discussed in the preamble, the Coast Guard amends 33 CFR parts 155 and 157 and 46 CFR part 162 as follows:

Title 33—Navigation and Navigable Waters

PART 155—OIL OR HAZARDOUS MATERIAL POLLUTION PREVENTION REGULATIONS FOR VESSELS

■ 1. Revise the authority citation for part 155 to read as follows:

Authority: 33 U.S.C. 1231, 1321(j); 46 U.S.C. 3703; E.O. 12777, 56 FR 54757, 3 CFR, 1991 Comp., p. 351; Department of Homeland Security Delegation No. 0170.1. Sections 155.100 through 155.130, 150.350 through 155.400, 155.430, 155.440, 155.470, 155.1030(j) and (k), and 155.1065(g) are also issued under 33 U.S.C. 1903(b). Section 155.490 also issued under section 4110(b) of Pub. L. 101–380. Sections 155.1110 through 155.1150 also issued under 33 U.S.C. 2735.

Note: Additional requirements for vessels carrying oil or hazardous materials are contained in 46 CFR parts 30 through 40, 150, 151, and 153.

■ 2. In § 155.350, revise the section heading and add paragraph (a)(3) to read as follows:

§ 155.350 Oily mixture (bilge slops)/fuel oil tank ballast water discharges on oceangoing ships of less than 400 gross tons.

(a) * * *

(3) For equipment installed after 2004 to be approved under paragraph (a)(2) of this section, it must meet current standards in 46 CFR part 162, subpart 162.050, unless the equipment is installed on a ship constructed before 2005 and it would be unreasonable or impracticable to meet those current standards.

* * * * *

■ 3. In § 155.360, revise the section heading, redesignate paragraph (a) as (a)(1) and add paragraph (a)(2) to read as follows:

§ 155.360 Oily mixture (bilge slops) discharges on oceangoing ships of 400 gross tons and above but less than 10,000 gross tons, excluding ships that carry ballast water in their fuel oil tanks.

(a)(1) * * *

(2) For equipment installed after 2004 to be approved under paragraph (a)(1) of this section, it must meet current standards in 46 CFR part 162, subpart 162.050, unless the equipment is installed on a ship constructed before 2005 and it would be unreasonable or impracticable to meet those current standards.

* * * * *

■ 4. In § 155.370, add paragraph (a)(4) to read as follows:

§ 155.370 Oily mixture (bilge slops)/fuel oil tank ballast water discharges on oceangoing ships of 10,000 gross tons and above and oceangoing ships of 400 gross tons and above that carry ballast water in their fuel oil tanks.

(a) * * *

(4) For equipment installed after 2004 to be approved under paragraph (a) of this section, it must meet current standards in 46 CFR part 162, subpart 162.050, unless the equipment is installed on a ship constructed before 2005 and it would be unreasonable or impracticable to meet those current standards.

* * * * *

■ 5. Revise § 155.380 to read as follows:

§ 155.380 Oily water separating equipment and bilge alarm approval standards.

(a) On U.S. inspected ships, oily water separating equipment and bilge alarms must be approved under 46 CFR 162.050.

(b) On U.S. uninspected ships and foreign ships, oily water separating equipment and bilge alarms must be approved under either 46 CFR 162.050 or MARPOL 73/78 Annex I.

Note to § 155.380(b): A copy of Annex I to the International Convention for the Prevention of Pollution from Ships, 1973 as modified by the Protocol of 1978 relating thereto, as amended (MARPOL 73/78) may be purchased from the International Maritime Organization, Publications Section, 4 Albert Embankment, London SE1 75R, United Kingdom, Telex 23588; see also *http://www.imo.org.*

(c) A ship that is required to have a bilge alarm may defer installment and use a previously installed bilge monitor provided the bilge monitor met Coast Guard approval requirements at the time of its installation and it does not allow more than a 15 ppm oil content in water discharge.

(d) The accuracy of the bilge alarms must be checked at IOPP Certificate renewal surveys according to the manufacturer's instructions. Alternatively, the unit may be replaced by a calibrated bilge alarm. The calibration certificate for the bilge alarm, which certifies the date of the last calibration check, should be retained onboard for inspection purposes. The accuracy checks can only be done by the manufacturer or persons authorized by the manufacturer.

(e) Ship staff training must include familiarization in the operation and maintenance of the equipment.

(f) The routine maintenance of the oily water separating equipment and the bilge alarm must be clearly defined by the manufacturer in the associated operating and maintenance manuals. All routine and repair maintenance must be recorded.

PART 157—RULES FOR THE PROTECTION OF THE MARINE ENVIRONMENT RELATING TO TANK VESSELS CARRYING OIL IN BULK

■ 6. Revise the authority citation for part 157 to read as follows:

Authority: 33 U.S.C. 1903; 46 U.S.C. 3703, 3703a (note); Department of Homeland Security Delegation No. 0170.1. Subparts G, H, and I are also issued under section 4115(b), Pub. L. 101–380, 104 Stat. 520; Pub. L. 104–55, 109 Stat. 546.

■ 7. Revise § 157.02 to read as follows:

§ 157.02 Incorporation by reference: Where can I get a copy of the publications mentioned in this part?

(a) Certain material is incorporated by reference into this part with the approval of the Director of the Federal Register under 5 U.S.C. 552(a) and 1 CFR part 51. To enforce any edition other than that specified in this section, the Coast Guard must publish notice of change in the **Federal Register** and the material must be available to the public. All approved material is available for inspection at the National Archives and Records Administration (NARA). For information on the availability of this material at NARA, call 202–741–6030 or go to *http://www.archives.gov/federal_register/code_of_federal_regulations/ibr_locations.html.* Also, it is available for inspection at the Coast Guard, Systems Engineering Division (CG–5213), Office of Design and Engineering Standards, U.S. Coast Guard, 2100 Second Street, SW., Washington, DC 20593–0001, telephone 202–372–1379, and is available from the sources indicated in this section.

(b) *International Maritime Organization (IMO)*—4 Albert Embankment, London SE1 7SR, United Kingdom.

(1) IMCO Assembly Resolution A.393(X), adopted on 14 November 1977, Recommendation on International Performance and Test Specifications For Oily Water Separating Equipment and Oil Content Meters (''A.393(x)''), incorporation by reference approved for § 157.12.

(2) IMO Assembly Resolution A.496(XII), Adopted on 19 November 1981, Agenda Item 11, Guidelines and Specifications for Oil Discharge Monitoring and Control Systems for Oil Tankers (''A.496(XII)''), incorporation by reference approved for § 157.12.

(3) IMO Assembly Resolution A.586(14), Adopted on 20 November 1985, Agenda item 12, Revised Guidelines and Specifications for Oil Discharge Monitoring and Control Systems for Oil Tankers (''A.586(14)''), incorporation by reference approved for § 157.12.

(4) IMO Marine Environment Protection Committee Resolution MEPC.13 (19), adopted on 9 December 1983, Guidelines for Plan Approval and Installation Survey of Oil Discharge Monitoring and Control Systems for Oil Tankers and Environmental Testing of Control Sections Thereof (''MEPC.13(19)''), incorporation by reference approved for § 157.12.

(5) IMO Marine Environment Protection Committee Resolution MEPC.108(49), Adopted on 18 July 2003, Revised Guidelines and Specifications for Oil Discharge Monitoring and Control Systems for Oil Tankers (''MEPC.108(49)''), incorporation by reference approved for § 157.12.

(6) IMO Assembly Resolution A.601(15), Provision and Display of Manoeuvring Information on Board Ships, Annex sections 1.1, 2.3, 3.1, and 3.2 with appendices, adopted on 19 November 1987 (''A.601(15)''), incorporation by reference approved for § 157.450.

(7) IMO Assembly Resolution A.744(18), Guidelines on the Enhanced Programme of Inspections During Surveys of Bulk Carriers and Oil Tankers, Annex B sections 1.1.3–1.1.4, 1.2–1.3, 2.1, 2.3–2.6, 3–8, and Annexes 1–10 with appendices, adopted 4 November 1993 (''A.744(18)''), incorporation by reference approved for § 157.430.

(8) IMO Assembly Resolution A.751(18), Interim Standards for Ship Manoeuvrability, Annex sections 1.2, 2.3–2.4, 3–4.2, and 5, adopted 4 November 1993 with Explanatory Notes in MSC/Circ. 644 dated 6 June 1994 (''A.751(18)''), incorporation by reference approved for § 157.445.

(c) *Oil Companies International Marine Forum (OCIMF)* 27 Queen Anne's Gate, London, SW1H 9BU, England].

(1) International Safety Guide for Oil Tankers and Terminals, Fourth Edition, Chapters 6, 7, and 10, 1996, incorporation by reference approved for § 157.435.

(2) [Reserved]

§ 157.03 [Amended]

■ 8. In § 157.03, remove the words ''cargo monitor'' from paragraph (2) of the definition of ''clean ballast'', and add, in their place, the words ''oil discharge monitoring''.

§ 157.11 [Amended]

■ 9. In § 157.11 (b)(2)(iii), remove the words ''a cargo monitor'' and add, in their place, the words ''an oil content meter''.

■ 10. Revise § 157.12 to read as follows:

§ 157.12 Oil discharge monitoring and control system.

(a) Each vessel must have an oil discharge monitoring and control system (monitoring system) that is designed for use with each type of cargo oil that the vessel carries.

(b) Each oil content meter component of the monitoring system installed on a U.S. vessel must be approved under 46 CFR part 162, subpart 162.050. Each oil content meter component of the

monitoring system installed on a foreign vessel must be approved:

(1) Under 46 CFR part 162, subpart 162.050; or

(2) As meeting IMO Marine Environment Protection Committee resolution MEPC.108(49) by a country that has ratified the MARPOL 73/78. Paragraph 1.2.2 of MEPC.108(49) provides, as to equipment installed in ''oil tankers the keels of which are laid, or which are at a similar stage of construction, before January 1, 2005,'' for alternative compliance with IMO resolutions A.393(X), A.496(XII), MEPC.13(19), and A.586(14). These five resolutions are incorporated by reference (*see* § 157.02).

(c) Each oil discharge monitoring and control system on a U.S. vessel must be installed in accordance with §§ 157.12b through 157.12g of this part.

■ 11. Add §§ 157.12a through 157.12g to read as follows:

§ 157.12a Definitions.

As used in §§ 157.12a through 157.12g—

Control section means a unit in a monitoring system composed of the items specified in § 157.12d(a)(4)(viii).

Control unit means a device that receives automatic signals of oil content of the effluent ppm, flow rate of discharge m^3/hour, ship's speed in knots, ship's position-latitude and longitude, date and time (GMT, Greenwich Mean Time), and status of the overboard discharge control. The control unit makes automatic recordings of data as specified in § 157.12d(h)(2).

Oil discharge monitoring and control system or *monitoring system* means a system that monitors the discharge into the sea of oily ballast or other oil-contaminated water from the cargo tank areas and comprises the items specified in § 157.12d(a)(4).

Overboard discharge control means a device that automatically initiates the sequence to stop the overboard discharge of the effluent in alarm conditions and prevents the discharge throughout the period the alarm condition prevails. The device may be arranged to close the overboard valves or to stop the relevant pumps, as appropriate.

PPM means parts of oil per million parts of water by volume.

Starting interlock means a facility that prevents the initiation of the opening of the discharge valve or the operation of other equivalent arrangements before the monitoring system is fully operational when use of the monitoring system is required by the Convention.

§ 157.12b Implementation requirements.

Oil discharge monitoring and control systems must be fitted to oil tankers to which this subpart applies. A monitoring and control system must employ a control unit and be fitted with a starting interlock and overboard discharge control.

§ 157.12c Construction, maintenance, security, calibration, and training.

(a) The oil discharge monitoring and control system must be designed to ensure that user access is restricted to essential controls. Access beyond these controls must be available for emergency maintenance and temporary repair but must require the breaking of security seals or activation of another device, which indicates an entry to the equipment.

(b) The seals must be of a design that only the manufacturer or the manufacturer's agent can replace the seals or reset the system following inspection and permanent repairs to the equipment.

(c) The accuracy of the monitoring system must be verified during International Oil Pollution Prevention certificate renewal surveys. The calibration certificate certifying date of last calibration check must be retained on board for inspection purposes.

(d) The monitoring system may have several scales as appropriate for its intended use. The recording device fitted to a meter which has more than one scale must indicate the scale which is in use.

(e) Simple means must be provided aboard ship to check on instrument drift, repeatability of the instrument reading, and the ability to re-zero the instrument.

(f) Ship staff training must include familiarization in the operation and the maintenance of the equipment.

(g) The routine maintenance of the monitoring system and troubleshooting procedures must be clearly defined in the Operating and Maintenance Manual. All routine maintenance and repairs must be recorded.

§ 157.12d Technical specifications.

(a) *Oil discharge monitoring and control system.* (1) The monitoring system must be capable of effectively monitoring and controlling the discharge of any effluent into the sea through those overboard discharge outlets permitted by § 157.11 that are necessary to fulfill the operational requirements of the oil tanker.

(2) The discharge of dirty ballast water or other oil-contaminated water from the cargo tank areas into the sea through outlets, which are not controlled by the monitoring system is prohibited.

(3) The monitoring system must function effectively under all environmental conditions normally encountered by oil tankers, and must be designed and constructed to satisfy the specifications for approval in 46 CFR subpart 162.050. Moreover—

(i) The system must be designed so a discharge of dirty-ballast or other oil-contaminated water from the cargo tank areas cannot take place unless the monitoring system is in the normal operating mode and the relevant sampling point has been selected;

(ii) The system should sample the effluent discharge from a minimum number of discharge outlets and be arranged so that discharge overboard can take place via only one outlet at a time;

(iii) Where it is intended that more than one line be used for simultaneous discharging purposes, one oil content meter, together with a flow meter, must be installed in each discharge line. These instruments must be connected to a common processor; and

(iv) To avoid alarms because of short-term high-oil-concentration signals (spikes) causing indications of high instantaneous rates of discharge, the short-term high ppm signal may be suppressed for a maximum of 10 seconds. Alternatively, the instantaneous rate of discharge may be continuously averaged during the preceding 20 seconds or less as computed from instantaneous ppm values of the oil content meter readings received at intervals not exceeding 5 seconds.

(4) The monitoring system must comprise—

(i) An oil content meter to measure the oil content of the effluent in ppm. The meter must be approved in accordance with the provisions contained in 46 CFR subpart 162.050 and certified to take into account the range of cargoes carried;

(ii) A flow rate indicating system to measure the rate of effluent being discharged into the sea;

(iii) A ship speed indicating device to give the ship's speed in knots;

(iv) A ship position indicating device to give the ship's position-latitude and longitude;

(v) A sampling system to convey a representative sample of the effluent to the oil content meter;

(vi) An overboard discharge control to stop the overboard discharge;

(vii) A starting interlock to prevent the discharge overboard of any effluent unless the monitoring system is fully operational; and

(viii) A control section comprising—

(A) A processor that accepts signals of oil content in the effluent, the effluent flow rate, and the ship's speed, and computes these values into liters of oil discharged per nautical mile and the total quantity of oil discharged;

(B) A means to provide alarms and command signals to the overboard discharge control;

(C) A recording device to provide a record of data required under § 157.12d(h)(2);

(D) A data display to exhibit the current operational data required under § 157.12d(i);

(E) A manual override system to be used in the event of failure of the monitoring system;

(F) A means to provide signals to the starting interlock to prevent the discharge of any effluent before the monitoring system is fully operational; and

(G) The control section of the monitoring system must be tested in accordance with the vibration testing requirements described in 46 CFR 162.050–37.

(5) Each main component of the monitoring system must be fitted with a name plate, properly identifying the component by assembly drawing number, type or model number, and serial number, as appropriate.

(6) The electrical components of the monitoring system that are to be installed in an explosive atmosphere must be in compliance with 46 CFR 162.050–25.

(7) Each main component of the monitoring system must be designed in accordance with the applicable requirements contained in subchapters F and J.

(b) *Sampling system.* (1) Sampling points must be located so relevant samples can be obtained from those outlets used for operational discharges in accordance with paragraph (a) of this section. The sampling probes located in the overboard discharge lines and the piping system connecting the sampling probes to the oil content meter must meet the requirements of this paragraph.

(2) The piping and probes must be—

(i) Of a material resistant to fire, corrosion, and oil; and

(ii) Of adequate strength and properly jointed and supported.

(3) The system must have a stop-valve fitted adjacent to each probe, except that, where the probe is mounted in a cargo line, two stop-valves must be fitted, in series, in the sample line. One of these may be the remote controlled sample selector valve.

(4) Sampling probes must be arranged for easy withdrawal and must, as far as practicable, be mounted at an accessible location in a vertical section of the discharge line. Should it be necessary to fit sampling probes in a horizontal section of the discharge line it must be ascertained, during the installation survey, that the pipe runs full of liquid at all times during the discharge of the effluent. Sampling probes must normally penetrate inside the discharge pipe to a distance of one quarter the diameter of that pipe.

(5) Means must be provided for cleaning the probes and piping system by the provision of permanent clean water flushing arrangements or an equivalent method. The design of the probes and piping must be such as to minimize their clogging by oil, oily residue, and other matter.

(6) The velocity of the fluid in the piping must be such that, taking into consideration the length of the piping, the overall response time must be as short as possible between an alteration in the mixture being pumped and the alteration in the oil content meter reading. In no case should the response time, including the response time of the oil content meter, be more than 40 seconds.

(7) The location of sampling probes in relation to any point of flow diversion to a slop tank must be selected with regard to the need for sampling the oily water in the recirculation mode.

(8) The arrangements for driving the sampling pump or any other pumps used in the system must account for the safety requirements of the space in which the pump is located. Any bulkhead penetration between a hazardous and a non-hazardous area must be of a design meeting the requirements of 46 CFR 32.60–20 and 46 CFR subpart 111.105.

(9) The flushing arrangement must be such that where necessary it can be utilized for test-running and stabilizing the oil content meter and correcting for zero setting.

(10) Sample water returning to the slop tank must not be allowed to free-fall into the tank. In tankers equipped with an inert gas system, a water seal meeting the requirements of 46 CFR 32.53–10(b) must be arranged in the piping leading to a slop tank.

(11) A valve must be provided for the manual collection of samples from the inlet piping to the oil content meter at a point downstream of any sampling pump.

(c) *Flow rate indicating system.* (1) A flow meter for measuring the rate of discharge must be installed in a vertical section of a discharge line or in any other section of a discharge line as appropriate, so as to be always filled with the liquid being discharged.

(2) A flow meter must employ an operating principle which is suitable for shipboard use and, where relevant, can be used in large diameter pipes.

(3) A flow meter must be suitable for the full range of flow rates that may be encountered during normal operation. Alternatively, arrangements such as the use of two flow meters of different ranges or a restriction of the operational flow rate range may be employed if necessary to meet this requirement.

(4) The flow meter, as installed, must have an accuracy of ±10 percent, or better, of the instantaneous rate of discharge throughout the operating range for discharging the effluent.

(5) Any component part of the flow meter in contact with the effluent should be of corrosion-resistant and oil-resistant material of adequate strength.

(6) The design of the flow metering arrangements must account for the safety requirements of the space in which such metering arrangements are located.

(d) *Ship's speed indicating system.* The automatic speed signal required for a monitoring system must be obtained from the ship's speed indicating device by means of a repeater signal. The speed information used may be either speed over the ground or speed through the water, depending upon the speed measuring equipment installed on board.

Note to paragraph (d): See ''Recommendation on Performance Standards for Devices to Indicate Speed and Distance,'' Annex to resolution A.824(19) as amended by resolution MSC.96(72).

(e) *Ship position indicating device.* The ship position indicating device must consist of a receiver for a global navigation satellite system, a terrestrial radio navigation system, or other means suitable for use at all times throughout the intended voyage to establish and update the ship's position by automatic means.

(f) *Overboard discharge control management.* The overboard discharge control must be able to stop the discharge of the effluent into the sea automatically by either closing all relevant overboard discharge valves or stopping all relevant pumps. The discharge control arrangement must be fail-safe so that all effluent discharge is stopped when the monitoring system is not in operation, at alarm conditions, or when the monitoring system fails to function.

(g) *Processor and transmitting device.* (1) The processor of a control section must receive signals from the oil content

meter, the flow rate indicating system and the ship's speed indicating system at time intervals not exceeding 5 seconds and must automatically compute the following:

(i) Instantaneous rate of discharge of oil in liters per nautical mile; and

(ii) Total quantity of oil discharged during the voyage in cubic meters or liters.

(2) When the limits imposed by § 157.37(a)(3) and (4) are exceeded, the processor must provide alarms and provide command signals to the overboard discharge control arrangement, which will cause the discharge of effluent into the sea to stop.

(3) The processor must normally include a device for the continuous generation of time and date information. Alternative arrangements that ensure the automatic and continuous reception of time and date information from an external source may be approved by the Marine Safety Center.

(4) In the event of power failure the processor must retain its memory in respect to computation of the total quantity of oil discharged, time, and date. A printout of data must be obtained when the monitoring system is operating with manual override, but the printout of data is not required if, when the power fails, the monitoring system activates the overboard discharge control to stop the discharge of effluent.

(h) *Recording devices.* (1) The recording device of a control section must include a digital printer, which may be formatted electronically. The recorded parameters must be explicitly identified on the printout. The printout must be legible and must remain so once removed from the recording device and must be retained for at least 3 years.

(2) The data to be automatically recorded must include at least the following:

(i) Instantaneous rate of discharge of oil (liters per nautical mile);

(ii) Instantaneous oil content (ppm);

(iii) The total quantity of oil discharged (cubic meters or liters);

(iv) Time and date (GMT, Greenwich Mean Time);

(v) Ship's speed in knots;

(vi) Ship's position—latitude and longitude;

(vii) Effluent flow rate;(viii) Status of the overboard discharge control or arrangement;

(ix) Oil type selector setting, where applicable;

(x) Alarm condition;

(xi) Failure, including, but not limited to, fault or no flow; and

(xii) Override action, including, but not limited to, manual override, flushing, and calibration. Any information inserted manually as a result of an override action must be identified as such on the printout.

(3) Data required in paragraph (h)(2) of this section must be printed out or may be stored electronically with printout capability, with the following minimum frequency:

(i) When the discharge is started;

(ii) When the discharge is stopped;

(iii) At intervals of not more than 10 minutes (except when the system is in stand-by mode);

(iv) When an alarm condition develops;

(v) When normal conditions are restored;

(vi) Whenever the computed rate of discharge varies by 10 liters per nautical mile;

(vii) When zero-setting or calibration modes are selected; and

(viii) On manual command.

(4) The recording device must be located in a position easily accessible to the person in charge of the overboard discharge operation.

(i) *Data display.* (1) In addition to the recorded printout, the current data must be visibly displayed and at a minimum contain the following:

(i) Instantaneous rate of discharge of oil (liters per nautical mile);

(ii) Total quantity of oil discharged (cubic meters or liters);

(iii) Instantaneous oil content (ppm);

(iv) Flow rate;

(v) Ship's speed; and

(vi) Status of the overboard discharge control or arrangement.

(2) The data display must be located in a position easily observed by the person in charge of the overboard discharge operation.

(j) *Manually operated alternatives in the event of equipment malfunction.* Acceptable alternative means of obtaining information in the event of a failure in the monitoring system include the following:

(1) Oil content meter or sampling system: Visual observation of the surface of the water adjacent to the effluent discharge;

(2) Flow meter: Pump discharge characteristics;

(3) Ship's speed indicating device: Main engine rpm;

(4) Processor: Manual calculation and manual recording; and

(5) Overboard discharge control: manual operation of pumps and valves.

(k) *Alarm conditions resulting in the stopping of discharge.* Audio-visual alarms must be activated for any of the following conditions and the monitoring system must be so arranged that the discharge of effluent into the sea is stopped:

(1) Whenever the instantaneous rate of discharge of oil exceeds 30 liters per nautical mile;

(2) When the total quantity of oil discharged reaches 1/30,000 of the previous cargo for new vessels and 1/15,000 for existing vessels; or

(3) In the event of failure of the system's operation, such as:

(i) Power failure;

(ii) Loss of sample;

(iii) Significant failure of the measuring or recording system; or

(iv) When the input of any sensor exceeds the effective capacity of the system.

(l) *Location of alarm indicator.* The alarm indicator of the system must be installed in the cargo control room, where provided, and/or in other places where it will attract immediate attention and action.

§ 157.12e Certificate of approval.

(a) A copy of the certificate of approval for the oil content meters must be carried aboard an oil tanker fitted with such equipment at all times.

(b) A certificate of type approval must be issued for the specific application for which the oil content meter is approved, that is, for crude oil, ''black'' products, ''white'' products, or other products or applications as listed on the certificate.

§ 157.12f Workshop functional test requirements.

(a) Each oil content meter and each control section of a monitoring system must be subjected to a functional test on a suitable test bench prior to delivery. The detailed program for a functional test of such equipment must be developed by the manufacturer, taking into account the features and functions of the specific design of equipment. A completed workshop certificate including the delivery test protocol must be received with each unit delivered.

(b) A functional test conducted on an oil content meter must include the following operations:

(l) A check of flow rate, pressure drop, or an equivalent parameter as appropriate;

(2) A check of all alarm functions built into the meter;

(3) A check of all switching functions interconnecting with other parts of the system; and

(4) A check for correct reading at several ppm values on all measurement scales when operated on an oil appropriate for the application of the oil content meter or by an equivalent method.

(c) A functional check conducted on a control section of a monitoring system must include the following operations:

(1) A check of all alarm functions;

(2) A check of the correct function of the signal processor and the recording equipment when simulated input signals of ppm, flow rate, and speed are varied;

(3) A check that the alarm is activated when the input signals are varied to exceed the discharge limits contained in § 157.37(a)(3) and (4);

(4) A check that a signal is given to the overboard discharge control when alarm conditions are reached; and

(5) A check that the alarm is activated when each one of the input signals is varied to exceed the capacity of the system.

§ 157.12g Plan approval requirements.

Adequate documentation must be prepared well in advance of the intended installation of a monitoring system and must be submitted to the Marine Safety Center for approval. The following documentation must be submitted:

(a) *A description of the monitoring system*. The description must include a diagram of the pumping and piping arrangements identifying the operational outlets for dirty ballast and oil-contaminated water from the cargo-tank area and compatible with the operational requirements set out in the oil tanker's cargo and ballast handling manuals. Special considerations will be given to installations in oil tankers, which have unusual pumping and piping arrangements.

(b) Equipment manuals, supplied by manufacturers, which must contain details of the major components of the monitoring system.

(c) An operations and technical manual for the complete monitoring system which is proposed to be installed in the oil tanker. This manual must cover the arrangements and operation of the system as a whole and must specifically describe parts of the system, which are not covered by the manufacturer's equipment manuals.

(d) The operations section of the manual must include normal operational procedures and procedures for the discharge of oily water in the event of malfunction of the equipment.

(e) The technical section of the manual must include adequate information (description and diagram of the pumping and piping arrangements of the monitoring system and electrical/electronic wiring diagrams) to enable fault finding and must include instructions for keeping a maintenance record.

(f) A technical installation specification defining, among other things, the location and mounting of components, arrangements for maintaining the integrity of the boundary between safe and hazardous spaces, and the arrangement of the sample piping, including calculation of the sample response time referred to in § 157.12d(b)(6). The installation must comply with manufacturer's specific installation criteria.

(g) A copy of the certificate of type approval for the oil content meter.

(h) Technical documentation relevant to other main components of the monitoring system. This documentation must include the vibration report for the control section of the monitoring section.

(i) A recommended test and checkout procedure specific to the monitoring system installed. This procedure must specify all the checks to be carried out in a functional test by the installation contractor and must provide guidance for the surveyor when carrying out the onboard survey of the monitoring system and confirming the installation reflects the manufacturer's specific installation criteria.

§ 157.37 [Amended]

■ 12. In § 157.37—

■ a. In the introductory text of paragraph (a)(6), remove the words ''a cargo monitor'' and add, in their place, the words ''an oil discharge monitoring'';

■ b. In paragraph (c), remove the words ''cargo monitor'' and add, in their place, the words ''oil discharge monitoring and control system''; and

■ c. In paragraph (d), remove the words ''a cargo monitor'' and add, in their place, the words ''an oil discharge monitoring and control system''.

■ 13. Revise § 157.39(b)(3) to read as follows:

§ 157.39 Machinery space bilges.

* * * * *

(b) * * *

(3) Has in operation an oil discharge monitoring and control system in compliance with § 157.12 and oil separating equipment in compliance with 33 CFR 155.380.

§ 157.43 [Amended]

■ 14. In § 157.43—

■ a. In the introductory text of paragraph (a), remove both occurrences of the words ''cargo monitor'' and add, in their respective places, the words ''oil discharge monitoring and control system''; and

■ b. In the introductory text of paragraph (b), remove the words ''a cargo monitor'' and add, in their place, the words ''an oil discharge monitoring and control system''.

Appendix F to Part 157—[Removed and Reserved]

■ Appendix F to Part 157 [Removed and Reserved]

■ 15. Remove and reserve Appendix F to part 157.

Title 46—Shipping

PART 162—ENGINEERING EQUIPMENT

■ 16. Revise the authority citation for part 162 to read as follows:

Authority: 33 U.S.C. 1321(j), 1903; 46 U.S.C. 3306, 3703, 4104, 4302; E.O. 12234, 45 FR 58801, 3 CFR, 1980 Comp., p. 277; E.O. 12777, 56 FR 54757, 3 CFR, 1991 Comp., p. 351; Department of Homeland Security Delegation No. 0170.1.

■ 17. In § 162.050–1, revise paragraph (a)(1) to read as follows:

§ 162.050–1 Scope.

(a) * * *

(1) Procedures for approval of 15 ppm separators, oil content meters, and bilge alarms.

* * * * *

■ 18. Revise § 162.050–3 to read as follows:

§ 162.050–3 Definitions.

As used in this subpart—

15 ppm separator means a separator that is designed to remove enough oil from an oil-water mixture to provide a resulting mixture that has an oil concentration of 15 ppm or less.

Bilge alarm means an instrument that is designed to measure the oil content of oily mixtures from machinery space bilges and fuel oil tanks that carry ballast and activate an alarm at a set concentration limit and record date, time, alarm status, and operating status of the 15 ppm separator.

Independent laboratory means a laboratory that—

(1) Has the equipment and procedures necessary to approve the electrical components described in §§ 162.050–21(b) and 162.050–25(c), or to conduct the test described in § 162.050–37(a); and

(2) Is not owned or controlled by a manufacturer, supplier, or vendor of separators, oil content meters, or bilge alarms.

Oil content meter or *meter* means a component of the oil discharge monitoring and control system that is designed to measure the oil content of cargo residues from cargo tanks and oily mixtures combined with these residues.

PPM means parts per million by volume of oil in water.

Response time means the time elapsed between an alteration in the

sample being supplied to the bilge alarm and the ppm display showing the correct response.

■ 19. Revise § 162.050–4 to read as follows:

§ 162.050–4 Incorporation by reference: Where can I get a copy of the publications mentioned in this part?

(a) Certain material is incorporated by reference into this subpart with the approval of the Director of the Federal Register under 5 U.S.C. 552(a) and 1 CFR part 51. To enforce any edition other than that specified in paragraph (b) of this section, the Coast Guard must publish a notice of change in the **Federal Register** and the material must be available to the public. All approved material is available for inspection at the National Archives and Records Administration (NARA). For information on the availability of this material at NARA, call 202–741–6030 or go to *http://www.archives.gov/federal_register/code_of_federal_regulations/ibr_locations.html*. Also, it is available for inspection at the Coast Guard, Office of Design and Engineering Standards (CG–521), 2100 Second Street, SW., Washington, DC 20593–0001, telephone 202–372–1379, and is available from the sources indicated in paragraph (b) of this section.

(b) *American Society for Testing and Materials* 100 Barr Harbor Drive, West Conshohocken, PA 19428–2959.

(1) ASTM D2777–98, Standard Practice for Determination of Precision and Bias of Applicable Test Methods of Committee D–19 on Water (''ASTM D2777–98''), incorporation by reference approved for § 162.050–15.

(2) [Reserved]

(c) *International Organization for Standardization (ISO)* 1, rue de Varembé, Case postale 56, CH–1211 Geneva 20, Switzerland (Internet: *http://www.iso.org):*

(1) International Standard ISO 8217 Third edition 2005–11–01, Petroleum products—Fuels (class F)—Specifications of marine fuels (''ISO 8217''), incorporation by reference approved for § 162.050–20.

(2) International Standard ISO 9377–2 First edition 2000–10–15, Water Quality—Determination of hydrocarbon oil index—Part 2: Method using solvent extraction and gas chromatography (''ISO 9377–2''), incorporation by reference approved for § 162.050–39.

(d) *Underwriters Laboratories, Inc., (UL)* 12 Laboratory Drive, Research Triangle Park, NC 27709–3995

(1) Underwriters Laboratories Standard 913 (as revised April 8, 1976), incorporation by reference approved for §§ 162.050–21, 162.050–25.

(2) [Reserved]

■ 20. In § 162.050–5, revise the introductory text of paragraph (a) and revise paragraph (a)(6) and (a)(8) to read as follows:

§ 162.050–5 Contents of application.

(a) An application for approval of a separator, oil content meter, or a bilge alarm must contain the following information:

* * * * *

(6) An operating and maintenance manual containing detailed and easily understandable instructions on installation, operation, calibration, zeroing, and maintenance of the item.

* * * * *

(8) For each oil content meter, a statement of whether it is to be used with crude oils, refined products, or both.

* * * * *

■ 21. In § 162.050–7—

■ a. In paragraph (e), remove the words ''fifty (50)'' wherever they appear and add, in their place, the figure ''50'';

■ b. Revise paragraph (f) to read as set out below;

■ c. Revise paragraph (h)(2) to read as set out below;

■ d. In paragraph (h)(3), remove ''No. 3S'' and add, in its place, ''No. 3A'';

■ e. In paragraph (h)(4), remove ''No.5S'' and add, in its place, ''No. 5A'', and

■ f. Revise the introductory text of paragraphs (i) and (i)(2) to read as set out below;

■ g. Remove paragraph (j) and redesignate paragraph (k) as paragraph (j);

■ h. Revise newly redesignated paragraphs (j)(2) and (j)(3) to read as follows:

§ 162.050–7 Approval procedures.

* * * * *

(f) The approval tests in this subpart must be performed by a facility designated under § 162.050–15. The facility must also be accepted as an independent laboratory by the Coast Guard under subpart 159.010 of this chapter. The facility must perform each test in accordance with the test conditions prescribed in this subpart for the test, prepare a test report for the item if it completes all of the tests, and send the report with three copies to the Commanding Officer, USCG Marine Safety Center. The applicant may observe the tests. If an item does not complete testing, a new application must be made before retesting.

* * * * *

(h) * * *

(2) The oil content of each sample of separated water effluent taken during approval testing is 15 ppm or less;

* * * * *

(i) An oil content meter is approved under this subpart if—

* * * * *

(2) Each oil content reading recorded during approval testing is ± 10 ppm or ± 10 percent, whichever is greater, of the oil content of the sample influent mixture taken at the time of the reading;

* * * * *

(j) * * *

(2) The oil content of each sample taken during approval testing is 15 ppm ± 5 ppm;

(3) Its response time is five seconds or less; and

* * * * *

■ 22. In § 162.050–9, add paragraph (a)(6) to read as follows:

§ 162.050–9 Test report.

(a) * * *

(6) A statement that the lab followed the testing procedures prescribed in 46 CFR subpart 162.050.

* * * * *

§ 162.050–11 [Amended]

■ 23. In § 162.050–11—

■ a. In paragraph (a), remove the word ''monitor'' and add, in its place, the words ''oil content meter''; and

■ b. In paragraph (b)(8), remove the words ''a cargo monitor'' and add, in their place, the words ''an oil content meter''.

§ 162.050–14 [Removed]

■ 24. Remove § 162.050–14.

■ 25. In § 162.050–15, revise paragraphs (a), (d), (e), (f)(3), and (h) to read as follows:

§ 162.050–15 Designation of facilities.

(a) Each request for designation as a facility authorized to perform approval tests must be submitted to the Commanding Officer, U.S. Coast Guard Marine Safety Center, Engineering Division, 2100 2nd St., SW., Washington, DC 20593–0001.

* * * * *

(d) If the facility meets the requirements in paragraphs (g)(1) through (g)(4) of this section, they must obtain 12 samples containing mixtures of oil in water that are within a 10-to-30 ppm range that can be verified by an independent third-party source mutually acceptable to the applying lab and the Coast Guard prior to verification.

(e) The facility must measure the oil content of each sample using the

method described in § 162.050–39 and report the value of each of the 12 measurements to the Commanding Officer, U.S. Coast Guard Marine Safety Center, Engineering Division, 2100 2nd St., SW., Washington, DC 20593–0001.

(f) * * *

(3) The absolute value of X_d must be smaller than u based on the following analysis of paired observations:

(i) Calculate the value of $\bar{X}_d$ and S_d. This is the mean and standard deviation, respectively, of the differences between the known sample concentrations and the values obtained by the facility with their equipment. The value of $\bar{X}_d$ for the 12 measurements described in paragraph (e) of this section, or for 11 measurements if paragraph (f)(2) of this section applies, must be within the range $1 \leq \bar{X}_d \leq + 1$.

(ii) Determine the appropriate critical value of the Student's t-distribution with (n-1) degrees of freedom for a confidence level of $\alpha = 0.01$. If all 12 samples meet the criteria of paragraph (f)(1) of this section then (n-1) = 11 and the critical value,

$$t_{1-\frac{\alpha}{2}},$$

is 3.106. If paragraph (f)(2) of this section applies, then (n-1) = 10 and

$$t_{1-\frac{\alpha}{2}} = 3.169.$$

(iii) Compute the value of u, where

$$u = t_{1-\frac{\alpha}{2}}\left(\frac{s_d}{\sqrt{n}}\right),$$

where n = 12 if all samples meet the criteria of paragraph b(f)(1) and n = 11 if paragraph (f)(2) applies.

(iv) Compare the absolute value of $\bar{X}_d$ to the value of u. If $|\bar{X}_d| < u$, then the facility meets the criteria.

* * * * *

(h) A facility may not subcontract for approval testing unless previously authorized by the Coast Guard. A request for authorization to subcontract must be sent to the Commanding Officer, U.S. Coast Guard Marine Safety Center, Engineering Division, 2100 2nd St., SW., Washington, DC 20593–0001.

■ 26. In § 162.050–17—

■ a. Revise Figure 162.050–17(a) to read as set out below;

■ b. Revise paragraphs (b)(1), (b)(2), (c)(1), and (c)(3) as set out below;

■ c. Remove the reference to ''162.050–17(e)'' in paragraph (d), and add, in its place, the reference ''162.050–17(d)''; and

■ d. Remove Figure 162.050–17(e) and add, in its place, Figure 162.050–17(d) to read as follows:

§ 162.050–17 Separator test rig.

(a) * * *

FIGURE 162.050–17(a)—SEPARATOR TEST RIG

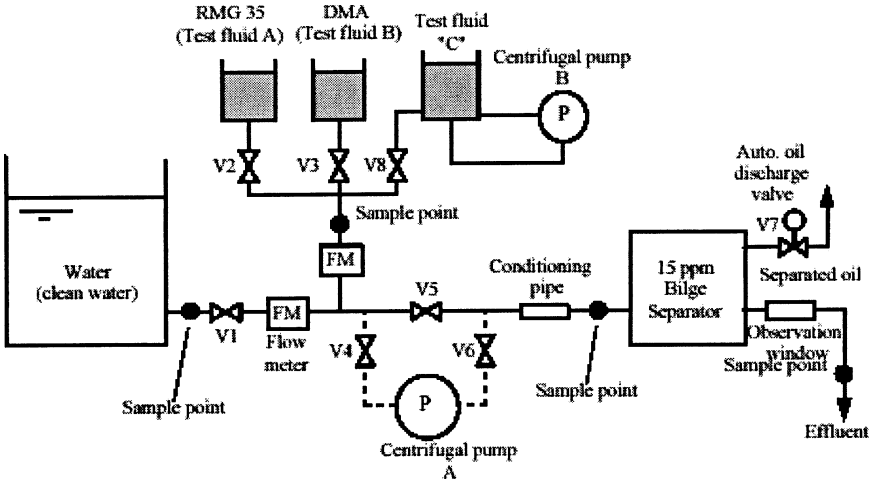

(b) * * *

(1) Be a centrifugal pump capable of operating at 1,000 revolutions per minute or more;

(2) Have a delivery capacity of at least 1.5 times the maximum throughput at which the separator being tested is designed to operate;

* * * * *

(c) * * *

(1) Influent water flows at a Reynolds Number of at least 10,000;

(2) * * *

(3) Its length is at least 20 times its inside diameter.

(d) * * *

FIGURE 162.050–17(d)—SAMPLE POINT

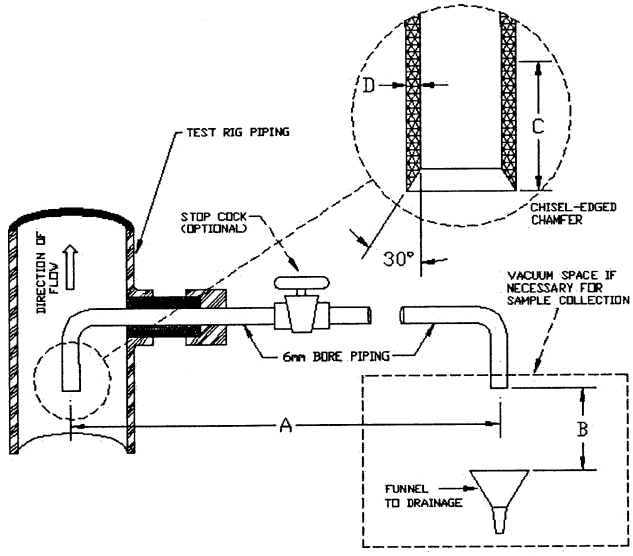

■ 27. In § 162.050–19—

■ a. In the section heading, remove the word ''Monitor'' and add, in its place, the words ''Oil content meter'';

■ b. In paragraph (a), remove the words ''monitors'' and ''monitor'' and add, in their respective places, the words ''oil content meters'' and ''meter'';

■ c. In paragraph (c), remove the text ''one thousand (1,000)'' and add, in its place, the figure ''1,000''; and

■ d. Revise Figure 162.050–19 to read as follows:

§ 162.050–19 Oil Content Meter and Bilge Alarm Test Rig

* * * * *

FIGURE 162.050–19—MONITOR AND BILGE ALARM TEST RIG

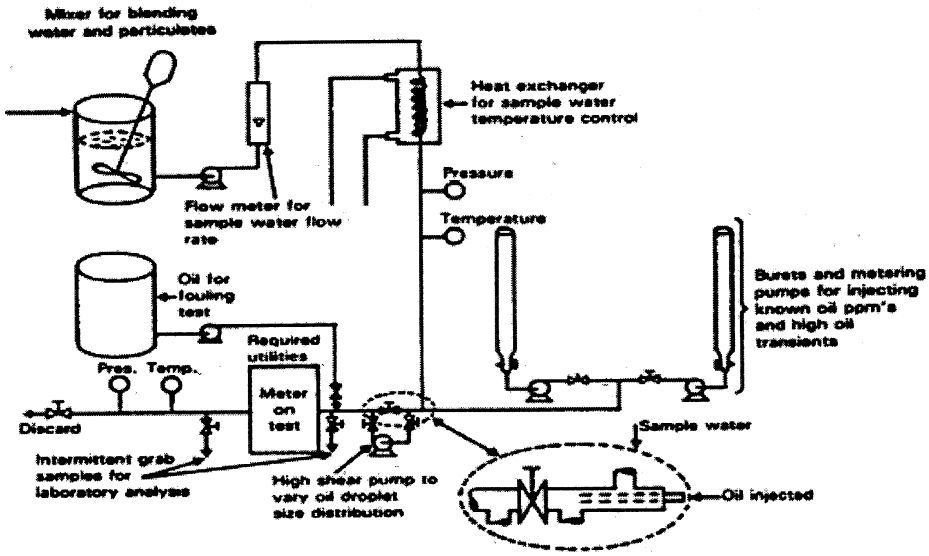

■ 28. Add § 162.050–20 to read as follows:

§ 162.050–20 Separator and bilge alarm test fluids.

(a) Tests required in §§ 162.050–23 and 162.050–35 must be performed using the following three types of test fluids:

(1) Test Fluid A, which is a marine residual fuel oil in accordance with ISO 8217 (incorporated by reference, see § 162.050–4), type RMG 380 (density at 15 °C not less than 980 kg/m^3);

(2) Test Fluid B which is a marine distillate fuel oil in accordance with ISO 8217, type DMA (density at 15 °C not less than 830 kg/m^3);

(3) Test Fluid C must be a mixture of an oil-in-fresh water emulsion, where 1 kg of the mixture consists of:

(i) 947.8 g of fresh water;

(ii) 25.0 g of Test Fluid A;

(iii) 25.0 g of Test Fluid B;

(iv) 0.5 g of surfactant (sodium salt of dodecylbenzene sulfonic acid) in the dry form; and

(v) 1.7 g of iron oxides, a black ferrosoferric oxide (Fe_3O_4) with a particle size distribution of which 90 percent is less than 10 microns, the remainder having a maximum particle size of 100 microns.

(b) Test Fluid C must be prepared as needed for § 162.050–23 or § 162.050–35 by using the following procedures:

(1) Measure out 1.2 times the quantity of surfactant required from the WORKSHEET FOR DETERMINING CONSTITUENTS OF TEST FLUID C, see figure 162.050–20;

(2) Mix it with fresh water and stir well in a small container to make a mixture until the surfactant has been thoroughly dissolved, but use no more than the minimum amount of water necessary to make a complete solution;

(3) Fill clean test fluid tank with fresh water with a quantity 1.2 times the volume of the total quantity of water in Test Fluid C needed for the test described in §§ 162.050–23 and 162.050–35;

(4) Operate the centrifugal pump B running at a speed of not less than 3,000 rpm with a flow rate at which the volume of the test fluid has been changed out at least once per minute;

(5) Add the surfactant mixture from paragraph (b)(2) of this section first, followed by oil and suspended solids (iron oxides) respectively, both 1.2 times of the required amounts, to the fresh water in the tank;

(6) To establish a stable emulsion keep running the centrifugal pump B for one hour and confirm no oil floats on the surface of the test fluid; and

(7) After the one hour stated in paragraph (b)(6) of this section, keep running the centrifugal pump B at reduced speed to approximately 10 percent of original flow rate, until the end of the test.

FIGURE 162.050–20

WORKSHEET FOR DETERMINING CONSTITUENTS OF TEST FLUID C:

1. Determine volumetric flow rate of separator in m^3/hr.

2. Determine net volume of fluid needed for testing with fluid C:

a. Multiply volumetric flow rate x 3 hours = Net volume (assumes conditioning time of approximately 30 minutes added to 2-1/2-hour test period)

3. Determine volume of Test Fluid C:

a. Multiply net volume * 0.06 = Fluid C volume

4. Determine amounts of constituents:

a. Volume of Test Fluid C: 1.2 x Net Volume;

b. Volume of fresh water in Test Fluid C: 0.9478 x volume of Test Fluid C;

c. Weight of Test Fluid A: 25 x volume of Test Fluid C;

d. Weight of Test Fluid B: 25 x volume of Test Fluid C;

e. Weight of surfactant: 0.5 x volume of Test Fluid C; and

f. Weight of iron oxide 1.7 x volume of Test Fluid C.

g. Specifications for tank of Test Fluid .C.

(1) The tank should be of a cylindrical shape, as illustrated in the diagram below. The level of the water should be: 2D ≥ H ≥ 0.5D, when preparing Test Fluid C.

(2) Outlet going to centrifugal pump B should be placed at as low a position to the tank as possible.

(3) Inlet to the tank should be fitted at the center of tank bottom so that the mixture flows upward to obtain uniform and stable emulsion.

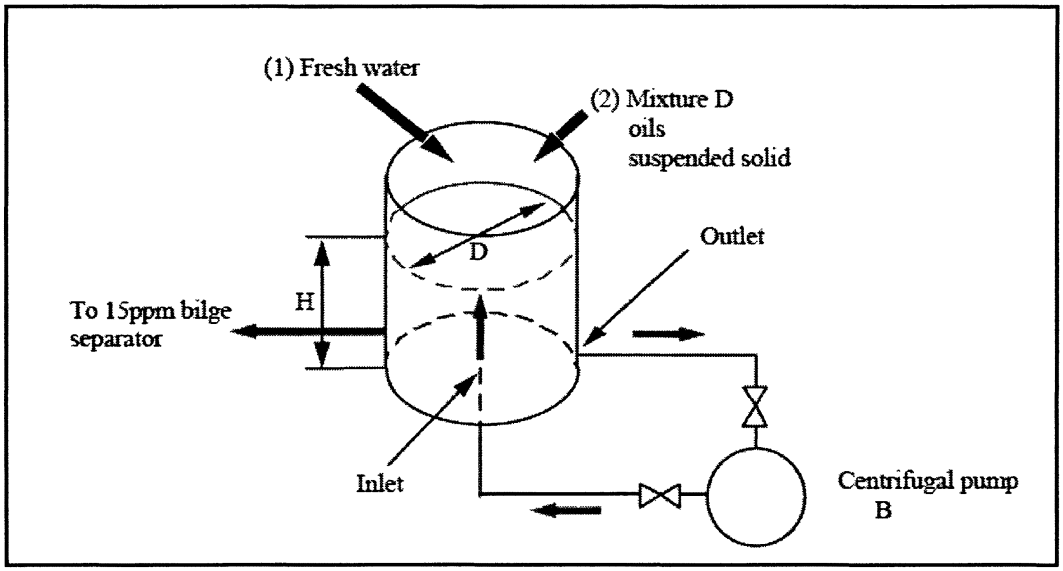

Figure 3 - Tank of Test Fluid "C"

Note:

(1) The tank should be of a cylindrical shape. The level of the water should be:

$$2D \geqq H \geqq 0.5D, \text{ when preparing Test Fluid "C".}$$

(2) Outlet going to centrifugal pump B should be placed at as low a position to the tank as possible.

(3) Inlet to the tank should be fitted at the center of tank bottom so that the mixture flows upward to obtain uniform and stable emulsion.

Example:

1. Bilge separator is rated at $2m^3$/hr;

2. Net volume needed for the test: Volume of test water: $2m^3$ x 3 hours = $6m^3$;

3. Volume vest Fluid C: 6 percent of test water = 0.06 x $6m^3$ = $0.36m^3$;

4. Actual volume to be prepared:

a. Volume of Test Fluid C to be prepared: 1.2 times of the Net Volume of Test Fluid C = 1.2 x 0.36 = $0.432m^3$;

b. Volume of fresh water in Test Fluid C: (947.8g/1000g) of Test Fluid C =0.9478 x 0.432 = $0.4094m^3$;

c. Weight of Test Fluid A: (25g/1000g) of Test Fluid .C. = 25/1000 x 0.432 x 1000 = 10.8kg;

d. Weight of Test Fluid B: (25g/1000g) of Test Fluid C = 25/1000 x 0.432 x 1000 = 10.8kg;

e. Weight of surfactant: (0.5g/1000g) of Test Fluid C = 0.5/1000 x 0.432 x 1000 = 0.216kg; and

f. Weight of iron oxide: (1.7g/1000g) of Test Fluid C) = 1.7/1000 x 0.432 x 1000 x 0.734kg.

§ 162.050–21 [Amended]

■ 29. In § 162.050–21—

■ a. In paragraph (b), add the words ''(incorporated by reference, see § 162.050–4)'' after the words ''(dated April 8, 1976)''; and

■ b. In paragraph (e), remove the text ''twenty-four (24)'' and add, in its place, the figure ''24'', and remove the words ''to be installed in an unattended machinery space''.

■ 30. In § 162.050–23—

■ a. Remove paragraph (a)(2), and redesignate paragraphs (a)(3) through (a)(13) as paragraphs (a)(2) through (a)(12);

■ b. Revise redesignated paragraph (a)(4) to read as set out below;

■ c. In redesignated paragraph (a)(11), remove the text ''one (1)'' and add, in its place, the figure ''1'';

■ d. In redesignated paragraph (a)(12), immediately after the text ''Test No. 5'', remove the letter ''S'' and add, in its place, the letter ''A'';

■ e. Add paragraph (a)(13) to read as follows; and

■ f. Remove paragraphs (b) through (g), and add new paragraphs (b), (c), and (d) to read as follows:

§ 162.050–23 Separator: Approval tests.

(a) * * *

* * * * *

(4) The influent water used in each test must be clean fresh water or clean fresh water in solution with sodium chloride. In either case, the relative density of the water must be no greater than 1.015 at 20 °C.

* * * * *

(13) If a separator has an integral bilge alarm, the separator must be tested with the bilge alarm installed.

* * * * *

(b) The following tests must be conducted using Test Fluid A:

(1) *Test No. 1A.* The separator is filled with water and started. Next, the separator is fed with pure Test Fluid A for at least 5 minutes and then with a mixture of Test Fluid A and water influent containing Test Fluid A content of between 5,000 and 10,000 ppm until

a steady flow rate at a steady, constant ppm occurs. After the flow rate is steady, the influent is fed to the separator for 30 minutes. Samples of separated water effluent are taken after the first 10 and 20 minutes. At the end of the 30-minute period, the air cock on the test rig is opened and, if necessary, the oil and water supply valves are closed to stop the flow of influent. A sample is then taken of the separated water effluent as the effluent flow ceases.

(2) *Test No. 2A*. Repeat Test No. 1A in paragraph (b)(1) of this section using an influent containing approximately 25 percent oil and 75 percent water. Percentage is on a by volume basis.

(3) *Test No. 3A*. The separator is fed with 100 percent Test Fluid A until Fluid A is discharged at the oil discharge outlet of the separator at essentially the same rate that oil is being fed to the separator. The separator is then fed with 100 percent Test Fluid A for 5 additional minutes. If any oily mixture is discharged from the separated water outlet on the separator during the test, that observation is recorded.

(4) *Test No. 4A*. The separator is fed with water for 15 minutes. Samples of the separated water effluent are taken at the beginning of the test and after the first 10 minutes.

(5) *Test No. 5A*. The separator is operated automatically for 3 hours. During the test, the separator is continuously fed with an influent varying from water to a mixture of 25 percent Test Fluid A in water and back to water every 15 minutes. The Test Fluid A concentration in the influent is varied in at least five equal increments during each 15-minute period and the time intervals between the incremental changes are equal. During the last hour, the separator must be inclined at an angle of 22.5° with the plane of its normal operating position. During the last time increment in which the unit is fed a 25 percent Fluid A mixture, a sample of the separated water effluent is taken. If the separator stops at any time during this test, that observation is recorded.

(c) The following tests must be conducted using Test Fluid B:

(1) *Test No. 1B*. Repeat Test No. 1A in paragraph (b)(1) of this section using Test Fluid B; and

(2) *Test No. 2B*. Repeat Test No. 2A in paragraph (b)(2) of this section using Test Fluid B.

(d) The following tests must be conducted using Test Fluid C: *Test No. 1C*. The separator is fed with a mixture composed of 6 percent Test Fluid C and 94 percent water by volume such that the emulsified Test Fluid C content is approximately 3,000 ppm in the test water until a steady flow rate occurs. After the flow rate is steady, the influent containing the 6 percent Test Fluid C solution is fed to the separator operating automatically for 3 hours. Samples of separated water effluent are taken at 50 minutes and 100 minutes. At the end of the 3-hour period, the air cock on the test rig is opened and, if necessary, the oil and water supply valves are closed to stop the flow of influent. A sample is then taken of the separated water effluent as the effluent flow ceases.

§ 162.050–25 [Amended]

■ 31. In § 162.050–25—

■ a. In paragraph (c), add the words ''(incorporated by reference, see § 162.050–4)'' immediately after the words ''(dated April 8, 1976)''.

■ b. In paragraph (g), remove the text ''twenty (20)'' and add, in its place, the figure ''20''.

■ 32. Revise § 162.050–27 to read as follows:

§ 162.050–27 Oil content meter: Approval tests.

This section contains requirements that apply to performing each test.

(a) *Test conditions*. (1) The tests and each step in the tests must be carried out in the order described in this section. Each test must be performed without time delay between steps in the test. No maintenance, including replacement of parts, may be performed on the meter during or between the tests described in this section.

(2) A test rig of the type described in § 162.050–19 must be used when performing each test.

(3) Each mixture used during the tests must be prepared by combining oil supplied from the oil injection pipe of the test rig and water supplied from the mixture tank of the test rig. However, if the flow of oil through the oil injection pipe becomes intermittent, oil and water may be combined in the mixture tank to form the mixture.

(4) A mixture may be circulated through a meter only once during testing.

(5) Unless otherwise provided in a specific test, the water used in each test must be clean, fresh water.

(6) The oil used in each test, except Test No. 2 in paragraph (c) of this section, must be Arabian light crude oil.

(7) Each test must be performed at an ambient temperature of between 10 °C and 30 °C.

(8) Unless otherwise provided in a specific test, each test must be performed at the maximum mixture pressure, the maximum flow rate, and the power supply ratings at which the meter is designed to operate.

(9) The particulate contaminant described in Test No. 5 in paragraph (f) of this section, if not attapulgite, must be of a type that does not lose more than 3 percent of its weight after ignition and must be insoluble in a 500 ppm mixture.

(10) In each test the meter must be operated in accordance with the procedures described in its instructions manual.

(11) Unless otherwise provided in a specific test, the centrifugal pump shown in Figure 162.050–19 in § 162.050–19 must be operated at 1,000 revolutions per minute or more in each test.

(12) Whenever the oil content of a mixture is recorded, a sample of the mixture must also be taken. The oil content of the sample must be measured using the method described in § 162.050–39.

(13) A one-liter sample of each oil to be used in testing must be taken and provided for use in the sample analysis required by § 162.050–39.

(b) *Test No. 1 Calibration and Zero Test*. The meter is calibrated and zeroed to manufacturer's instructions. It is then fed with water for 15 minutes and then with mixtures in the following concentrations: 15 ppm, 50 ppm, 100 ppm, and each additional concentration, in increments of 50 ppm up to the highest oil concentration that can be read on the meter. Each mixture is fed to the meter in the order listed in Table 162.050–27(c) for 15 minutes. Water is fed to the meter for a 15-minute period between each mixture. At the end of each 15-minute period, an oil content reading is obtained and recorded, and a calibration curve must be created.

(c) *Test No. 2 Response to Different Oil Types Test*. (1) If the meter is designed for use with crude oils, it is fed with a mixture of water and the first oil listed in Table 162.050–27(c) at the following concentrations: 15 ppm, 100 ppm, and a concentration that is 90 percent of the highest oil concentration in water that can be read on the meter. Each concentration is fed to the meter in the order listed until a steady reading occurs and is recorded. After each steady reading is recorded, the meter is fed with water for 15 minutes. At the end of each 15-minute period of feeding the meter with water, an oil content reading is again obtained and recorded, and a calibration curve must be created.

(2) The steps described in paragraph (c)(1) of this section are repeated using each of the other oils listed in Table 162.050–27(c). A calibration curve must be created for each oil tested.

TABLE 162.050–27(C)—OIL TYPE AND CHARACTERISTICS

Oil type	Characteristics
Sahara blend crude oil	Density—low. Viscosity—low. Pour point—very low. Producing country—Algeria. General description—mixed base.
Arabian light crude oil	Density—medium. Viscosity—medium. Pour point—low. Producing country—Saudi Arabia. General description—mixed base.
Nigerian medium crude oil	Density—high. Viscosity—medium. Pour point—low. Producing country—Nigeria. General description—naphthenic base.
Bachaquero 17 crude oil	Density—very high. Viscosity—very high. Pour point—low. Producing country—Venezuela. General description—asphaltic base.
Minas crude oil	Density—medium. Viscosity—high. Pour point—very high. Producing country—Indonesia. General description—paraffinic base.
Residual fuel oil	Bunker C or No. 6 Fuel Oil.

(3) If any oil listed in Table 162.050–27(c) is unavailable, an oil with similar properties may be substituted in testing.

(4) If the meter will be used with refined oil products, the steps described in paragraph (c)(1) of this section are performed using each of the following:

(i) Leaded regular grade automotive gasoline;

(ii) Unleaded automotive gasoline;

(iii) Kerosene; and

(iv) Light diesel or No. 2 fuel oil.

(5) If the meter will be used with category C and D oil-like noxious liquid substances to meet the requirements of 33 CFR 151.41(b), the tests described in paragraphs (c) and (d) of this section are to be performed using the substances for which approval is sought.

(d) *Test No. 3 Response Time Test.* (1) The meter is fed with water, zeroed, and then fed with a 100 ppm mixture. The time at which the meter first detects oil in the mixture, the times of reading 63 ppm and 90 ppm, and the time of reaching the highest steady reading of oil content are recorded. The oil content of the mixture at the highest steady reading is also recorded.

(2) The metering pump is turned off and the time at which the highest reading starts to decrease, the times of reading 37 ppm and 10 ppm, and the time of returning to the lowest steady oil content reading are recorded. The oil content of the mixture at the lowest steady reading is also recorded.

(3) The time interval between first detecting oil in the mixture and reading 63 ppm, and the time interval between the first decrease in the highest reading and reading 37 ppm, are averaged and recorded as the response time for the meter.

(e) *Test No. 4 Oil Fouling and Calibration Shift Test.* (1) The meter is fed with water, zeroed, and then fed with a mixture containing 10 percent oil for one minute. The following must be recorded:

(i) Time at which the meter first detects oil;

(ii) Time of reading 15 ppm;

(iii) Time of reading 100 ppm;

(iv) Time of exceeding the highest oil concentration that can be read on the meter;

(v) Time of returning to the highest oil concentration that can be read on the meter;

(vi) Time of returning to a reading of 100 ppm;

(vii) Time of returning to a reading of 15 ppm; and

(viii) Time of returning to the lowest steady oil content reading.

(2) The oil content of the mixture at the lowest steady reading described in paragraph (e)(1)(viii) of this section is recorded.

(3) The meter is fed with water, zeroed, and then fed with oil for 1 minute after which the flow of water is resumed. The times described in paragraph (e)(1) of this section are recorded.

(4) If it is necessary to clean the meter after each oil-fouling test for it to return to a zero reading, this fact and the time required to clean and recalibrate the meter must be noted and recorded in the test report.

(5) The meter is fed with a 100 ppm mixture until a steady oil content reading is obtained and recorded.

(f) *Test No. 5 Contaminant Test.* (1) The meter is fed with a 15 ppm mixture until a steady oil content reading is obtained and recorded.

(2) The meter is fed with a 15 ppm oil mixture of contaminated water consisting of not less than 270 ppm by weight of the clay mineral attapulgite, or similar contaminant that is stable in both fresh and salt water and 30 ppm by weight of iron oxides. The test contaminant should have a particle size distribution with about 30 percent of 10 microns or less and a maximum particle size of 100 microns. The oil content reading, when steady, is recorded.

(3) Each of the two contaminants will be mixed sequentially in the following manner: the mixing of attapulgite shall be for a period of not less than 15 minutes so that a homogeneous suspension is formed; then, iron oxides will be added for an additional period of not less than 10 minutes. The mixing process should maintain the contaminants in suspension throughout the test period.

(4) The test in paragraph (f)(2) of this section is repeated for 100 and 300 ppm oil mixtures in contaminated water.

(g) *Test No. 6 Air Entrainment Test.* (1) The meter is fed with a 15 ppm

mixture until a steady oil content reading is obtained and recorded.

(2) Air is injected into the meter test rig before the sample pump or, in the absence of such pump, immediately before any conditioning unit used to prepare the mixture for measurement. Injection must be by needle having an orifice dimension not exceeding 0.5 mm in diameter arranged in line with the sample flow. The quantity of air injected must be 1 percent of the designated flow rate of the sample pump or conditioning unit at the point of injection.

(3) Air must be delivered to the system by direct injection or pump via a suitable measuring device designed to permit a constant controllable flow rate within ±10 percent of the required rate of injection for an uninterrupted effective test period of not less than 15 minutes.

(4) The oil content reading, when steady, is recorded.

(h) *Test No. 7 Oil Particle Size—Centrifugal Pump Test.* (1) The meter is fed with a 100 ppm mixture until a steady oil content reading is obtained and recorded.

(2) The meter is fed with a 100 ppm mixture that has first passed through the centrifugal pump of the test rig. The pump is run at one-fourth of its design speed. The oil content reading, when steady, is recorded.

(3) The steps described in paragraph (h)(2) of this section are repeated with the pump running at one-half of its design speed and then repeated at its design speed.

(i) *Test No. 8 Temperature Test.* (1) The steps described in paragraph (h)(1) of this section are repeated.

(2) The temperature of the mixture is adjusted to 10 °C and the flow continued until a steady oil content reading is obtained and recorded.

(3) The steps described in paragraph (i)(2) of this section are repeated with the temperature of the mixture at 65 °C or the highest mixture temperature at which the meter is designed to operate, whichever is lower.

(j) *Test No. 9 Sample Pressure or Flow Test.* (1) The steps described in paragraph (h)(1) of this section are repeated.

(2) If the meter has a positive displacement mixture pump, the mixture pressure is lowered to one-half of the meter's maximum design pressure. If the meter has a centrifugal mixture pump, or is not equipped with a mixture pump, the mixture flow rate is reduced to one-half of the meter's design flow rate. The reduced flow rate or mixture pressure is maintained until a steady oil content reading is obtained and recorded.

(3) If the meter has a positive displacement mixture pump, the mixture pressure is increased to twice the meter's design pressure. If the meter has a centrifugal mixture pump or does not have a mixture pump, the mixture flow rate is increased to twice the meter's maximum design flow rate. The increased flow rate or mixture pressure is maintained until a steady oil content reading is obtained and recorded.

(k) *Test No. 10 Shutoff Test.* (1) The steps described in paragraph (h)(1) of this section are repeated.

(2) The water and metering pumps on the test rig are stopped for 8 hours after which the steps described in paragraph (h)(1) of this section are repeated.

(l) *Test No. 11 Supply Voltage Variation Test.* (1) The supply voltage to the meter is increased to 110 percent of its design supply voltage. The meter is then fed a 100 ppm mixture for one hour. At the end of the 1-hour period, an oil content reading is obtained and recorded.

(2) The steps described in paragraph (l)(1) of this section are repeated with the supply voltage to the meter lowered to 90 percent of its design supply voltage.

(3) Upon completing the steps described in paragraph (l)(2) of this section, the supply voltage to the meter is returned to the design rating.

(4) The steps described in paragraphs (l)(1) through (l)(3) of this section are repeated varying each power supply to the meter in the manner prescribed in those steps for supply voltage.

(m) Test *No. 12 Calibration and Zero Drift Test.* (1) The meter is calibrated and zeroed.

(2) The steps described in paragraph (h)(1) of this section are repeated.

(3) A 100 ppm mixture is fed to the meter for 8 hours. At the end of the 8-hour period, an oil content reading is obtained and recorded.

(4) The meter is fed with water until a steady oil content reading is obtained and recorded.

(n) *Test No. 13 Shutdown and Restart Test.* (1) All power to the meter is shutoff for one week. After 1 week the meter is restarted, zeroed, and calibrated.

(2) The meter is fed with a 100 ppm mixture for 1 hour. An oil content reading is then obtained and recorded.

(3) The meter is fed with water for 1 hour. An oil content reading is then obtained and recorded.

(4) The steps described in paragraphs (n)(2) and (n)(3) of this section are repeated three additional times. During the last hour in which the meter is fed with a 100 ppm mixture, the meter is inclined at an angle of 22.5° with the plane of its normal operating position.

§ 162.050–29 [Removed]

■ 33. Remove § 162.050–29.

§ 162.050–31 [Removed]

■ 34. Remove § 162.050–31.

■ 35. In § 162.050–33—

■ a. Revise paragraph (b) to read as set out below;

■ b. In paragraph (c)(1), remove the two ''p.p.m.'' abbreviations, and add, in their places, the letters ''ppm''; and

■ c. Add new paragraphs (d) through (h) to read as follows:

§ 162.050–33 Bilge alarm: Design specification.

* * * * *

(b) Each bilge alarm must be designed to meet the requirements for an oil content meter in § 162.050–25(b) through (f) and 162.050–25(i), and the requirements in this section.

* * * * *

(d) Each bilge alarm must have a ppm display. Emulsions and/or the type of oil must not affect the ppm display. Calibrating the bilge alarm must not be necessary once installed on board the vessel, however, onboard testing in accordance with the manufacturer's operating instructions is permitted for the purposes of checking instrument drift and repeatability of the instrument reading, as well as the ability to re-zero the instrument. The accuracy of the readings must at all times remain within the limits described in paragraph (c)(1) of this section.

(e) Each bilge alarm must be designed so that it displays each change in oil content of the mixture it is measuring within 5 seconds after the change occurs.

(f) Access to the bilge alarm must require the breaking of a seal, except when—

(1) Re-zeroing the instrument;

(2) Checking the instrument drift; or

(3) Checking the repeatability of the instrument reading.

(g) Each bilge alarm must activate its alarm whenever clean water is used for cleaning or zeroing purposes.

(h) The bilge alarm must record date, time, alarm status, and operating status of the 15 ppm bilge separator. The recording device must also store data for at least 18 months and be able to display or print a protocol. In the event the 15 ppm bilge alarm is replaced, means must be provided to ensure the data recorded remains available on board for 18 months.

■ 36. Revise § 162.050–35 to read as follows:

§ 162.050–35 Bilge alarm: Approval tests.

This section contains requirements that apply to bilge alarms.

(a) *Test Conditions.* (1) Each test must be conducted under the conditions prescribed for meters in § 162.050–27(a)(1) through (a)(5), (a)(7), (a)(8), (a)(10), (a)(11), and (a)(13).

(2) The tests in this section must be performed using test fluids described in § 162.050–20.

(3) The oil content of each sample must be measured using the method described in § 162.050–39.

(b) *Test No. 1A Calibration and Zero Test.* (1) The bilge alarm is calibrated and zeroed to manufacturer's instructions.

(2) It is then fed with water for 15 minutes and then with a mixture of Test Fluid A and water in the following concentrations: 0 ppm, 15 ppm, and the highest oil concentration that can be read on the monitor. A sample of the mixture causing actuation of the alarm is taken. The alarm is then fed with water for 15 minutes.

(3) Repeat steps in paragraphs (b)(2) of this section first using Test Fluid B and then again with Test Fluid C. Collect samples as required in the test for each run of Test Fluid B and Test Fluid C.

(4) If the bilge alarm must be calibrated and re-zeroed between test fluids, this must be noted in the test report.

(c) *Test No. 2A Contaminant Test.* (1) The bilge alarm is fed for 5 minutes with a 10 ppm mixture of Test Fluid B and water. At the end of the 5-minute period an oil content reading is obtained and recorded.

(2) The bilge alarm is then fed for 5 minutes with a 10 ppm mixture of Test Fluid B and water contaminated with a 10 ppm concentration of iron oxide. Any change in the bilge alarm reading during the 5 minutes is recorded.

(3) Repeat steps in paragraphs (c)(1) and (2) of this section using iron oxide concentrations of 50 ppm and 100 ppm.

(4) The bilge alarm is then fed for 5 minutes with a 10 ppm mixture of Test Fluid B and water. At the end of the 5-minute period an oil content reading is obtained and recorded.

(5) The bilge alarm is fed for 5 minutes with a 10 ppm mixture of Test Fluid B and fresh water with 6 percent sodium chloride. Any change in the bilge alarm reading is recorded.

(d) *Test No. 3A Sample Pressure or Flow Test.* (1) The bilge alarm is fed with a mixture of Test Fluid B and water and the test fluid content of the mixture is increased until the bilge alarm actuates. The ppm display is recorded and a sample of the mixture causing actuation of the alarm is taken.

(2) If the alarm has a positive displacement mixture pump, the mixture pressure is reduced to one-half of the alarm's maximum design pressure. If the alarm has a centrifugal mixture pump or is not equipped with a mixture pump, the mixture flow rate is reduced to one-half of the alarm's maximum design flow rate. After reduction of pressure or flow rate, the oil content in the mixture is increased until the alarm actuates. The ppm display is recorded and a sample of the mixture causing actuation of the alarm is taken.

(3) If the alarm has a positive displacement mixture pump, the influent pressure is increased to twice the alarm's minimum design pressure. If the alarm has a centrifugal mixture pump or if the alarm is not equipped with a mixture pump, the influent flow rate is increased to twice the alarm's maximum design flow rate. After increasing the pressure or flow rate, the oil content in the mixture is increased until the alarm actuates. The ppm display is recorded and a sample of the mixture causing actuation is taken.

(e) *Test No. 4A Shutoff Test.* (1) The steps described in paragraph (d)(1) of this section are repeated.

(2) The metering and water pumps of the test rig are stopped for 8 hours with the bilge alarm left turned on with no other changes made.

(3) The metering and water pumps are started and the Test Fluid B content of the mixture is increased until the bilge alarm actuates. A sample of the mixture causing actuation is taken. The bilge alarm ppm display readings before and after the 8-hour period will be recorded.

(f) *Test No. 5A Supply Voltage Variation Test.* (1) The supply voltage to the bilge alarm is raised to 110 percent of its design supply voltage. The bilge alarm is fed with a mixture of Test Fluid B and water and the test fluid content of the mixture is increased until the bilge alarm actuates. The ppm display is recorded and a sample of the mixture causing actuation is taken.

(2) The supply voltage to the alarm is lowered to 90 percent of its design supply voltage. The bilge alarm is fed with a mixture of Test Fluid B and water and the test fluid content of the mixture is increased until the bilge alarm actuates. The ppm display is recorded and a sample of the mixture causing actuation is taken.

(3) Upon completion of the steps described in paragraph (f)(2) of this section, the supply voltage to the alarm is returned to its design value.

(4) The steps described in paragraphs (f)(1) through (f)(3) of this section are repeated varying each other power supply to the alarm in the manner prescribed in those steps for supply voltage.

(g) *Test No. 6A Calibration and Zero Drift Test.* (1) The steps described in paragraph (b)(1) of this section are repeated and then the steps in paragraph (d)(1) of this section are repeated.

(2) The bilge alarm is fed with a 15 ppm mixture of Test Fluid B and water for eight hours and any calibration drift is recorded. Samples of the mixture must be taken at the beginning of the test and at 2-hour intervals until the completion of the 8-hour period.

(3) Following the steps in paragraph (g)(2) of this section, the bilge alarm must be run on clean, oil-free water only and any zero drift must be recorded.

(h) *Test No. 7A Response Time Test.* (1) The bilge alarm is fed with a 40 ppm mixture of Test Fluid B and water until the bilge alarm actuates. The time of turning on the metering pump of the test rig and the time of alarm actuation are recorded. The flow rate on the flow meter of the test rig is also recorded.

(i) *Test No. 8A Shutdown and Restart Test.* (1) All power to the bilge alarm is shutoff for 1 week. After 1 week the alarm is then restarted, zeroed, and calibrated.

(2) The steps described in paragraph (d)(1) of this section are repeated. Water is then fed to the bilge alarm for 1 hour.

(3) The steps described in paragraph (i)(2) of this section are repeated seven additional times. During the last hour, the alarm must be inclined at an angle of 22.5° with the plane of its normal operating position.

■ 37. In § 162.050–37—

■ a. Revise paragraph (b) to read as set out below; and

■ b. Add paragraph (c) to read as follows:

§ 162.050–37 Vibration test.

* * * * *

(b)(1) Each oil content meter and bilge alarm and each control of a separator must be subjected to continuous sinusoidal vibration in each of the following directions for a 2 hour period in each direction:

(i) Vertically up and down;

(ii) Horizontally from side to side; and

(iii) Horizontally from end to end.

(2) The vibrating frequency must be 80 Hz, except that the vibrating frequency of equipment that has a resonant frequency between 2 Hz and 80 Hz must be the resonant frequency. If the vibrating frequency is between 2 Hz and 13.2 Hz, the displacement amplitude must be ±1 mm. If the vibrating frequency is between 13.2 Hz

and 80 Hz, the acceleration amplitude must be ± [(.7)(gravity)].

(c) After completion of the tests specified in paragraph (b) of this section, a search must again be made for resonance and any significant change in the vibration pattern must be noted in the test report.

■ 38. Revise § 162.050–39 to read as follows:

§ 162.050–39 Measurement of oil content.

The collection and testing of all samples of oil in water from the required test will be accomplished in accordance with ISO 9377–2 (2000), Water Quality—Determination of hydrocarbon oil index-Part 2: Method Using solvent extraction and Gas Chromatography (incorporated by reference, see § 162.050–4).

Dated: January 12, 2009.

Brian M. Salerno,

Rear Admiral, U.S. Coast Guard, Assistant Commandant for Marine Safety, Security & Stewardship.

[FR Doc. E9–802 Filed 1–15–09; 8:45 am]

BILLING CODE 4910–15–P